Panasonic

Order No. TD831159-11CE

TECHNICAL DATA

2WAY VRF SYSTEM

R410A

Model No.
Outdoor Unit

	Class	8HP	10HP	12HP	14HP	16HP	18HP	20HP
ME1	Model Name	U-8ME1E81	U-10ME1E81	U-12ME1E81	U-14ME1E81	U-16ME1E81	U-18ME1E81	U-20ME1E81

Indoor Unit

	Class	15	22	28	36	45	56	60	73	90	106	140	160
U1	4-Way Cassette		S-22MU1E51 S-22MU1E5	S-28MU1E51 S-28MU1E5	S-36MU1E51 S-36MU1E5	S-45MU1E51 S-45MU1E5	S-56MU1E51 S-56MU1E5	S-60MU1E51	S-73MU1E51 S-73MU1E5	S-90MU1E51	S-106MU1E51 S-106MU1E5	S-140MU1E51 S-140MU1E5	S-160MU1E51 S-160MU1E5
Y1	4-Way Cassette 60×60		S-22MY1E5	S-28MY1E5	S-36MY1E5	S-45MY1E5	S-56MY1E5						
Y2	4-Way Cassette 60×60		S-22MY2E5	S-28MY2E5	S-36MY2E5	S-45MY2E5	S-56MY2E5						
L1	2-Way Cassette		S-22ML1E5	S-28ML1E5	S-36ML1E5	S-45ML1E5	S-56ML1E5		S-73ML1E5				
D1	1-Way Cassette			S-28MD1E5	S-36MD1E5	S-45MD1E5	S-56MD1E5		S-73MD1E5				
F1	Low Silhouette Ducted		S-22MF1E5	S-28MF1E5	S-36MF1E5	S-45MF1E5	S-56MF1E5		S-73MF1E5	S-90MF1E5	S-106MF1E5	S-140MF1E5	S-160MF1E5
F2	Low Silhouette Ducted		S-22MF2E5	S-28MF2E5	S-36MF2E5	S-45MF2E5	S-56MF2E5	S-60MF2E5	S-73MF2E5	S-90MF2E5	S-106MF2E5	S-140MF2E5	S-160MF2E5
M1	Slim Low Static Ducted	S-15MM1E5	S-22MM1E5	S-28MM1E5	S-36MM1E5	S-45MM1E5	S-56MM1E5						
T1	Ceiling				S-36MT1E5	S-45MT1E5	S-56MT1E5		S-73MT1E5		S-106MT1E5	S-140MT1E5	
K1	Wall Mounted		S-22MK1E5	S-28MK1E5	S-36MK1E5	S-45MK1E5	S-56MK1E5		S-73MK1E5		S-106MK1E5		
K2	Wall Mounted		S-22MK2E5	S-28MK2E5	S-36MK2E5								
R1	Concealed Floor Standing		S-22MR1E5	S-28MR1E5	S-36MR1E5	S-45MR1E5	S-56MR1E5		S-71MR1E5				
P1	Floor Standing		S-22MP1E5	S-28MP1E5	S-36MP1E5	S-45MP1E5	S-56MP1E5		S-71MP1E5				

	Class	73	106	140	224	280
E1	High Static Pressure Ducted	S-73ME1E5	S-106ME1E5	S-140ME1E5	S-224ME1E5 S-224ME1E5A	S-280ME1E5

IMPORTANT!
Please Read Before Starting

This air conditioning system meets strict safety and operating standards. As the installer or service person, it is an important part of your job to install or service the system so it operates safely and efficiently.

For safe installation and trouble-free operation, you must:

- Carefully read this instruction booklet before beginning.
- Follow each installation or repair step exactly as shown.
- Observe all local, state, and national electrical codes.
- This product is intended for professional use. Permission from the power supplier is required when installing the U-8ME1E81 outdoor unit that is connected to a 16 A distribution network.
- This equipment complies with EN/IEC 61000-3-12 provided that the short-circuit power Ssc is greater than or equals to the values corresponding to each model as shown in the table below at the interface point between the user's supply and the public system.
  It is the responsibility of the installer or user of the equipment to ensure; by consultation with the distribution network operator if necessary that the equipment is connected only to supply with a short-circuit power Ssc greater than or equals to the values corresponding to each model as shown in the table below.

	U-10ME1E81	U-12ME1E81	U-14ME1E81	U-16ME1E81	U-18ME1E81	U-20ME1E81
Ssc	1,150 kVA	1,550 kVA	1,550 kVA	1,550 kVA	1,550 kVA	1,550 kVA

- This equipment complies with EN/IEC 61000-3-11 provided that the system impedance Zmax is less than or equal to the values corresponding to each model as shown in the table below at the interface point between the user's supply and the public system. Consult with the supply authority for the system impedance Zmax.

	U-10ME1E81	U-12ME1E81	U-14ME1E81	U-16ME1E81	U-18ME1E81	U-20ME1E81
Zmax	—	0.290 Ω	0.290 Ω	0.290 Ω	0.290 Ω	0.290 Ω

- Pay close attention to all warning and caution notices given in this manual.

WARNING This symbol refers to a hazard or unsafe practice which can result in severe personal injury or death.

CAUTION This symbol refers to a hazard or unsafe practice which can result in personal injury or product or property damage.

If Necessary, Get Help

These instructions are all you need for most installation sites and maintenance conditions. If you require help for a special problem, contact our sales/service outlet or your certified dealer for additional instructions.

In Case of Improper Installation

The manufacturer shall in no way be responsible for improper installation or maintenance service, including failure to follow the instructions in this document.

SPECIAL PRECAUTIONS

WARNING When Wiring

ELECTRICAL SHOCK CAN CAUSE SEVERE PERSONAL INJURY OR DEATH. ONLY A QUALIFIED, EXPERIENCED ELECTRICIAN SHOULD ATTEMPT TO WIRE THIS SYSTEM.

- Do not supply power to the unit until all wiring and tubing are completed or reconnected and checked.
- Highly dangerous electrical voltages are used in this system. Carefully refer to the wiring diagram and these instructions when wiring. Improper connections and inadequate grounding can cause **accidental injury or death.**
- Connect all wiring tightly. Loose wiring may cause overheating at connection points and a possible fire hazard.
- Provide a power outlet to be used exclusively for each unit.
- ELCB must be incorporated in the fixed wiring.
  Circuit breaker must be incorporated in the fixed wiring in accordance with the wiring regulations.

	U-8ME1E81	U-10ME1E81	U-12ME1E81	U-14ME1E81
Circuit breaker	25 A	25 A	35 A	35 A

	U-16ME1E81	U-18ME1E81	U-20ME1E81
Circuit breaker	45 A	50 A	50 A

- Provide a power outlet exclusively for each unit, and full disconnection means having a contact separation in all poles must be incorporated in the fixed wiring in accordance with the wiring rules.
- To prevent possible hazards from insulation failure, the unit must be grounded.

When Transporting

Be careful when picking up and moving the indoor and outdoor units. Get a partner to help, and bend your knees when lifting to reduce strain on your back. Sharp edges or thin aluminum fins on the air conditioner can cut your fingers.

When Installing…

Select an installation location which is rigid and strong enough to sup port or hold the unit, and select a location for easy maintenance.

…In a Room

Properly insulate any tubing run inside a room to prevent "sweating" that can cause dripping and water damage to walls and floors.

CAUTION Keep the fire alarm and the air outlet at least 1.5 m away from the unit.

…In Moist or Uneven Locations

Use a raised concrete pad or concrete blocks to provide a solid, level foundation for the outdoor unit. This prevents water damage and abnormal vibration.

…In an Area with High Winds
Securely anchor the outdoor unit down with bolts and a metal frame. Provide a suitable air baffle.

…In a Snowy Area (for Heat Pump-type Systems)
Install the outdoor unit on a raised platform that is higher than drifting snow. Provide snow vents.

When Connecting Refrigerant Tubing

WARNING

- When performing piping work do not mix air except for specified refrigerant (R410A) in refrigeration cycle. It causes capacity down, and risk of explosion and injury due to high tension inside the refrigerant cycle.
- Refrigerant gas leakage may cause fire.
- Do not add or replace refrigerant other than specified type. It may cause product damage, burst and injury, etc.

- Ventilate the room well, in the event that is refrigerant gas leaks during the installation. Be careful not to allow contact of the refrigerant gas with a flame as this will cause the generation of poisonous gas.
- Keep all tubing runs as short as possible.
- Use the flare method for connecting tubing.
- Apply refrigerant lubricant to the matching surfaces of the flare and union tubes before connecting them, then tighten the nut with a torque wrench for a leak-free connection.
- Check carefully for leaks before starting the test run.
- Do not leak refrigerant while piping work for an installation or re-installation, and while repairing refrigeration parts.
  Handle liquid refrigerant carefully as it may cause frostbite.

When Servicing

- Turn the power OFF at the main power box (mains), wait at least 10 minutes until it is discharged, then open the unit to check or repair electrical parts and wiring.
- Keep your fingers and clothing away from any moving parts.
- Clean up the site after you finish, remembering to check that no metal scraps or bits of wiring have been left inside the unit being serviced.

WARNING

- This product must not be modified or disassembled under any circumstances. Modified or disassembled unit may cause fire, electric shock or injury.
- Do not clean inside the indoor and outdoor units by users. Engage authorized dealer or specialist for cleaning.
- In case of malfunction of this appliance, do not repair by yourself. Contact to the sales dealer or service dealer for a repair.

CAUTION

- Do not touch the air inlet or the sharp aluminum fins of the outdoor unit. You may get injured.
- Ventilate any enclosed areas when installing or testing the refrigeration system. Escaped refrigerant gas, on contact with fire or heat, can produce dangerously toxic gas.
- Confirm after installation that no refrigerant gas is leaking. If the gas comes in contact with a burning stove, gas water heater, electric room heater or other heat source, it can cause the generation of poisonous gas.

Others

CAUTION

- Do not touch the air inlet or the sharp aluminum fins of the outdoor unit. You may get injured.
- Do not sit or step on the unit, you may fall down accidentally.
- Do not stick any object into the FAN CASE.
  You may be injured and the unit may be damaged.

Check of Density Limit

The room in which the air conditioner is to be installed requires a design that in the event of refrigerant gas leaking out, its density will not exceed a set limit.

The refrigerant (R410A), which is used in the air conditioner, is safe, without the toxicity or combustibility of ammonia, and is not restricted by laws imposed to protect the ozone layer. However, since it contains more than air, it poses the risk of suffocation if its density should rise excessively. Suffocation from leakage of refrigerant is almost non-existent. With the recent increase in the number of high density buildings, however, the installation of multi air conditioner systems is on the increase because of the need for effective use of floor space, individual control, energy conservation by curtailing heat and carrying power, etc.
Most importantly, the multi air conditioner system is able to replenish a large amount of refrigerant compared to conventional individual air conditioners. If a single unit of the multi air conditioner system is to be installed in a small room, select a suitable model and installation procedure so that if the refrigerant accidentally leaks out, its density does not reach the limit (and in the event of an emergency, measures can be made before injury can occur).
In a room where the density may exceed the limit, create an opening with adjacent rooms, or install mechanical ventilation combined with a gas leak detection device. The density is as given below.

$$\frac{\textbf{Total amount of refrigerant (kg)}}{\textbf{Min. volume of the indoor unit installed room (m}^3\textbf{)}} \leq \textbf{Density limit (kg/m}^3\textbf{)}$$

The density limit of refrigerant which is used in multi air conditioners is 0.3 kg/m^3 (ISO 5149).

NOTE

1. If there are 2 or more refrigerating systems in a single refrigerating device, the amount of refrigerant should be as charged in each independent device.

   For the amount of charge in this example:

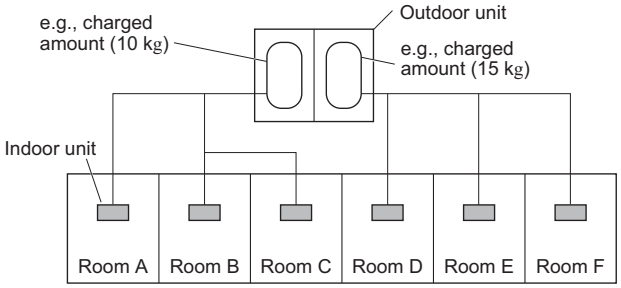

   The possible amount of leaked refrigerant gas in rooms A, B and C is 10 kg.
   The possible amount of leaked refrigerant gas in rooms D, E and F is 15 kg.

2. The standards for minimum room volume are as follows.

(1) No partition (shaded portion)

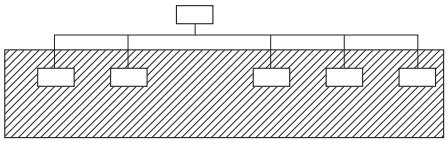

(2) When there is an effective opening with the adjacent room for ventilation of leaking refrigerant gas (opening without a door, or an opening 0.15% or larger than the respective floor spaces at the top or bottom of the door).

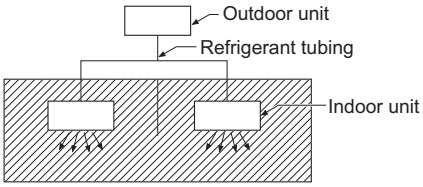

(3) If an indoor unit is installed in each partitioned room and the refrigerant tubing is interconnected, the smallest room of course becomes the object. But when mechanical ventilation is installed interlocked with a gas leakage detector in the smallest room where the density limit is exceeded, the volume of the next smallest room becomes the object.

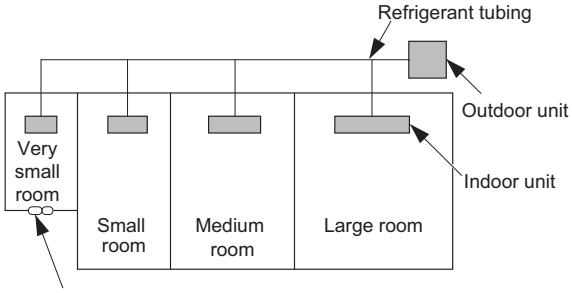

3. The minimum indoor floor space compared with the amount of refrigerant is roughly as follows: (When the ceiling is 2.7 m high)

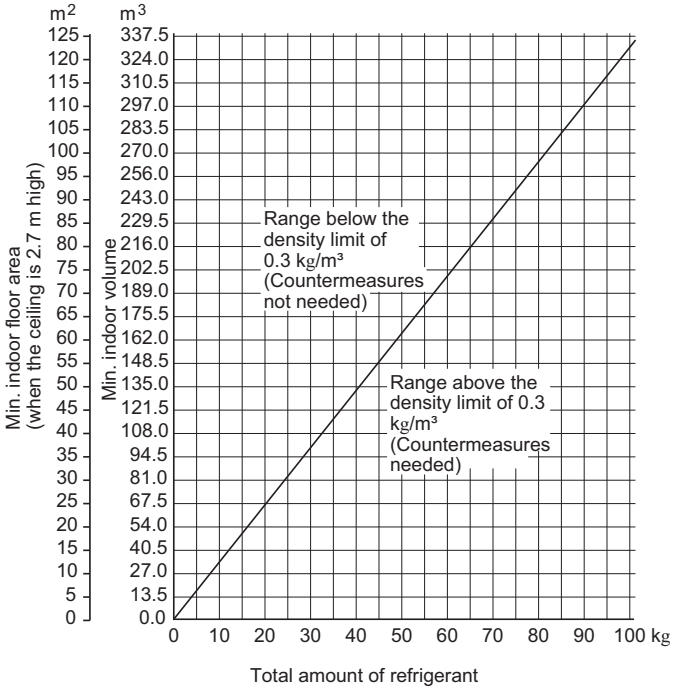

Precautions for Installation Using New Refrigerant

1. Care regarding tubing

1-1. Process tubing

- Material: Use C1220 phosphorous deoxidized copper specified in JIS H3300 “Copper and Copper Alloy Seamless Pipes and Tubes.” For tubes of ø22.22 or larger, use C1220 T-1/2H material or H material, and do not bend the tubes.
- **Tubing size: Be sure to use the sizes indicated in the table below.**
- Use a tube cutter when cutting the tubing, and be sure to remove any flash. This also applies to distribution joints (optional).
- When bending tubing, use a bending radius that is 4 times the outer diameter of the tubing or larger.

CAUTION **Use sufficient care in handling the tubing. Seal the tubing ends with caps or tape to prevent dirt, moisture, or other foreign substances from entering. These substances can result in system malfunction.**

Unit: mm

Material		O				
Copper tube	Outer diameter	6.35	9.52	12.7	15.88	19.05
	Wall thickness	0.8	0.8	0.8	1.0	1.2

Unit: mm

Material		1/2 H, H					
Copper tube	Outer diameter	22.22	25.4	28.58	31.75	38.1	41.28
	Wall thickness	1.0	1.0	1.0	1.1	over 1.35	over 1.45

1-2. Prevent impurities including water, dust and oxide from entering the tubing. Impurities can cause R410A refrigerant deterioration and compressor defects. Due to the features of the refrigerant and refrigerating machine oil, the prevention of water and other impurities becomes more important than ever.

2. Be sure to recharge the refrigerant only in liquid form.

2-1. Since R410A is a non-azeotrope, recharging the refrigerant in gas form can lower performance and cause defects in the unit.

2-2. Since refrigerant composition changes and performance decreases when gas leaks, collect the remaining refrigerant and recharge the required total amount of new refrigerant after fixing the leak.

3. Different tools required

3-1. Tool specifications have been changed due to the characteristics of R410A.

Some tools for R22- and R407C-type refrigerant systems cannot be used.

Item	New tool?	R407C tools compatible with R410A?	Remarks
Manifold gauge	Yes	No	Types of refrigerant, refrigerating machine oil, and pressure gauge are different.
Charge hose	Yes	No	To resist higher pressure, material must be changed.
Vacuum pump	Yes	Yes	Use a conventional vacuum pump if it is equipped with a check valve. If it has no check valve, purchase and attach a vacuum pump adapter.
Leak detector	Yes	No	Leak detectors for CFC and HCFC that react to chlorine do not function because R410A contains no chlorine. Leak detectors for HFC134a can be used for R410A.
Flaring oil	Yes	No	For systems that use R22, apply mineral oil (Suniso oil) to the flare nuts on the tubing to prevent refrigerant leakage. For machines that use R407C or R410A, apply synthetic oil (ether oil) to the flare nuts.

Manifold gauge

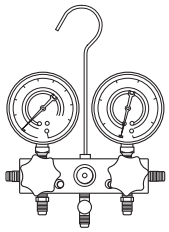

Vacuum pump

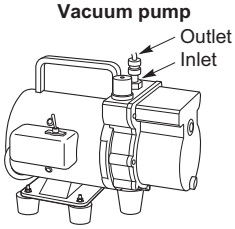

* Using tools for R22 and R407C and new tools for R410A together can cause defects.

3-2. Use R410A exclusive cylinder only.

Single-outlet valve
(with siphon tube)
Liquid refrigerant should be recharged with the cylinder standing on end as shown.

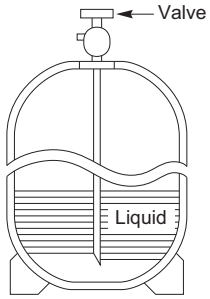

Contents

Section 1: OUTLINE OF 2WAY SYSTEM 1-1
1. Line-up 1-2
2. Features of 2WAY SYSTEM 1-6
3. MARKINGS FOR DIRECTIVE 97/23/EC (PED) 1-10

Section 2: DESIGN OF 2WAY SYSTEM 2-1
1. Model Selecting and Capacity Calculator 2-2
2. System Design 2-20
3. Electrical Wiring 2-26
4. Installation Instructions 2-35
5. HOW TO PROCESS TUBING 2-148
6. AIR PURGING 2-152
7. Optional Parts 2-155
8. How to select AHU system 2-173

Section 3: Control of 2WAY SYSTEM 3-1
1. Main Operating Functions 3-4
2. Wireless Remote Controller 3-6
3. Timer Remote Controller 3-35
4. Simplified Remote Controller 3-54
5. System Controller 3-67
6. Schedule Timer 3-89
7. ON/OFF Controller (CZ-ANC2) 3-114
8. Intelligent Controller (CZ-256ESMC2) 3-132
9. Communication Adaptor (CZ-CFUNC2) 3-193
10. Remote Sensor 3-201
11. LonWorks Interface (CZ-CLNC2) 3-204
12. Seri-Para I/O unit for outdoor unit (CZ-CAPDC2) 3-219
13. Seri-para I/O Unit for each indoor unit (CZ-CAPBC2) 3-234
14. Interface Adaptor (CZ-CAPC2) 3-242
15. Web Interface (CZ-CWEBC2) 3-249
16. Intelligent Management System 3-305

Section 4: 2WAY SYSTEM UNIT SPECIFICATIONS 4-1
1. Outdoor Unit 4-4
2. 4-Way Cassette Type (U1 Type) 4-43
3. Low Silhouette Ducted Type (F2 Type) 4-66
4. 4-Way Cassette 60×60 Type (Y2 Type) 4-88
5. Wall Mounted Type (K2 Type) 4-99
6. High Static Pressure Ducted Type (E1 Type) 4-106
7. 4-Way Cassette Type (U1 Type) 4-112
8. 4-Way Cassette 60×60 Type (Y1 Type) 4-138
9. 2-Way Cassette Type (L1 Type) 4-152
10. Wall Mounted Type (K1 Type) 4-168
11. Ceiling Type (T1 Type) 4-189
12. Low Silhouette Ducted Type (F1 Type) 4-206
13. High Static Pressure Ducted Type (E1 Type) 4-233
14. Floor Standing Type (P1 Type) 4-250
15. Concealed Floor Standing Type (R1 Type) 4-265
16. 1-Way Cassette Type (D1 Type) 4-281
17. Slim Low Static Ducted Type (M1 Type) 4-294
18. Intaking Fresh Air of 4-Way Cassette Type and Slim Low Static Ducted Type .. 4-309

Section 5: TEST RUN 5-1
1. Preparing for Test Run 5-2
2. Test Run Procedure 5-3
3. Main Outdoor Unit PCB Setting 5-4
4. Auto Address Setting 5-7
5. Remote Controller Test Run Settings 5-13
6. Caution for Pump Down 5-14
7. Meaning of Alarm Messages 5-15

Section 6: ELECTRICAL DATA 6-1
1. Outdoor Unit 6-2
2. Indoor Unit 6-8

Section 7: PCB AND FUNCTIONS 7-1
1. Outdoor Unit Control PCB 7-2
2. Indoor Unit Control PCB Switches and Functions 7-8

Section 8: RENEWAL 8-1
1. Precautions on Renewal Design & Installation 8-2
2. Reference 8-10
3. INSTALLATION INSTRUCTIONS (VRF Renewal Kit) 8-12

Section 9: CAPACITY TABLE 9-1
1. Capacity Ratio of Outdoor Unit (Standard-COP mode) 9-2
2. Capacity Ratio of Outdoor Unit (High-COP mode) 9-44
3. Cooling Capacity of Indoor Unit 9-68

– MEMO –

Contents

1. OUTLINE OF 2WAY SYSTEM

1. Line-up..... 1-2
2. Features of 2WAY SYSTEM..... 1-6
2-1. Outline of 2WAY SYSTEM 1-6
3. MARKINGS FOR DIRECTIVE 97/23/EC (PED)..... 1-10

1. Line-up

Indoor units

Type	22	28	36	45	56	60	73	90	106	140	160
Capacity: kW (BTU/h) Cooling / Heating	2.2 (7,500) / 2.5 (8,500)	2.8 (9,600) / 3.2 (11,000)	3.6 (12,000) / 4.2 (14,000)	4.5 (15,000) / 5.0 (17,000)	5.6 (19,000) / 6.3 (21,000)	6.0 (20,500) / 7.1 (24,200)	7.3 (25,000) / 8.0 (27,000)	9.0 (30,000) / 10.0 (34,000)	10.6 (36,000) / 11.4 (39,000)	14.0 (47,800) / 16.0 (54,600)	16.0 (54,600) / 18.0 (61,500)
4-Way Cassette Type (U1 Type)	S-22MU1E51 S-22MU1E5	S-28MU1E51 S-28MU1E5	S-36MU1E51 S-36MU1E5	S-45MU1E51 S-45MU1E5	S-56MU1E51 S-56MU1E5	S-60MU1E51	S-73MU1E51 S-73MU1E5	S-90MU1E51	S-106MU1E51 S-106MU1E5	S-140MU1E51 S-140MU1E5	S-160MU1E51 S-160MU1E5
4-Way Cassette 60×60 Type (Y1 Type)	S-22MY1E5	S-28MY1E5	S-36MY1E5	S-45MY1E5	S-56MY1E5						
4-Way Cassette 60×60 Type (Y2 Type)	S-22MY2E5	S-28MY2E5	S-36MY2E5	S-45MY2E5	S-56MY2E5						
2-Way Cassette Type (L1 Type)	S-22ML1E5	S-28ML1E5	S-36ML1E5	S-45ML1E5	S-56ML1E5		S-73ML1E5				
Wall Mounted Type (K1 Type)	S-22MK1E5	S-28MK1E5	S-36MK1E5	S-45MK1E5	S-56MK1E5		S-73MK1E5		S-106MK1E5		
Wall Mounted Type (K2 Type)	S-22MK2E5	S-28MK2E5	S-36MK2E5								
Ceiling Type (T1 Type)			S-36MT1E5	S-45MT1E5	S-56MT1E5		S-73MT1E5		S-106MT1E5	S-140MT1E5	
1-Way Cassette Type (D1 Type)		S-28MD1E5	S-36MD1E5	S-45MD1E5	S-56MD1E5		S-73MD1E5				
Low Silhouette Ducted Type (F1 Type)	S-22MF1E5	S-28MF1E5	S-36MF1E5	S-45MF1E5	S-56MF1E5		S-73MF1E5	S-90MF1E5	S-106MF1E5	S-140MF1E5	S-160MF1E5
Low Silhouette Ducted Type (F2 Type)	S-22MF2E5	S-28MF2E5	S-36MF2E5	S-45MF2E5	S-56MF2E5	S-60MF2E5	S-73MF2E5	S-90MF2E5	S-106MF2E5	S-140MF2E5	S-160MF2E5
Slim Low Static Ducted Type (M1 Type)	S-22MM1E5	S-28MM1E5	S-36MM1E5	S-45MM1E5	S-56MM1E5						
Floor Standing Type (P1 Type)	S-22MP1E5	S-28MP1E5	S-36MP1E5	S-45MP1E5	S-56MP1E5		S-71MP1E5				
Concealed Floor Standing Type (R1 Type)	S-22MR1E5	S-28MR1E5	S-36MR1E5	S-45MR1E5	S-56MR1E5		S-71MR1E5				

Type	73	106	140	224	280
High Static Pressure Ducted Type (E1 Type)	S-73ME1E5	S-106ME1E5	S-140ME1E5	S-224ME1E5 S-224ME1E5A	S-280ME1E5

1. Line-up

Outdoor units

Model	U-8ME1E81	U-10ME1E81	U-12ME1E81
Capacity: kW (BTU/h) Cooling / Heating	22.4 (76,500)/ 25.0 (85,300)	28.0 (95,600)/ 31.5 (107,500)	33.5 (114,300)/ 37.5 (128,000)

unit: mm

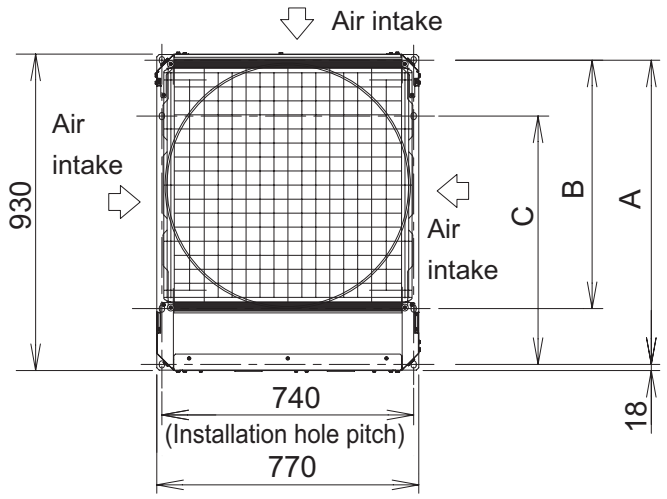

Top view

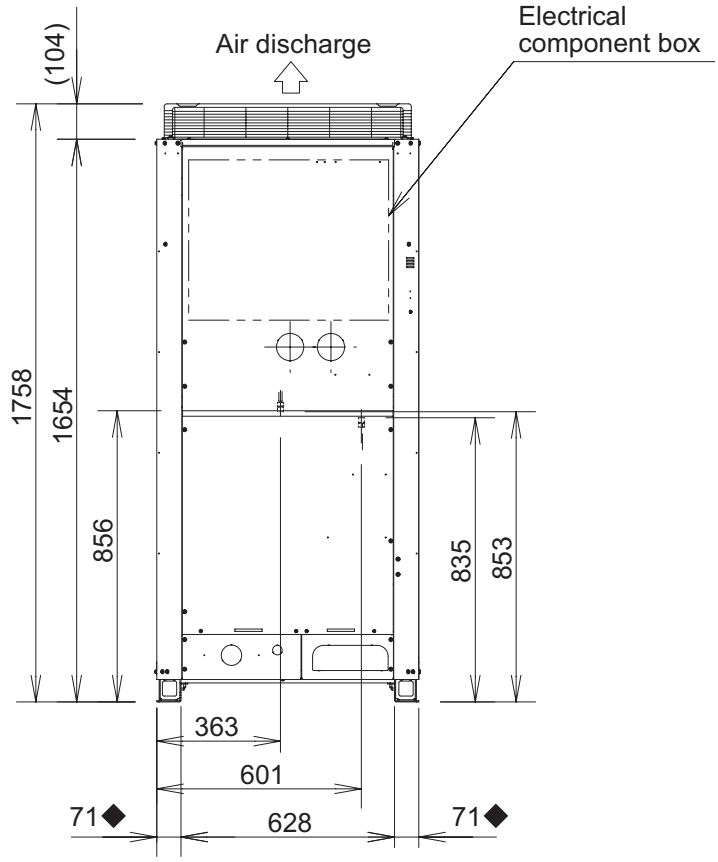

Front view

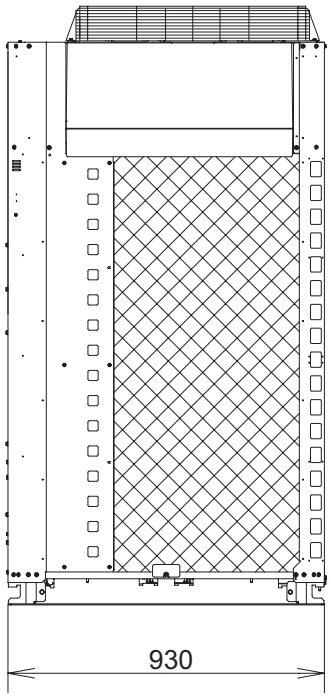

Side view

◆ Installation fixing bracket
Installation side

According to the installation site, you may choose the setting position in the depth direction of the anchor bolt from "A", "B" or "C".

A : 894 (Installation hole pitch) * The tubing is routed out from the front.
B : 730 (Installation hole pitch) * The tubing is routed out from the bottom.
C : 730 (Installation hole pitch)

1. Line-up

Outdoor units

Model	U-14ME1E81	U-16ME1E81
Capacity: kW (BTU/h) Cooling / Heating	40.0 (136,500)/ 45.0 (153,600)	45.0 (153,600)/ 50.0 (170,600)

unit: mm

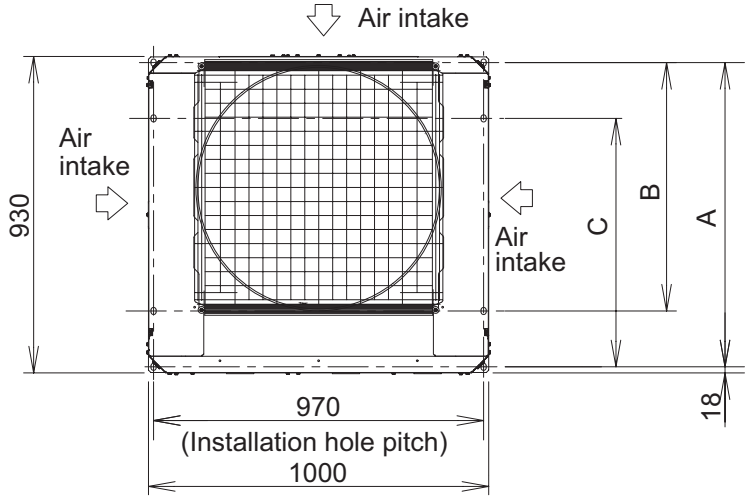

Top view

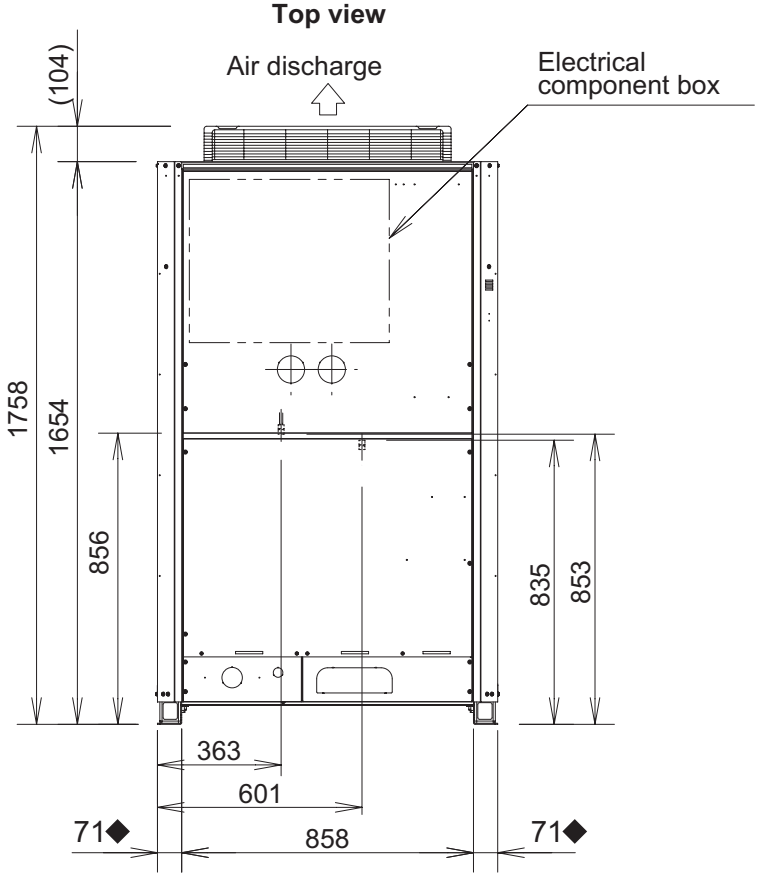

Front view

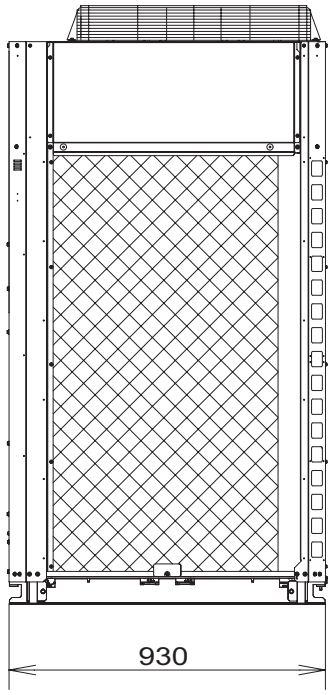

Side view

◆ Installation fixing bracket Installation side

・According to the installation site, you may choose the setting position in the depth direction of the anchor bolt from "A", "B" or "C".

A : 894 (Installation hole pitch) * The tubing is routed out from the front.
B : 730 (Installation hole pitch) * The tubing is routed out from the bottom.
C : 730 (Installation hole pitch)

1. Line-up

Outdoor units

Model	U-18ME1E81	U-20ME1E81
Capacity: kW (BTU/h) Cooling / Heating	50.0 (170,600)/ 56.0 (191,100)	56.0 (191,100)/ 63.0 (215,000)

unit: mm

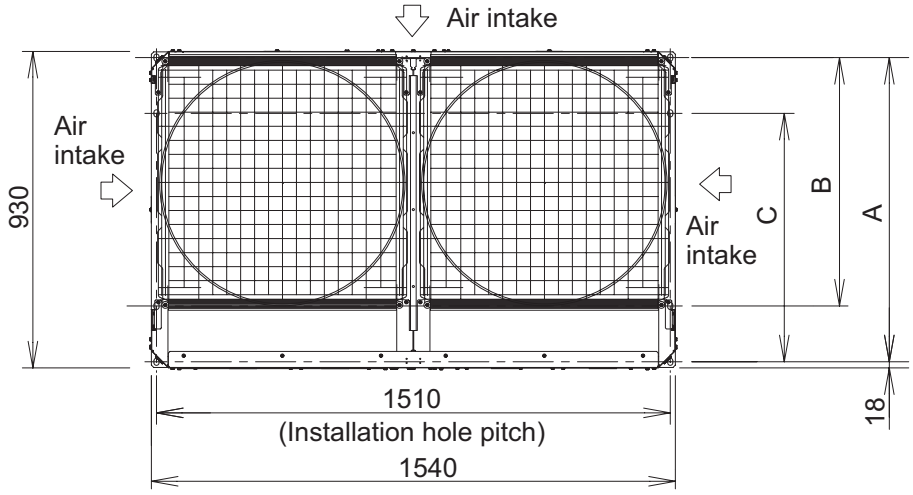

Top view

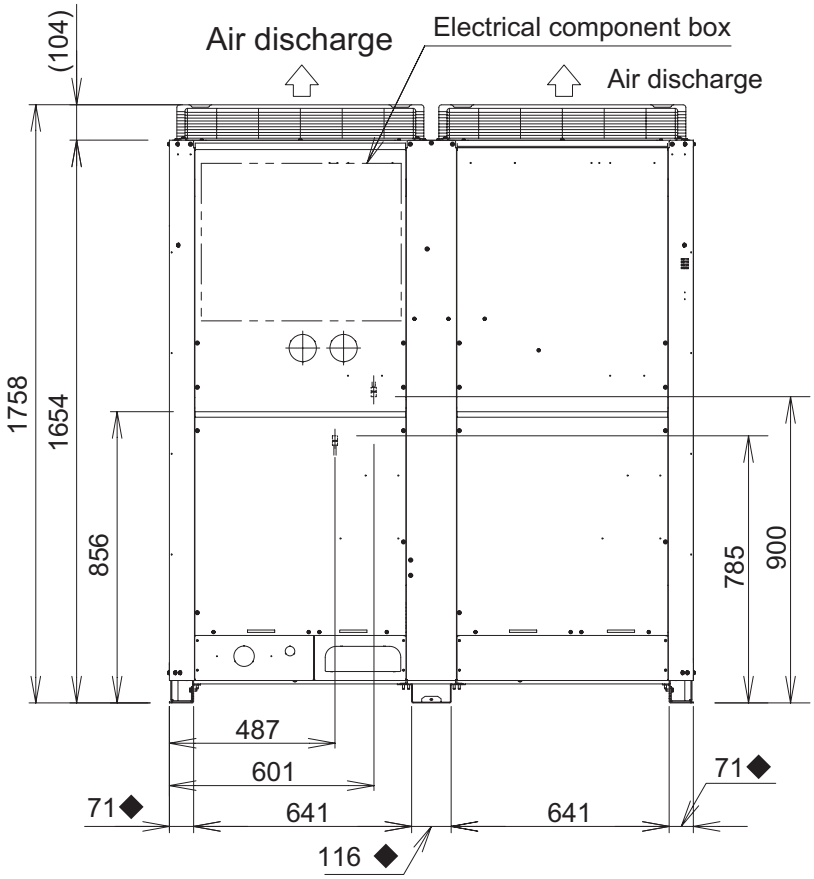

Front view

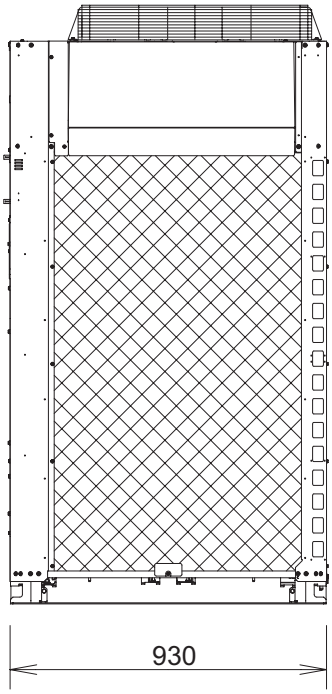

Side view

◆ Installation fixing bracket Installation side

・According to the installation site, you may choose the setting position in the depth direction of the anchor bolt from "A", "B" or "C".

A : 894 (Installation hole pitch) * The tubing is routed out from the front.
B : 730 (Installation hole pitch) * The tubing is routed out from the bottom.
C : 730 (Installation hole pitch)

2. Features of 2WAY SYSTEM

2-1. Outline of 2WAY SYSTEM

■ System example

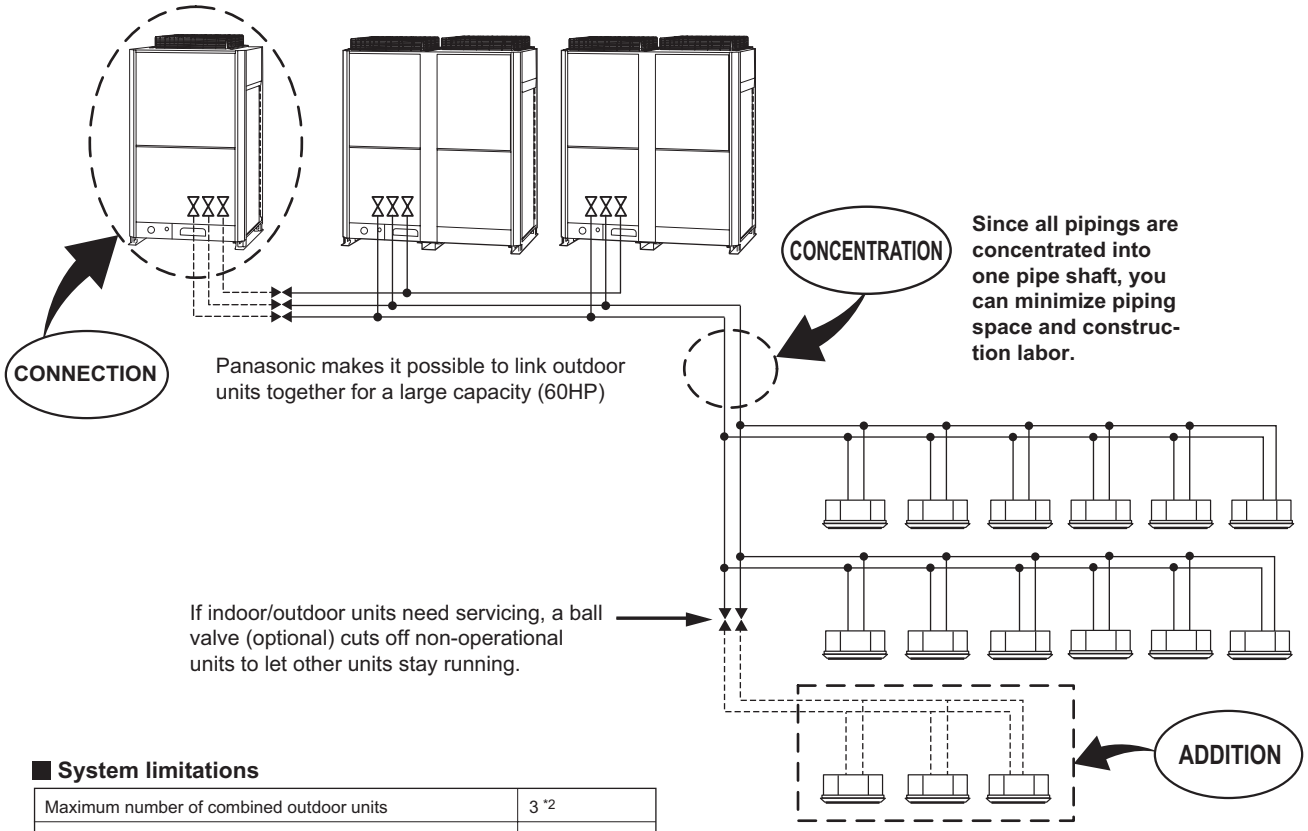

If your indoor capacity load changes in the future, it's easy to add on both indoor and outdoor units using the same pipings.

* If the additional installment of outdoor and indoor units are expected, the size of refrigerant piping should be decided according to the total capacity after the addition.

■ System limitations

Maximum number of combined outdoor units	3 *2
Maximum horsepower of combined outdoor units	168kW (60 HP)
Maximum number of connectable indoor units	64 *1
Indoor/outdoor unit capacity ratio	50~200% *3
Maximum actual piping length	180 m
Maximum level difference (when outdoor unit is lower)	50 (40) m
Maximum total piping length	1000 m

*1: In the case of 22 hp (type 61.5 kW) or smaller units, the number is limited by the total capacity of the connected indoor units.
*2: Up to 3 units can be connected if the system has been extended.
*3: It is strongly recommended that you choose the unit so the load can become between 50 and 130%.

2. Features of 2WAY SYSTEM

■ Combination of outdoor units (Standard-COP mode)

Total horse power / Type (hp)	8	10	12	14	16	18	20	22	24	26	28	30	32	34	36	38	40	42	44	46	48	50	52	54	56	58	60
8	1							1																			
10		1							1																		
12			1							1	1							1	1								
14				1				1	1	1		1						1		1							
16					1						1	1	2	1	1			1	2	2	3	2	2	1			
18						1								1		1						1		1	2	1	
20							1								1	1	2						1	1	1	2	3

■ Combination of outdoor units (High-COP mode)

- Setting the Dip switch (SW8) on the outdoor unit PCB to "ON" activates as the high-COP mode.
- When operating in the high-COP mode, the outdoor unit capacity decreases against the standard COP mode.
  See the following table and select the most suitable unit for the air conditioning load.

Total system horsepower (kW)	Combined outdoor units		
8HP (22.4)	—	—	—
10HP (28.0)	U-14ME1E81	—	—
12HP (33.5)	U-16ME1E81	—	—
14HP (40.0)	U-18ME1E81	—	—
16HP (45.0)	U-20ME1E81	—	—
18HP (50.0)	U-14ME1E81	U-8ME1E81	—
20HP (56.0)	U-16ME1E81	U-8ME1E81	—
22HP (61.5)	U-18ME1E81	U-8ME1E81	—
24HP (68.0)	U-16ME1E81	U-16ME1E81	—
26HP (73.0)	U-18ME1E81	U-16ME1E81	—
28HP (78.5)	U-20ME1E81	U-16ME1E81	—
30HP (85.0)	U-20ME1E81	U-18ME1E81	—
32HP (90.0)	U-20ME1E81	U-20ME1E81	—
34HP (96.0)	U-18ME1E81	U-16ME1E81	U-8ME1E81
36HP (101.0)	U-16ME1E81	U-16ME1E81	U-16ME1E81
38HP (107.0)	U-18ME1E81	U-16ME1E81	U-16ME1E81
40HP (113.0)	U-20ME1E81	U-16ME1E81	U-16ME1E81
42HP (118.0)	U-20ME1E81	U-18ME1E81	U-16ME1E81
44HP (124.0)	U-20ME1E81	U-18ME1E81	U-18ME1E81
46HP (130.0)	U-20ME1E81	U-20ME1E81	U-18ME1E81
48HP (135.0)	U-20ME1E81	U-20ME1E81	U-20ME1E81

* Be sure that the total load of indoor unit (load when operating the maximum number of units) should not exceed 130% of the outdoor unit capacity.

2. Features of 2WAY SYSTEM

■ Setting procedure for using High-COP mode

(1) Turn off all outdoor units.
(2) Set the DIP switch (SW8) to “ON” on all main outdoor units PCB for setting the high-COP mode.
If multiple outdoor units are connected to a system, perform the same step on each of the outdoor units. In the case of combination with the 8HP (U-8ME1E81), do set in a similar manner noted above.
If one of the outdoor units is not set in the “ON” position, the alarm message indicates “L17”.
(3) Switch on the outdoor unit.

Now the setting is over.
Paste the label of “HIGH COP MODE” on the outdoor unit set in the high-COP mode.
The purpose of this notice is to inform that the unit is in the high-COP mode before maintenance is performed.

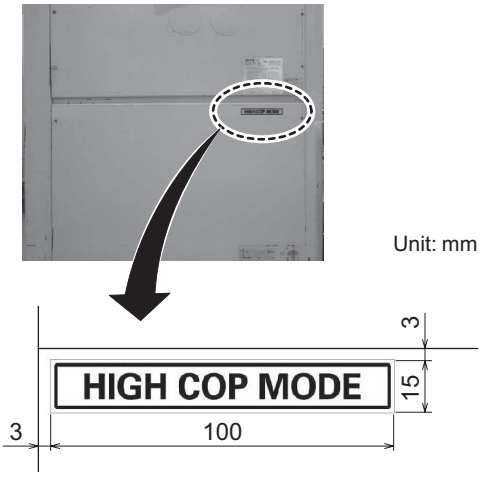

NOTE

- It may sometimes happen that the power consumption increases to that in the standard COP mode temporarily due to the maintenance drive of the outdoor unit although the high-COP mode has been set. The electrical capacitance (electrical wire length, diameter, breaker capacity and electrical capacitance for the building) should be in the same manner of the standard COP mode.
- Be sure that the total load of indoor units (load when operating the maximum number of units) should not exceed 130% of outdoor unit capacity. The limitation of the indoor-outdoor capacity ratio is 200% against the outdoor capacity in the high-COP mode.
- Select the tube length and size equivalent to the content described on pages 9 and 10 in the installation instructions. Be sure to read the total capacity of outdoor units as that in the high-COP mode.
- Select the optional distribution joints suited to the capacity.
  However, when you used the tube diameter for the standard COP mode between the outdoor unit and the first distribution joint in a system to which more than two outdoor units are connected, select joint suited to the capacity in the standard COP mode.
- The additional refrigerant charge should be calculated according to the liquid tubing size.
- The installation space is equivalent to that of the standard COP mode.
- The shield for horizontal exhaust and wind ducting are equivalent to that of the standard COP mode.

2. Features of 2WAY SYSTEM

■ Capacity control

The compressor combination (DC inverter compressor + constant-speed compressor) allows smooth capacity control from 0.8 HP to 60 HP.

Realization of smooth capacity control from 0.8HP to 60HP

Capacity control is possible smoothly with a DC inverter compressor.
The graph shown in the below is the image of the operating combination of compressors in case of 60HP system.
In actual operation, the combination will be changed by operationg condition, operating time amount, priority of compressor and so on.

Comp. HP	Unit 1 (main)	Unit 2 (sub 1)	Unit 3 (sub 2)
INV comp.	10	10	10
AC1 comp.	6	6	6
AC2 comp.	6	6	6

* 60HP = U-20ME1E81 x 3

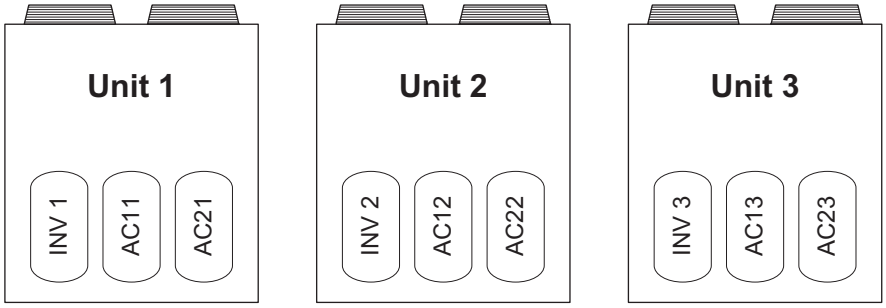

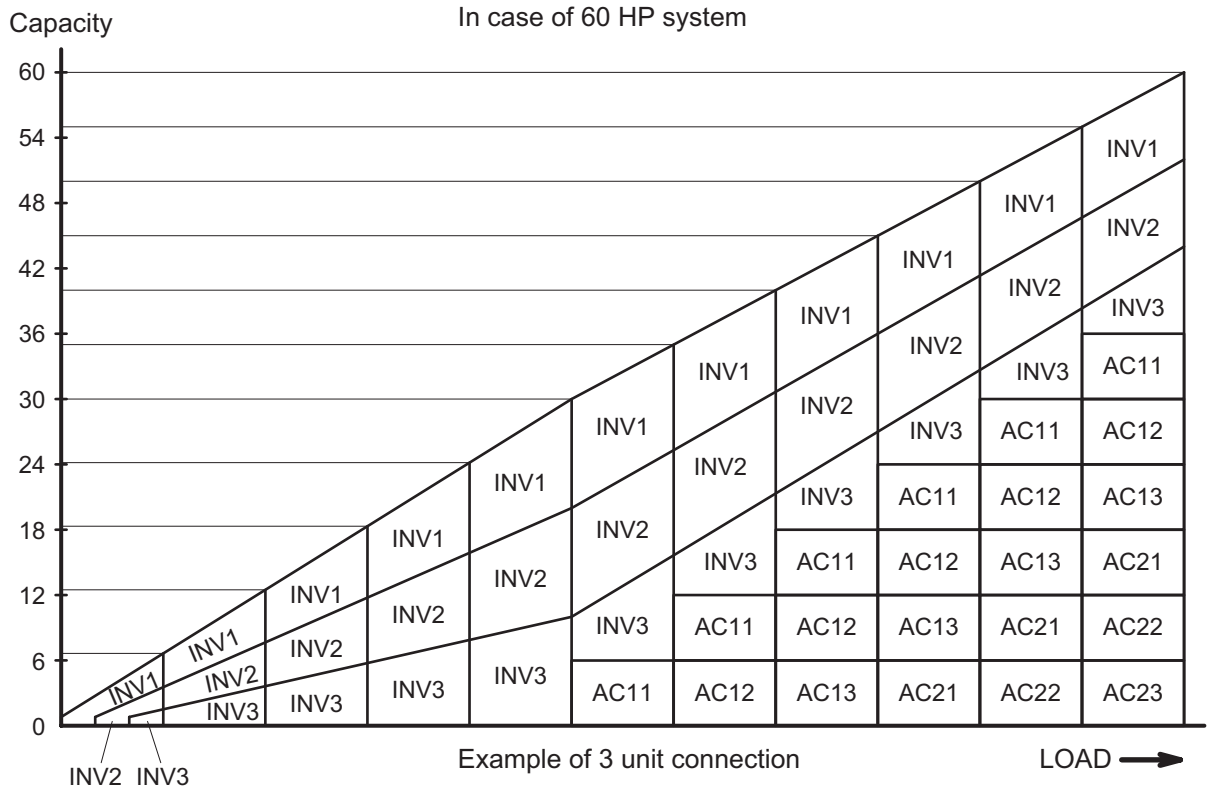

3. MARKINGS FOR DIRECTIVE 97/23/EC (PED)

Rating nameplate figure

Panasonic ME67 CE 0035

Multi Type Air Conditioner
Кондиционер Мульти-Сплит Система
Кондиціонер Мульти-спліт система

Model No. **A:** Model Name Various

Класс защиты I

POWER SOURCE : **B:** Various

MAX ELECTRIC INPUT **C:** kW A

TIME DELAY FUSE MAX SIZE : **D:** A

UNIT PROTECTION : IPX4

Operating Spec. Area
Various (Not for the PED)

MAX.WORKING PRESSURE : HIGH SIDE **E:** bar (MPa) Various
LOW SIDE **F:** bar (MPa) Various

REFRIGERANT: R410A **G:** kg. Various
NET WEIGHT: Various (Not for the PED)

SERIAL NO. : Various
Серийный номер. :
Серійний номер. :

PROD. DATE : YYYY-MM
Дата производства :
Дата виготовлення :

THE CAPACITY, CURRENT AND POWER INPUT ARE FOR THIS UNIT CONNECTED TO THE FOLLOWING INDOOR UNITS.
ПРОИЗВОДИТЕЛЬНОСТЬ, ТОК И ПОТРЕБЛЯЕМАЯ МОЩНОСТЬ ДАННОГО БЛОКА ПРИ ЕГО ПОДКЛЮЧЕНИИ К СЛЕДУЮЩИМ ВНУТРЕННИМ БЛОКАМ.
ПРОДУКТИВНІСТЬ, СТРУМ ТА СПОЖИВАНА ПОТУЖНІСТЬ ДАНОГО БЛОКУ ПРИ ЙОГО ПІДКЛЮЧЕННІ ДО НАСТУПНИХ ВНУТРІШНІХ БЛОКІВ.

Various (Not for the PED)

FOR OTHER COMBINATIONS, REFER TO MANUAL.
ИНФОРМАЦИЮ ПО ДРУГИМ КОМБИНАЦИЯМ СМОТРИТЕ В ИНСТРУКЦИИ.
ЗА ІНФОРМАЦІЄЮ СТОСОВНО ІНШИХ КОМБІНАЦІЙ ЗВЕРТАЙТЕСЯ ДО ІНСТРУКЦІЇ.

Authorized representative in EU
Panasonic Testing Centre

Panasonic Marketing Europe GmbH
Winsbergring 15, 22525 Hamburg, Germany

Panasonic Corporation
1006 Kadoma, Kadoma City Osaka, Japan

Made in Malaysia
Сделано в Малайзии
Вироблено в Малайзії
Fabricado en Malasia

Tabulation of Various data

A	U-8ME1E81	U-10ME1E81	U-12ME1E81	U-14ME1E81	U-16ME1E81
B	380 – 415 V, 3 N~, 50 Hz				
C	7.90 kW, 11.7 A	10.8 kW, 16.4 A	13.0 kW, 19.7 A	15.7 kW, 23.3 A	19.1 kW, 28.4 A
D	25 A	25 A	35 A	35 A	45 A
E	38.0 bar (3.80 MPa)				
F	25.0 bar (2.50 MPa)				
G	6.5 kg	6.8 kg	6.8 kg	8.5 kg	8.5 kg

A	U-18ME1E81	U-20ME1E81
B	380 – 415 V, 3 N~, 50 Hz	
C	19.8 kW, 30.5 A	23.1 kW, 35.4 A
D	50 A	50 A
E	38.0 bar (3.80 MPa)	
F	25.0 bar (2.50 MPa)	
G	9.0 kg	9.0 kg

Contents

2. DESIGN OF 2WAY SYSTEM

1. Model Selecting and Capacity Calculator 2-2
1-1. Operating Range 2-2
1-2. Procedure for Selecting Models and Calculating Capacity 2-3
1-3. Tubing Length 2-4
1-4. Tubing Size 2-7
1-5. Straight Equivalent Length of Joints 2-11
1-6. Check of Limit Density 2-12
1-7. Calculation of Actual Capacity of Indoor Unit 2-13
1-8. Capacity Correction Graph According to Tubing Length and Elevation Difference 2-18
2. System Design 2-20
2-1. System Example 2-20
2-2. Example of Tubing Size Selection for Extension and Additional Charge Amount 2-22
3. Electrical Wiring 2-26
3-1. General Precautions on Wiring 2-26
3-2. Recommended Wire Length and Wire Diameter for Power Supply System 2-26
3-3. Wiring System Diagrams 2-27
4. Installation Instructions 2-35
■ **Outdoor Unit** 2-35
4-1. Selecting the Installation Site for Outdoor Unit 2-35
4-2. Shield for Horizontal Exhaust Discharge 2-37
4-3. Installing the Outdoor Unit in Heavy Snow Areas 2-37
4-4. Precautions When Installing in Heavy Snow Areas 2-37
4-5. Dimensions of Wind Ducting 2-38
4-6. Dimensions of Snow Ducting 2-50
4-7. Transporting the Outdoor Unit 2-62
4-8. Installing the Outdoor Unit 2-63
4-9. Routing the Tubing 2-66
4-10. Prepare the Tubing 2-67
4-11. Connect the Tubing 2-68
■ **Indoor Unit** 2-72
4-12. Selecting the Installation Site for Indoor Unit 2-72
4-13. How to install the indoor unit 2-73
5. HOW TO PROCESS TUBING 2-148
5-1. Connecting the Refrigerant Tubing 2-148
5-2. Connecting Tubing Between Indoor and Outdoor Units 2-149
5-3. Insulating the Refrigerant Tubing 2-149
5-4. Taping the Tubes 2-151
5-5. Finishing the Installation 2-151
6. AIR PURGING 2-152
■ **Air Purging with a Vacuum Pump (for Test Run) Preparation** 2-152
7. Optional Parts 2-155
7-1. Distribution Joint Kits (CZ-P160BK2, P680BK2, P1350BK2, P680PJ2, P1350PJ2, P4HPC2, P4HP2C2, P4HP1C2) 2-155
7-2. RAP Valve Kit (CZ-P160RVK2) 2-161
7-3. External Electronic Expansion Valve Kit for Indoor Unit (CZ-P56SVK2, P160SVK2) 2-164
7-4. Filter Chamber for Indoor Unit (CZ-FDU2) 2-167
7-5. Air Intake Kit for Chamber (CZ-ATU2) 2-168
7-6. Air Intake Kit for Unit (CZ-BCU2) 2-169
7-7. Air Cut Insulation (CZ-CFU2) 2-170
8. How to select AHU system 2-173

1. Model Selecting and Capacity Calculator

1-1. Operating Range

Cooling

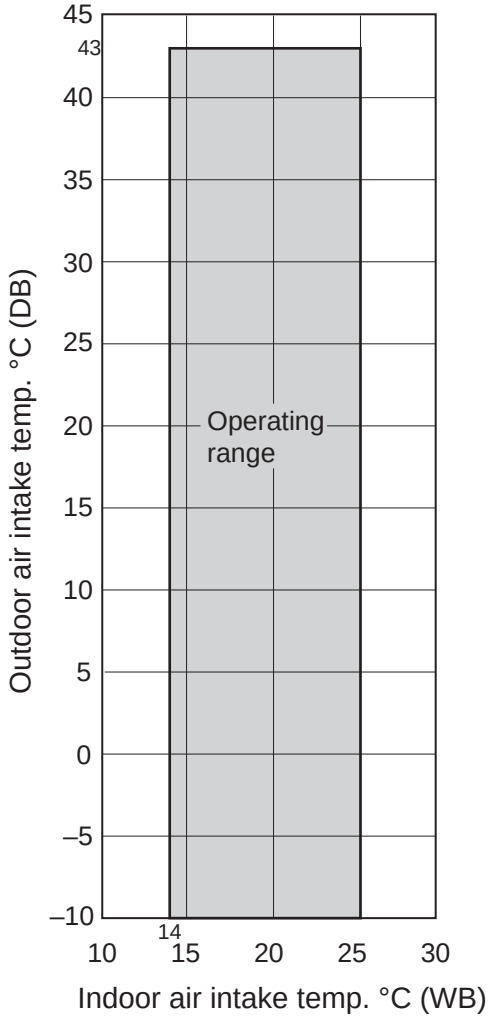

Heating

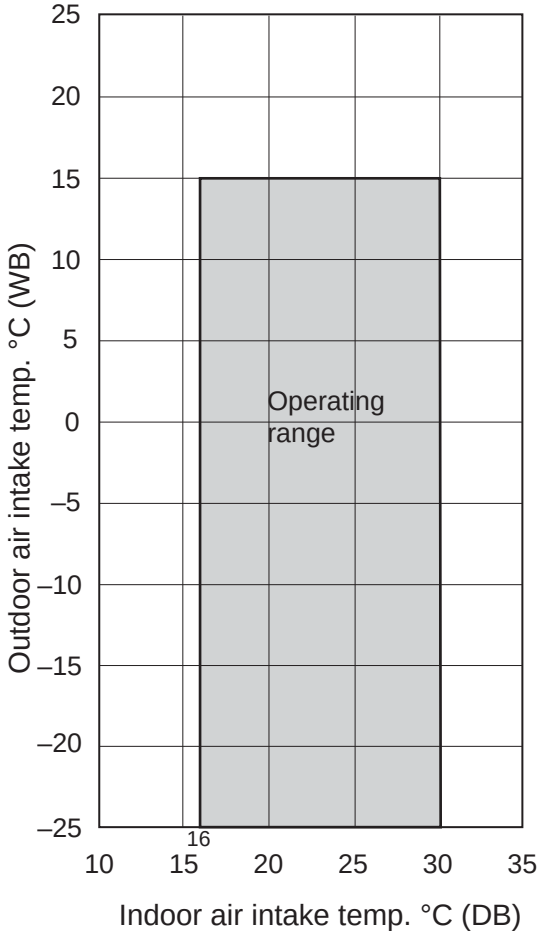

2

1. Model Selecting and Capacity Calculator

1-2. Procedure for Selecting Models and Calculating Capacity

■ Model Selection Procedure

Select the model and calculate the capacity for each refrigerant system according to the procedure shown below.

Calculation of the indoor air-conditioning load
- Calculate the maximum air-conditioning load for each room or zone.

Selection of an air conditioning system
- Select the ideal air conditioning system for air conditioning of each room or zone.

Design of the control system
- Design a suitable control system for the selected air conditioning system.

Preliminary selection of indoor and outdoor units
- Make preliminary selections that are within the allowable range for the system. ..... **2**-4 ~ **2**-13

Check of the tubing length and elevation difference
- Check that the length of refrigerant tubing and the elevation difference are within the allowable ranges..... **2**-4

Calculation of the corrected outdoor unit capacity
- Capacity correction coefficient for model **2**-13
- Capacity correction coefficient for tubing length and elevation difference **2**-16
- Heating capacity correction coefficient for frosting/defrosting **2**-15

Calculation of the corrected capacity for each indoor unit
- Capacity correction coefficient for indoor temperature conditions **2**-14, 16
- Capacity distribution ratio based on the tubing length and elevation difference ..... **2**-14 ~ 2-16

Recheck of the actual capacity for each indoor unit
- If the capacity is inadequate, reexamine the unit combinations.
  Example 1: Increasing the outdoor unit capacity **2**-20, 21
  Example 2: Increasing the indoor unit capacity **2**-22, 23
- Increasing the tubing size **2**-19

Design of tubing
- Create a tubing design which minimizes the amount of additional refrigerant charge as much as possible. ..... **2**-4 ~ **2**-12
- If tubing extension for additional unit is expected in the future, create the tubing design with adequate consideration for this extension.
- Select the tubing size for the main tube (LA) up to the No. 1 distribution joint based on the rated cooling capacity of the outdoor unit. Select tubing sizes after the distribution point based on the total rated cooling capacity of the connected indoor units.
- Increasing the tubing size of the wide tubes can reduce the loss of capacity caused by longer tubing lengths. (Only the main wide tube with the largest tube diameter (main tube LA and main tubes after the distribution point that are the same size as LA) can be changed.) In this case, it is necessary to recalculate the actual indoor unit capacities. **2**-22, 23

Calculation of additional refrigerant charge amount
- Calculate the additional refrigerant charge from the diameters and lengths of the refrigerant tubing. Even if the wide tubing diameter was increased, determine the additional refrigerant charge based only on the narrow tubing size. **2**-6
- Check the minimum indoor capacity (limit density) with respect to the amount of refrigerant. If the limit density is exceeded, be sure to install ventilation equipment or take other corrective steps. **2**-12

Design of electrical wiring capacity
- Select a wiring capacity according to the method of power supply. **2**-26

1. Model Selecting and Capacity Calculator

1-3. Tubing Length

Select the installation location so that the length and size of refrigerant tubing are within the allowable range shown in the figure below.

1. ——— Main tubing length LM = LA + LB …
2. ——— Main distribution tubes LC – LH are selected according to the capacity after the distribution joint.
3. The outdoor connection main tubing (LO portion) is determined by the total capacity of the outdoor units that are connected to the tube ends.
4. ——— Sizes of indoor unit connection tubing ℓ1 – ℓ64 are determined by the connection tubing sizes on the indoor units.

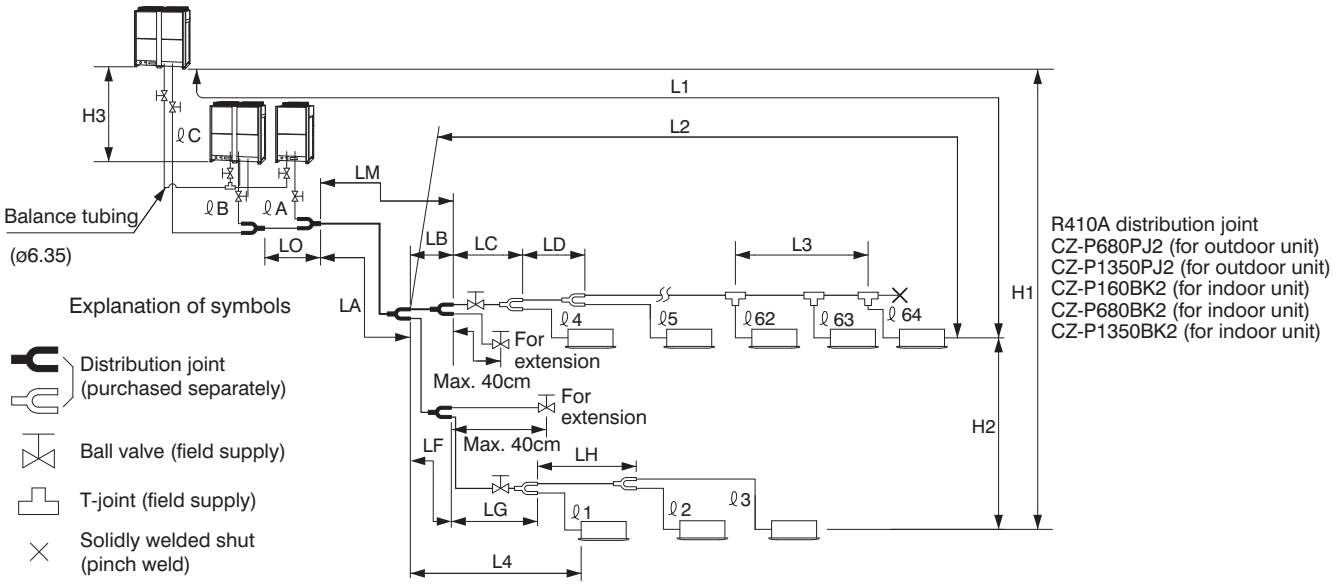

Note: Do not use commercially available T-joints for the liquid tubing and parts.

* Be sure to use special R410A distribution joints (purchased separately) for outdoor unit connections and tubing branches.

Table 2-1 Ranges that Apply to Refrigerant Tubing Lengths and to Differences in Installation Heights

Item	Mark	Contents		Length (m)
Allowable tubing length	L1	Max. tubing length	Actual length	≤ 180
			Equivalent length	≤ 200
	Δ L (L2 – L4)	Difference between max. length and min. length from the No.1 distribution joint		≤ 50 * 5
	LM	Max. length of main tubing (at max. diameter)		* 3
	ℓ1, ℓ2...ℓ64	Max. length of each distribution tube		≤ 30
	L1+ ℓ1+ ℓ2...ℓ63+ ℓA+ ℓB+LF+LG+LH	Total max. tubing length including length of each distribution tube (only liquid tubing)		≤ 1000
	ℓA, ℓB+LO, ℓC+LO	Maximum tubing length from outdoor's 1st distribution joint to each outdoor unit		≤ 10
Allowable elevation difference	H1	When outdoor unit is installed higher than indoor unit		≤ 50
		When outdoor unit is installed lower than indoor unit		≤ 40
	H2	Max. difference between indoor units		≤ 15 * 6
	H3	Max. difference between outdoor units		≤ 4
Allowable length of joint tubing	L3	T-joint tubing (field-supply); Max. tubing length between the first T-joint and solidly welded-shut end point		≤ 2

L = Length, H = Height

NOTE

1: The outdoor connection main tubing (LO portion) is determined by the total capacity of the outdoor units that are connected to the tube ends.

2: If the longest tubing length (L1) exceeds 90 m (equivalent length), increase the sizes of the main tubes (LM) by 1 rank for gas tubes and liquid tubes. (Use a field supply reducer.) (Select the tube size from the table of main tube sizes (Table 2-5) on the following page (LA table), and from the table of refrigerant tubing sizes (Table 2-7) on the second following page.)

3: If the longest main tube length (LM) exceeds 50 m, increase the main tube size at the portion before 50 m by 1 rank for the gas tubes. (Use a field supply reducer.) Determine the length less than the limitation of allowable maximum tubing length. (For the portion that exceeds 50 m, set based on the main tube sizes (LA) listed in the table on the following page.)

1. Model Selecting and Capacity Calculator

4: If the size of the existing tubing is already larger than the standard tubing size, it is not necessary to further increase the size.
* If the existing tubing is used and the amount of on-site refrigerant charge exceeds the value listed below, change the size of the tubing to reduce the amount of refrigerant.

	with 1 outdoor unit	with 2 outdoor units	with 3 outdoor units
Total amount of refrigerant for the system	50 kg	80 kg	100 kg

5: 1) Calculate the ΔL (L2(L2', L2" ···) - L4) of each combined indoor unit from the first distribution joint.
The L2(L2', L2"···) indicates the pipe length connected to the farthest indoor unit among each combined indoor unit from the first distribution joint. The L4 indicates the pipe length connected to the nearest indoor unit among all connected indoor units to the system. It is necessary to calculate the ΔL of each combined indoor unit.

2) If the calculated ΔL exceeds 40m, increase by one size of both the liquid and gas tubes.
The length of pipe needed to increase by one size becomes different according to the total cooling capacity of combined indoor unit which the ΔL exceeds 40m.
Calculate the total cooling capacity of combined indoor units which the ΔL exceeds 40m.
Then apply to a certain pipe length from the first distribution listed below.
Be sure to use the reducer (field supply) at joint portion between the original pipe and the pipe increased by one size.
If there is the necessity to increase by one size, do not increase the pipe (LB or LF) any more when the pipe LB or pipe LF part is overlapped. There can be only one time effective to increase by one size from original pipe size.

The total cooling capacity after distribution for each combined indoor unit is less than 22.4kW: 12m
The total cooling capacity after distribution for each combined indoor unit is over 22.4kW and less than 52.4kW: 20m
The total cooling capacity after distribution for each combined indoor unit is over 52.4kW: 28m

Example 1 :

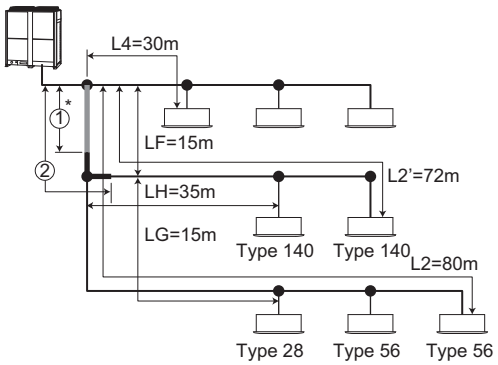

* There is an overlapping area between ① and ②. However, this is an increase by only one size.

Refer to the figure on the left.
The ΔL exceeds 40m.
ΔL = L2 - L4 = 80m - 30m = 50m
ΔL = L2' - L4= 72m - 30m = 42m
Then, calculate the value for the tube amounts.
Capacity 42 kW LF : 15m, liquid tube ø12.7, gas tube ø28.58
Capacity 14 kW LG : 15m,liquid tube ø9.52, gas tube ø15.88
Capacity 28 kW LH : 35m,liquid tube ø9.52, gas tube ø22.22

① Since the gas tube and liquid tube are extended to 12m from the 1st distribution joint to be directed towards the L2 indoor units, increase the LF to 12m by one size.
② Since the gas tube and liquid tube are extended to 20m from the 1st distribution joint to be directed towards the L2' indoor units, increase the LF to 15m and the LH to 5m by one size.

The tube length eventually becomes as follows.
LF: Total 15m, liquid tube ø15.88, gas tube ø31.75
LH: The 2nd distribution joint to 5m, liquid tube ø12.7, gas tube ø25.4. Then, the remainder is 30m, liquid tube ø9.52, gas tube ø22.22.

Example 2 :

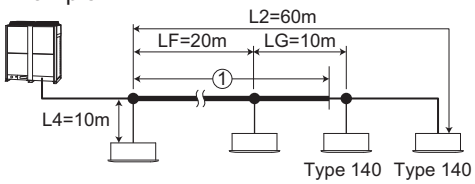

Refer to the figure on the left.
The ΔL exceeds 40m.
ΔL = L2 - L4 = 60m - 10m = 50m
Then, calculate the value for the tube amounts.
Capacity 54 kW LF: 20m, liquid tube ø15.88, gas tube ø28.58
Capacity 28 kW LG: 10m, liquid tube ø9.52, gas tube ø22.22

① Since the gas tube and liquid tube are extended to 28m from the 1st distribution joint to be directed towards the L2 indoor units.
LF: Total 20m, liquid tube ø19.05, gas tube ø31.75
LG: The 2nd distribution joint to 8m, liquid tube ø12.7, gas tube ø25.4. Then, the remainder is 2m, liquid tube ø9.52, gas tube ø22.22.

6: If the tubing length exceeds 500m, the formula is 15 x (2 - all tubing length/500). Determine the length less than the limitation of allowable maximum tubing length.

1. Model Selecting and Capacity Calculator

Additional Refrigerant Charge

Additional refrigerant charge amount is calculated below.

Required amount of additional refrigerant charge
= [(Amount of additional refrigerant charge per meter of each size of liquid tube x its tube length) + (...) + (...)]
+ [(Necessary amount of additional refrigerant charge per outdoor unit + (...) + (...)]

* Always charge accurately using a scale for weighing.
* If the existing tubing is used and the amount of on-site additional refrigerant charge exceeds the value listed below, change the size of the tubing to reduce the amount of refrigerant.

	with 1 outdoor unit	with 2 outdoor unit	with 3 outdoor unit
Total amount of refrigerant for the system	50 kg	80 kg	100 kg

Table 2-2-1 Amount of Additional Refrigerant Charge Per Meter, According to Liquid Tubing Size

Liquid tubing size	6.35	9.52	12.7	15.88	19.05	22.22	25.4
Amount of additional refrigerant charge/m (g/m)	26	56	128	185	259	366	490

2

Table 2-2-2 Necessary Amount of Additional Refrigerant Charge Per Outdoor Unit

U-8ME1E81	U-10ME1E81	U-12ME1E81	U-14ME1E81	U-16ME1E81	U-18ME1E81	U-20ME1E81
5.9 kg	6.6 kg	6.6 kg	7.8 kg	7.8 kg	8.5 kg	8.5 kg

Table 2-3 Refrigerant Charge Amount at Shipment (for Outdoor Unit)

U-8ME1E81	U-10ME1E81	U-12ME1E81	U-14ME1E81	U-16ME1E81	U-18ME1E81	U-20ME1E81
6.5 kg	6.8 kg	6.8 kg	8.5 kg	8.5 kg	9.0 kg	9.0 kg

Table 2-4 System Limitations

Max. No. allowable connected outdoor units	3 * 2
Max. capacity allowable connected outdoor units	168 kW (60 hp)
Max. connectable indoor units	64 * 1
Max. allowable indoor/outdoor capacity ratio	50 – 200 % * 3

*1: In the case of 22 hp (type 61.5 kW) or smaller units, the number is limited by the total capacity of the connected indoor units.
*2: Up to 3 units can be connected if the system has been extended.
*3: It is strongly recommended that you choose the unit so the maximum operation load can become between 50 and 130%.

1. Model Selecting and Capacity Calculator

1-4. Tubing Size

Table 2-5-1 Main Tubing Size (LA) (Standard-COP mode)

Total system horsepower (kW)	Combined outdoor units			Liquid tubing (mm)	Gas tubing (mm)
8 hp (22.4)	U-8ME1E81	—	—	ø9.52	ø19.05
10 hp (28.0)	U-10ME1E81	—	—	ø9.52	ø22.22
12 hp (33.5)	U-12ME1E81	—	—	ø12.7	ø25.4
14 hp (40.0)	U-14ME1E81	—	—	ø12.7	ø25.4
16 hp (45.0)	U-16ME1E81	—	—	ø12.7	ø28.58
18 hp (50.0)	U-18ME1E81	—	—	ø15.88	ø28.58
20 hp (56.0)	U-20ME1E81	—	—	ø15.88	ø28.58
22 hp (61.5)	U-14ME1E81	U-8ME1E81	—	ø15.88	ø28.58
24 hp (68.0)	U-14ME1E81	U-10ME1E81	—	ø15.88	ø28.58
26 hp (73.0)	U-14ME1E81	U-12ME1E81	—	ø19.05	ø31.75
28 hp (78.5)	U-16ME1E81	U-12ME1E81	—	ø19.05	ø31.75
30 hp (85.0)	U-16ME1E81	U-14ME1E81	—	ø19.05	ø31.75
32 hp (90.0)	U-16ME1E81	U-16ME1E81	—	ø19.05	ø31.75
34 hp (96.0)	U-18ME1E81	U-16ME1E81	—	ø19.05	ø31.75
36 hp (101.0)	U-20ME1E81	U-16ME1E81	—	ø19.05	ø38.1
38 hp (107.0)	U-20ME1E81	U-18ME1E81	—	ø19.05	ø38.1
40 hp (113.0)	U-20ME1E81	U-20ME1E81	—	ø19.05	ø38.1
42 hp (118.0)	U-16ME1E81	U-14ME1E81	U-12ME1E81	ø19.05	ø38.1
44 hp (124.0)	U-16ME1E81	U-16ME1E81	U-12ME1E81	ø19.05	ø38.1
46 hp (130.0)	U-16ME1E81	U-16ME1E81	U-14ME1E81	ø19.05	ø38.1
48 hp (135.0)	U-16ME1E81	U-16ME1E81	U-16ME1E81	ø19.05	ø38.1
50 hp (140.0)	U-18ME1E81	U-16ME1E81	U-16ME1E81	ø19.05	ø38.1
52 hp (145.0)	U-20ME1E81	U-16ME1E81	U-16ME1E81	ø19.05	ø38.1
54 hp (151.0)	U-20ME1E81	U-18ME1E81	U-16ME1E81	ø19.05	ø38.1
56 hp (156.0)	U-20ME1E81	U-18ME1E81	U-18ME1E81	ø19.05	ø38.1
58 hp (162.0)	U-20ME1E81	U-20ME1E81	U-18ME1E81	ø19.05	ø38.1
60 hp (168.0)	U-20ME1E81	U-20ME1E81	U-20ME1E81	ø19.05	ø38.1

*1: If future extension is planned, select the tubing diameter based on the total horsepower after extension.
However extension is not possible if the resulting tubing size is two ranks higher.
*2: The balance tube (outdoor unit tube) diameter is ø6.35.
*3: The refrigerant tubing should be used with R410A refrigerant.
*4: If the length of the longest tube (L1) exceeds 90 m (equivalent length), increase the main tube (LM) size by 1 rank for the gas and liquid tubes. (Use field-supply reducers.) (Select from Table 2-5-1 and Table 2-9.)
*5: If the longest main tube length (LM) exceeds 50 m, increase the main tube size at the portion before 50 m by 1 rank for the gas tubes.
(For the portion that exceeds 50 m, set based on the main tube sizes (LA) listed in the table above.)

1. Model Selecting and Capacity Calculator

1-4. Tubing Size (continued)

High-COP mode

Setting the DIP switch (S011) on the outdoor unit PCB to “ON” activates the high-COP mode.
* Hereafter, the DIP switch (S011) “ON” is defined as the high-COP mode and “OFF” is defined as the standard COP mode.

Outdoor unit capacity and tubing diameter during high-COP mode

When operating in the high-COP mode, the outdoor unit capacity decreases against the standard COP mode.
Referring to the following table, select the most suitable unit and main pipe diameter for the air conditioning load.

Table 2-5-2 Main Tubing Size (LA) (High-COP mode)

Total system horsepower (kW)	Combined outdoor units			Liquid tubing (mm)	Gas tubing (mm)
8 hp (22.4)		—	—	—	—
10 hp (28.0)	U-14ME1E81	—	—	ø9.52	ø22.22
12 hp (33.5)	U-16ME1E81	—	—	ø12.7	ø25.4
14 hp (40.0)	U-18ME1E81	—	—	ø12.7	ø25.4
16 hp (45.0)	U-20ME1E81	—	—	ø12.7	ø28.58
18 hp (50.0)	U-14ME1E81	U-8ME1E81	—	ø15.88	ø28.58
20 hp (56.0)	U-16ME1E81	U-8ME1E81	—	ø15.88	ø28.58
22 hp (61.5)	U-18ME1E81	U-8ME1E81	—	ø15.88	ø28.58
24 hp (68.0)	U-16ME1E81	U-16ME1E81	—	ø15.88	ø28.58
26 hp (73.0)	U-18ME1E81	U-16ME1E81	—	ø19.05	ø31.75
28 hp (78.5)	U-20ME1E81	U-16ME1E81	—	ø19.05	ø31.75
30 hp (85.0)	U-20ME1E81	U-18ME1E81	—	ø19.05	ø31.75
32 hp (90.0)	U-20ME1E81	U-20ME1E81	—	ø19.05	ø31.75
34 hp (96.0)	U-18ME1E81	U-16ME1E81	U-8ME1E81	ø19.05	ø31.75
36 hp (101.0)	U-16ME1E81	U-16ME1E81	U-16ME1E81	ø19.05	ø38.1
38 hp (107.0)	U-18ME1E81	U-16ME1E81	U-16ME1E81	ø19.05	ø38.1
40 hp (113.0)	U-20ME1E81	U-16ME1E81	U-16ME1E81	ø19.05	ø38.1
42 hp (118.0)	U-20ME1E81	U-18ME1E81	U-16ME1E81	ø19.05	ø38.1
44 hp (124.0)	U-20ME1E81	U-18ME1E81	U-18ME1E81	ø19.05	ø38.1
46 hp (130.0)	U-20ME1E81	U-20ME1E81	U-18ME1E81	ø19.05	ø38.1
48 hp (135.0)	U-20ME1E81	U-20ME1E81	U-20ME1E81	ø19.05	ø38.1

* Be sure that the total load of indoor units (load when operating the maximum number of units) should not exceed 130% of the outdoor unit capacity.

Tube diameter of each outdoor unit

When connecting the tube to the outdoor unit in the high-COP mode, you may need to use smaller diameter tubes.
So, it is necessary to provide the reducer for the connection. Supply the reducer in the field.

For the system to which more than two outdoor units are connected, you can use the tube diameter of the standard COP mode between the outdoor unit and the first distribution joint (inside the dotted lines of Fig. 2-1).

* Beyond the first distribution joint (outside the dotted lines of Fig. 2-1), be sure to select the tube diameter according to the outdoor unit capacity in the high-COP mode.
* The balance tube diameter is 6.35 mm in every unit.

1. Model Selecting and Capacity Calculator

Tube diameter of each outdoor unit (Continued)

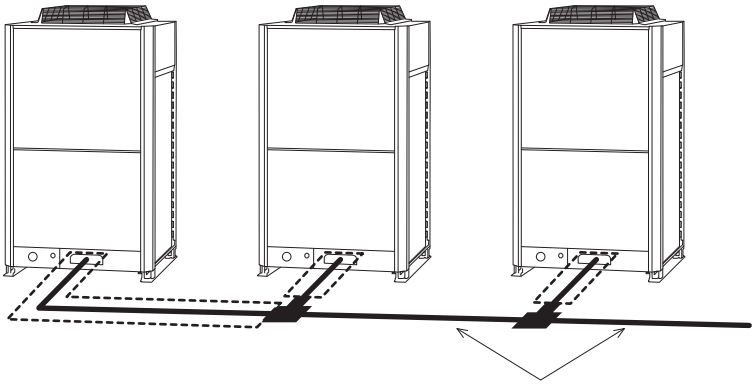

Select the diameter of these tubes according to the outdoor unit capacity in the high-COP mode.

Fig. 2-1

Table 2-5-3 Unit : mm

Standard COP mode	Capacity	14 hp	16 hp	18 hp	20 hp
	Gas tubing	ø25.4	ø28.58	ø28.58	ø28.58
	Liquid tubing	ø12.7	ø12.7	ø15.88	ø15.88

Table 2-5-4

High-COP mode	Capacity	10 hp	12 hp	14 hp	16 hp
	Gas tubing	ø22.22	ø25.4	ø25.4	ø28.58
	Liquid tubing	ø9.52	ø12.7	ø12.7	ø12.7

Gas valve diameter of outdoor unit	ø25.4	ø25.4	ø28.58	ø28.58
Liquid valve diameter of outdoor unit	ø12.7	ø12.7	ø15.88	ø15.88

* Only for the system to which more than two outdoor units are connected, you can use the tube diameter for the standard COP mode up to the first distribution joint.

Example : When the capacity is 10 hp in the high-COP mode

- You need to use reducers (field supplied) to connect the 22.22 mm diameter tube (Table 2-5-4) to the 25.4 mm diameter gas valve (Table 2-5-3).
  However, only for the system to which more than two outdoor units are connected, you can use 25.4 mm diameter tubes without using any reducers.
- You need to use reducers (field supplied) to connect the 9.52 mm diameter tube (Table 2-5-4) to the 12.7 mm diameter liquid valve (Table 2-5-3).
  However, only for the system to which more than two outdoor units are connected, you can use 12.7 mm diameter tubes without using any reducers.

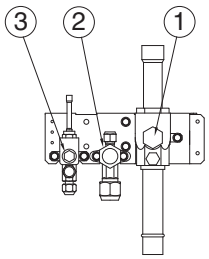

1. Model Selecting and Capacity Calculator

■ Size of tubing (LO) between outdoor units

Select the size of tubing between outdoor units based on the main tubing size (LA) as given in the tables under the section of 2-5-1 Main Tubing Size (LA)(Standard-COP mode) and 2-5-2 Main Tubing Size (LA)(High-COP mode).

Table 2-6 Main Tubing Size After Distribution (LB, LC...)

Unit: mm
hp = horsepower

Total capacity after distribution	Below kW	7.1 (2.5 hp)	16.0 (6 hp)	22.5 (8.1 hp)	30.0 (11 hp)	42.0 (15 hp)	52.4 (19 hp)	70.0 (25 hp)	98.0 (35 hp)	–
	Over kW	–	7.1 (2.5 hp)	16.0 (6 hp)	22.5 (8.1 hp)	30.0 (11 hp)	42.0 (15 hp)	52.4 (19 hp)	70.0 (25 hp)	98.0 (35 hp)
Tubing size	Gas tubing (mm)	ø12.7	ø15.88	ø19.05	ø22.22	ø25.4	ø28.58	ø28.58	ø31.75	ø38.1
	Liquid tubing (mm)	ø9.52	ø9.52	ø9.52	ø9.52	ø12.7	ø12.7	ø15.88	ø19.05	ø19.05

NOTE In case the total capacity of connected indoor units exceeds the total capacity of the outdoor units, select the main tubing size for the total capacity of the outdoor units. (Especially the main tubing segments of LA, LB and LF.)

Table 2-7 Outdoor Unit Tubing Connection Size(ℓA – ℓC)

Unit: mm

kW	22.4	28.0	33.5	40.0	45.0	50.0	56.0
Gas tubing	ø19.05	ø22.22	ø25.4		ø28.58		
	Brazing connection						
Liquid tubing	ø9.52		ø12.7			ø15.88	
	Flare connection						
Balance tubing	ø6.35						
	Flare connection						

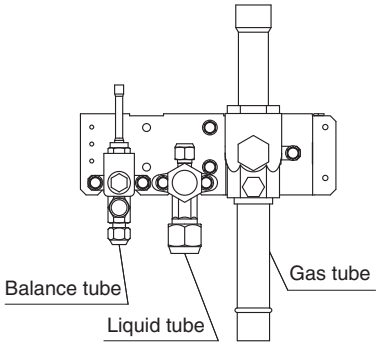

Table 2-8 Indoor Unit Tubing Connection Size

Indoor unit type	15	22	28	36	45	56	73	90	106	140	160	224	280
Gas tubing (mm)	ø12.7						ø15.88					ø19.05	ø22.22
Liquid tubing (mm)	ø6.35						ø9.52						

Note: Use C1220T-1/2H or -H material for tubing over ø22.22.

Table 2-9 Refrigerant tubing (Existing tubing can be used.)

Tubing size (mm)			
Material O		Material 1/2H•H	
ø6.35	t 0.8	ø22.22	t 1.0
ø9.52	t 0.8	ø25.40	t 1.0
ø12.7	t 0.8	ø28.58	t 1.0
ø15.88	t 1.0	ø31.75	t 1.1
ø19.05	t 1.2	ø38.10	over t 1.35
		ø41.28	over t 1.45

* When bending the tubes, use a bending radius that is at least 4 times the outer diameter of the tubes.
In addition, take sufficient care to avoid crushing or damaging the tubes when bending them.

1. Model Selecting and Capacity Calculator

■ Straight equivalent length of joints

1-5. Straight Equivalent Length of Joints

Design the tubing system by referring to the following table for the straight equivalent length of joints.

Straight Equivalent Length of Joints

Wide tubing size (mm)	12.7	15.88	19.05	22.22	25.4	28.58	31.75	38.1
90° elbow	0.3	0.35	0.42	0.48	0.52	0.57	0.7	0.79
45° elbow	0.23	0.26	0.32	0.36	0.39	0.43	0.53	0.59
U-shape tube bent (R60 - 100 mm)	0.9	1.05	1.26	1.44	1.56	1.71	2.1	2.37
Trap bend	2.3	2.8	3.2	3.8	4.3	4.7	5.0	5.8
Y-branch distribution joint	Equivalent length conversion not needed.							
Ball valve for service	Equivalent length conversion not needed.							

● Capacity loss caused by differences in tubing diameters

* Capacity loss will occur if a tubing system that matches the horsepower is not selected (for example, if a tubing system was determined and installed with no plan for extension and extension occurs later). The loss rate can be found from the graph below.

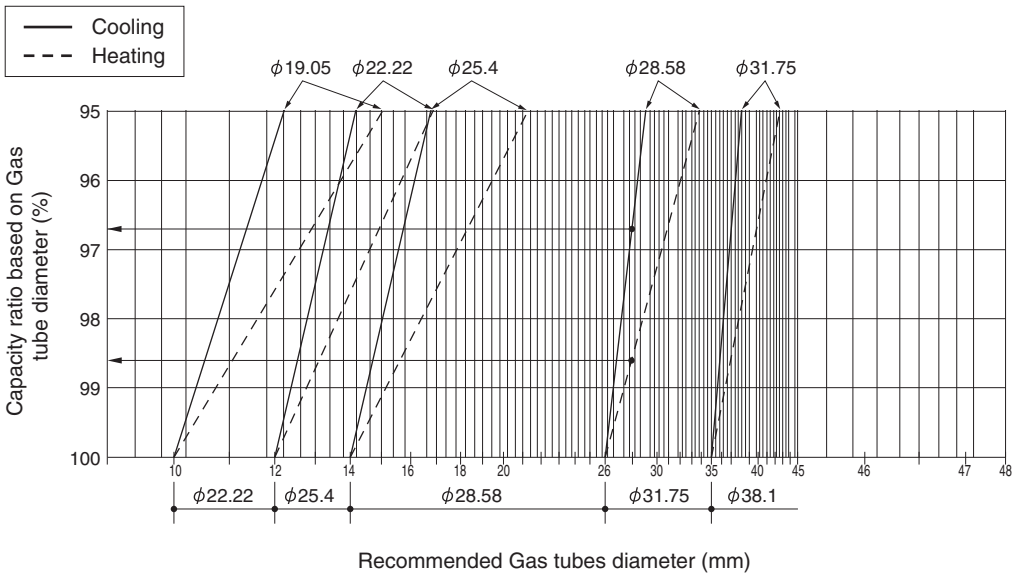

(Reading the graph)
<Example 1>
Currently a 20 HP system and ϕ 28.58 Gas tubings are used. Subsequently the system is expanded, with 8 HP added to the same tubing system.

- Horsepower after extension: 20 + 8 = 28 HP
- From the graph above: Cooling: Capacity ratio is 96.7%. Actual capacity = 28 × 0.967 = 27.1 HP
  Heating: Capacity ratio is 98.6%. Actual capacity = 28 × 0.986 = 27.6 HP

1. Model Selecting and Capacity Calculator

■ Additional refrigerant charge amount

Additional refrigerant charge amount is calculated below.

Required amount of additional refrigerant charge
= [(Amount of additional refrigerant charge per meter of each size of liquid tube x its tube length) + (...) + (...)]
+ [(Necessary amount of additional refrigerant charge per outdoor unit + (...) + (...)]

* Always charge accurately using a scale for weighing.

* If the existing tubing is used and the amount of on-site refrigerant charge exceeds the value listed below, change the size of the tubing to reduce the amount of refrigerant.

Total amount of refrigerant for the system with 1 outdoor unit : 50 kg
Total amount of refrigerant for the system with 2 outdoor units : 80 kg
Total amount of refrigerant for the system with 3 outdoor units : 100 kg

Amount of Additional Refrigerant Charge Per Meter, According to Liquid Tubing Size

Liquid tubing size	6.35	9.52	12.7	15.88	19.05	22.22	25.4
Amount of additional refrigerant charge/m (g/m)	26	56	128	185	259	366	490

2

■ Check of limit density

WARNING **Always check the gas density limit for the room in which the unit is installed.**

1-6. Check of Limit Density

When installing an air conditioner in a room, it is necessary to ensure that if the refrigerant gas accidentally leaks out, its density does not exceed the limit level for that room.
If the density could exceed the limit level, it is necessary to provide an opening between the unit and the adjacent room, or to install mechanical ventilation which is interlocked with the leak detector.

$$\frac{\textbf{Overall refrigerant charge amount for the air conditioner : kg}}{\textbf{(Minimum room volume for indoor unit: m}^3\textbf{)}} \leq \textbf{Limit density 0.3 (kg/m}^3\textbf{)}$$

The limit density of refrigerant which is used in this unit is 0.3 kg/m^3 (ISO 5149).
The shipped outdoor unit comes charged with the amount of refrigerant fixed for each type, so add it to the amount that is charged in the field. (For the refrigerant charge amount at shipment, refer to the unit's nameplate.)

Minimum indoor volume and floor area as against the amount of refrigerant is roughly as given in the following table.

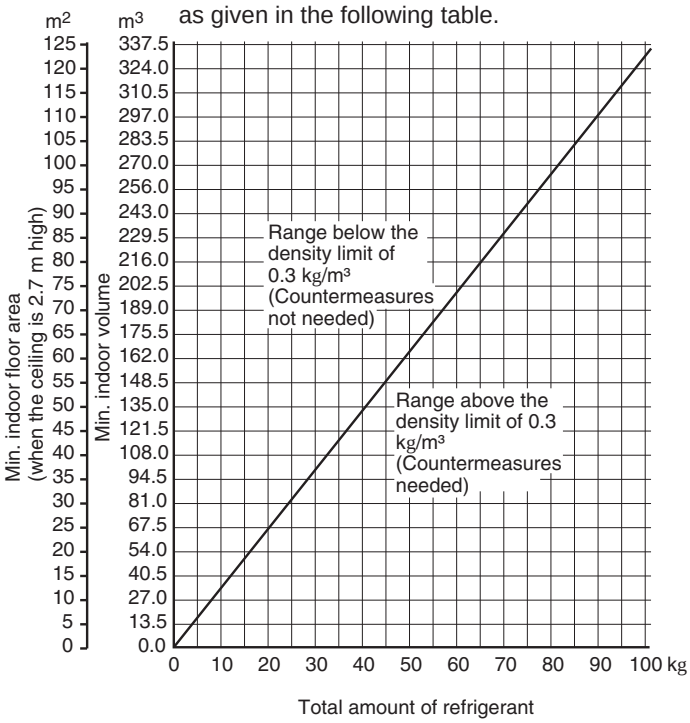

CAUTION **Pay special attention to any location, such as a basement, etc., where leaking refrigerant can accumulate, since refrigerant gas is heavier than air.**

1. Model Selecting and Capacity Calculator

1-7. Calculation of Actual Capacity of Indoor Unit

■ Calculating the actual capacity of each indoor unit

Because the capacity of a multi air-conditioner changes according to the temperature conditions, tubing length, elevation difference and other factors, select the correct model after taking into account the various correction values.
When selecting the model, calculate the corrected capacities of the outdoor unit and each indoor unit.
Use the corrected outdoor unit capacity and the total corrected capacity of all the indoor units to calculate the actual final capacity of each indoor unit.

1. Outdoor unit capacity correction

Outdoor unit capacity correction (kW) = Rated capacity × (A) × (B) × (C) × (D)

(A) Capacity correction for the outdoor unit temperature conditions (%)

Read the capacity correction for outdoor unit temperature, indoor unit temperature and indoor/ outdoor ratio as shown in the section “9. CAPACITY TABLE”.

* Indoor unit temperature is indoor unit rated capacity - weighted average temperature.

Example

Cooling operation

No.	(a) Rated capacity	(b) Intake temperature	(a) × (b)
1	2.8 kW	19 WB	53.2
2	3.6 kW	18 WB	64.8
3	4.5 kW	17 WB	76.5
4	5.6 kW	16 WB	89.6

$$\text{Rated capacity-weighted average temperature} = \frac{\sum((a)\times(b))}{\sum(a)} = 17.2\text{WB}$$

* The indoor/ outdoor ratio should be selected according to the real rated capacity.

Example

There are 4 indoor units for class 28, 36, 45, 56 and the outdoor unit HP is 8 (22.4kW in the cooling-mode, 25.0kW in the heating-mode).

No.	Rated cooling capacity	Rated heating capacity
1	2.8 kW	3.2 kW
2	3.6 kW	4.2 kW
3	4.5 kW	5.0 kW
4	5.6 kW	6.3 kW
Total	16.5 kW	18.7 kW
I/O ratio	73.7%	74.8 %

(B) Capacity correction coefficient for outdoor unit tubing length (%)

From the graph of capacity change characteristics resulting from tubing length and elevation difference on page “ 2-16 ”, read the capacity correction coefficient.

* Use the lowest capacity changing ratio. Usually, the furthest and highest or the lowest indoor unit is used.

(C) Surplus capacity correction coefficient for outdoor unit temperature conditions (%)

From the graph of surplus capacity characteristics resulting from outdoor temperature on page “ 2-15 ”, read the capacity correction coefficient.

(D) Capacity correction coefficient for outdoor unit frosting and defrosting during heating operation (%)

From the outdoor unit heating capacity correction coefficient during frosting / defrosting on page “ 2-15 ”, read the capacity correction coefficient.

1. Model Selecting and Capacity Calculator

2. Indoor unit capacity correction coefficient

Indoor unit capacity correction (kW) = (G) × (H) × (C) × (D)

* Indoor unit capacity correction ≦ (G)

(E) Capacity correction for the indoor unit temperature conditions (kW)

From the graph of indoor capacity characteristics on page “ 2-16 ”, read the capacity correction coefficient for indoor unit temperature conditions.

(E) = Capacity correction coefficient for indoor unit temperature conditions × Rated capacity

(F) Calculate the Capacity distribution ratio (%)

$$(F) = \frac{(E)}{\sum(E)}$$

(G) Distribute the outdoor unit capacity among each indoor unit (kW)

(G) = (A) × (F) × rated capacity of outdoor unit (kW)

(H) Capacity correction coefficient for tubing length and elevation difference (%)

From the graph of capacity change characteristics resulting from tubing length and elevation difference on page “ 2-16 ”, read the capacity correction coefficient.

1. Model Selecting and Capacity Calculator

Surplus capacity correction coefficient (%)

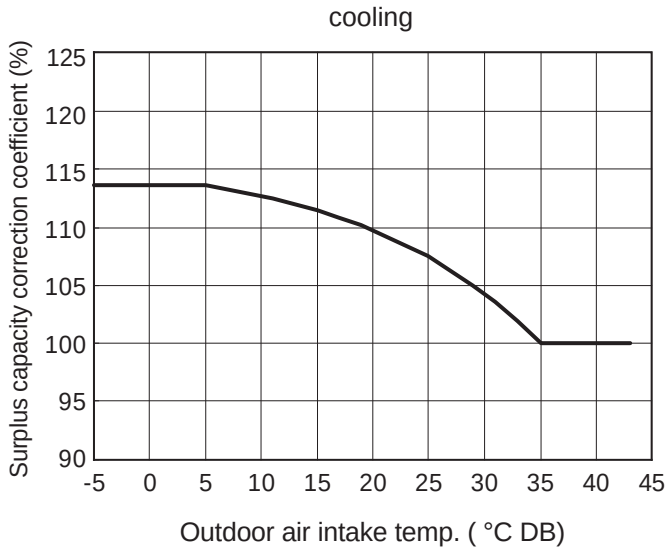

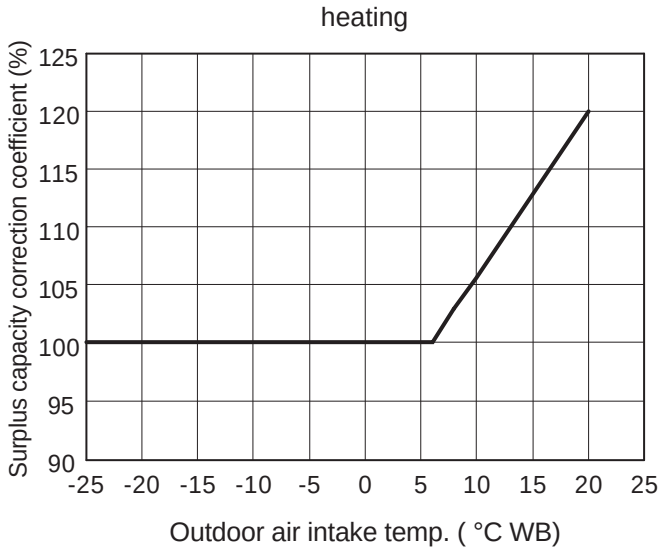

3. Graph of capacity correction coefficients

■ **Outdoor unit heating capacity correction coefficient during frosting/defrosting (1 – (4))**

Outdoor intake air temp. (°CWB, RH85%)	–25	–24	–23	–22	–21	–20	–15	–10	–8	–6	–5	–4	–2	–1
Correction coefficient	0.97	0.97	0.97	0.97	0.97	0.97	0.97	0.97	0.96	0.94	0.91	0.89	0.87	0.87

Outdoor intake air temp. (°CWB, RH85%)	0	1	2	3	4	5	6
Correction coefficient	0.87	0.88	0.89	0.91	0.92	0.95	1.0

* To calculate the heating capacity with consideration for frosting/defrosting operation, multiply the heating capacity found from the capacity graph by the correction coefficient from the table above.

1. Model Selecting and Capacity Calculator

■ Graph of indoor unit capacity characteristics (2 – (2))

Indoor unit cooling capacity characteristics

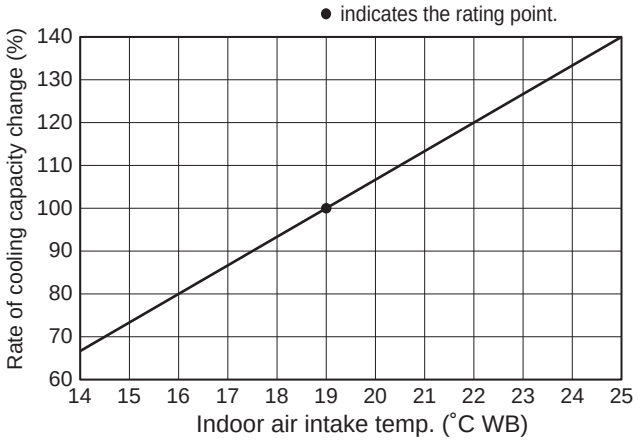

Indoor unit heating capacity characteristics

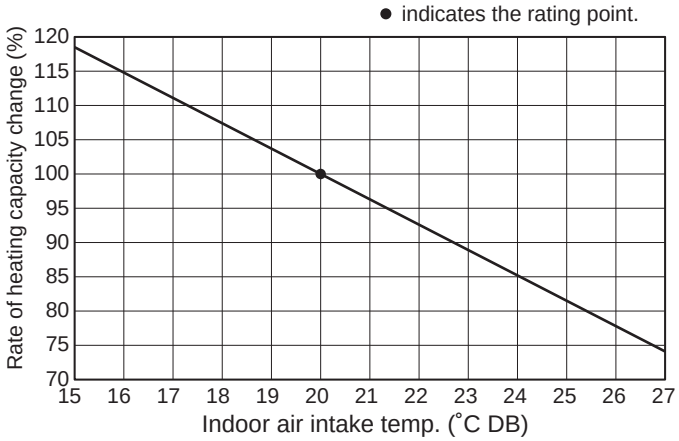

■ Graph of capacity change characteristics resulting from tubing length and elevation difference (1 / 2 – (3))

(Performance correction coefficients by elevation difference of refrigerant tube length [performance change rate ÷ 100] is calculated by the following line map.)

<Cooling>

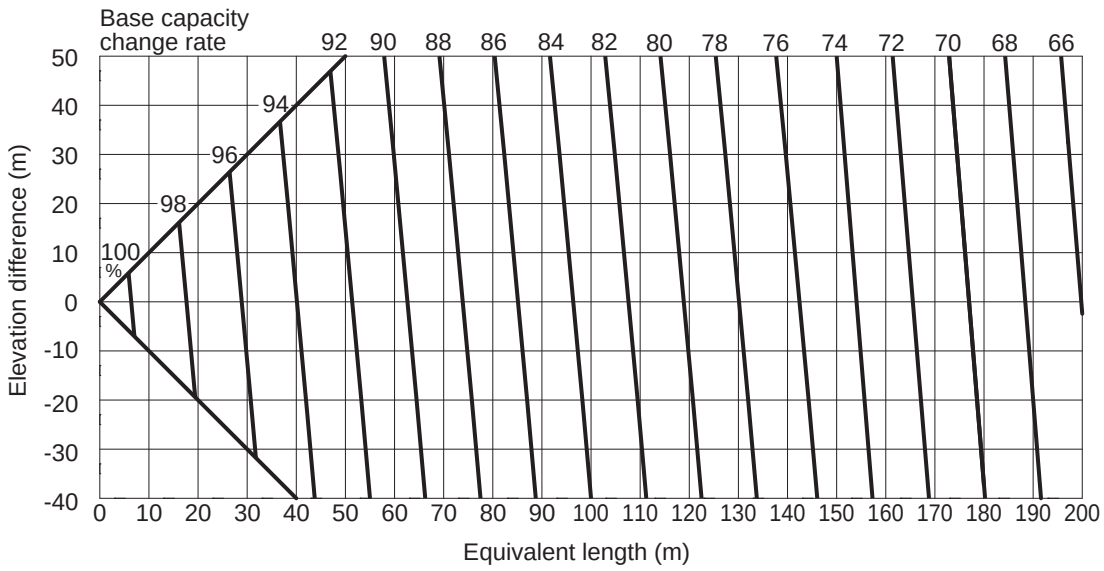

<Heating>

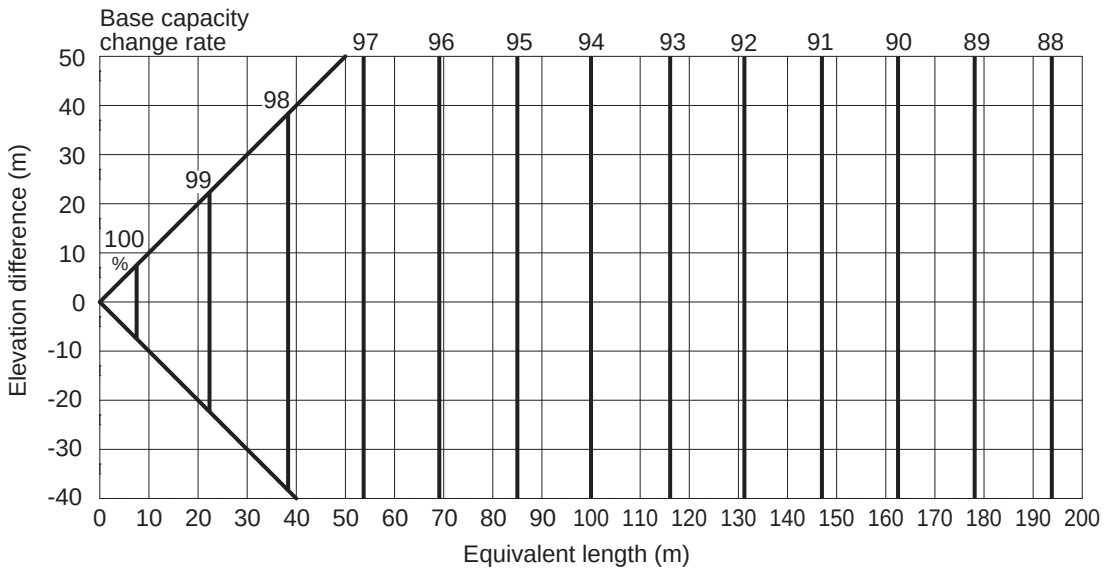

1. Model Selecting and Capacity Calculator

The positive side for the elevation difference indicates that the outdoor unit is installed at a higher position than the indoor units. The negative side indicates the opposite.

- The capacity loss that is caused by the tubing length can be reduced by increasing the sizes of the gas tubes.
  Refer to Table 2-10-1 and make the appropriate changes. However be sure that the total length does not exceed the maximum.
  * The only sizes which can be increased are the LM (main tube with the largest diameter) gas tubes, and the changes are limited to those shown in Table 2-10-1.
    In addition, note that the additional refrigerant charge is determined only by the liquid tube size.

Table 2-10-1 Equivalent Length Correction Coefficient when the Size of the Gas Tubes (LM) is Increased

Standard tubing diameter (gas tube, mm)	ø12.7	ø15.88	ø19.05	ø22.22	ø25.4	ø28.58	ø31.75	ø38.1
Tubing diameter after change (gas tube, mm)	ø15.88	ø19.05	ø22.22	ø25.4	ø28.58	ø31.75	ø38.1	ø41.28
Equivalent length correction coefficient	0.4		0.5			0.6		0.7

* If the size of the gas tubes (LM) have been increased, apply the correction coefficient from Table 2-10-1 and calculate the equivalent length of the LM section.

Equivalent length of tubing after size increase
= Standard tubing equivalent length × Equivalent length correction coefficient

1. Model Selecting and Capacity Calculator

1-8. Capacity Correction Graph According to Tubing Length and Elevation Difference

● **Sample calculations**

Indoor/Outdoor Capacity Ratio : (cooling) 125%
: (heating) 127%

Total Indoor Unit Rated Capacity Cooling : 70.0 kW Heating : 80.0 kW	
Total Outdoor Unit Estimation Capacity Cooling : 56.54 kW Heating : 57.81 kW	Total Indoor Unit Estimation Capacity Cooling : 58.19 kW Heating : 65.75 kW

Model name		Rated Capacity	Capacity Estimation by Temp. condition and Indoor/Outdoor Capacity Ratio				Capacity Estimation by the Equivalent Length			Capacity Estimation coefficient by Frost /Defrost
			Temperature Conditions		Estimation coefficient	Capacity	Elevation Difference	Equivalent Length	Estimation coefficient	
		(kW)	°C	%	%	kW	m	m	%	%
U-20ME1E81	Cooling	56.0	40.0	27.0	107.94	60.44	5.0	42.0	93.54	
	Heating	63.0	7.0	38.0	105.52	66.48			97.71	89.0
Indoor Unit class 140	Cooling	14.0	27.0	21.0	57.57	8.06	5.0	8.4	99.42	
	Heating	16.0	15.0	53.0	98.49	15.76			99.86	
Indoor Unit class 140	Cooling	14.0	27.0	36.0	74.84	10.48	5.0	18.0	97.74	
	Heating	16.0	18.0	34.0	89.26	14.28			99.25	
Indoor Unit class 140	Cooling	14.0	27.0	47.0	86.35	12.09	5.0	26.4	96.27	
	Heating	16.0	20.0	25.0	83.10	13.30			98.71	
Indoor Unit class 140	Cooling	14.0	27.0	59.0	97.86	13.70	5.0	42.0	93.54	
	Heating	16.0	22.0	17.0	76.94	12.31			97.71	
Indoor Unit class 140	Cooling	14.0	27.0	78.0	115.13	16.12	5.0	27.6	96.06	
	Heating	16.0	25.0	31.0	67.71	10.83			98.63	

1. Model Selecting and Capacity Calculator

- If the maximum tubing length (L1) exceeds 90 m (equivalent length), increase the tubing size of the main liquid, gas tubes (LM) by one rank.
  However, the upper limit for the gas tube size is ø41.28.
- Increasing the tubing size of the gas tubes can reduce the loss of capacity caused by longer tubing lengths.
  Refer to Table 2-10-2 to increase the tubing size. However, the maximum allowable tubing length must not be exceeded.

* The amount of additional refrigerant charge is determined from the liquid tube size only.

Table 2-10-2 Equivalent Length Correction Coefficient when the Size of the Gas Tubes (LM) is Increased

Standard tubing diameter (gas tube, mm)	ø12.7	ø15.88	ø19.05	ø22.22	ø25.4	ø28.58	ø31.75	ø38.1
Tubing diameter after change (gas tube, mm)	ø15.88	ø19.05	ø22.22	ø25.4	ø28.58	ø31.75	ø38.1	ø41.28
Equivalent length correction coefficient	0.4		0.5			0.6		0.7

* If the size of the gas tubes (LM) have been increased, apply the correction coefficient from Table 2-10-2 and calculate the equivalent length of the LM section.

Equivalent length of tubing after size increase
= Standard tubing equivalent length × Equivalent length correction coefficient

2

2. System Design

2-1. System Example

Below are the tables created using the “PAC System Diagram Software”.

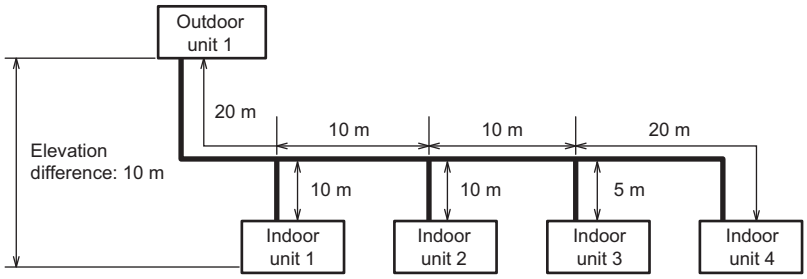

Selection conditions

Assume that installation is in a 50 Hz region.

		Outdoor unit	Room1 (indoor unit 1)	Room2 (indoor unit 2)	Room3 (indoor unit 3)	Room4 (indoor unit 4)
Cooling	Air condition (DB / WB)	33.0 / 22.5	26.0 / 18.0	26.0 / 18.0	26.0 / 18.0	26.0 / 18.0
	Max. load (kW)	-	14.0	12.0	12.0	7.0
Heating	Air condition (DB / WB)	3.0 / 2.0	21.0 / 16.0	21.0 / 16.0	21.0 / 16.0	21.0 / 16.0
	Max. load (kW)	-	16.0	14.5	14.5	7.2
Actual tubing length		60 m	30 m	40 m	45 m	60 m
Equivalent length (with consideration for curves, etc.)		72 m	36 m	48 m	54 m	72 m

Preliminary selection

	Outdoor unit	Room1 (indoor unit 1)	Room2 (indoor unit 2)	Room3 (indoor unit 3)	Room4 (indoor unit 4)
Selected model	U-18ME1E81	Type 160	Type 140	Type 140	Type 73
Load (cooling / heating) (kW)	-	14.0	12.0	12.0	7.0
Rated capacity (cooling / heating) (kW)	50.0 / 56.0	16.0 / 18.0	14.0 / 16.0	14.0 / 16.0	7.3 / 8.0
Corrected capacity (cooling / heating) (kW)	43.3 / 48.0	14.5 / 17.2	12.4 / 15.1	12.2 / 15.1	6.2 / 7.5
Actual capacity (cooling / heating) (kW)	-	14.5 / 17.2	12.4 / 15.1	12.2 / 15.1	6.2 / 7.5

Indoor unit changes

Increase by one rank because the capacity of the indoor unit 4 is lower than the maximum load.

	Outdoor unit	Room1 (indoor unit 1)	Room2 (indoor unit 2)	Room3 (indoor unit 3)	Room4 (indoor unit 4)
Selected model	U-18ME1E81	Type 160	Type 140	Type 140	Type 106
Load (cooling / heating) (kW)	-	14.0	12.0	12.0	7.0
Rated capacity (cooling / heating) (kW)	50.0 / 56.0	16.0 / 18.0	14.0 / 16.0	14.0 / 16.0	10.6 / 11.4
Corrected capacity (cooling / heating) (kW)	42.9 / 47.1	13.5 / 15.9	11.5 / 14.0	11.4 / 14.0	8.3 / 9.8
Actual capacity (cooling / heating) (kW)	-	13.5 / 15.9	11.5 / 14.0	11.4 / 14.0	8.3 / 9.8

2. System Design

Outdoor unit changes

The capacity of the indoor units 1, 2 and 3 is lower than the maximum load.
Increase the capacity of the outdoor unit by one rank because of inability to increase the indoor unit 1 by one rank.

	Outdoor unit	Room1 (indoor unit 1)	Room2 (indoor unit 2)	Room3 (indoor unit 3)	Room4 (indoor unit 4)
Selected model	U-20ME1E81	Type 160	Type 140	Type 140	Type 106
Load (cooling / heating) (kW)	-	14.0	12.0	12.0	7.0
Rated capacity (cooling / heating) (kW)	56.0 / 63.0	16.0 / 18.0	14.0 / 16.0	14.0 / 16.0	10.6 / 11.4
Corrected capacity (cooling / heating) (kW)	45.8 / 50.4	14.4 / 17.0	12.3 / 15.0	12.2 / 14.9	8.9 / 10.5
Actual capacity (cooling / heating) (kW)	-	14.4 / 17.0	12.3 / 15.0	12.2 / 14.9	8.9 / 10.5

2. System Design

(3) Increasing the size of the refrigerant tubing

■ Increasing the tubing size of the gas tubes can reduce the loss of capacity caused by longer tubing lengths. Refer to Table 2-10-3 to increase the tubing size. However, the maximum allowable tubing length must not be exceeded.

* The amount of additional refrigerant charge is determined from the liquid tube size only.

Table 2-10-3 Equivalent Length Correction Coefficient when the Size of the Gas Tubes (LM) is Increased

Standard tubing diameter (gas tube, mm)	ø12.7	ø15.88	ø19.05	ø22.22	ø25.4	ø28.58	ø31.75	ø38.1
Tubing diameter after change (gas tube, mm)	ø15.88	ø19.05	ø22.22	ø25.4	ø28.58	ø31.75	ø38.1	ø41.28
Equivalent length correction coefficient	0.4		0.5			0.6		0.7

* If the size of the gas tubes (LM) have been increased, apply the correction coefficient from Table 2-10-3 and calculate the equivalent length of the LM section.

Equivalent length of tubing after size increase
= Standard tubing equivalent length × Equivalent length correction coefficient

2

2-2. Example of Tubing Size Selection for Extension and Additional Charge Amount

● Sample calculation for the system below

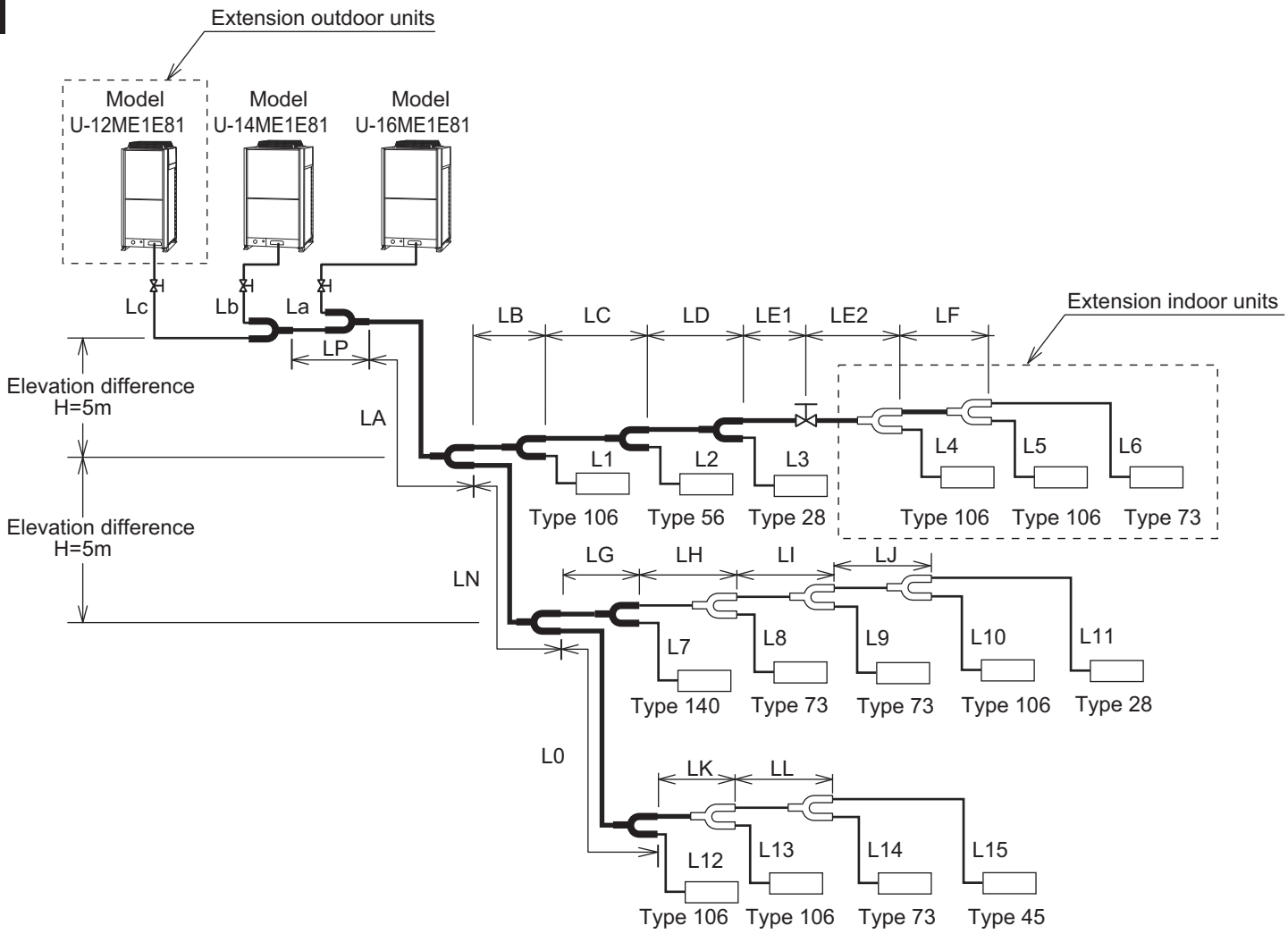

2. System Design

Additional refrigerant charge before extension

	Liquid tube diameter	Tubing length (m) (A)	Additional refrigerant charge per 1 m (kg/m) (B)	(A) × (B) kg
La	ø12.7	2	0.128	0.256
Lb	ø12.7	1	0.128	0.128
Lc	ø9.52	1	0.056	0.056
LP	ø15.88	20	0.185	3.700
LA	ø19.05	5	0.259	1.295
LB	ø15.88	6	0.185	1.110
LC	ø12.7	6	0.128	0.768
LD	ø12.7	0.4	0.128	0.051
LE1	ø9.52	5	0.056	0.280
LN	ø15.88	3	0.185	0.555
LG	ø12.7	3	0.128	0.384
LH	ø9.52	4	0.056	0.224
LI	ø9.52	5	0.056	0.280
LJ	ø9.52	5	0.056	0.280
LK	ø12.7	2	0.128	0.256
LL	ø9.52	3	0.056	0.168
LM	ø9.52	4	0.056	0.224
L1	ø9.52	3	0.056	0.168
L2	ø6.35	3	0.026	0.078
L3	ø6.35	3	0.026	0.078
L7	ø9.52	3	0.056	0.168
L8	ø9.52	3	0.056	0.168
L9	ø9.52	4	0.056	0.224
L10	ø6.35	4	0.026	0.104
L11	ø6.35	6	0.026	0.156
L12	ø9.52	4	0.056	0.224
L13	ø9.52	4	0.056	0.224
L14	ø9.52	4	0.056	0.224
L15	ø6.35	6	0.026	0.156
Total (kg)				11.987

→ 11.99 kg

Additional refrigerant charge after extension

	Liquid tube diameter	Tubing length (m) (A)	Additional refrigerant charge per 1 m (kg/m) (B)	(A) × (B) kg
LE2	ø9.52	4	0.056	0.224
LF	ø9.52	5	0.056	0.280
L4	ø9.52	4	0.056	0.224
L5	ø9.52	6	0.056	0.336
L6	ø9.52	7	0.056	0.392
Total (kg)				1.4560

→ 1.46 kg

Calculation of additional refrigerant charge for the entire 2-WAY system

(Additional refrigerant charge for entire 2-WAY system)
= (Refrigerant charge at outdoor unit)
+ (Necessary amount of additional refrigerant charge per outdoor unit)
+ [Additional total refrigerant charge (before extension + after extension)]
= [(8.5 + 8.5 + 6.8 =23.8) refrigerant charge at outdoor unit]
+ [(7.8 + 7.8 + 6.6 =22.2) necessary amount of additional refrigerant charge per outdoor unit]
+ [(11.99+1.46 =13.36) additional total refrigerant charge]
= 59.36 (after extension)

[Before extension : (8.5 + 8.5 =17.0) + (7.8 + 7.8 =15.6) + 11.99 = 44.59 kg]

2. System Design

■ Checking of limit density

The limit density judgment is made based on the room with the indoor unit having the smallest capacity in the system after extension.

The volume of the room where a type 28 indoor unit is used (connected to tubing L11) is calculated as follows :

floor area 15m^2 x ceiling height 2.7m = room volume 40.5m^3.

Due to the room volume,

Maximum overall refrigerant charge amount

= (room volume) × (limit density)

= 40.5(m^3) × 0.3(kg/m^3)

= 12.15kg

From the graph at right, the minimum room volume for 59.36 kg of refrigerant is 197.9 m^3 (floor area 73.3 m^2).

Required minimum room volume

= (overall refrigerant charge amount) ÷ (limit density)

= 59.36(kg) ÷ 0.3(kg/m^3)

= 197.9(m^3)

Required minimum floor area

= (minimum room volume) ÷ (ceiling height)

= 197.9 (m^3) ÷ 2.7(m)

= 73.3(m^2)

Therefore an opening for ventilation is required.

< Formula for computation >

$$\frac{\textbf{Overall refrigerant charge amount for the air conditioner : kg}}{\textbf{(Minimum room volume for indoor unit: m}^3\textbf{)}}$$

$$= \frac{59.36\ (\text{kg})}{40.5\ (\text{m}^3)} = 1.47\ (\text{kg/m}^3) > 0.30\ (\text{kg/m}^3)$$

Accordingly, it is necessary to install a ventilation fan for this room.

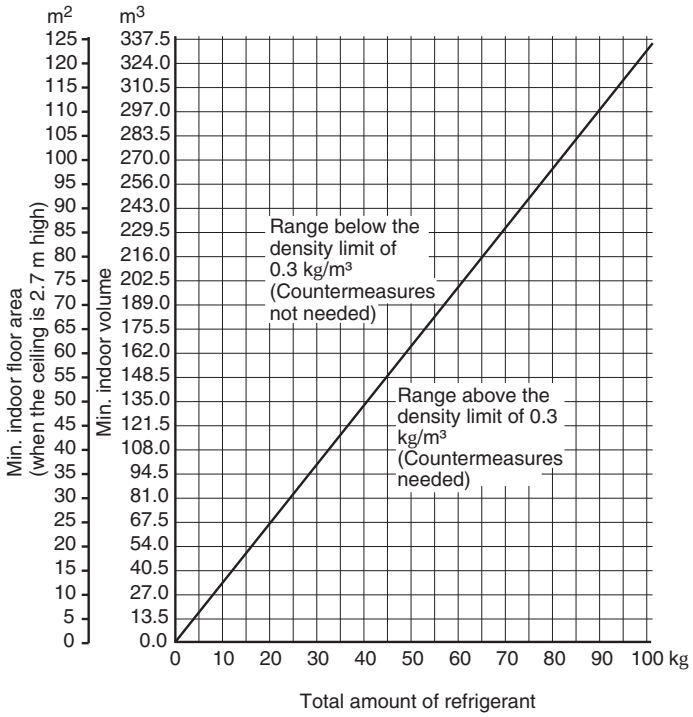

WARNING **Always check the gas density limit for the room in which the unit is installed.**

■ Check of Limit Density

When installing an air conditioner in a room, it is necessary to ensure that even if the refrigerant gas accidentally leaks out, its density does not exceed the limit level for that room.

If the density could exceed the limit level, it is necessary to provide an opening between the unit and the adjacent room, or to install mechanical ventilation which is interlocked with the leak detector.

$$\frac{\textbf{Overall refrigerant charge amount for the air conditioner : kg}}{\textbf{(Minimum room volume for indoor unit: m}^3\textbf{)}} \leq \textbf{Limit density 0.3 (kg/m}^3\textbf{)}$$

The limit density of refrigerant which is used in this unit is 0.3 kg/m^3 (ISO 5149).

The shipped outdoor unit comes charged with the amount of refrigerant fixed for each type, so add it to the amount that is charged in the field. (For the refrigerant charge amount at shipment, refer to the unit's nameplate.)

CAUTION **Pay special attention to any location, such as a basement, etc., where leaking refrigerant can accumulate, since refrigerant gas is heavier than air.**

2. System Design

■ Installing distribution joint

(1) Refer to “HOW TO ATTACH DISTRIBUTION JOINT” enclosed with the optional distribution joint kit (CZ-P680PJ2, P1350PJ2, P160BK2, P680BK2, P1350BK2).

(2) When creating a branch using a commercially available T-joint (header joint system), orient the main tubing so that it is either horizontal (level) or vertical. In order to prevent accumulation of refrigerant oil in stopped units, if the main tubing is horizontal then each branch tubing length should be at an angle that is greater than horizontal. If the main tubing is vertical, provide a raised starting portion for each branch.

[Header joint system]

- Be sure to solidly weld shut the T-joint end (marked by “X” in the figure). In addition, pay attention to the insertion depth of each connected tube so that the flow of refrigerant within the T-joint is not impeded.
- When using the header joint system, do not make further branches in the tubing.
- Do not use the header joint system on the outdoor unit side.

(3) If there are height differences between indoor units or if branch tubing that follows a distribution joint is connected to only 1 unit, a trap or ball valve must be added to that distribution joint. (When adding the ball valve, locate it within 40 cm of the distribution joint.)
If a trap or ball valve is not added, do not operate the system before repairs to a malfunctioning unit are completed. (The refrigerant oil sent through the tubing to the malfunctioning unit will accumulate and may damage the compressor.)

Tube branching methods (horizontal use)

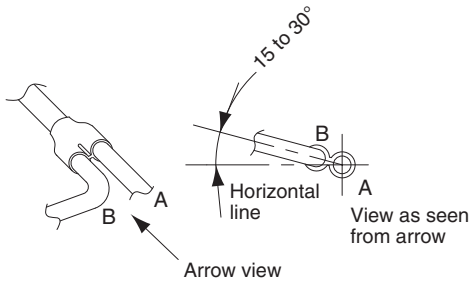

Header joint system (Indoor)

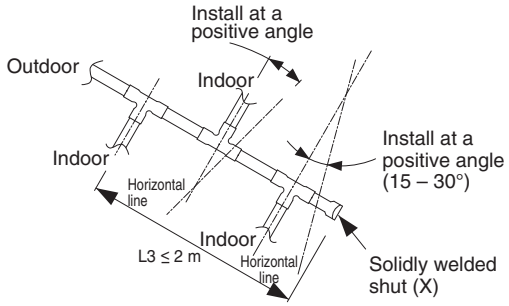

Types of vertical trap specifications

(When using ball valve)

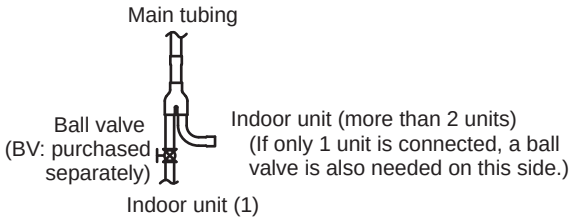

(When not using ball valve)

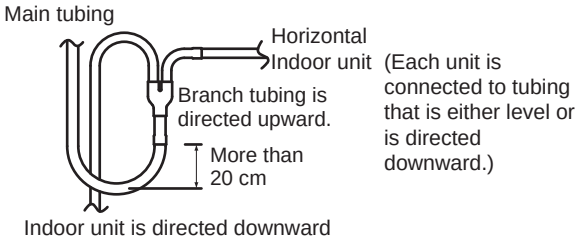

3. Electrical Wiring

3-1. General Precautions on Wiring

(1) Before wiring, confirm the rated voltage of the unit as shown on its nameplate, then carry out the wiring closely following the wiring diagram.
(2) Provide a power outlet to be used exclusively for each unit, and a power supply disconnect, circuit breaker and earth leakage breaker for overcurrent protection should be provided in the exclusive line.
(3) To prevent possible hazards from insulation failure, the unit must be grounded.
(4) Each wiring connection must be done in accordance with the wiring system diagram. Wrong wiring may cause the unit to misoperate or become damaged.
(5) Do not allow wiring to touch the refrigerant tubing, compressor, or any moving parts of the fan.
(6) Unauthorized changes in the internal wiring can be very dangerous. The manufacturer will accept no responsibility for any damage or misoperation that occurs as a result of such unauthorized changes.
(7) Regulations on wire diameters differ from locality to locality. For field wiring rules, please refer to your LOCAL ELECTRICAL CODES before beginning. You must ensure that installation complies with all relevant rules and regulations.
(8) To prevent malfunction of the air conditioner caused by electrical noise, care must be taken when wiring as follows:
- The remote control wiring and the inter-unit control wiring should be wired apart from the inter-unit power wiring.
- Use shielded wires for inter-unit control wiring between units and ground the shield on both sides.

(9) If the power supply cord of this appliance is damaged, it must be replaced by a repair shop appointed by the manufacturer, because special purpose tools are required.
(10) Use a waterproof conduit for outdoor unit wiring to avoid damaging the wire and to prevent accumulation of liquid inside the unit.

3-2. Recommended Wire Length and Wire Diameter for Power Supply System

Outdoor unit

	(A) Power supply		Time delay fuse or circuit capacity		(A) Power supply		Time delay fuse or circuit capacity
	Wire size	Max. length			Wire size	Max. length	
U-8ME1E81	4 mm²	56 m	25 A		6 mm²	84 m	35 A
U-10ME1E81	4 mm²	46 m	25 A		6 mm²	69 m	35 A
U-12ME1E81	6 mm²	65 m	35 A	or	6 mm²	65 m	35 A
U-14ME1E81	10 mm²	91 m	35 A		10 mm²	91 m	50 A
U-16ME1E81	10 mm²	75 m	45 A		10 mm²	75 m	50 A
U-18ME1E81	10 mm²	70 m	50 A		10 mm²	70 m	50 A
U-20ME1E81	10 mm²	58 m	50 A		10 mm²	58 m	50 A

Indoor unit

Type	(B) Power supply		Time delay fuse or circuit capacity
	Minimum 2 mm²	2.5 mm²	
K2	Max. 150 m	—	15 A
Y2	Max. 130 m	—	15 A
K1	—	Max. 150 m	10 – 16 A
D1, L1, U1, Y1, T1, F1, M1, P1, R1	—	Max. 130 m	10 – 16 A
E1 (73, 106, 140)	—	Max. 60 m	10 – 16 A
E1 (224)	—	Max. 50 m	10 – 16 A
E1 (280)	—	Max. 30 m	10 – 16 A

Control wiring

(C) Inter-unit (between outdoor and indoor units) control wiring			(D) Remote control wiring
0.75 mm² (AWG #18) **Use shielded wiring***	or	2.0 mm² (AWG #14) **Use shielded wiring***	0.75 mm² (AWG #18)
Max. 1,000 m		Max. 2,000 m	Max. 500 m

NOTE * With ring-type wire terminal.

(E) Control wiring for group control	(F) Inter-outdoor unit control wiring
0.75 mm² (AWG #18)	0.75 mm² (AWG #18) **Use shielded wiring**
Max. 200 m (Total)	Max. 300 m

3. Electrical Wiring

3-3. Wiring System Diagrams

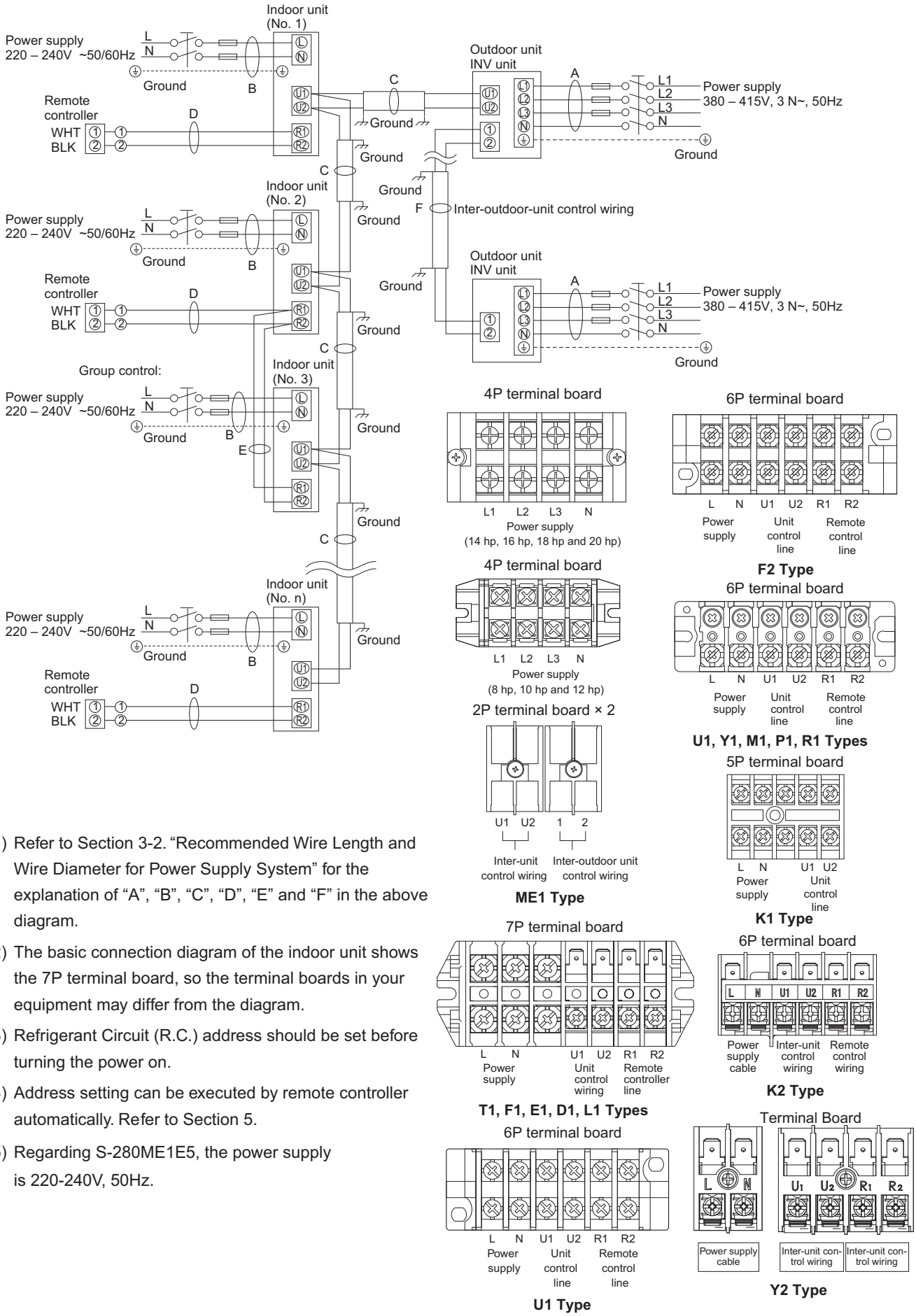

(1) Refer to Section 3-2. “Recommended Wire Length and Wire Diameter for Power Supply System” for the explanation of “A”, “B”, “C”, “D”, “E” and “F” in the above diagram.

(2) The basic connection diagram of the indoor unit shows the 7P terminal board, so the terminal boards in your equipment may differ from the diagram.

(3) Refrigerant Circuit (R.C.) address should be set before turning the power on.

(4) Address setting can be executed by remote controller automatically. Refer to Section 5.

(5) Regarding S-280ME1E5, the power supply is 220-240V, 50Hz.

3. Electrical Wiring

CAUTION

(1) When linking outdoor units in a network, disconnect the terminal extended from the short plug (CN072, 2P Black, location: right bottom on the outdoor main control PCB) from all outdoor units except any one of the outdoor units.
(When shipping: In shorted condition.)
For a system without link (no connection wiring between outdoor units), do not remove the short plug.

(2) Do not install the inter-unit control wiring in a way that forms a loop. (Fig. 2-2)

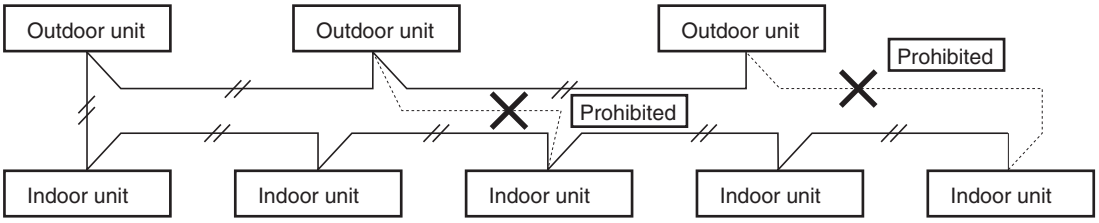

Fig. 2-2

2

(3) Do not install inter-unit control wiring such as star branch wiring. Star branch wiring causes misaddress setting.

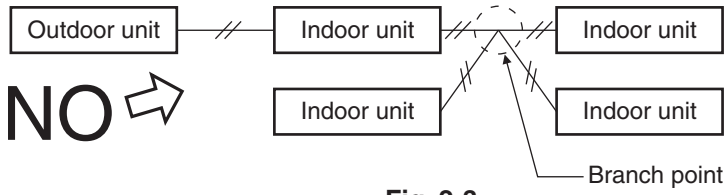

Fig. 2-3

(4) If branching the inter-unit control wiring, the number of branch points should be 16 or fewer. (Branches less than 1 m are not included in the total branch number.) (Fig. 2-4)

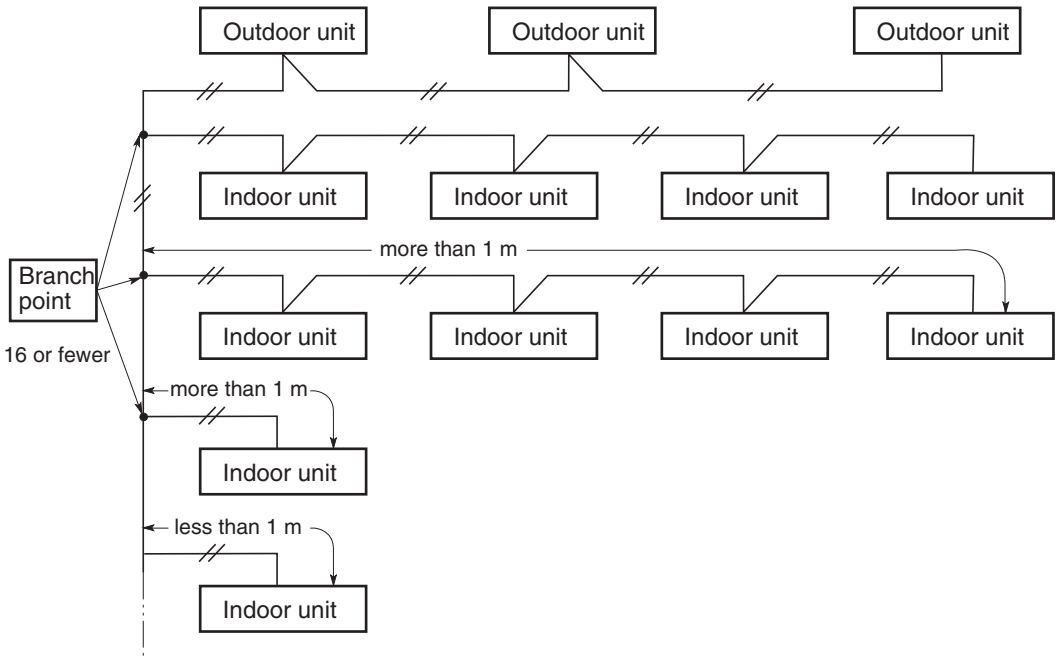

Fig. 2-4

3. Electrical Wiring

(5) Use shielded wires for inter-unit control wiring (c) and ground the shield on both sides, otherwise misoperation from noise may occur. (Fig. 2-5) Connect wiring as shown in Section "3-3. Wiring System Diagram."

(6) Use the standard power supply cables for Europe (such as H05RN-F or H07RN-F which conforms to CENELEC (HAR) rating specifications) or use the cables based on IEC standard. (60245 IEC57, 60245 IEC66)

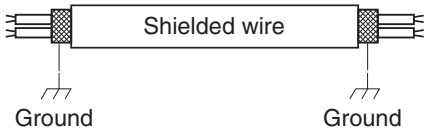

Fig. 2-5

WARNING

Loose wiring may cause the terminal to overheat or result in unit malfunction. A fire hazard may also exist. Therefore, ensure that all wiring is tightly connected.

When connecting each power wire to the terminal, follow the instructions on "How to connect wiring to the terminal" and fasten the wire securely with the fixing screw of the terminal plate.

How to connect wiring to the terminal

■ For stranded wiring

(1) Cut the wire end with cutting pliers, then strip the insulation to expose the stranded wiring about 10 mm and tightly twist the wire ends. (Fig. 2-6)

(2) Using a Phillips head screwdriver, remove the terminal screw(s) on the terminal plate.

(3) Using a ring connector fastener or pliers, securely clamp each stripped wire end with a ring pressure terminal.

(4) Place the ring pressure terminal, and replace and tighten the removed terminal screw using a screwdriver. (Fig. 2-7)

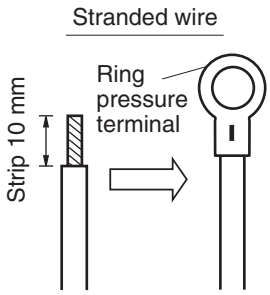

Fig. 2-6

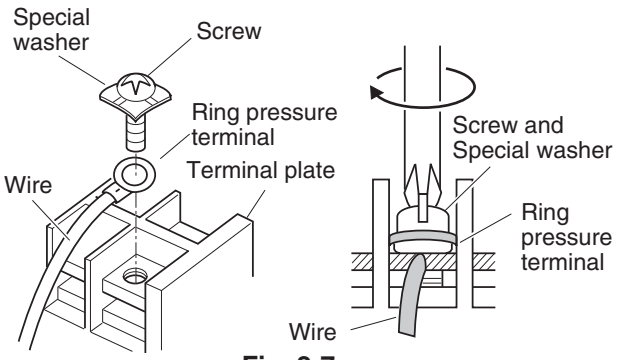

Fig. 2-7

■ Examples of shield wires

(1) Remove cable coat not to scratch braided shield. (Fig. 2-8)

(2) Ravel braided shield carefully and put tightly braided shield together.
Coat with insulation tube or wrap insulation tape after putting tightly. (Fig. 2-9)

(3) Remove coat of signal wire. (Fig. 2-10)

(4) Connect signal wire removed coat and shield wire with pressure terminal. (Fig. 2-11)

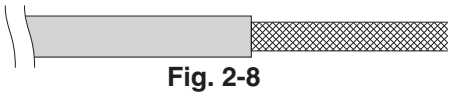

Fig. 2-8

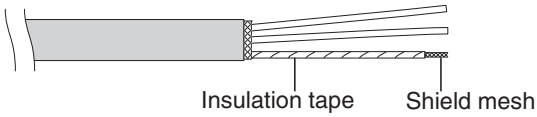

Fig. 2-9

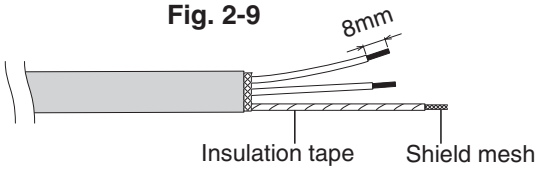

Fig. 2-10

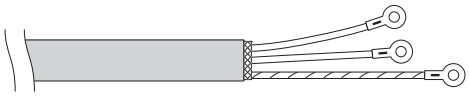

Fig. 2-11

■ Earth wire for power supply

The earth wire should be longer than the other lead wires for electrical safety.

3. Electrical Wiring

■ Wiring sample

Outdoor Unit : ME1 Type

1.

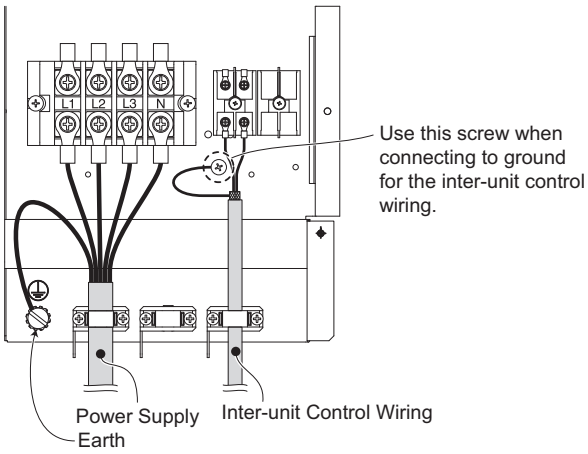

2.

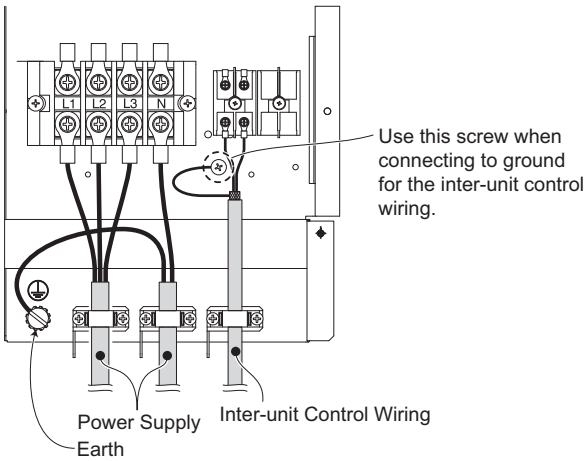

3.

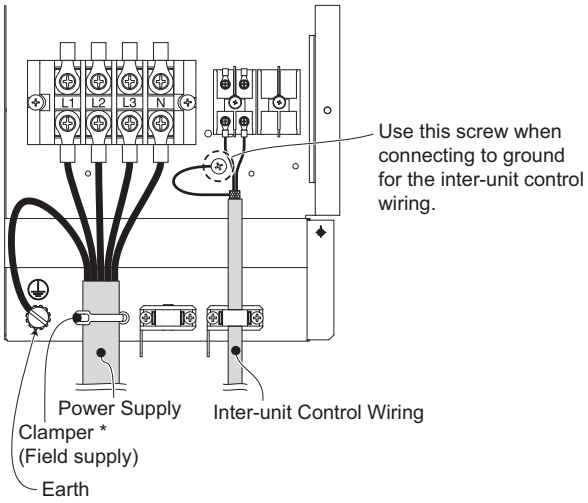

* First remove the attached resin fixture.
Then lead the clamper (field supply) through the screw hole and fix the power supply wire.

4.

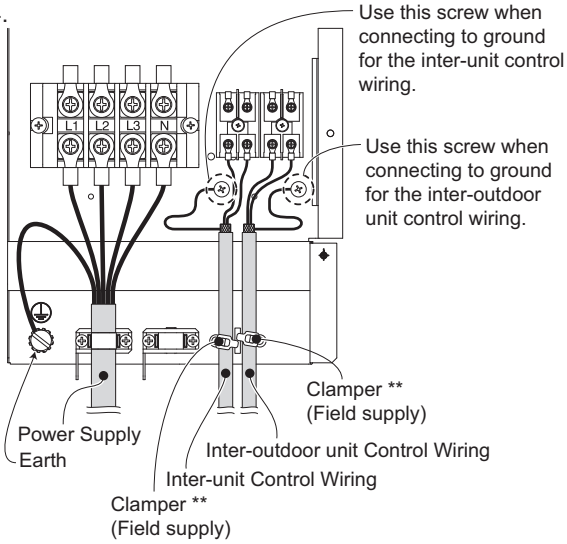

** First remove the attached resin fixture.
Then lead the clamper (field supply) through the screw hole and square hole from top to bottom or vice versa.
Finally fix each inter-outdoor unit control wire and the inter-unit control wire separately with the clamper (field supply).

NOTE

- Fix the wires with the clamper (field supply) to the wiring fixture plates (2 locations) and do not allow the refrigerant tubing to touch the compressor.
- Use a waterproof conduit for outdoor unit wiring to avoid damaging the wire and to prevent accumulation of liquid inside the unit.

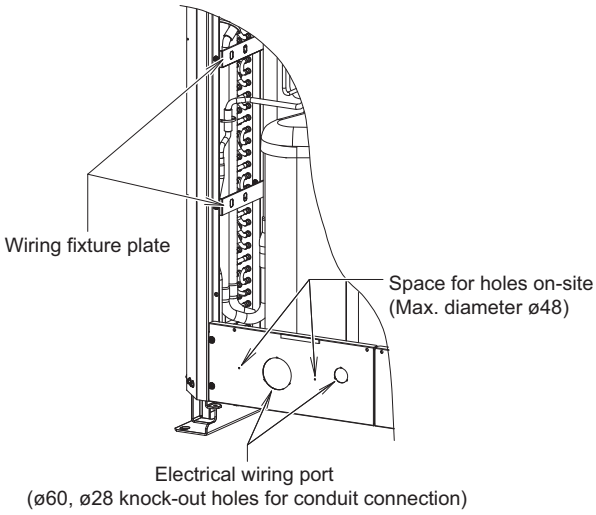

U1 type

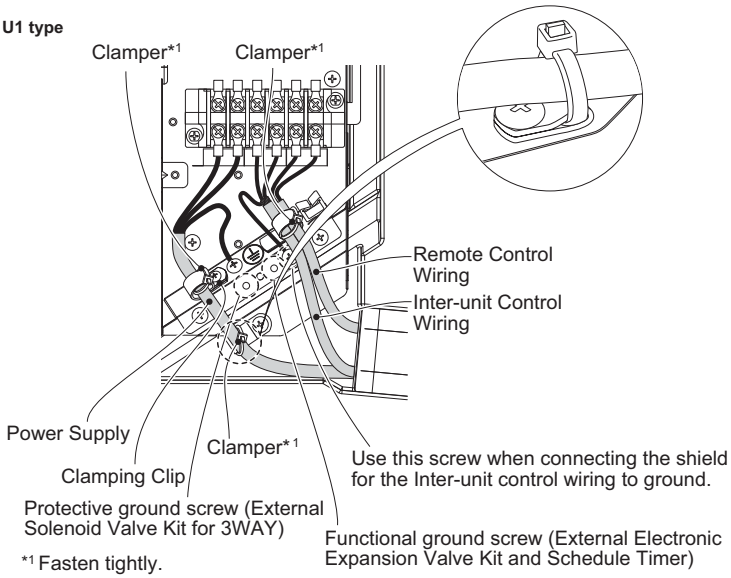

*1 Fasten tightly.

3. Electrical Wiring

■ Wiring sample

Indoor Unit : E1 Type (73, 106, 140)

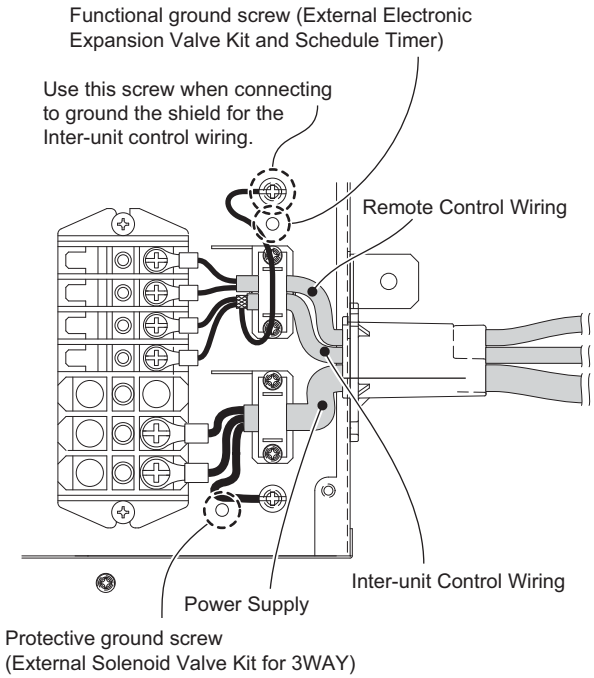

Indoor Unit : E1 Type (224, 280)

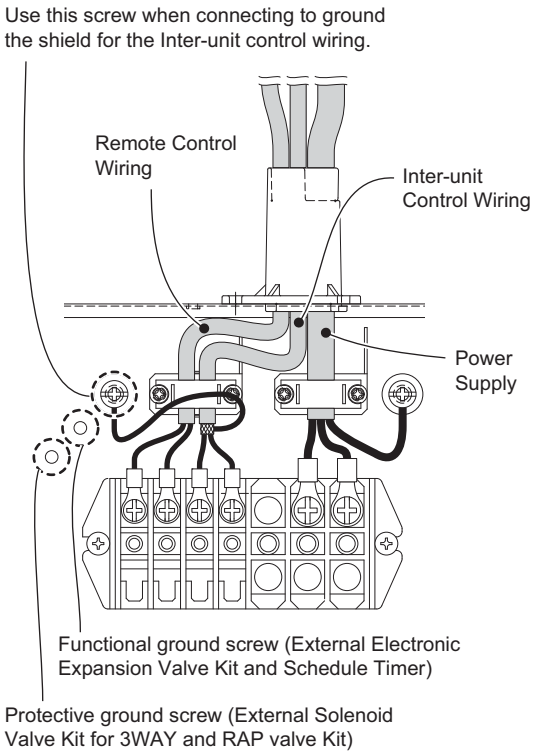

Indoor Unit : Y1 Type

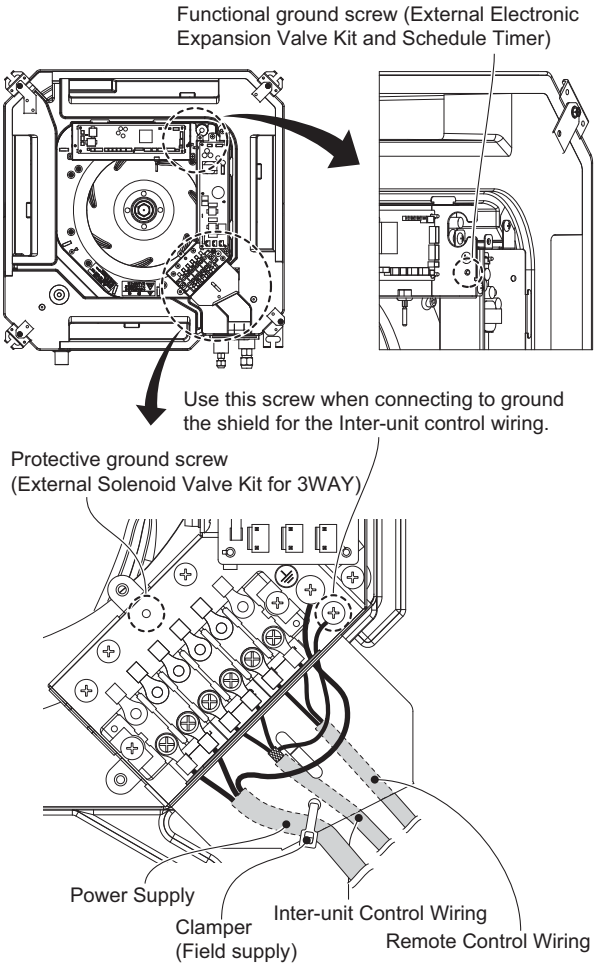

Indoor Unit : M1 Type

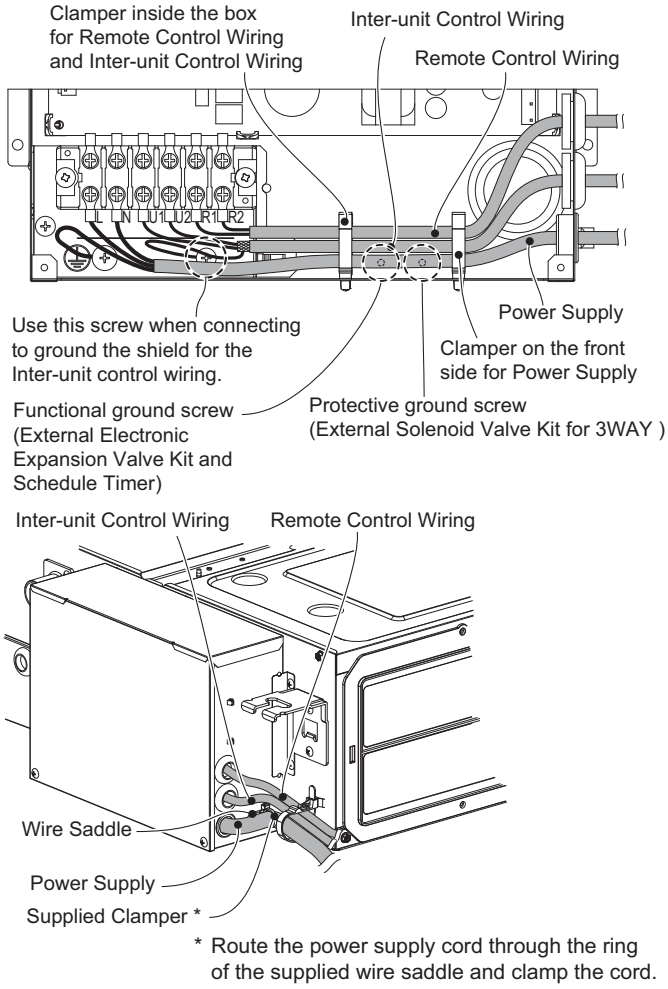

* Route the power supply cord through the ring of the supplied wire saddle and clamp the cord.

3. Electrical Wiring

■ Wiring sample

Indoor Unit : F1 Type

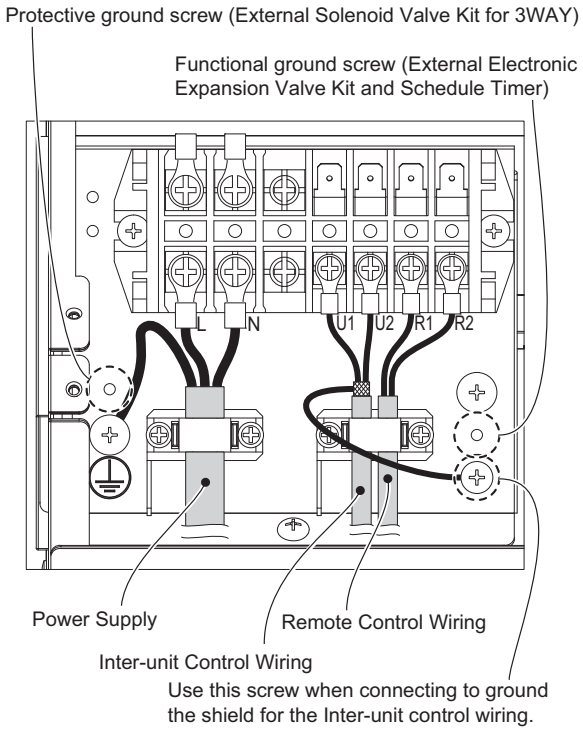

Indoor Unit : F2 type

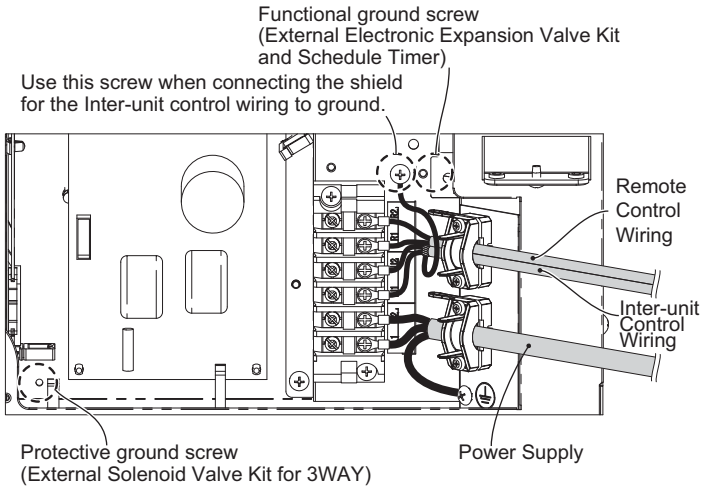

Indoor Unit : D1 Type

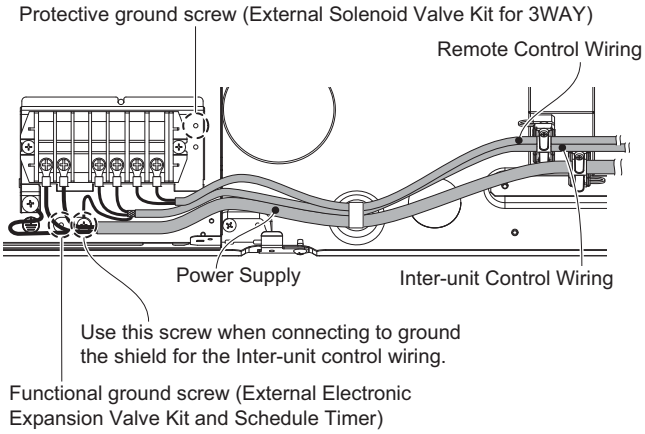

Indoor Unit : P1 and R1 Types

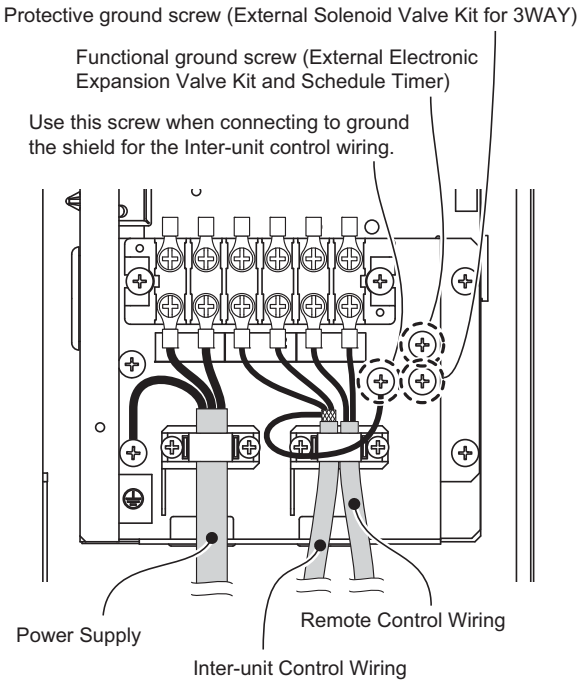

3. Electrical Wiring

■ Wiring sample

Indoor Unit : K1 Type (22, 28, 36)

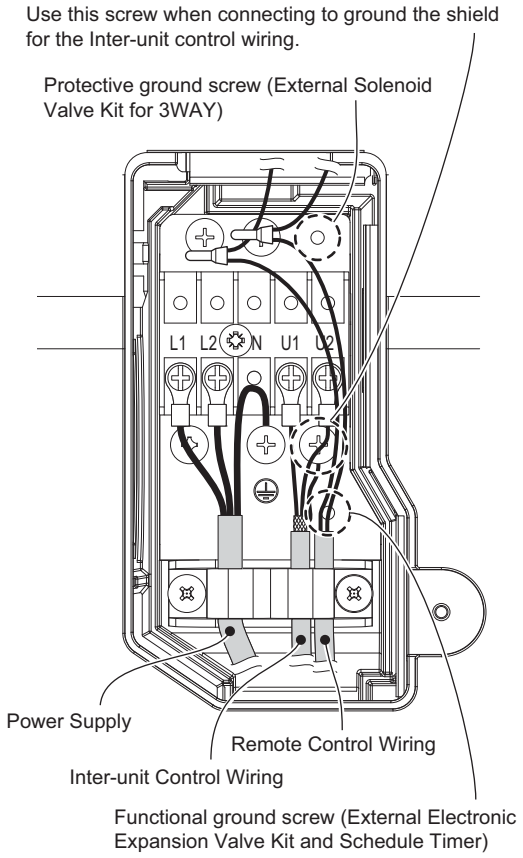

Indoor Unit : K1 Type (45, 56, 73, 106)

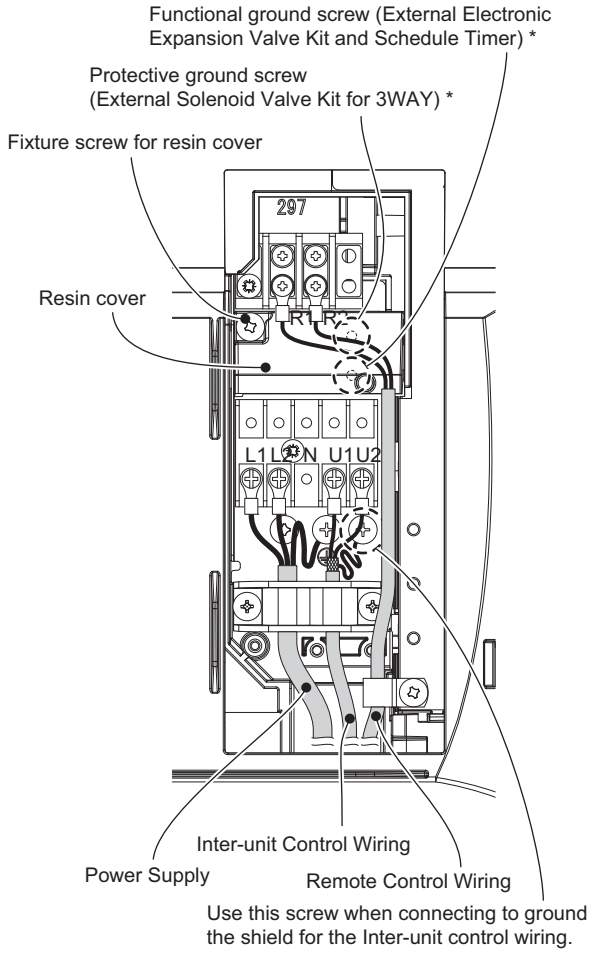

* As to functional ground screw and protective ground screw, remove the fixture screw and resin cover.
Then, carry out earth ground work.

Indoor Unit : L1 Type

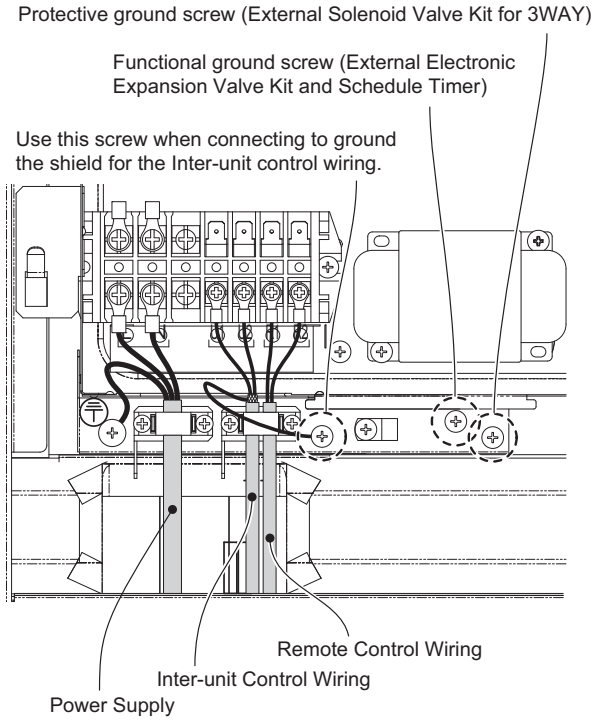

Indoor Unit : T1 type

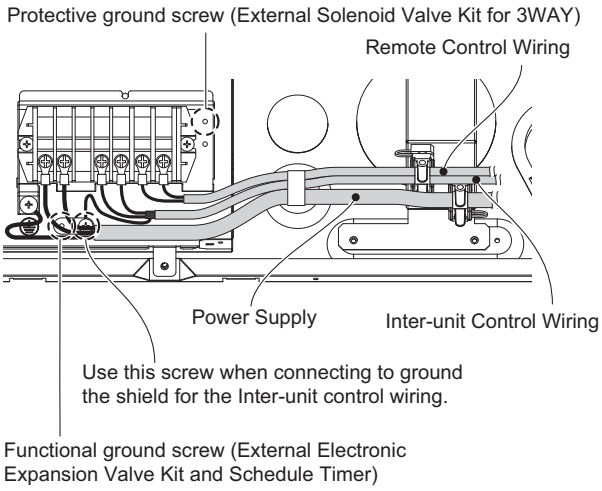

3. Electrical Wiring

■ Wiring sample

Indoor Unit : Y2 Type

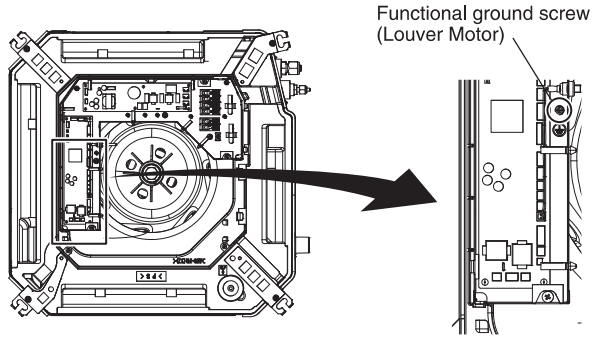

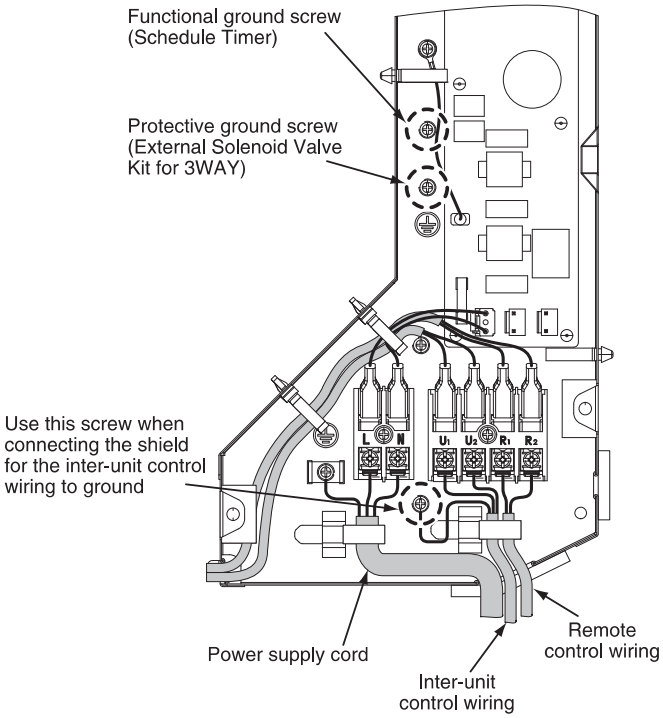

Indoor Unit : K2 Type

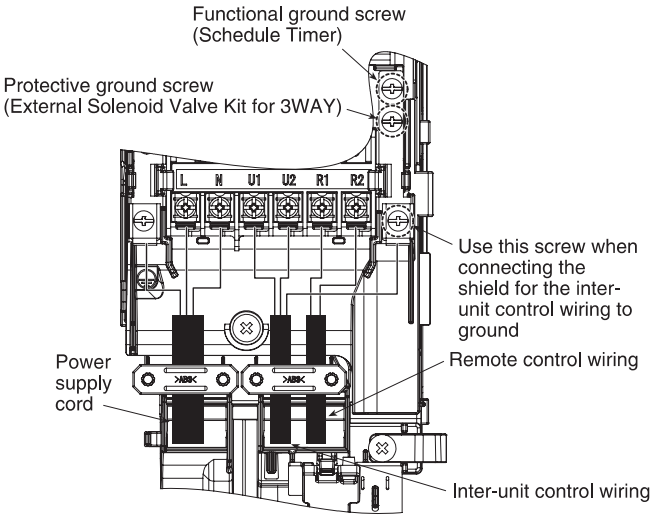

4. Installation Instructions

4-1. Selecting the Installation Site for Outdoor Unit

AVOID:

- heat sources, exhaust fans, etc.
- damp, humid or uneven locations
- indoors (no-ventilation location)

DO:

- choose a place as cool as possible.
- choose a place that is well ventilated.
- allow enough room around the unit for air intake/ exhaust and possible maintenance.

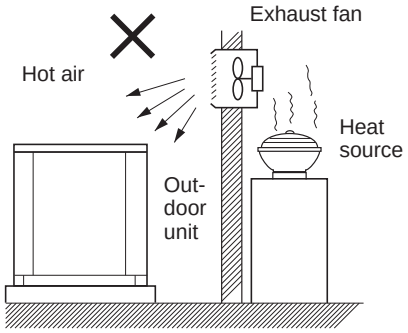

Fig. 2-12

Installation Space

Install the outdoor unit where there is enough space for ventilation. Otherwise the unit may not operate properly. Fig. 2-13 shows the minimum space requirement around the outdoor units when 3 sides are open and only 1 side is shuttered, with open space above the unit. The mounting base should be concrete or a similar material that allows for adequate drainage. Make provisions for anchor bolts, platform height, and other site-specific installation requirements.

Example of installation of 2 units
(when 3 sides are open and only 1 side is shuttered)

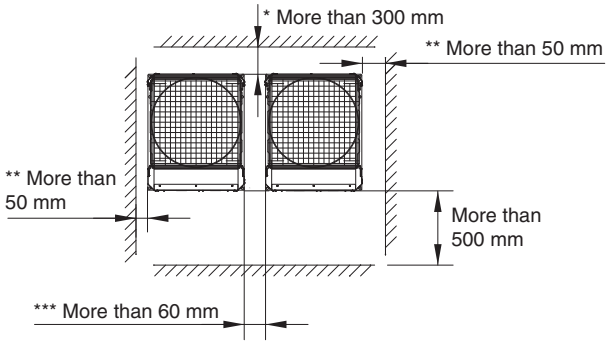

* Make a walk-in space behind the unit to erase maintenance and servicing.

** When setting the anchor bolt to position “B” or “C” (See Fig. 2-14), make the space between the unit and the wall more than 250 mm for installation operation.

*** When setting the anchor bolt to position “B” or “C” (See Fig. 2-14), make the space between the outdoor units more than 180 mm for installation operation.

Fig. 2-13

CAUTION

- **Leave space open above the unit.**
- **Construct louvers or other openings in the wall, if necessary, to ensure adequate ventilation.**

NOTE

- Do not do any wiring or tubing within 30 cm of the front panel, because this space is needed as a servicing space for the compressor.
- Ensure a base height of 100 mm or more to ensure that drainage water does not accumulate and freeze around the bottom of the unit.
- If installing a drain pan, install the drain pan prior to installing the outdoor unit.

* Make sure there is at least 150 mm between the outdoor unit and the ground.
Also, the direction of the tubing and electrical wiring should be from the front of the outdoor unit.

4. Installation Instructions

Unit: mm

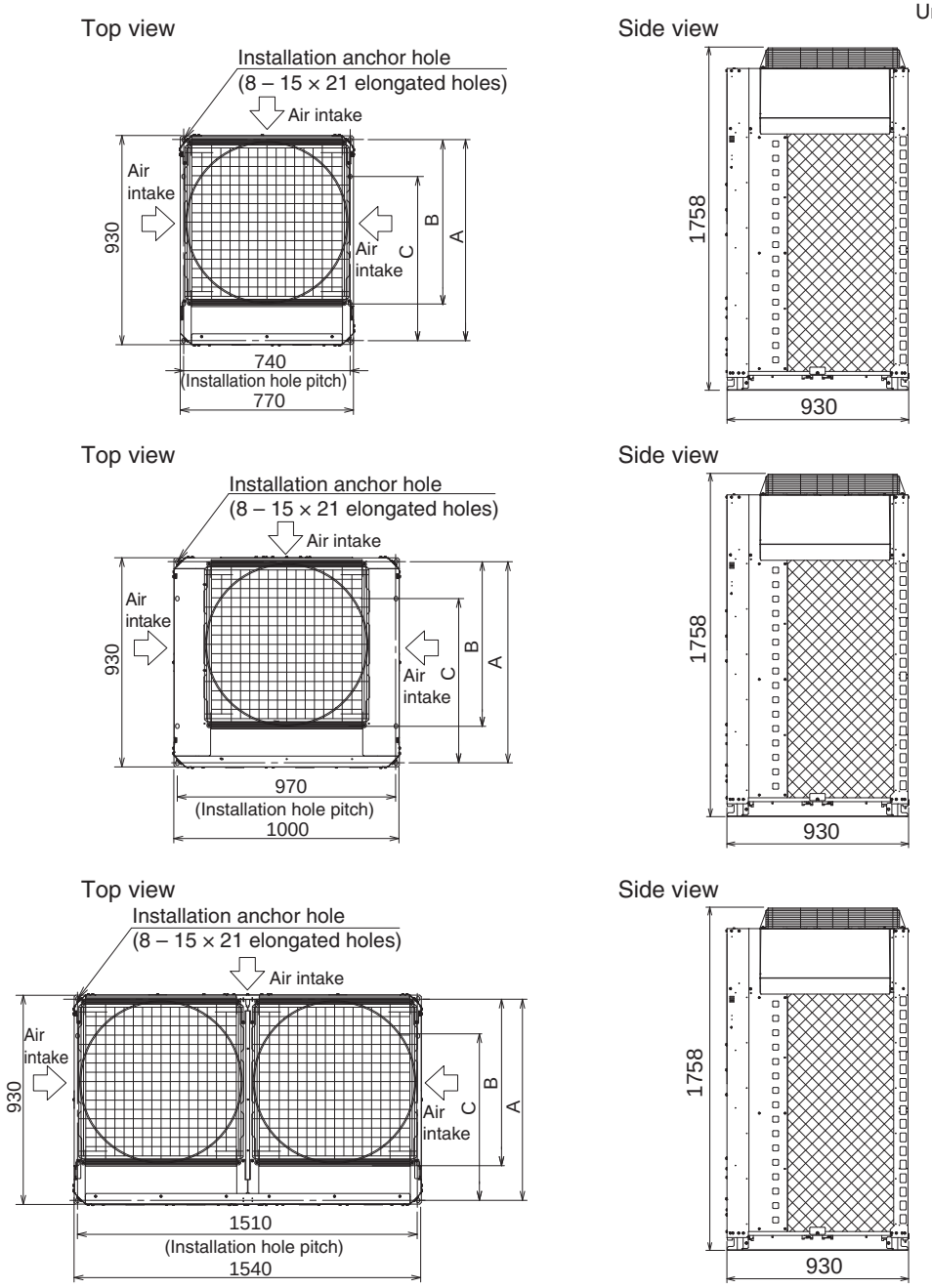

* According to the installation site, you may choose the setting position in the depth direction of the anchor bolt from “A”, “B” or “C”.
A : 894 (Installation hole pitch) * For removing tube forward
B : 730 (Installation hole pitch) * For removing the tube downward
C : 730 (Installation hole pitch)

Fig. 2-14

4. Installation Instructions

4-2. Shield for Horizontal Exhaust Discharge

It is necessary to install an air-discharge chamber (field supply) to direct exhaust from the fan horizontally if it is difficult to provide a minimum space of 2 m between the air-discharge outlet and a nearby obstacle. (Fig. 2-15)

CAUTION **In regions with heavy snowfall, the outdoor unit should be provided with a solid, raised platform and snow-proof vents. (Fig. 2-16)**

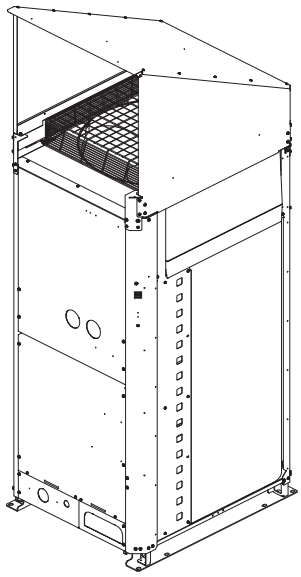

Fig. 2-15

4-3. Installing the Outdoor Unit in Heavy Snow Areas

In locations where wind-blown snow can be a problem, snow-proof vents should be fitted to the unit and direct exposure to the wind should be avoided as much as possible. (Fig. 2-17)
The following problems may occur if proper countermeasures are not taken:

- The fan in the outdoor unit may stop running, causing the unit to be damaged.
- There may be no air flow.
- The tubing may freeze and burst.
- The condenser pressure may drop because of strong wind, and the indoor unit may freeze.

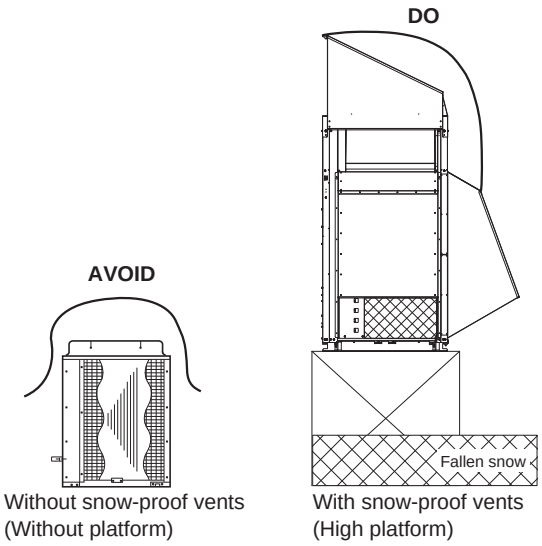

Fig. 2-16

4-4. Precautions When Installing in Heavy Snow Areas

a) The platform should be higher than the maximum snow depth. (Fig. 2-17)
b) The 2 anchoring feet of the outdoor unit should be used for the platform, and the platform should be installed beneath the air-intake side of the outdoor unit.
c) The platform foundation must be solid and the unit must be secured with anchor bolts.
d) When installing on a roof subject to strong wind, countermeasures must be taken to prevent the unit from being overturned.

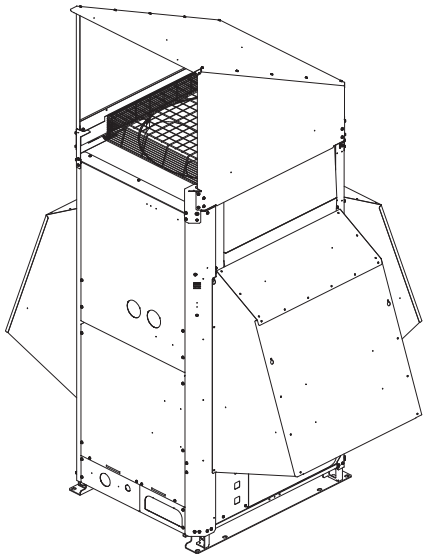

Fig. 2-17

4. Installation Instructions

4-5. Dimensions of Wind Ducting

Reference diagram for air-discharge chamber (field supply)

Can be installed so that the air direction is to the front, right, left or rear direction.
According to the installation site, you may choose the setting position in the depth direction of the anchor bolt from “A”, “B” or “C”.
Regarding the field supply parts for the detail diagrams, refer to the section “9. Supplement”.

Model : U-8ME1E81, 10ME1E81, 12ME1E81

unit: mm

Air direction: Front direction

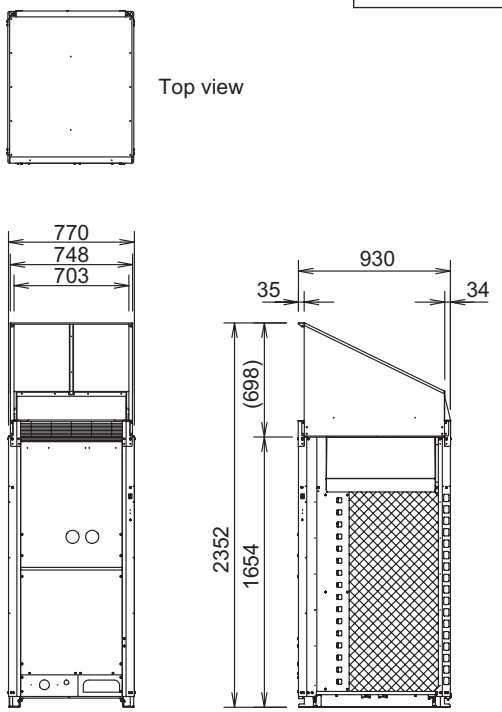

Air direction: Rear direction

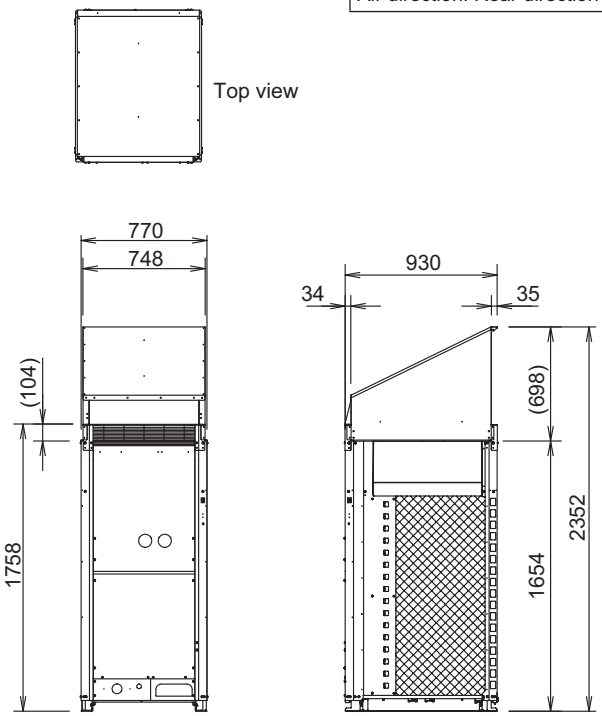

Model : U-14ME1E81, 16ME1E81

unit: mm

Air direction: Front direction

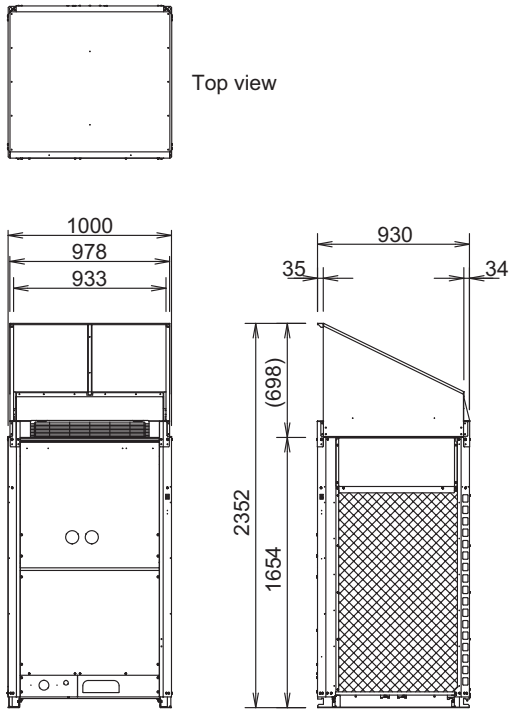

Air direction: Rear direction

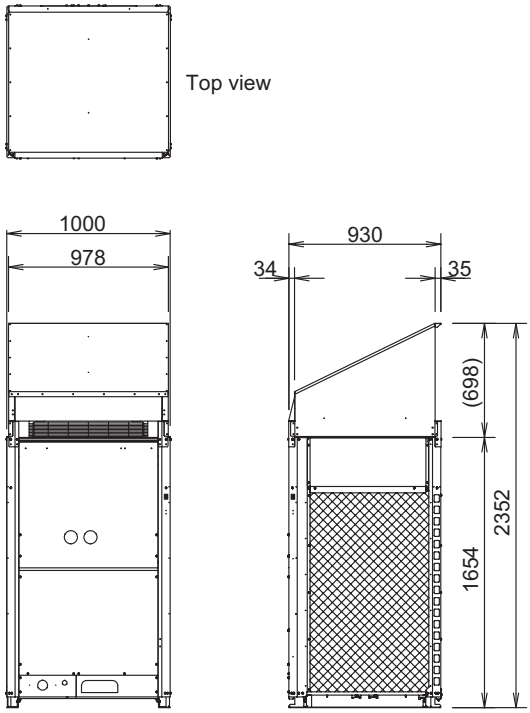

4. Installation Instructions

Reference diagram for air-discharge chamber (field supply)

Can be installed so that the air direction is to the front, right, left or rear direction.
According to the installation site, you may choose the setting position in the depth direction of the anchor bolt from “A”, “B” or “C”.
Regarding the field supply parts for the detail diagrams, refer to the section “9. Supplement”.

Model : U-18ME1E81, 20ME1E81

unit: mm

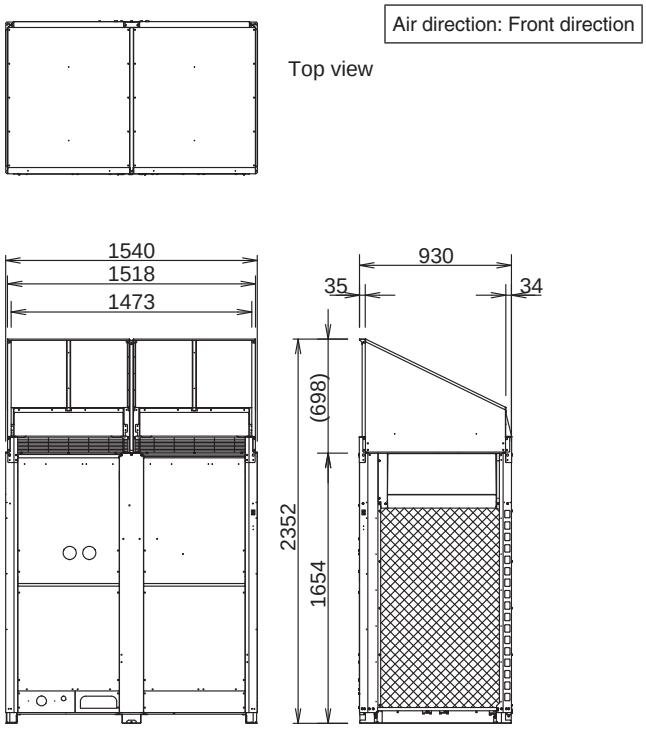

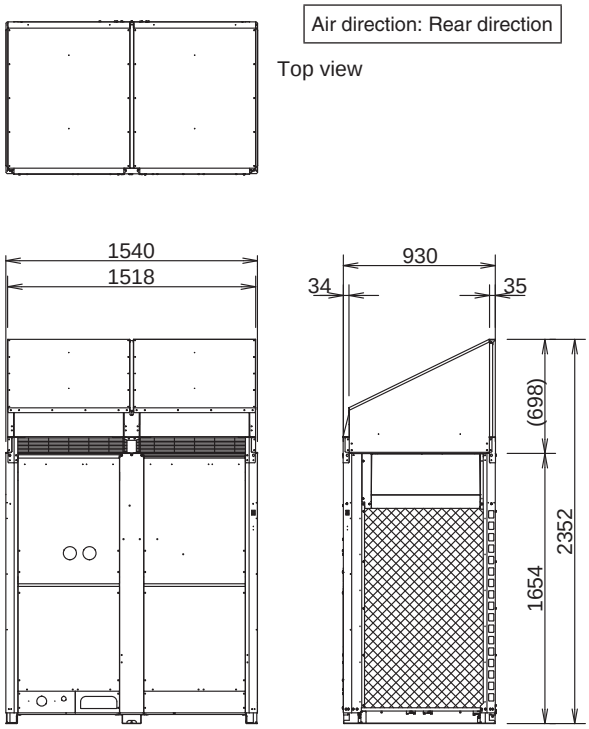

2

4. Installation Instructions

Reference diagram for air-discharge chamber (field supply) (continued)

Unit combinations for Standard-COP mode

Can be installed so that the air direction is to the front, right, left or rear direction.
According to the installation site, you may choose the setting position in the depth direction of the anchor bolt from “A”, “B” or “C”.
Regarding the field supply parts for the detail diagrams, refer to the section “9. Supplement”.

Diagram for 22hp ~ 28hp

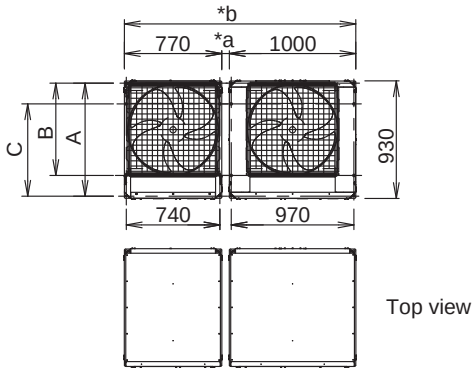

Top view

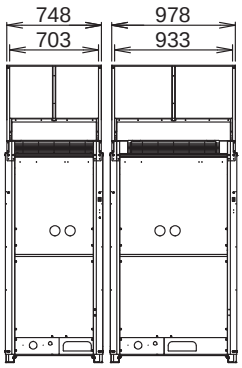

Front view

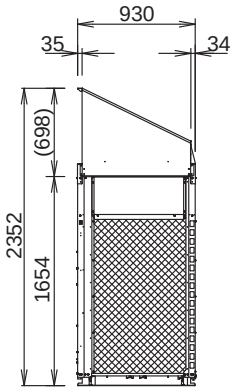

Right side view

unit: mm

Air direction: Front direction

	For 22hp ~ 28hp	
	*a	*b
A : 894 (Installation hole pitch) * The tubing is routed out from the front.	60	1830
B : 730 (Installation hole pitch) * The tubing is routed out from the bottom.	180	1950
C : 730 (Installation hole pitch)	180	1950

Diagram for 30hp & 32hp

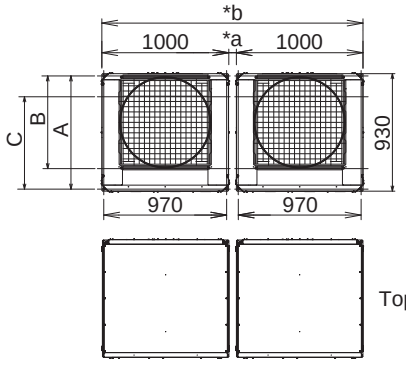

Top view

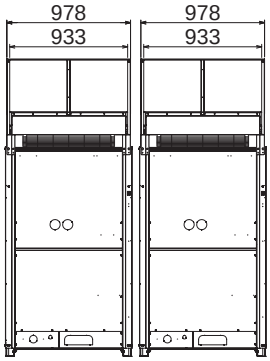

Front view

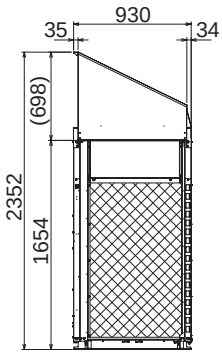

Right side view

unit: mm

Air direction: Front direction

	For 30hp ~ 32hp	
	*a	*b
A : 894 (Installation hole pitch) * The tubing is routed out from the front.	60	2060
B : 730 (Installation hole pitch) * The tubing is routed out from the bottom.	180	2180
C : 730 (Installation hole pitch)	180	2180

4. Installation Instructions

Reference diagram for air-discharge chamber (field supply) (continued)

Unit combinations for Standard-COP mode

Can be installed so that the air direction is to the front, right, left or rear direction.
According to the installation site, you may choose the setting position in the depth direction of the anchor bolt from “A”, “B” or “C”.
Regarding the field supply parts for the detail diagrams, refer to the section “9. Supplement”.

Diagram for 34hp & 36hp

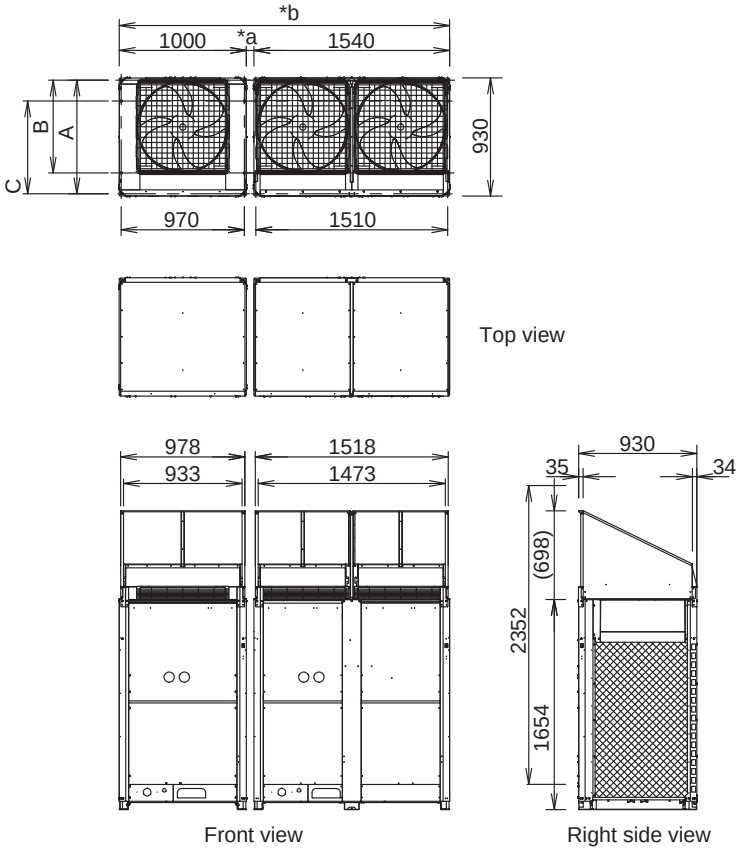

unit: mm

Air direction: Front direction

	For 34hp & 36hp	
	*a	*b
A : 894 (Installation hole pitch) * The tubing is routed out from the front.	60	2600
B : 730 (Installation hole pitch) * The tubing is routed out from the bottom.	180	2720
C : 730 (Installation hole pitch)	180	2720

Diagram for 38hp & 40hp

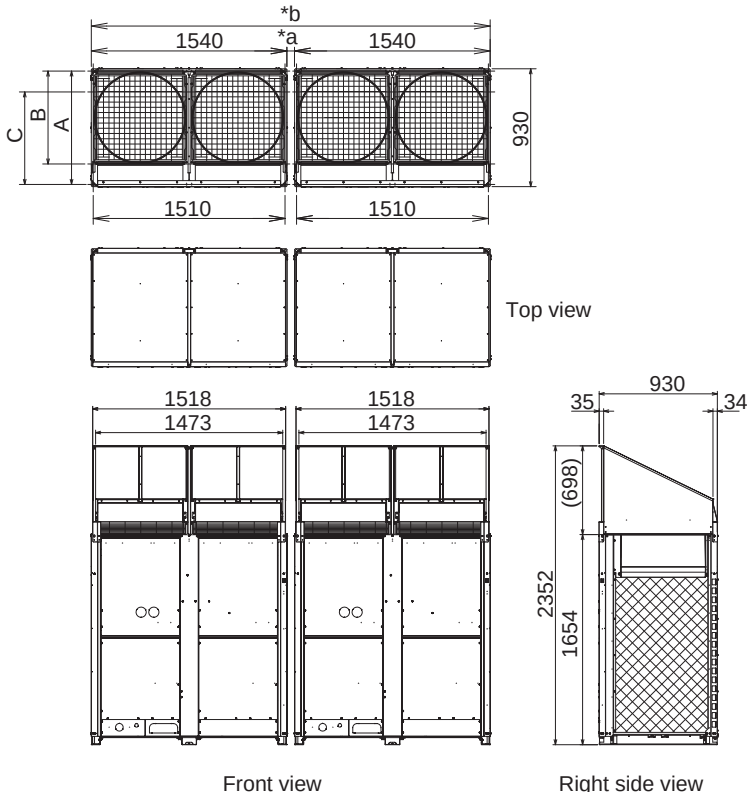

unit: mm

Air direction: Front direction

	For 38hp & 40hp	
	*a	*b
A : 894 (Installation hole pitch) * The tubing is routed out from the front.	60	3140
B : 730 (Installation hole pitch) * The tubing is routed out from the bottom.	180	3260
C : 730 (Installation hole pitch)	180	3260

4. Installation Instructions

Reference diagram for air-discharge chamber (field supply) (continued)

Unit combinations for Standard-COP mode

Can be installed so that the air direction is to the front, right, left or rear direction.
According to the installation site, you may choose the setting position in the depth direction of the anchor bolt from “A”, “B” or “C”.
Regarding the field supply parts for the detail diagrams, refer to the section “9. Supplement”.

Diagram for 42hp & 44hp

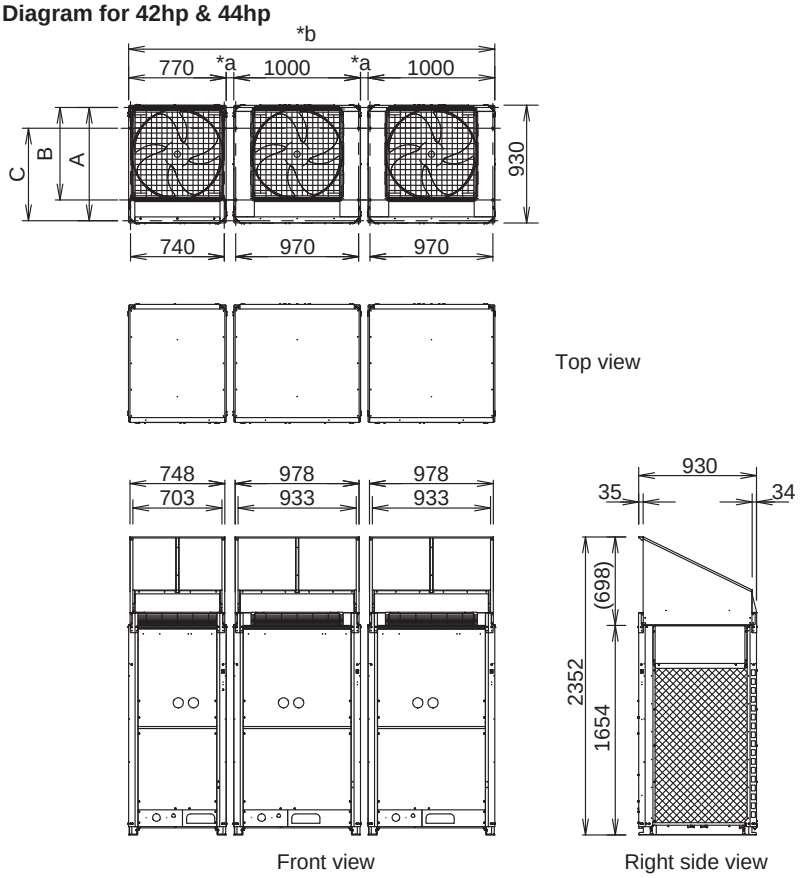

unit: mm

Air direction: Front direction

	For 42hp & 44hp	
	*a	*b
A : 894 (Installation hole pitch) * The tubing is routed out from the front.	60	2890
B : 730 (Installation hole pitch) * The tubing is routed out from the bottom.	180	3130
C : 730 (Installation hole pitch)	180	3130

Diagram for 46hp & 48hp

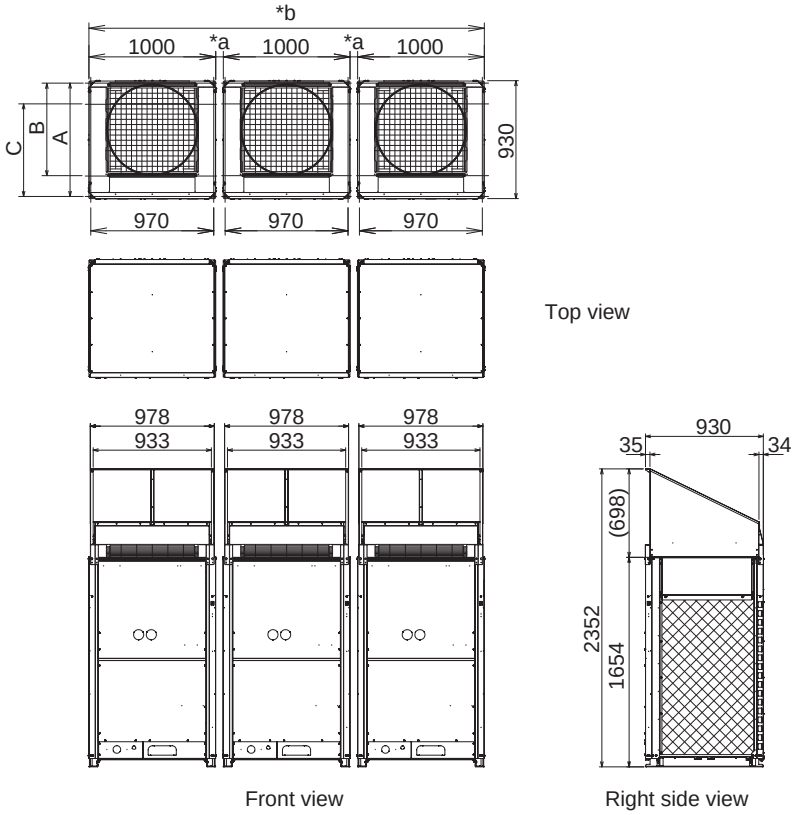

unit: mm

Air direction: Front direction

	For 46hp & 48hp	
	*a	*b
A : 894 (Installation hole pitch) * The tubing is routed out from the front.	60	3120
B : 730 (Installation hole pitch) * The tubing is routed out from the bottom.	180	3360
C : 730 (Installation hole pitch)	180	3360

4. Installation Instructions

Reference diagram for air-discharge chamber (field supply) (continued)

Unit combinations for Standard-COP mode

Can be installed so that the air direction is to the front, right, left or rear direction.
According to the installation site, you may choose the setting position in the depth direction of the anchor bolt from “A”, “B” or “C”.
Regarding the field supply parts for the detail diagrams, refer to the section “9. Supplement”.

Diagram for 50hp & 52hp

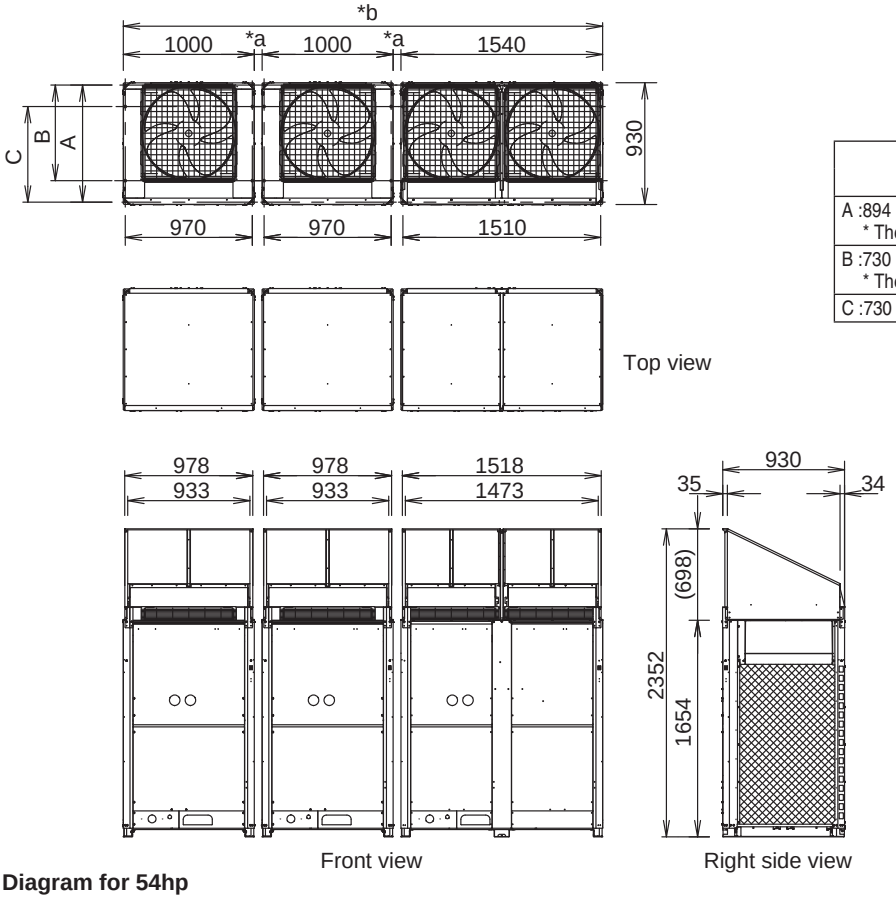

unit: mm

Air direction: Front direction

	For 50hp & 52hp	
	*a	*b
A :894 (Installation hole pitch) * The tubing is routed out from the front.	60	3660
B :730 (Installation hole pitch) * The tubing is routed out from the bottom.	180	3900
C :730 (Installation hole pitch)	180	3900

Diagram for 54hp

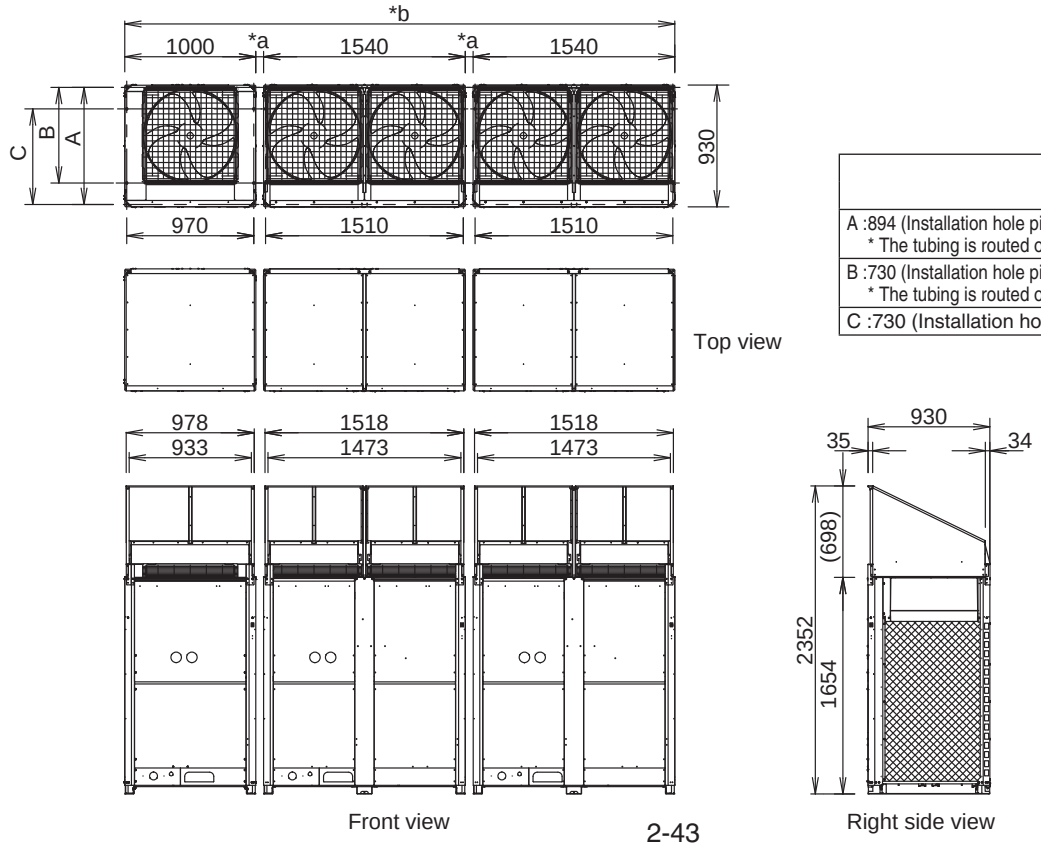

unit: mm

Air direction: Front direction

	For 54hp	
	*a	*b
A :894 (Installation hole pitch) * The tubing is routed out from the front.	60	4200
B :730 (Installation hole pitch) * The tubing is routed out from the bottom.	180	4440
C :730 (Installation hole pitch)	180	4440

4. Installation Instructions

Reference diagram for air-discharge chamber (field supply) (continued)

Unit combinations for Standard-COP mode

Can be installed so that the air direction is to the front, right, left or rear direction.
According to the installation site, you may choose the setting position in the depth direction of the anchor bolt from “A”, “B” or “C”.
Regarding the field supply parts for the detail diagrams, refer to the section “9. Supplement”.

Diagram for 56hp ~ 60hp

unit: mm

Air direction: Front direction

	For 56hp ~ 60hp	
	*a	*b
A :894 (Installation hole pitch) * The tubing is routed out from the front.	60	4740
B :730 (Installation hole pitch) * The tubing is routed out from the bottom.	180	4980
C :730 (Installation hole pitch)	180	4980

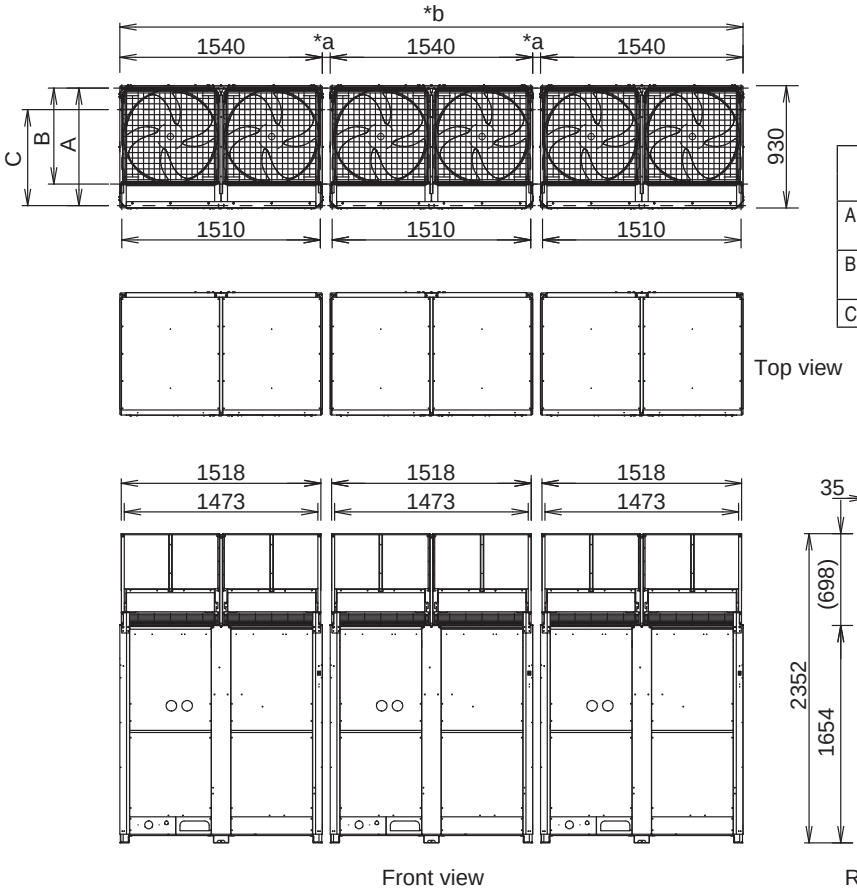

4. Installation Instructions

Reference diagram for air-discharge chamber (field supply) (continued)

Unit combinations for High-COP mode

Can be installed so that the air direction is to the front, right, left or rear direction.
According to the installation site, you may choose the setting position in the depth direction of the anchor bolt from “A”, “B” or “C”.
Regarding the field supply parts for the detail diagrams, refer to the section “9. Supplement”.

Diagram for 18hp & 20hp

unit: mm

Air direction: Front direction

	For 18hp ~ 20hp	
	*a	*b
A : 894 (Installation hole pitch) * The tubing is routed out from the front.	60	1830
B : 730 (Installation hole pitch) * The tubing is routed out from the bottom.	180	1950
C : 730 (Installation hole pitch)	180	1950

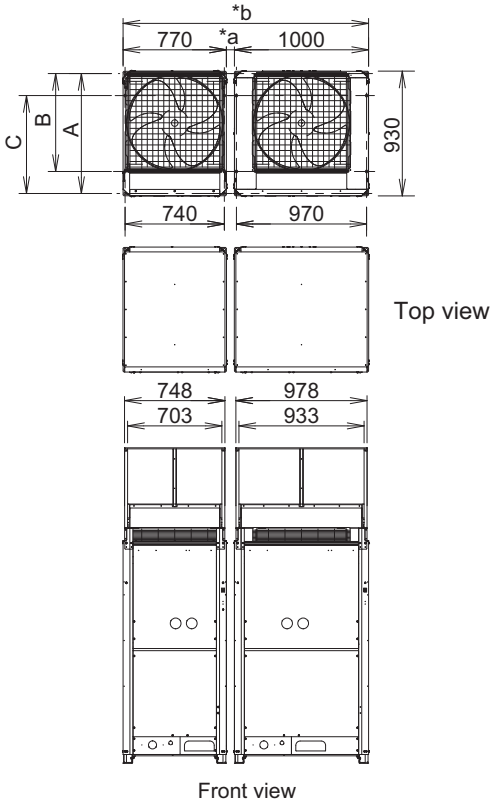

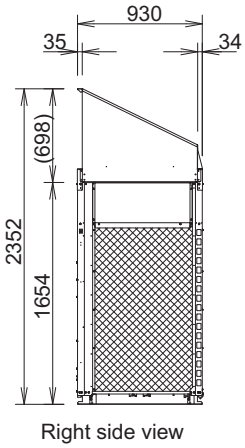

Diagram for 22hp

unit: mm

Air direction: Front direction

	For 22hp	
	*a	*b
A : 894 (Installation hole pitch) * The tubing is routed out from the front.	60	2370
B : 730 (Installation hole pitch) * The tubing is routed out from the bottom.	180	2490
C : 730 (Installation hole pitch)	180	2490

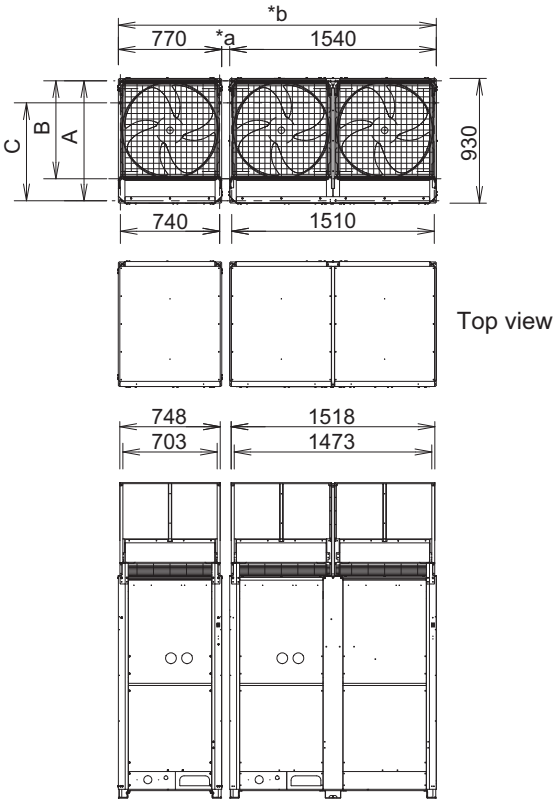

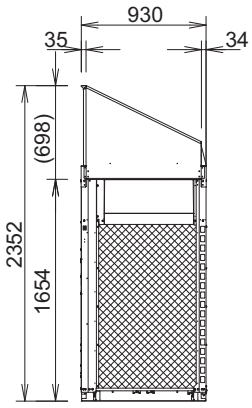

4. Installation Instructions

Reference diagram for air-discharge chamber (field supply) (continued)

Unit combinations for High-COP mode

Can be installed so that the air direction is to the front, right, left or rear direction.
According to the installation site, you may choose the setting position in the depth direction of the anchor bolt from “A”, “B” or “C”.
Regarding the field supply parts for the detail diagrams, refer to the section “9. Supplement”.

Diagram for 24hp

unit: mm

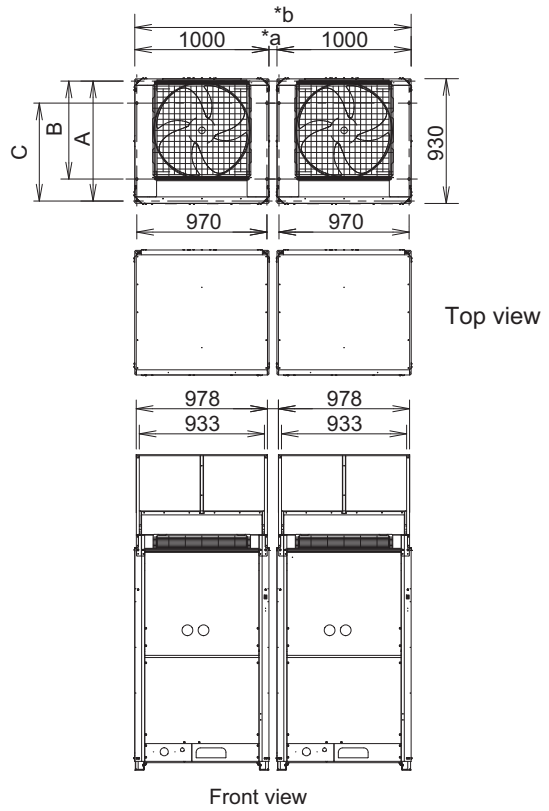

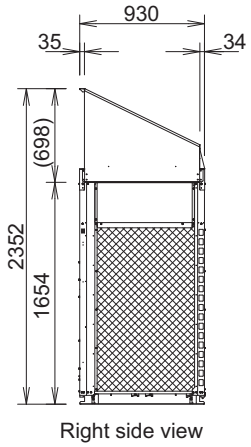

Air direction: Front direction

	For 24hp	
	*a	*b
A : 894 (Installation hole pitch) * The tubing is routed out from the front.	60	2060
B : 730 (Installation hole pitch) * The tubing is routed out from the bottom.	180	2180
C : 730 (Installation hole pitch)	180	2180

Diagram for 26hp & 28hp

unit: mm

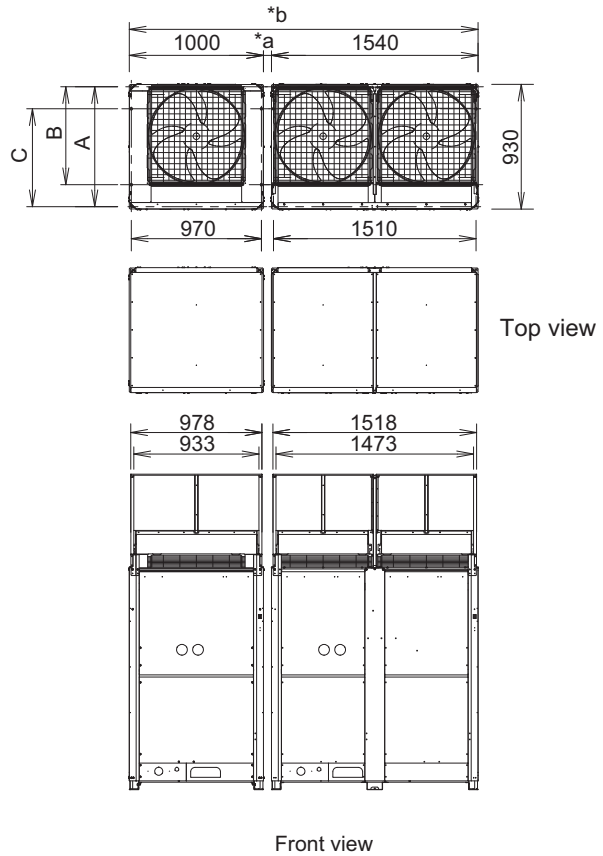

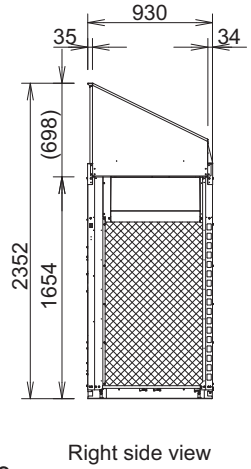

Air direction: Front direction

	For 26hp & 28hp	
	*a	*b
A : 894 (Installation hole pitch) * The tubing is routed out from the front.	60	2600
B : 730 (Installation hole pitch) * The tubing is routed out from the bottom.	180	2720
C : 730 (Installation hole pitch)	180	2720

4. Installation Instructions

Reference diagram for air-discharge chamber (field supply) (continued)

Unit combinations for High-COP mode

Can be installed so that the air direction is to the front, right, left or rear direction.
According to the installation site, you may choose the setting position in the depth direction of the anchor bolt from “A”, “B” or “C”.
Regarding the field supply parts for the detail diagrams, refer to the section “9. Supplement”.

Diagram for 30hp & 32hp

unit: mm

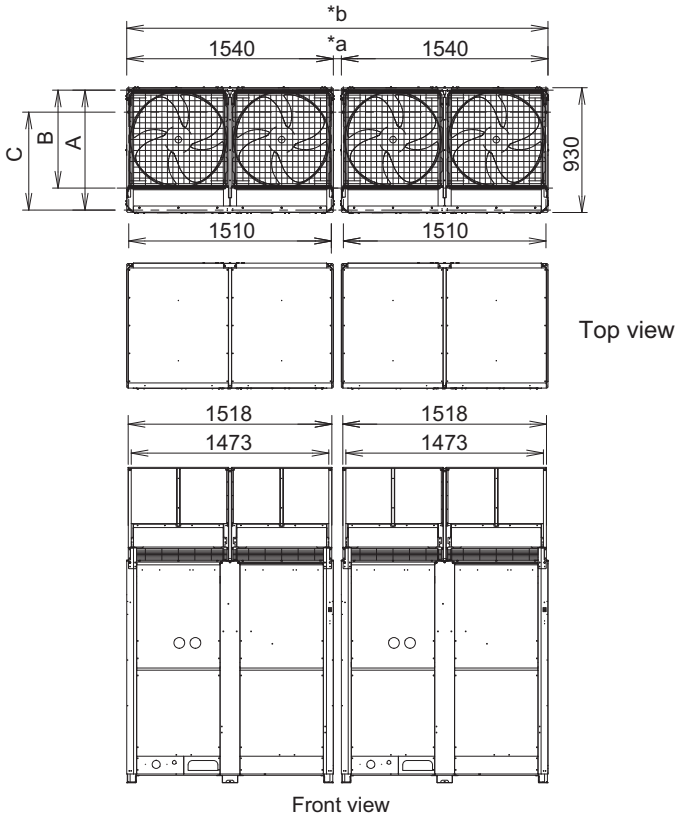

Air direction: Front direction

	For 30hp & 32hp	
	*a	*b
A : 894 (Installation hole pitch) * The tubing is routed out from the front.	60	3140
B : 730 (Installation hole pitch) * The tubing is routed out from the bottom.	180	3260
C : 730 (Installation hole pitch)	180	3260

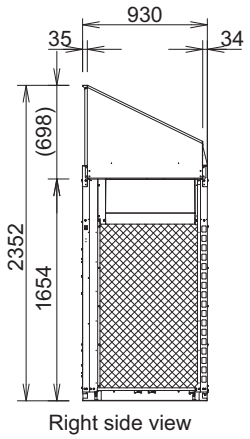

Diagram for 34hp

unit: mm

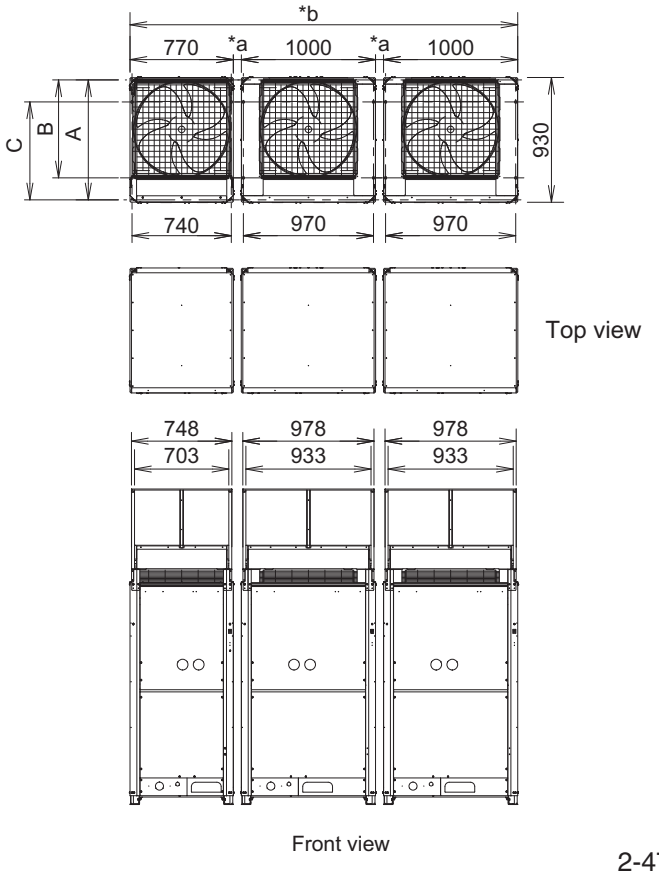

Air direction: Front direction

	For 34hp	
	*a	*b
A : 894 (Installation hole pitch) * The tubing is routed out from the front.	60	2890
B : 730 (Installation hole pitch) * The tubing is routed out from the bottom.	180	3130
C : 730 (Installation hole pitch)	180	3130

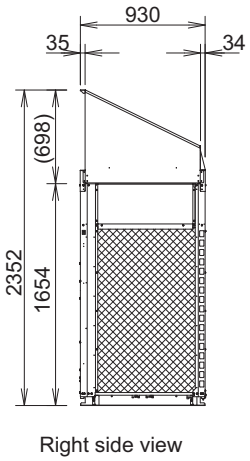

4. Installation Instructions

Reference diagram for air-discharge chamber (field supply) (continued)

Unit combinations for High-COP mode

Can be installed so that the air direction is to the front, right, left or rear direction.
According to the installation site, you may choose the setting position in the depth direction of the anchor bolt from “A”, “B” or “C”.
Regarding the field supply parts for the detail diagrams, refer to the section “9. Supplement”.

Diagram for 36hp

unit: mm

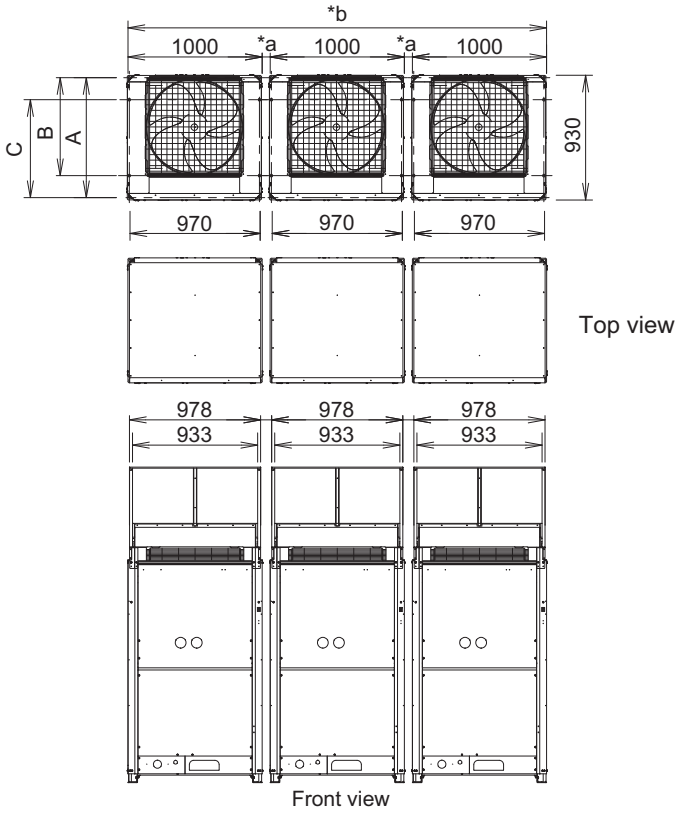

Air direction: Front direction

	For 36hp	
	*a	*b
A : 894 (Installation hole pitch) * The tubing is routed out from the front.	60	3120
B : 730 (Installation hole pitch) * The tubing is routed out from the bottom.	180	3360
C : 730 (Installation hole pitch)	180	3360

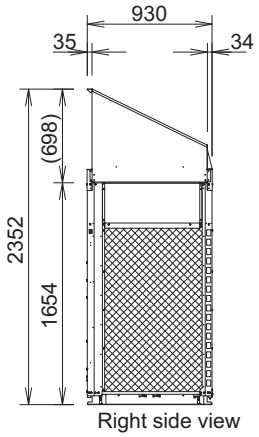

Diagram for 38hp & 40hp

unit: mm

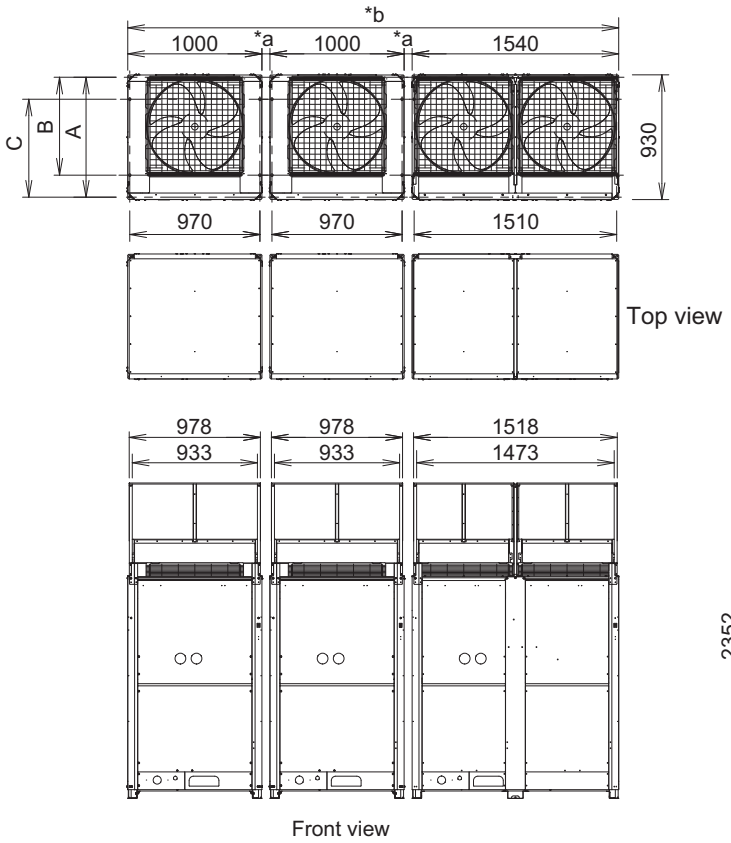

Air direction: Front direction

	For 38hp & 40hp	
	*a	*b
A : 894 (Installation hole pitch) * The tubing is routed out from the front.	60	3360
B : 730 (Installation hole pitch) * The tubing is routed out from the bottom.	180	3900
C : 730 (Installation hole pitch)	180	3900

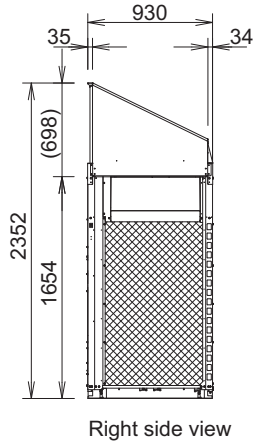

4. Installation Instructions

Reference diagram for air-discharge chamber (field supply) (continued)

Unit combinations for High-COP mode

Can be installed so that the air direction is to the front, right, left or rear direction.
According to the installation site, you may choose the setting position in the depth direction of the anchor bolt from “A”, “B” or “C”.
Regarding the field supply parts for the detail diagrams, refer to the section “9. Supplement”.

Diagram for 42hp

unit: mm

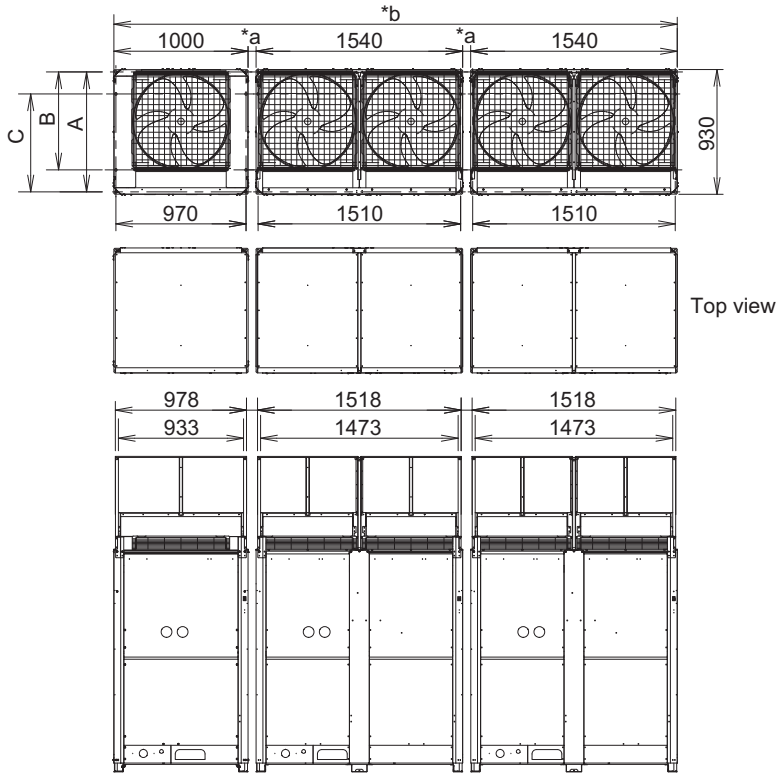

Air direction: Front direction

	For 42hp	
	*a	*b
A : 894 (Installation hole pitch) * The tubing is routed out from the front.	60	4200
B : 730 (Installation hole pitch) * The tubing is routed out from the bottom.	180	4440
C : 730 (Installation hole pitch)	180	4440

Diagram for 44hp ~ 48hp

unit: mm

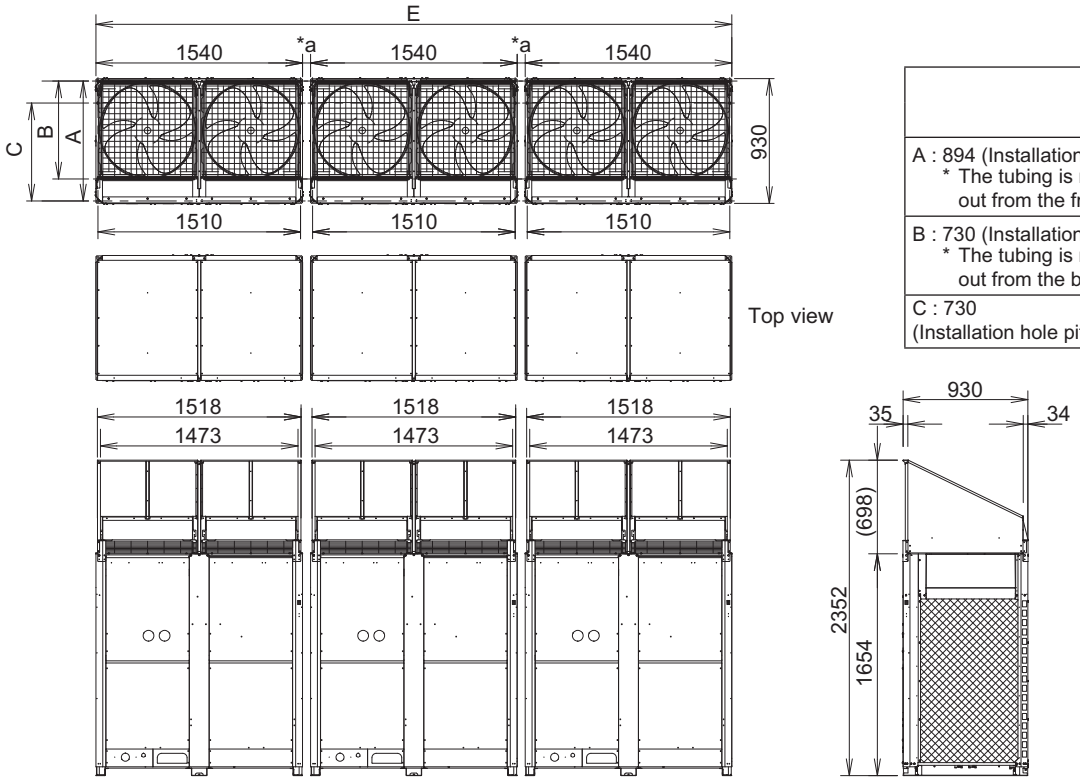

Air direction: Front direction

	For 44hp ~ 48hp	
	*a	*b
A : 894 (Installation hole pitch) * The tubing is routed out from the front.	60	4740
B : 730 (Installation hole pitch) * The tubing is routed out from the bottom.	180	4980
C : 730 (Installation hole pitch)	180	4980

4. Installation Instructions

4-6. Dimensions of Snow Ducting

Reference diagram for snow-proof vents (field supply)

Can be installed so that the air direction is to the front, right, left or rear direction.
According to the installation site, you may choose the setting position in the depth direction of the anchor bolt from “A”, “B” or “C”.
Regarding the field supply parts for the detail diagrams, refer to the section “9. Supplement”.

Model : U-8ME1E81, 10ME1E81, 12ME1E81

unit: mm

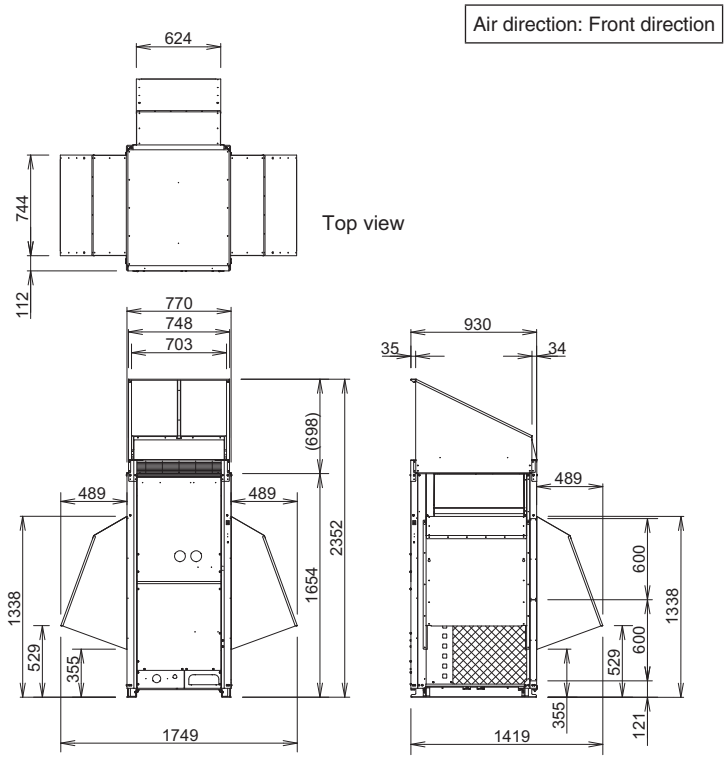

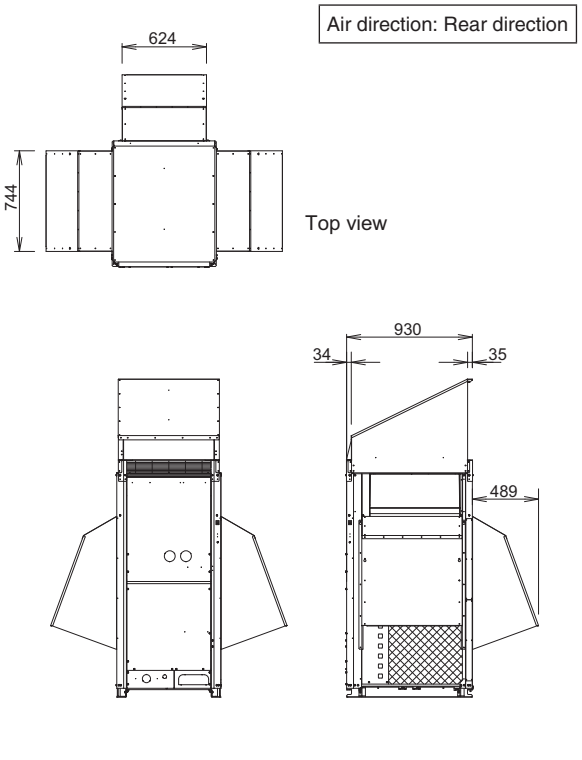

Model : U-14ME1E81, 16ME1E81

unit: mm

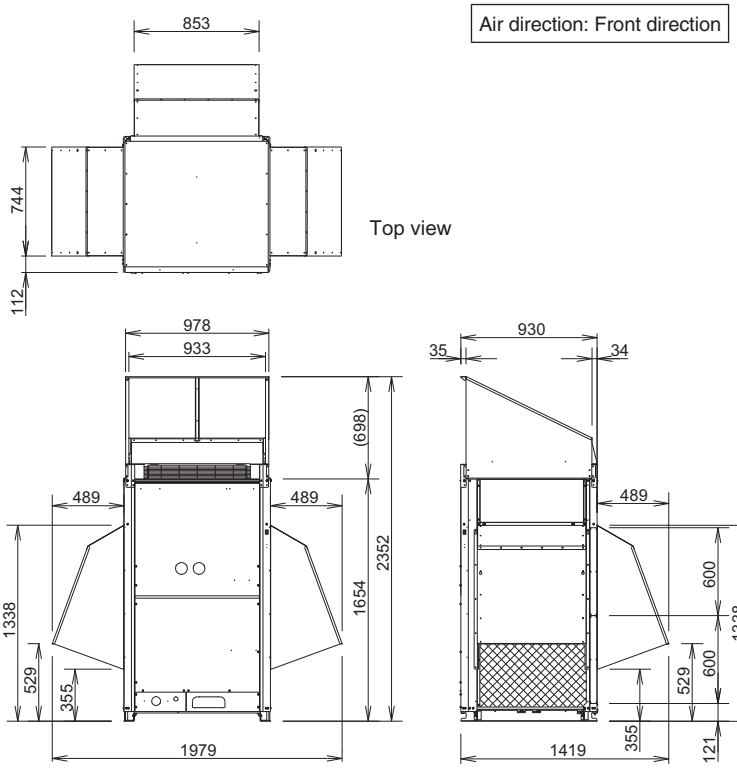

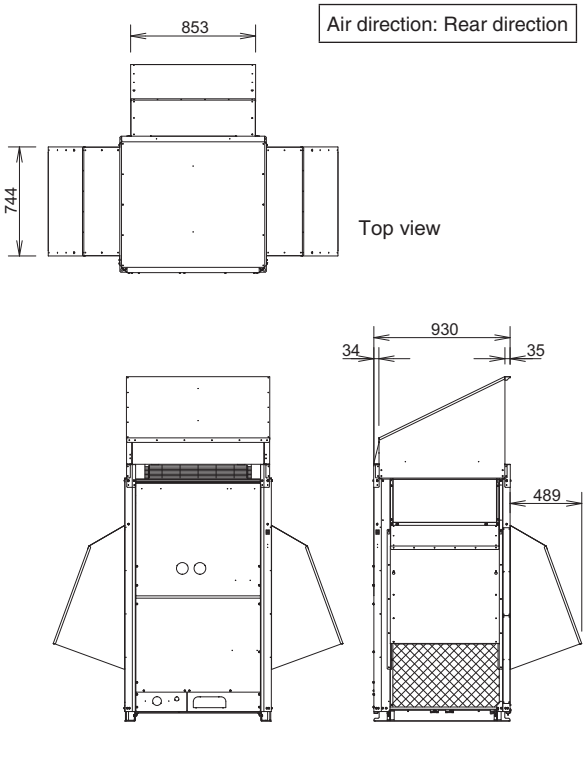

4. Installation Instructions

Reference diagram for snow-proof vents (field supply)

Can be installed so that the air direction is to the front, right, left or rear direction.
According to the installation site, you may choose the setting position in the depth direction of the anchor bolt from “A”, “B” or “C”.
Regarding the field supply parts for the detail diagrams, refer to the section “9. Supplement”.

Model : U-18ME1E81, 20ME1E81

unit: mm

Air direction: Front direction

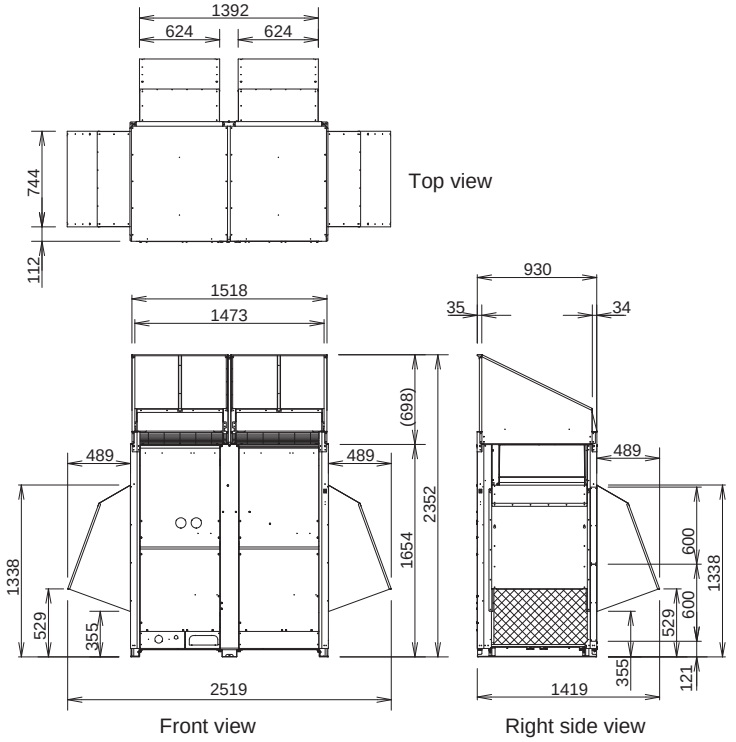

Air direction: Rear direction

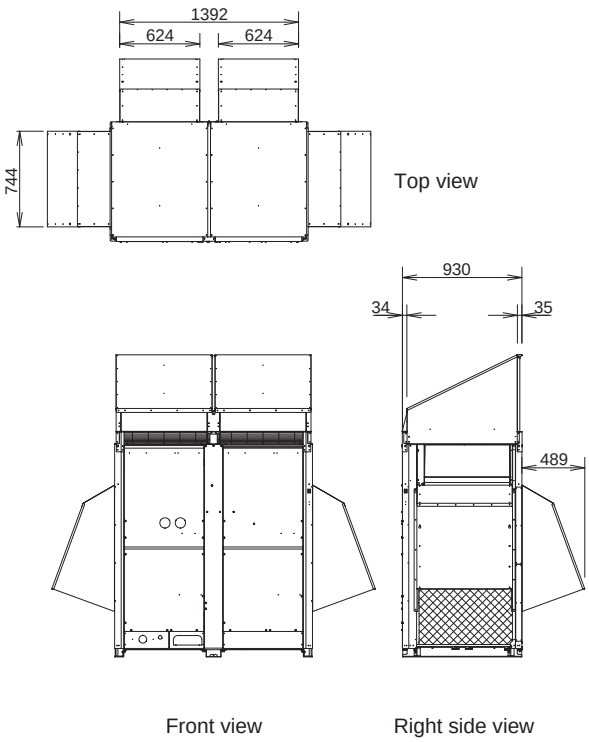

2

4. Installation Instructions

Reference diagram for snow-proof vents (field supply) (continued)

Unit combinations for Standard-COP mode

Can be installed so that the air direction is to the front, right, left or rear direction.
According to the installation site, you may choose the setting position in the depth direction of the anchor bolt from “A”, “B” or “C”.
Regarding the field supply parts for the detail diagrams, refer to the section “9. Supplement”.

Diagram for 22hp ~ 28hp

unit: mm

Air direction: Front direction

A: 894 (Installation hole pitch) * The tubing is routed out from the front.
B: 730 (Installation hole pitch) * The tubing is routed out from the bottom.
C: 730 (Installation hole pitch)

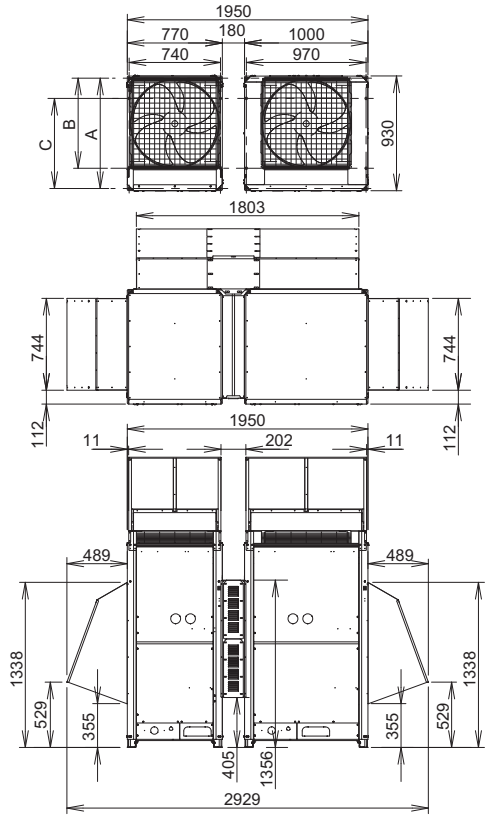

Front view

Top view

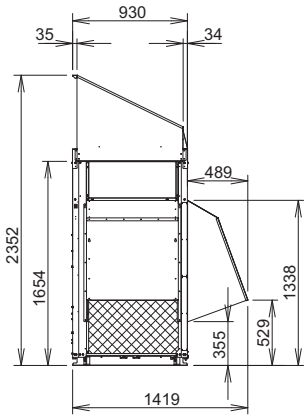

Right side view

Diagram for 30hp & 32hp

unit: mm

Air direction: Front direction

A: 894 (Installation hole pitch) * The tubing is routed out from the front.
B: 730 (Installation hole pitch) * The tubing is routed out from the bottom.
C: 730 (Installation hole pitch)

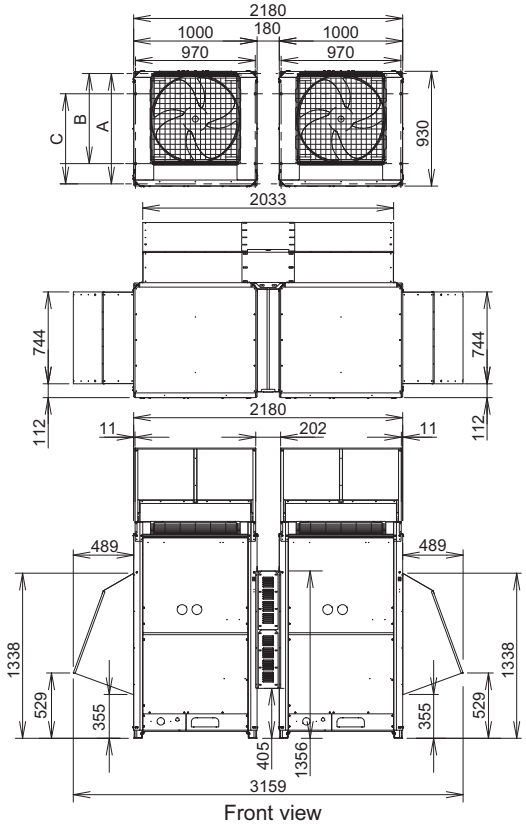

Front view

Top view

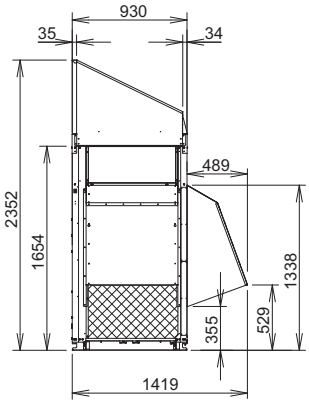

Right side view

4. Installation Instructions

Reference diagram for snow-proof vents (field supply) (continued)

Unit combinations for Standard-COP mode

Can be installed so that the air direction is to the front, right, left or rear direction.
According to the installation site, you may choose the setting position in the depth direction of the anchor bolt from “A”, “B” or “C”.
Regarding the field supply parts for the detail diagrams, refer to the section “9. Supplement”.

Diagram for 34hp & 36hp

unit: mm

Air direction: Front direction

A: 894 (Installation hole pitch) * The tubing is routed out from the front.
B: 730 (Installation hole pitch) * The tubing is routed out from the bottom.
C: 730 (Installation hole pitch)

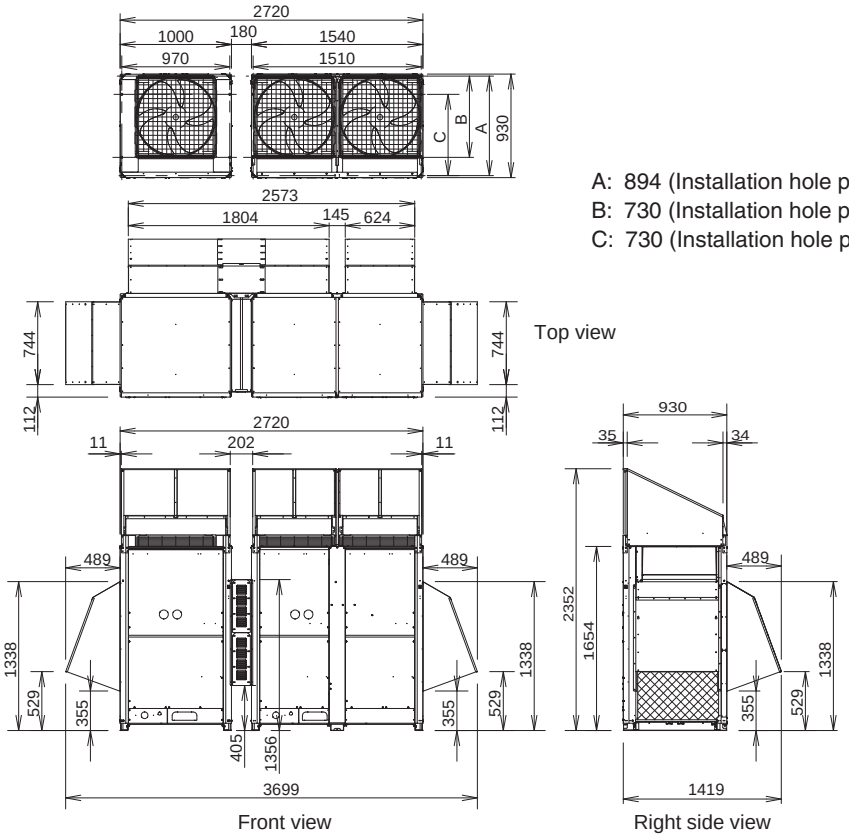

Diagram for 38hp & 40hp

unit: mm

Air direction: Front direction

A: 894 (Installation hole pitch) * The tubing is routed out from the front.
B: 730 (Installation hole pitch) * The tubing is routed out from the bottom.
C: 730 (Installation hole pitch)

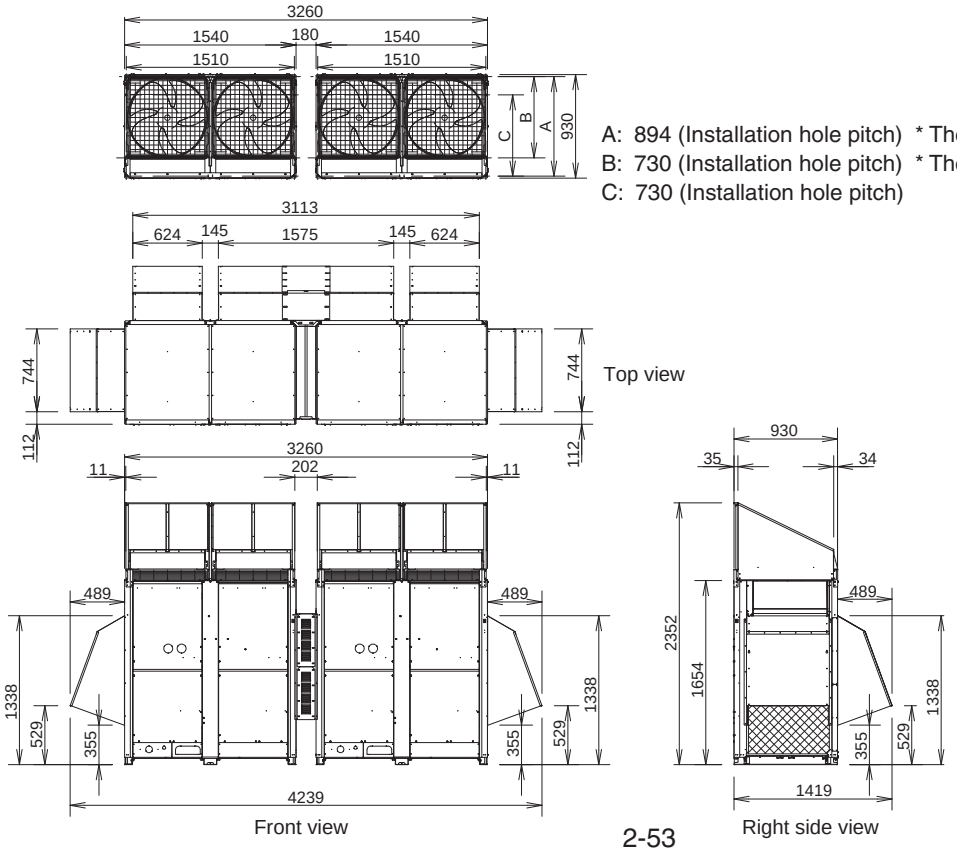

4. Installation Instructions

Reference diagram for snow-proof vents (field supply) (continued)

Unit combinations for Standard-COP mode

Can be installed so that the air direction is to the front, right, left or rear direction.
According to the installation site, you may choose the setting position in the depth direction of the anchor bolt from “A”, “B” or “C”.
Regarding the field supply parts for the detail diagrams, refer to the section “9. Supplement”.

Diagram for 42hp & 44hp

unit: mm

Air direction: Front direction

A: 894 (Installation hole pitch) * The tubing is routed out from the front.
B: 730 (Installation hole pitch) * The tubing is routed out from the bottom.
C: 730 (Installation hole pitch)

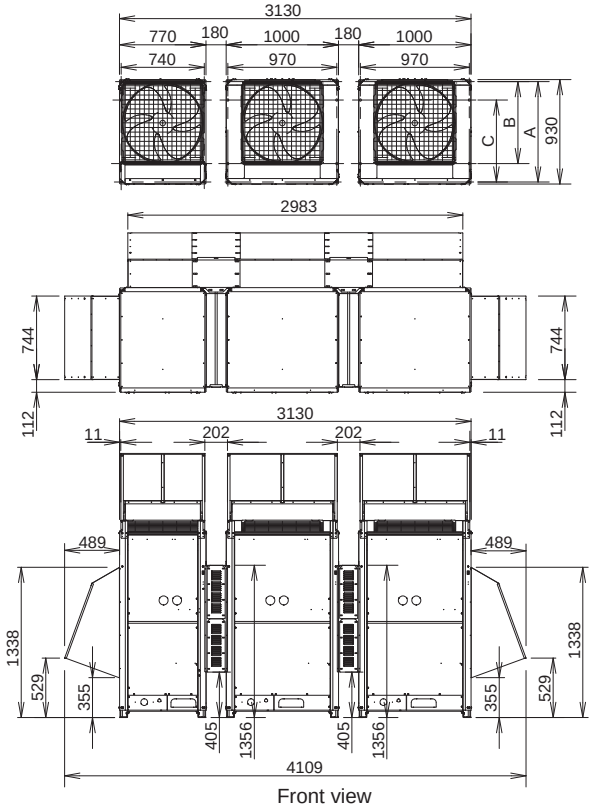

Top view

Front view

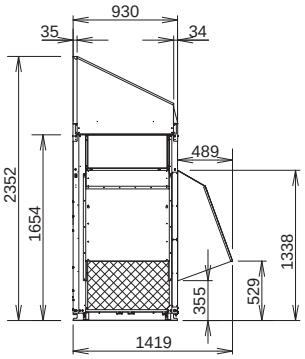

Right side view

Diagram for 46hp & 48hp

unit: mm

Air direction: Front direction

A: 894 (Installation hole pitch) * The tubing is routed out from the front.
B: 730 (Installation hole pitch) * The tubing is routed out from the bottom.
C: 730 (Installation hole pitch)

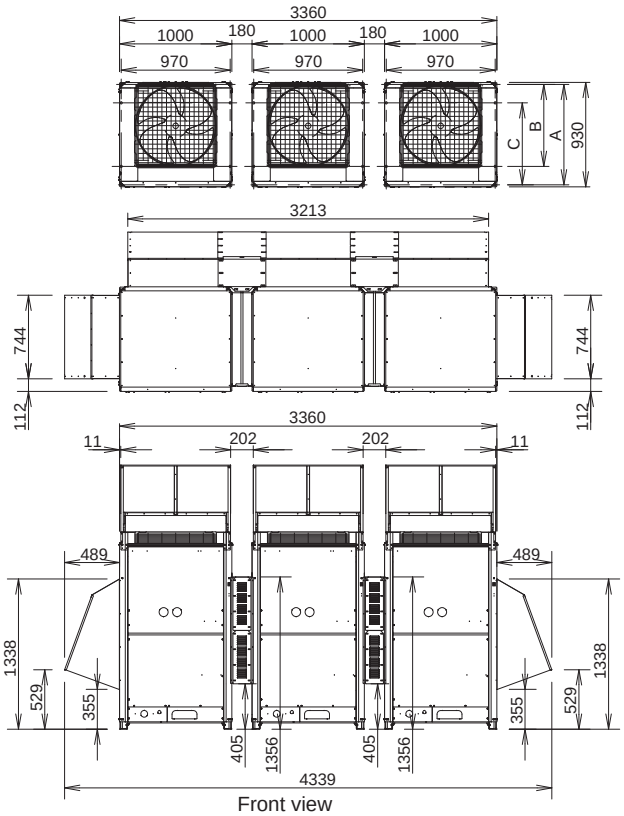

Top view

Front view

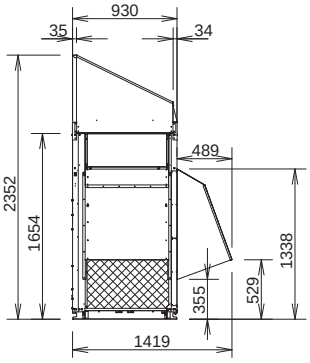

Right side view

4. Installation Instructions

Reference diagram for snow-proof vents (field supply) (continued)

Unit combinations for Standard-COP mode

Can be installed so that the air direction is to the front, right, left or rear direction.
According to the installation site, you may choose the setting position in the depth direction of the anchor bolt from “A”, “B” or “C”.
Regarding the field supply parts for the detail diagrams, refer to the section “9. Supplement”.

Diagram for 50hp & 52hp

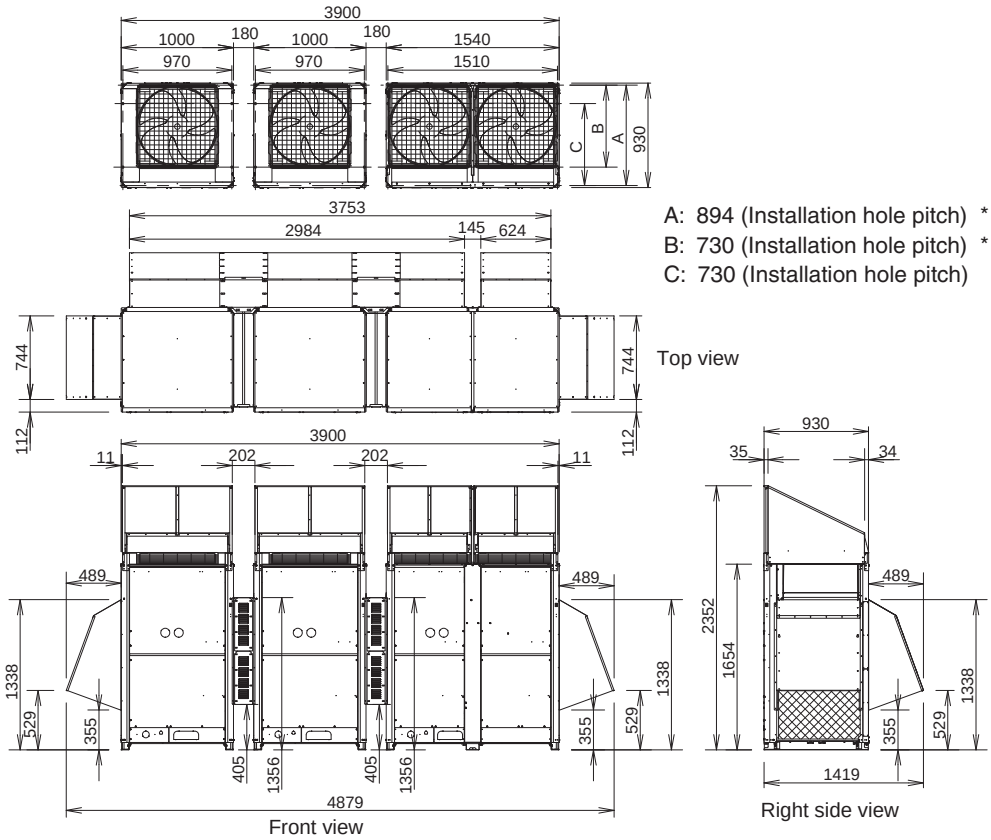

unit: mm

Air direction: Front direction

A: 894 (Installation hole pitch) * The tubing is routed out from the front.
B: 730 (Installation hole pitch) * The tubing is routed out from the bottom.
C: 730 (Installation hole pitch)

Diagram for 54hp

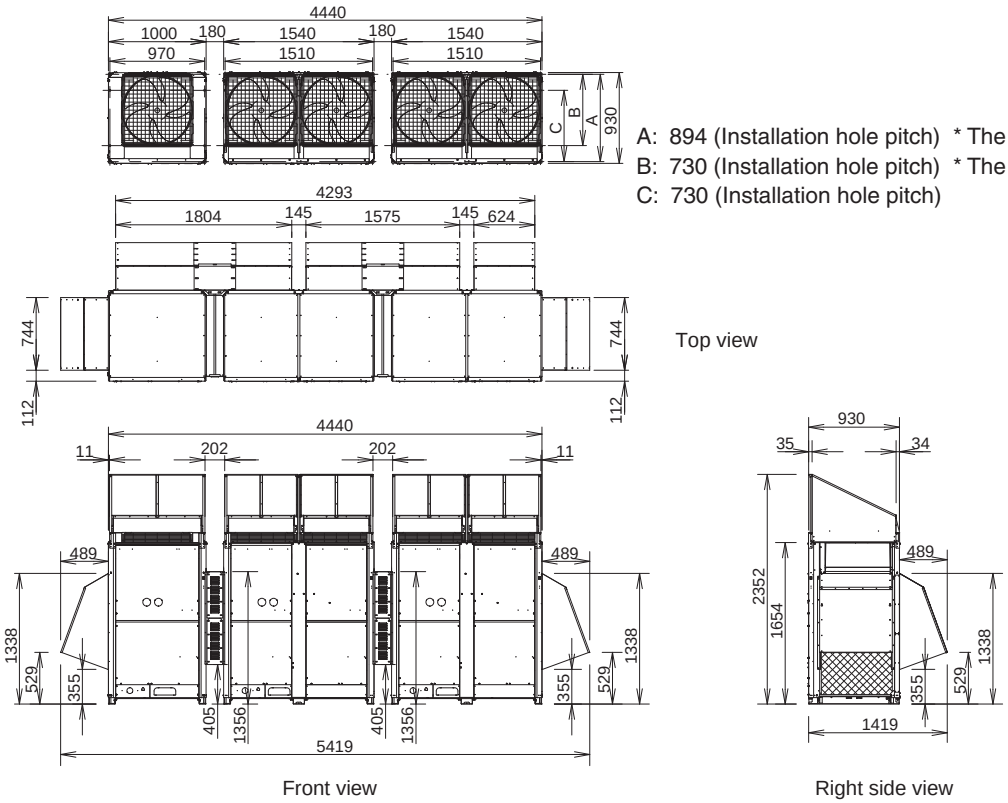

unit: mm

Air direction: Front direction

A: 894 (Installation hole pitch) * The tubing is routed out from the front.
B: 730 (Installation hole pitch) * The tubing is routed out from the bottom.
C: 730 (Installation hole pitch)

4. Installation Instructions

Reference diagram for snow-proof vents (field supply) (continued)

Unit combinations for Standard-COP mode

Can be installed so that the air direction is to the front, right, left or rear direction.
According to the installation site, you may choose the setting position in the depth direction of the anchor bolt from “A”, “B” or “C”.
Regarding the field supply parts for the detail diagrams, refer to the section “9. Supplement”.

Diagram for 56hp ~ 60hp

unit: mm

Air direction: Front direction

A: 894 (Installation hole pitch) * The tubing is routed out from the front.
B: 730 (Installation hole pitch) * The tubing is routed out from the bottom.
C: 730 (Installation hole pitch)

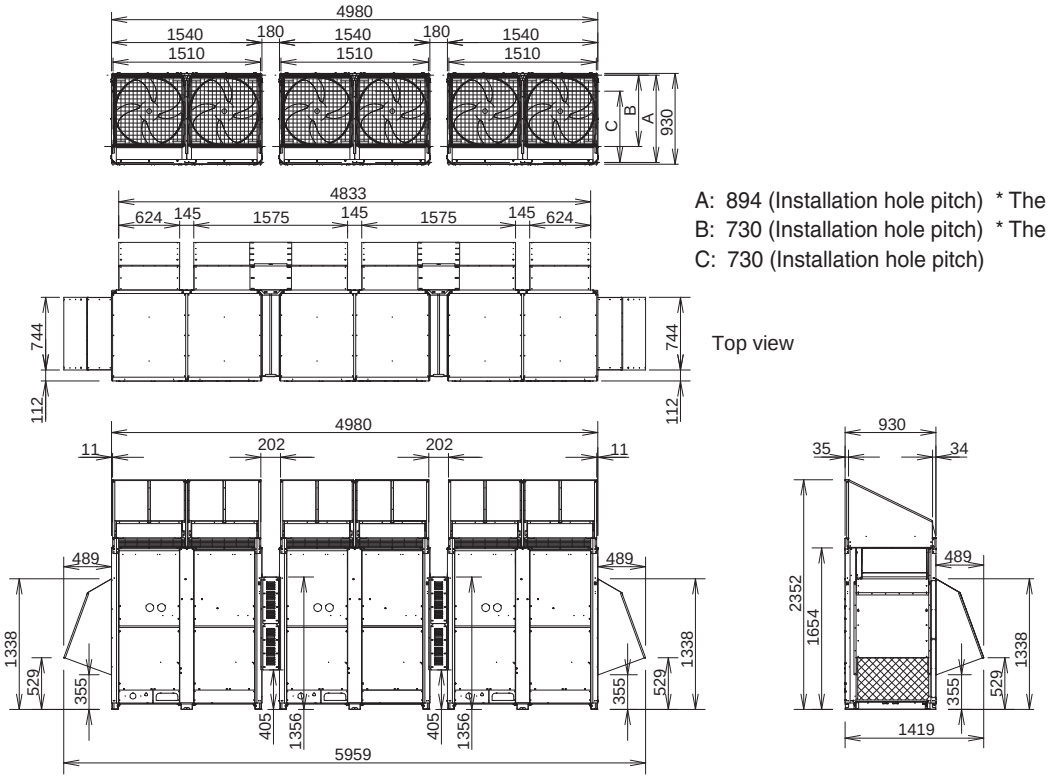

Front view

Right side view

4. Installation Instructions

Reference diagram for snow-proof vents (field supply) (continued)

Unit combinations for High-COP mode

Can be installed so that the air direction is to the front, right, left or rear direction.
According to the installation site, you may choose the setting position in the depth direction of the anchor bolt from “A”, “B” or “C”.
Regarding the field supply parts for the detail diagrams, refer to the section “9. Supplement”.

Diagram for 18hp & 20hp

unit: mm

Air direction: Front direction

A: 894 (Installation hole pitch) * The tubing is routed out from the front.
B: 730 (Installation hole pitch) * The tubing is routed out from the bottom.
C: 730 (Installation hole pitch)

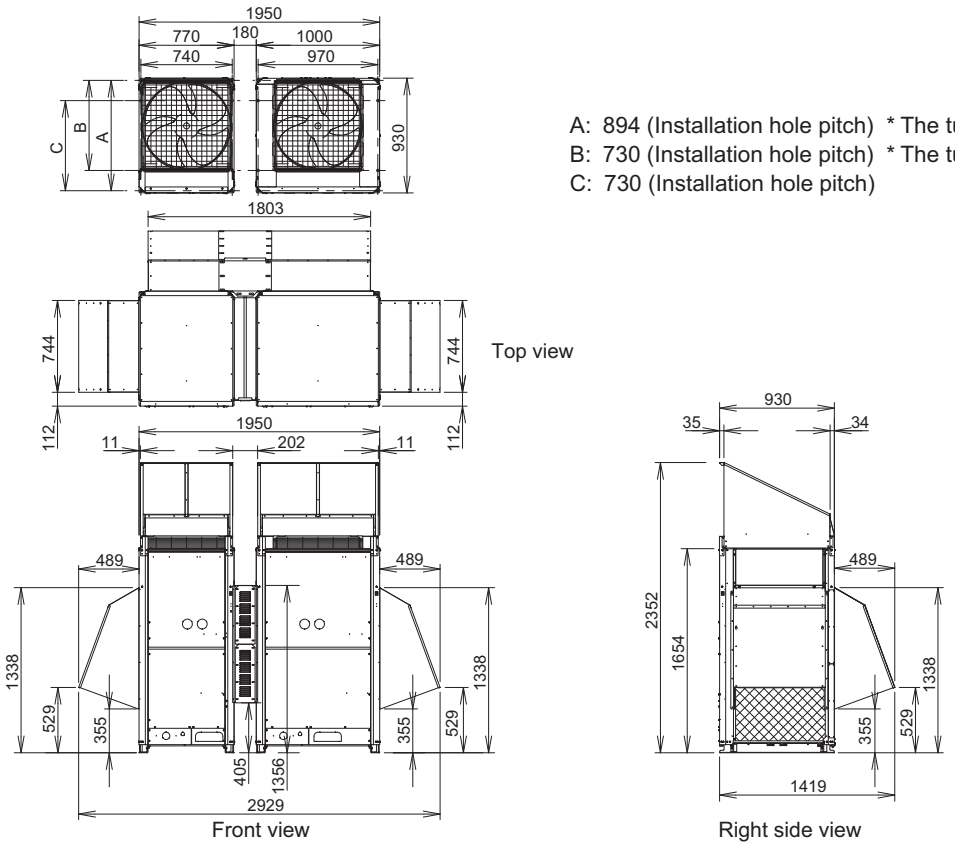

Diagram for 22hp

unit: mm

Air direction: Front direction

A: 894 (Installation hole pitch) * The tubing is routed out from the front.
B: 730 (Installation hole pitch) * The tubing is routed out from the bottom.
C: 730 (Installation hole pitch)

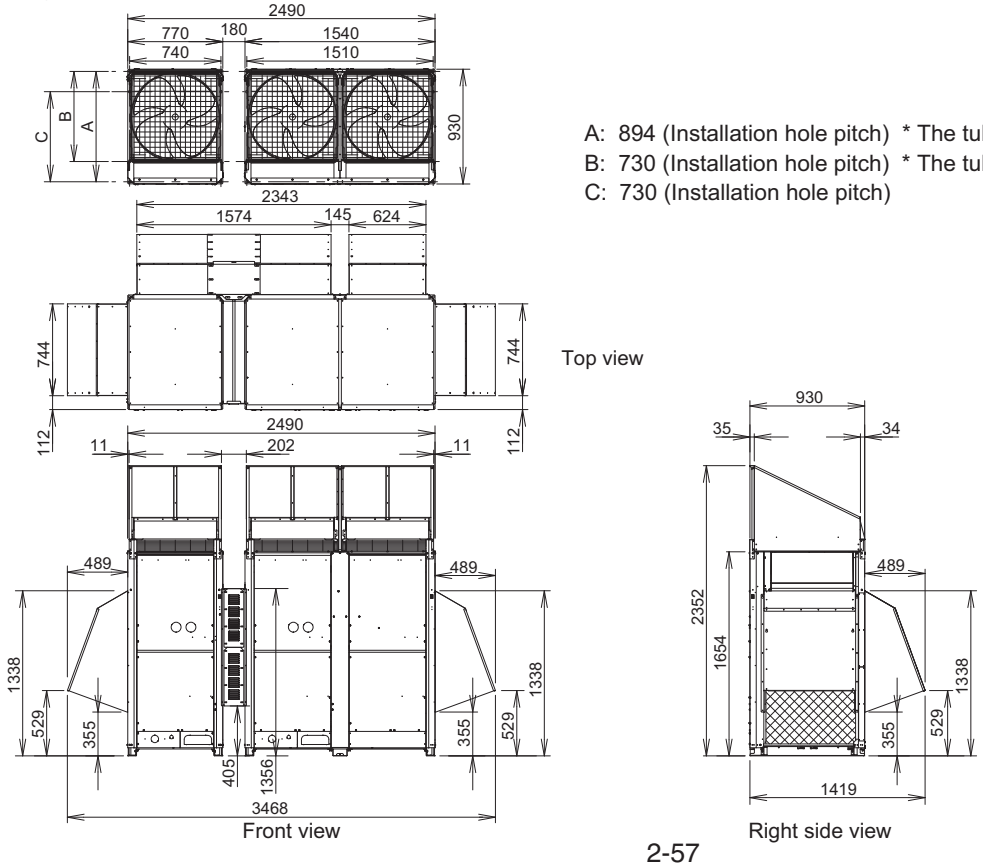

4. Installation Instructions

Reference diagram for snow-proof vents (field supply) (continued)

Unit combinations for High-COP mode

Can be installed so that the air direction is to the front, right, left or rear direction.
According to the installation site, you may choose the setting position in the depth direction of the anchor bolt from “A”, “B” or “C”.
Regarding the field supply parts for the detail diagrams, refer to the section “9. Supplement”.

Diagram for 24hp

unit: mm

Air direction: Front direction

A: 894 (Installation hole pitch) * The tubing is routed out from the front.
B: 730 (Installation hole pitch) * The tubing is routed out from the bottom.
C: 730 (Installation hole pitch)

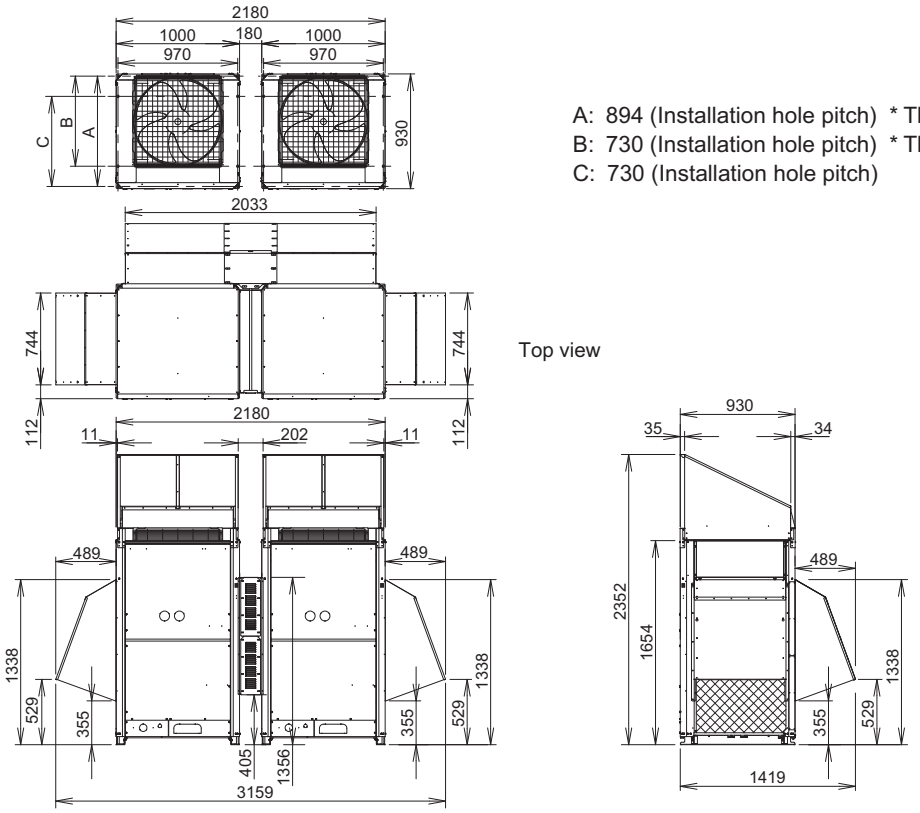

Front view

Right side view

Diagram for 26hp & 28hp

unit: mm

Air direction: Front direction

A: 894 (Installation hole pitch) * The tubing is routed out from the front.
B: 730 (Installation hole pitch) * The tubing is routed out from the bottom.
C: 730 (Installation hole pitch)

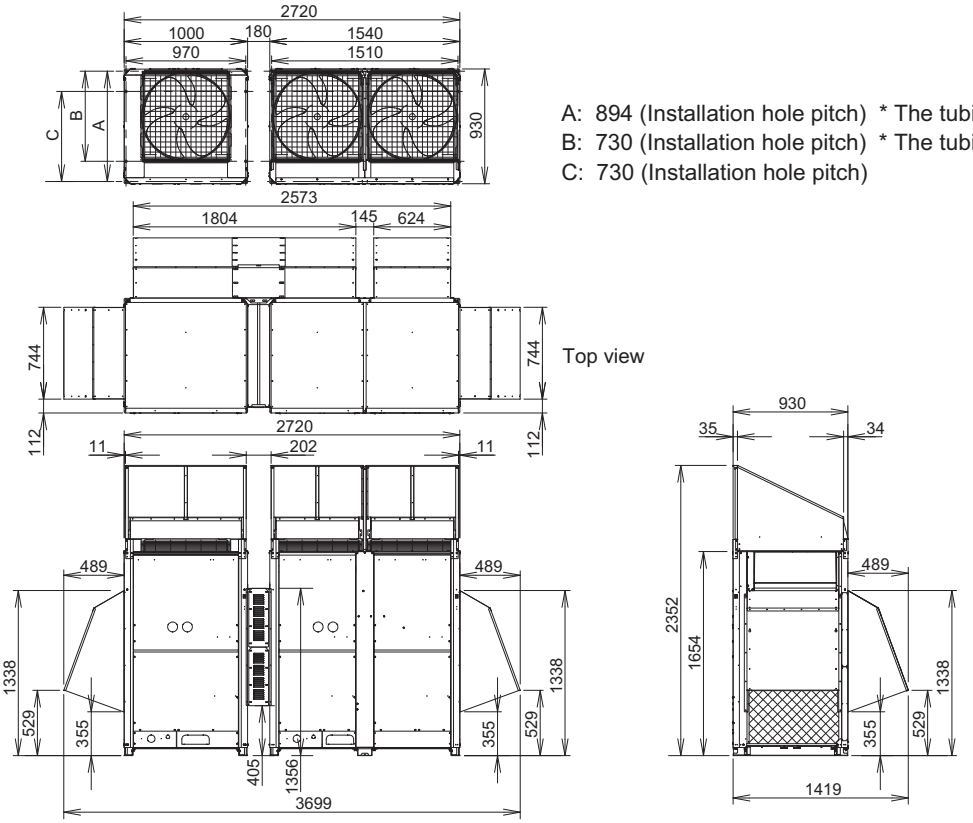

Front view

Right side view

4. Installation Instructions

Reference diagram for snow-proof vents (field supply) (continued)

Unit combinations for High-COP mode

Can be installed so that the air direction is to the front, right, left or rear direction.
According to the installation site, you may choose the setting position in the depth direction of the anchor bolt from “A”, “B” or “C”.
Regarding the field supply parts for the detail diagrams, refer to the section “9. Supplement”.

Diagram for 30hp & 32hp

unit: mm

Air direction: Front direction

A: 894 (Installation hole pitch) * The tubing is routed out from the front.
B: 730 (Installation hole pitch) * The tubing is routed out from the bottom.
C: 730 (Installation hole pitch)

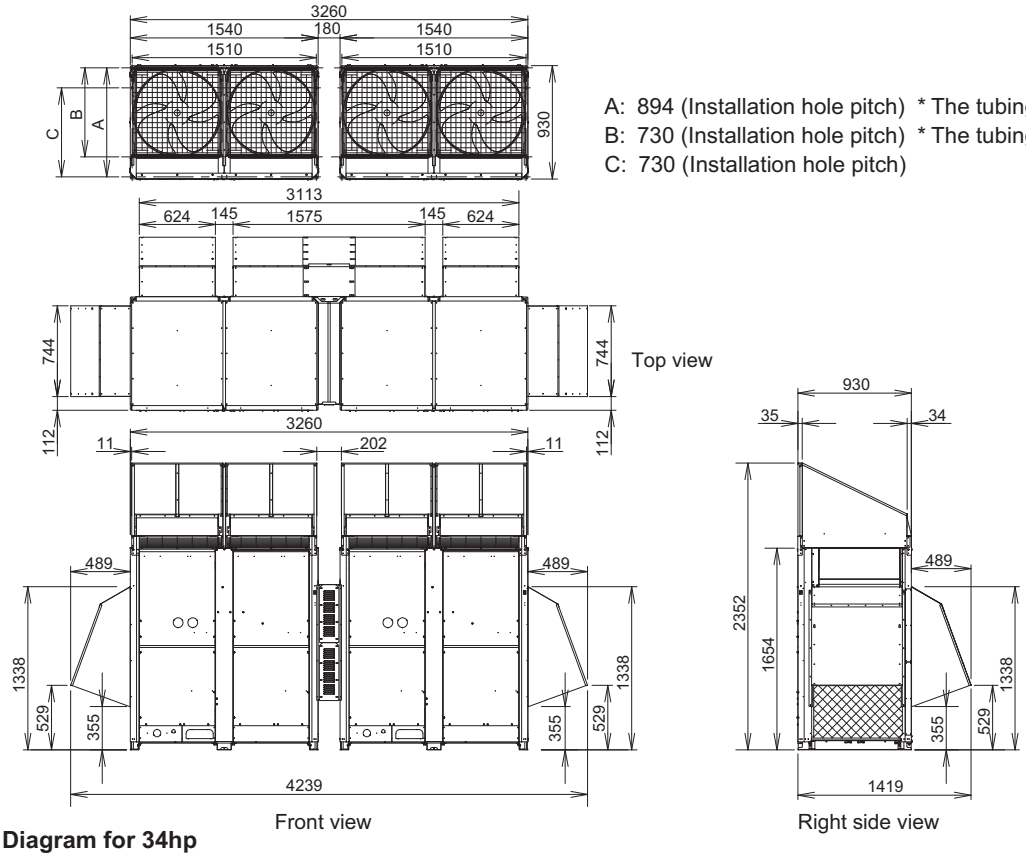

Diagram for 34hp

unit: mm

Air direction: Front direction

A: 894 (Installation hole pitch) * The tubing is routed out from the front.
B: 730 (Installation hole pitch) * The tubing is routed out from the bottom.
C: 730 (Installation hole pitch)

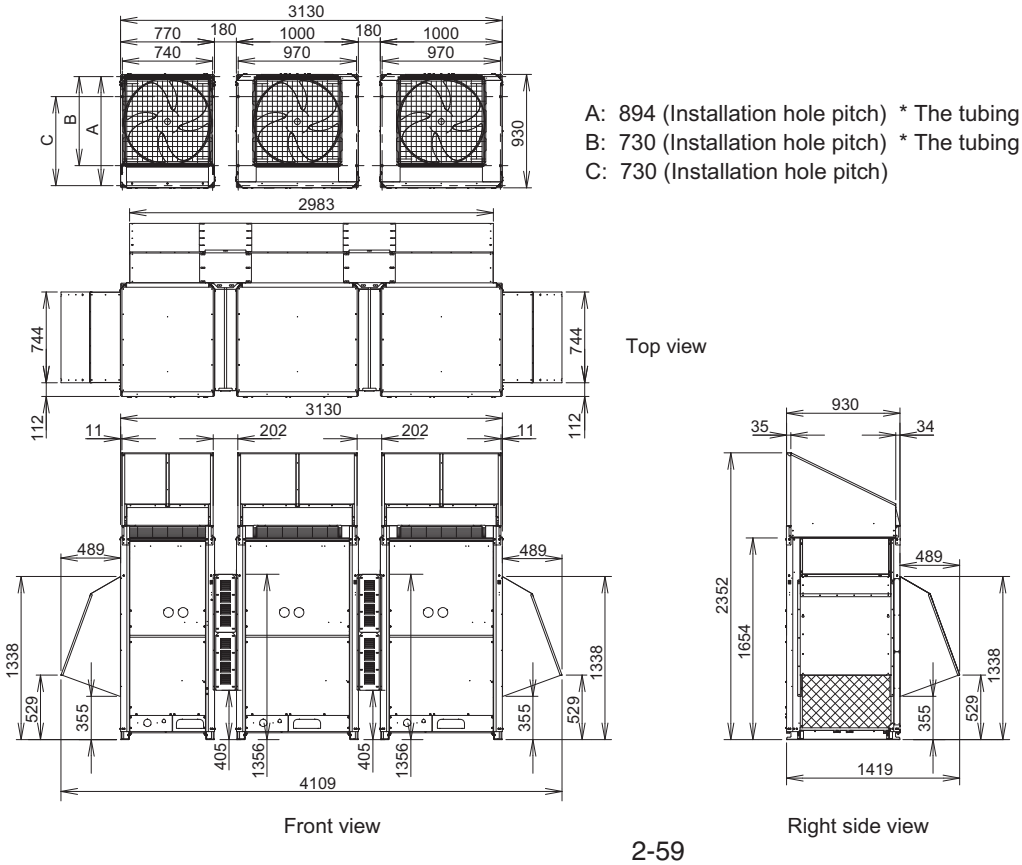

4. Installation Instructions

Reference diagram for snow-proof vents (field supply) (continued)

Unit combinations for High-COP mode

Can be installed so that the air direction is to the front, right, left or rear direction.
According to the installation site, you may choose the setting position in the depth direction of the anchor bolt from “A”, “B” or “C”.
Regarding the field supply parts for the detail diagrams, refer to the section “9. Supplement”.

Diagram for 36hp

unit: mm

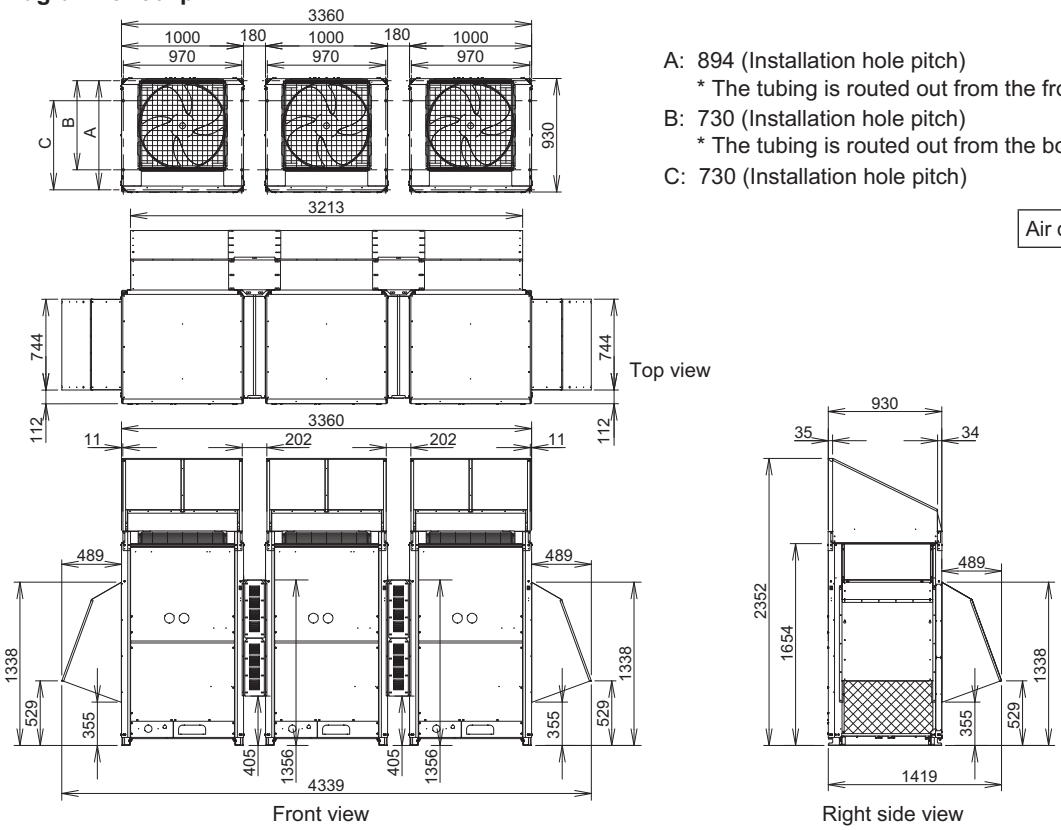

A: 894 (Installation hole pitch)
* The tubing is routed out from the front.
B: 730 (Installation hole pitch)
* The tubing is routed out from the bottom.
C: 730 (Installation hole pitch)

Air direction: Front direction

Diagram for 38hp & 40hp

unit: mm

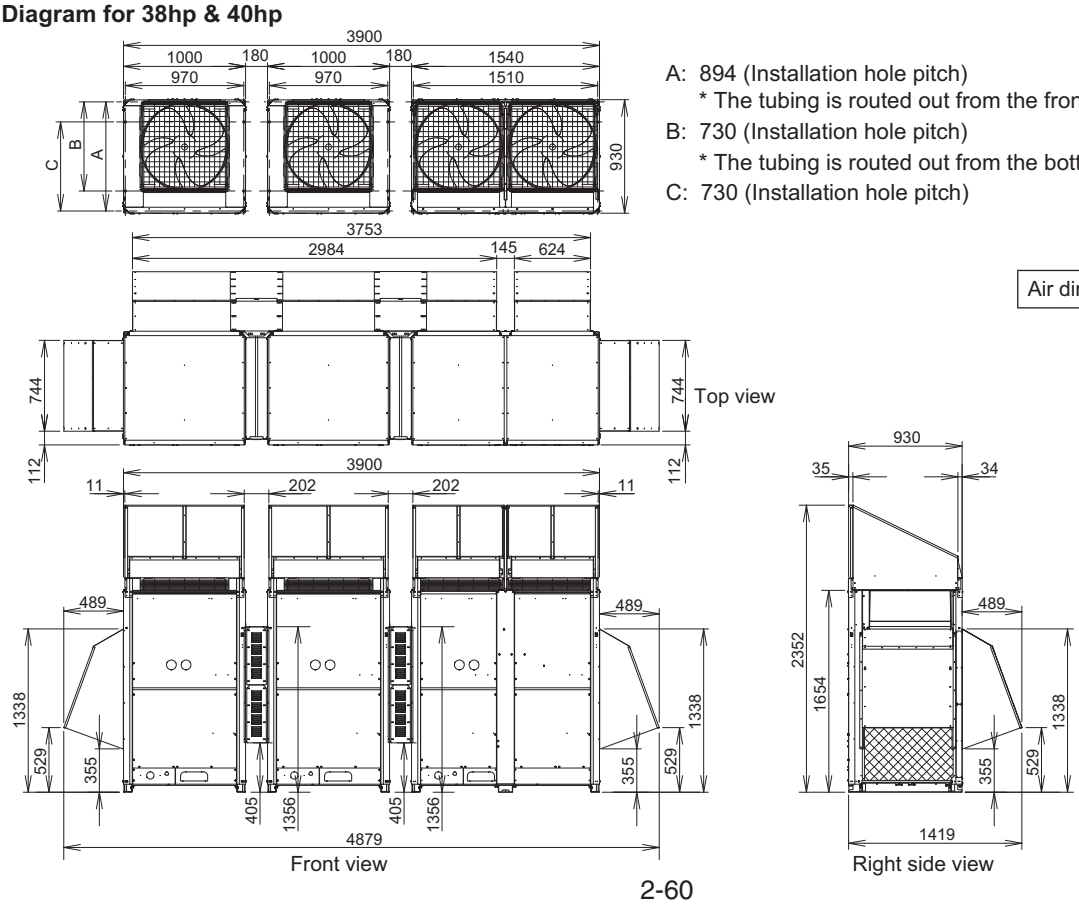

A: 894 (Installation hole pitch)
* The tubing is routed out from the front.
B: 730 (Installation hole pitch)
* The tubing is routed out from the bottom.
C: 730 (Installation hole pitch)

Air direction: Front direction

4. Installation Instructions

Reference diagram for snow-proof vents (field supply) (continued)

Unit combinations for High-COP mode

Can be installed so that the air direction is to the front, right, left or rear direction.
According to the installation site, you may choose the setting position in the depth direction of the anchor bolt from “A”, “B” or “C”.
Regarding the field supply parts for the detail diagrams, refer to the section “9. Supplement”.

Diagram for 42hp

unit: mm

A: 894 (Installation hole pitch)
* The tubing is routed out from the front.

B: 730 (Installation hole pitch)
* The tubing is routed out from the bottom.

C: 730 (Installation hole pitch)

Air direction: Front direction

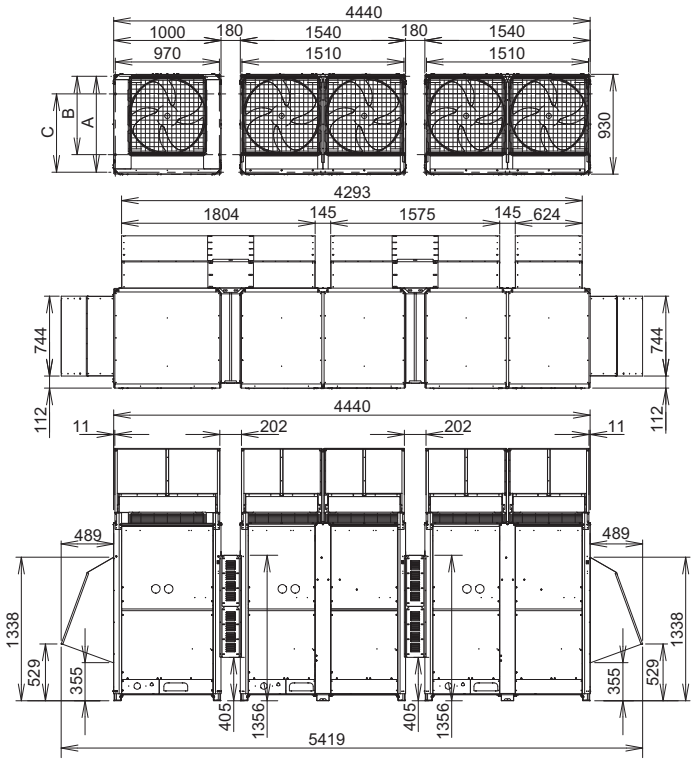

Front view

Top view

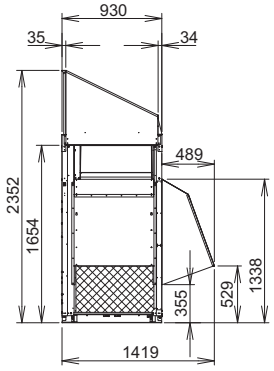

Right side view

Diagram for 44hp ~ 48hp

A: 894 (Installation hole pitch)
* The tubing is routed out from the front.

B: 730 (Installation hole pitch)
* The tubing is routed out from the bottom.

C: 730 (Installation hole pitch)

Air direction: Front direction

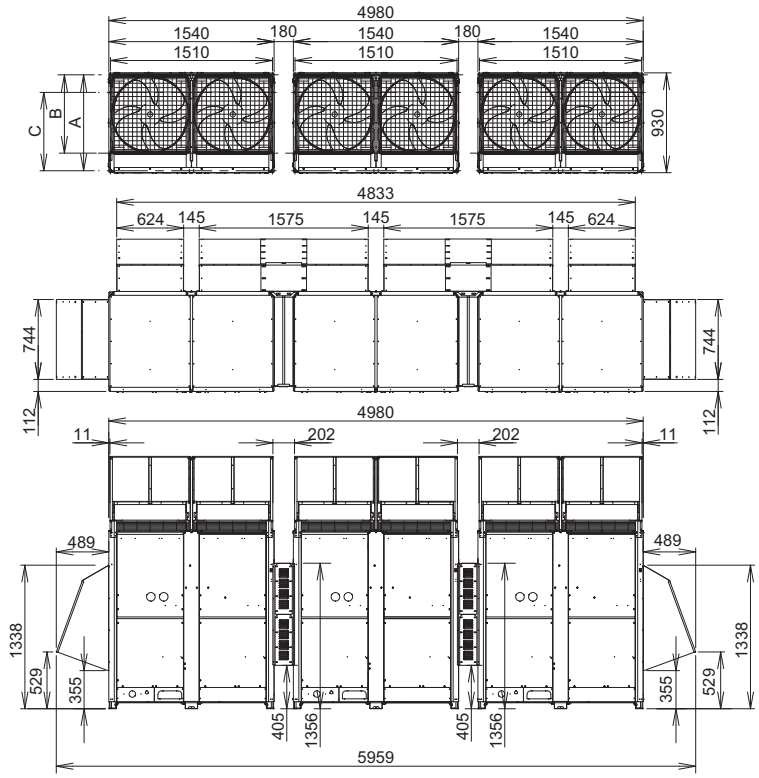

Front view

Top view

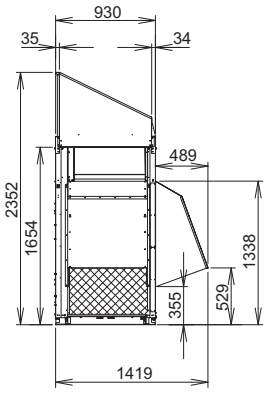

Right side view

4. Installation Instructions

4-7. Transporting the Outdoor Unit

When transporting the unit, have it delivered as close to the installation site as possible without unpacking.
Use a hook for suspending the unit respectively according to the type of model. (Figs. 2-18-1 to 2-18-3)

CAUTION

- When hoisting the outdoor unit, pass ropes through the left and right holes of the bottom plate as shown in the Figs. 2-18-1 to 2-18-3.
  The angle between the rope and top panel must be 70°or more so that the rope does not come into contact with the fan guard.
  Use two lengths of rope 7.5 meters long or longer.
- Hang the rope at an oblique angle of the four corners of the bottom plate.
  If it is hung at other areas, the rope becomes loose and the outdoor unit will be damaged or you may be injured.
- Use protective panels or padding at all locations where the rope contacts the outer casing or other parts to prevent scratching. In particular, use protective material (such as cloth or cardboard) to prevent the edges of the top panel from being scratched.

Model : 14 hp, 16 hp

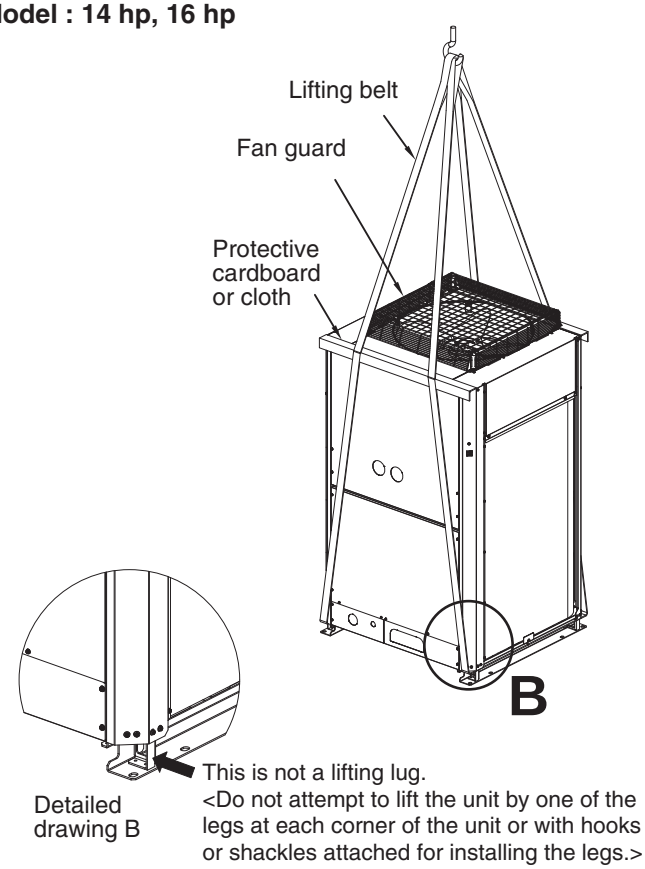

Fig. 2-18-2

Model : 8 hp, 10 hp, 12 hp

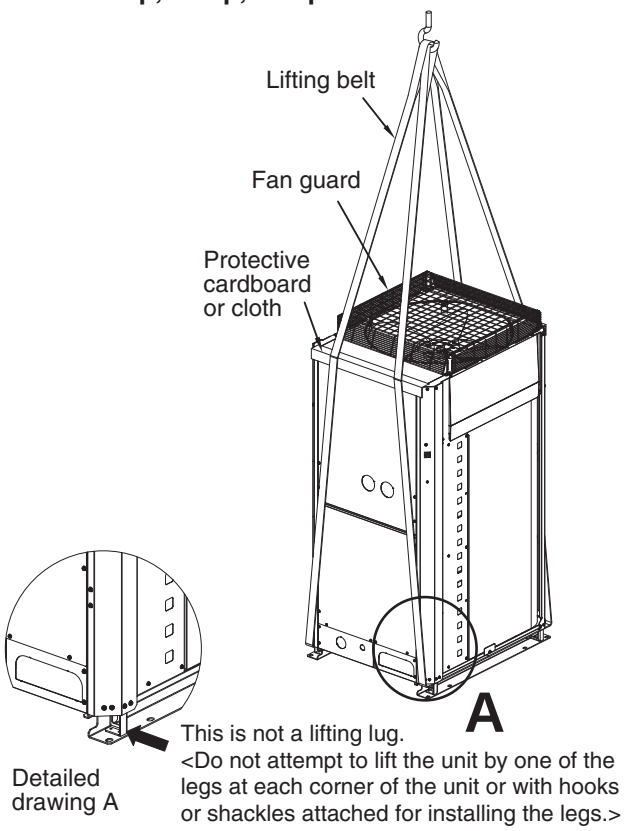

Fig. 2-18-1

Model : 18 hp, 20 hp

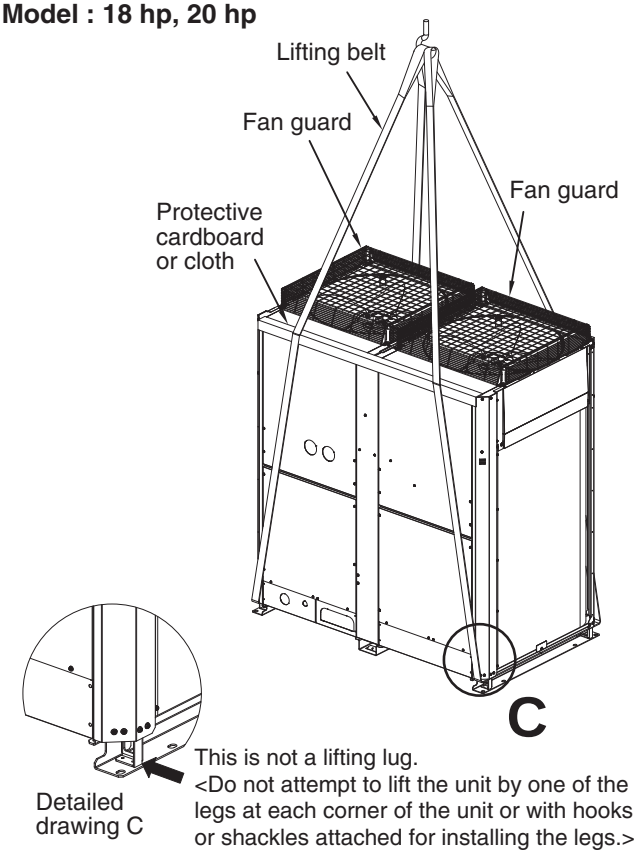

Fig. 2-18-3

4. Installation Instructions

4-8. Installing the Outdoor Unit

(1) Use four (4) anchor bolts (M12 or similar) to securely anchor the unit.
Regarding the positioning anchor bolts of the depth direction, select one of three types according to the installation site. (See Figs. 2-19a-c / “A”, “B” or “C”.)
Normally, select the position “A”. When removing the connection tube in a downward direction, select the position “B”.

(2) When only using a single outdoor unit, see the Figure 2-19a-c.
When making a combination of more than 2 units, refer to pages from 4-15 to 4-33 regarding the confirmation of the unit installation holes and unit size.
* When positioning the anchor bolt at “B” or “C”, make a sufficient space between the units or from the wall for installation. (Make a space between the units wider than 180mm and left and right space wider than 250mm from the wall.)

(3) The vibration insulator or the like should be kept secure to satisfy the width and depth of 100mm for the plate legs. (See the dimensions marked by the asterisk at Fig. 2-21d - 2-21g.) Use a washer from the upper direction larger than the hole size for fixing the installation. The models 18 and 20 have four (4) anchor volts respectively as same as others.
Two models, however, additionally need the vibration insulator under the plate leg at the central location for the installation site.
Screw or wire the vibration insulator at the center of the unit to the rack or the basement.
Be sure to use the same thickness of all vibration insulators and make adjustment so that they will become the same height each other. (Fig. 2-20 and Figs. 2-21a to 2-21g)

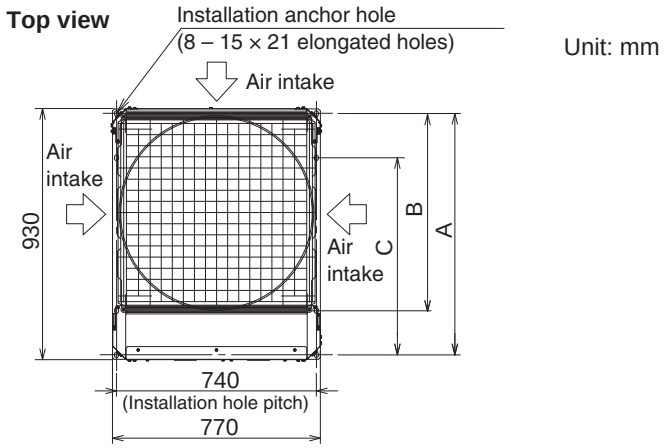

Fig. 2-19a

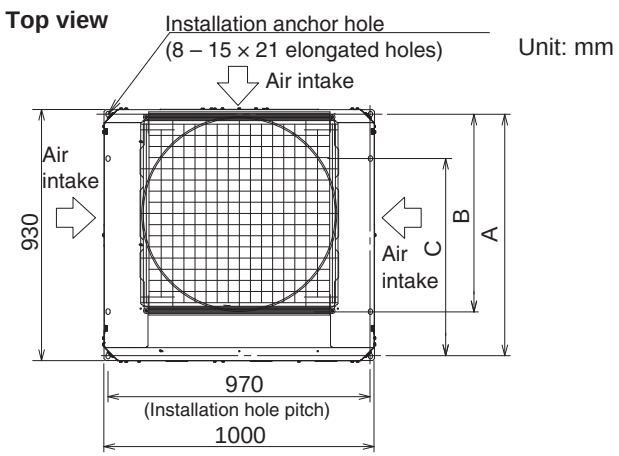

Fig. 2-19b

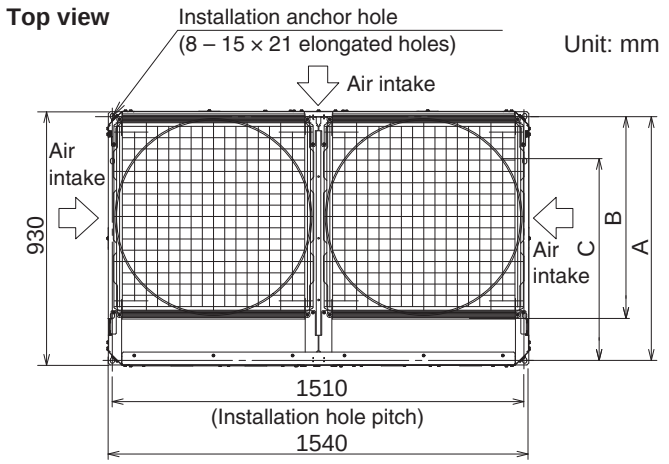

Fig. 2-19c

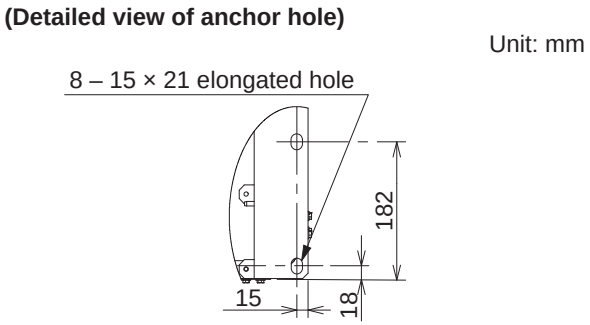

Fig. 2-20

- According to the installation site, you may choose the setting position in the depth direction of the anchor bolt from “A”, “B” or “C”.
  A :894 (Installation hole pitch) * The tubing is routed out from the front.
  B :730 (Installation hole pitch) * The tubing is routed out from the bottom.
  C :730 (Installation hole pitch)

4. Installation Instructions

- Below shows vibration insulator position when setting anchor bolt at position A (Fig.2-19).

Model : 8 hp, 10 hp, 12 hp, 14 hp, 16 hp

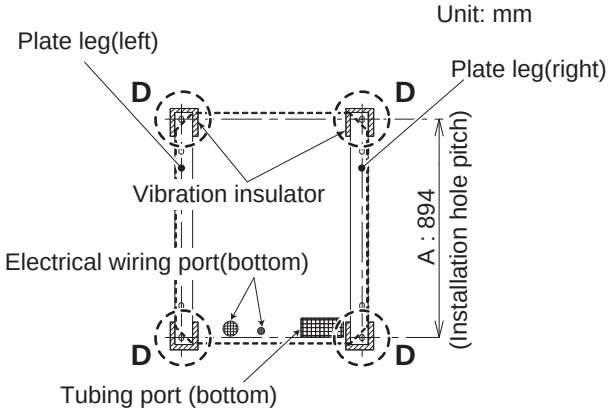

Model : 18 hp, 20 hp

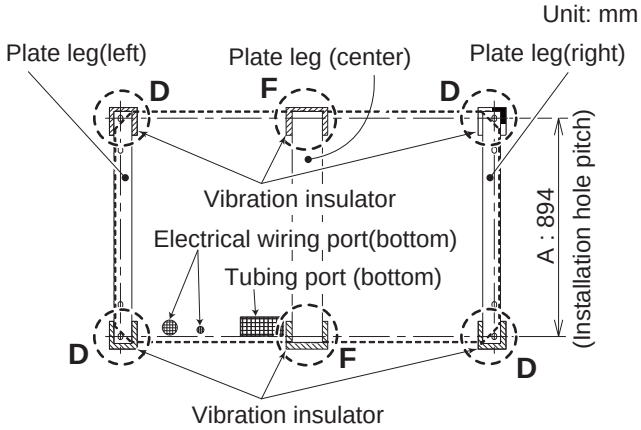

* Need the vibration insulator under the plate leg at the central location for the installation site.

Fig. 2-21a

- Below shows vibration insulator position when setting anchor bolt at position B (Fig.2-19).

Model : 8 hp, 10 hp, 12 hp, 14 hp, 16 hp

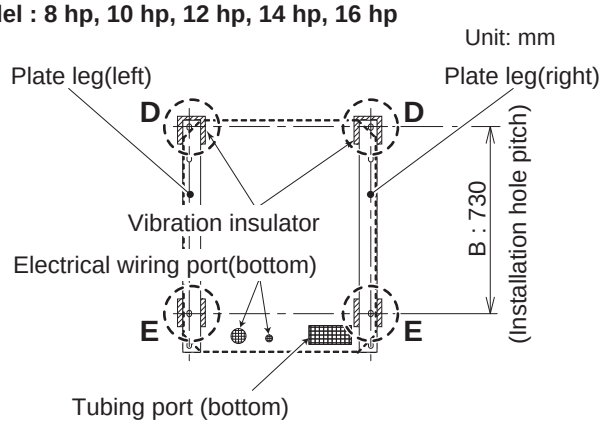

Model : 18 hp, 20 hp

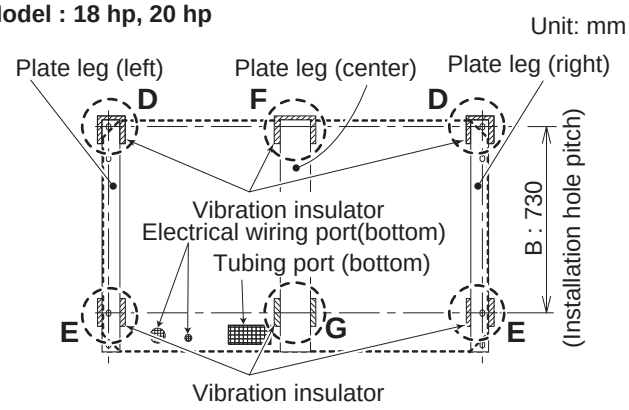

* Need the vibration insulator under the plate leg at the central location for the installation site.

Fig. 2-21b

- Below shows vibration insulator position when setting anchor bolt at position C (Fig.2-19).

Model : 8 hp, 10 hp, 12 hp, 14 hp, 16 hp

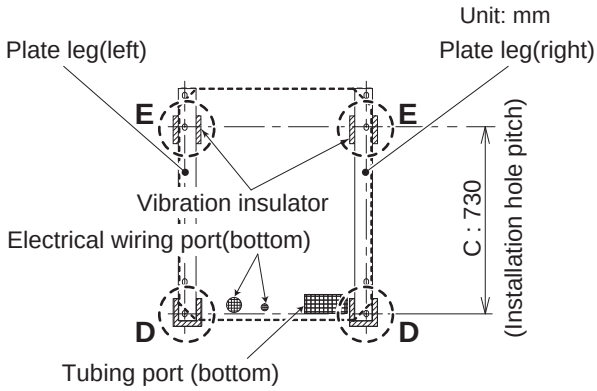

Model : 18 hp, 20 hp

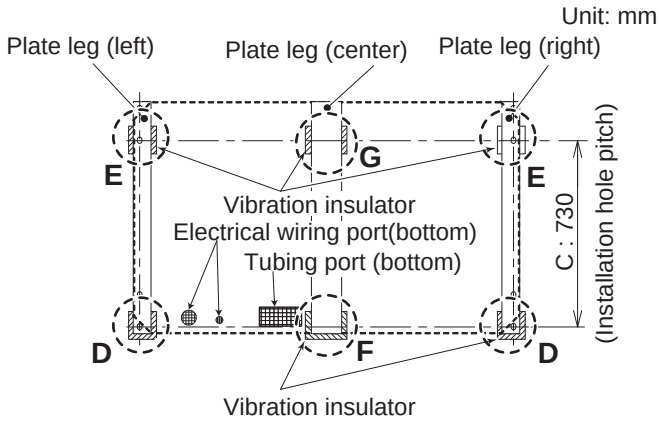

* Need the vibration insulator under the plate leg at the central location for the installation site.

Fig. 2-21c

4. Installation Instructions

Detailed view of “D” & “E”

Front view

Unit: mm

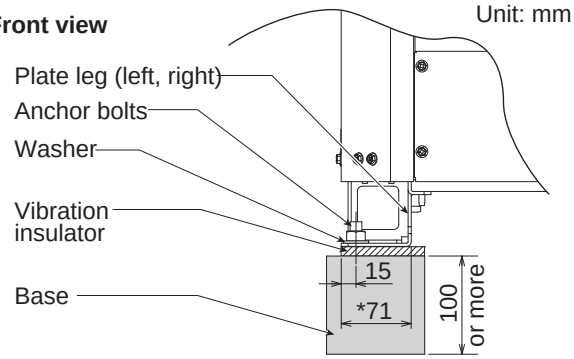

Front view

Fig. 2-21d

Detailed view of “F” & “G”

Front view

Unit: mm

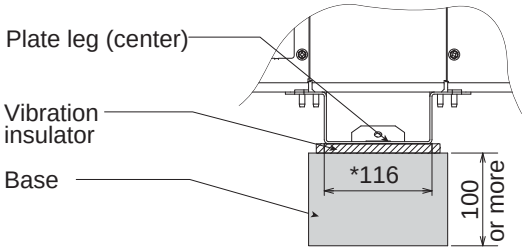

Fig. 2-21e

Detailed view of “E” & “G”

Side view

Unit: mm

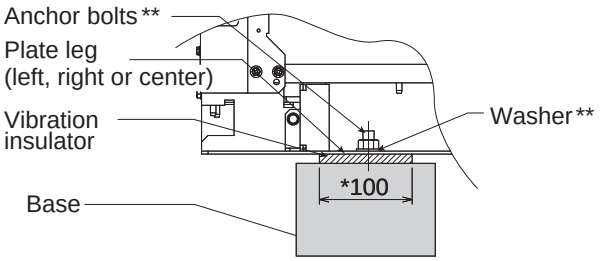

** Anchor bolt & washer are not required at the central plate leg (G).

Fig. 2-21f

Detailed view of “D” & “F ”

Side view

Unit: mm

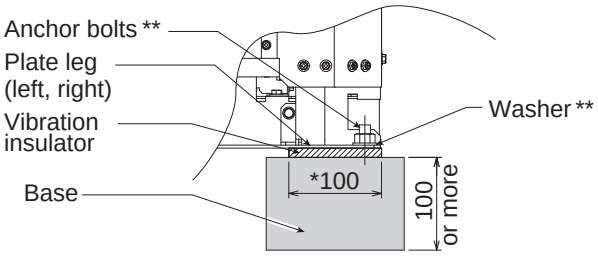

** Anchor bolt & washer are not required at the central plate leg (F).

Fig. 2-21g

2

4. Installation Instructions

4-9. Routing the Tubing

- The tubing can be routed out either from the front or from the bottom. (Fig. 2-22a)
- The connecting valve is contained inside the unit. Therefore, remove the front panel. (Fig. 2-22b)

(1) If the tubing is routed out from the front, punch out the slit part (▨). (Fig. 2-23a)

- Be careful not to damage the tubing cover.

(2) If the tubing is routed out from the bottom, use cutting pliers or a similar tool to cut out the tubing outlet slit (part indicated by ▨) from the tubing cover. (Figs. 2-22c and 2-23b)

- Be careful not to damage the tubing cover.

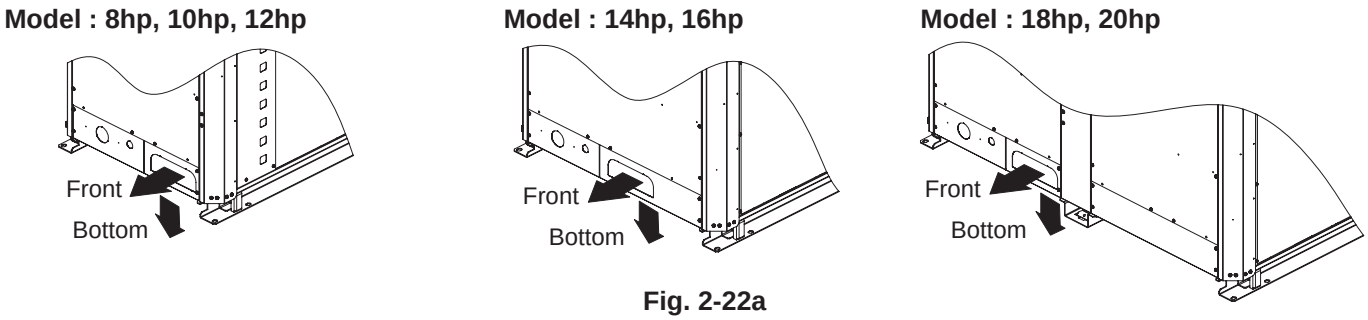

Fig. 2-22a

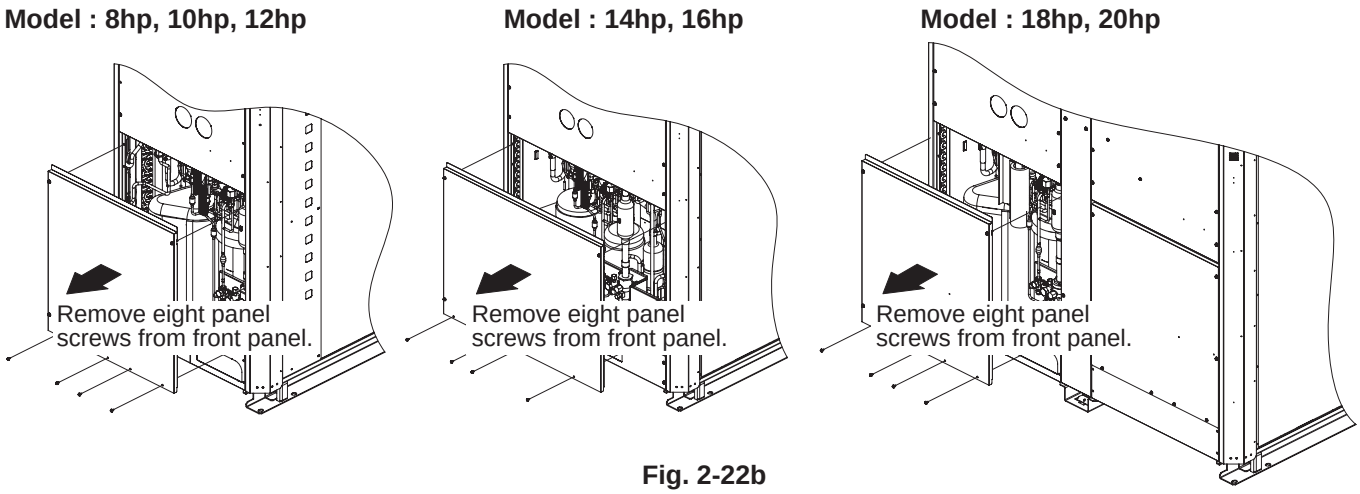

Fig. 2-22b

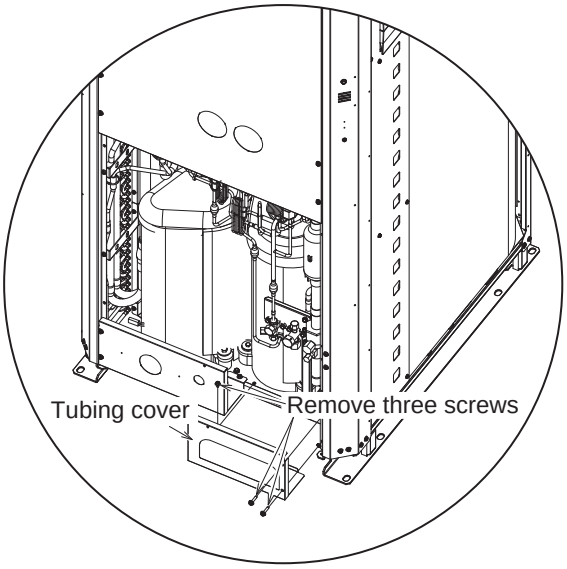

Fig. 2-22c

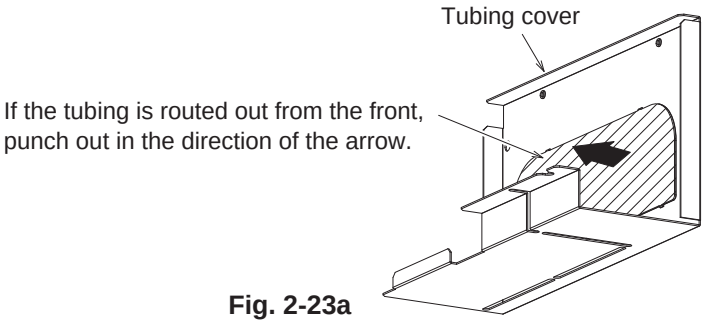

Fig. 2-23a

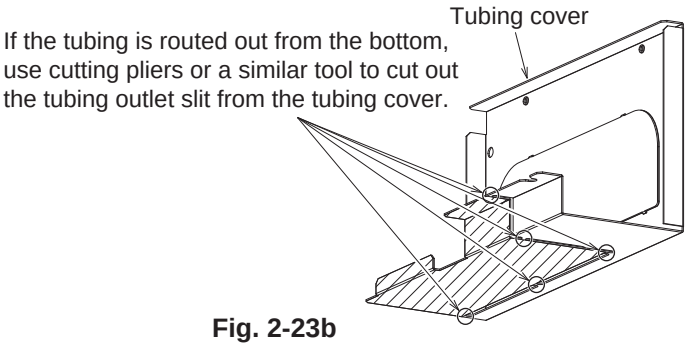

Fig. 2-23b

4. Installation Instructions

4-10. Prepare the Tubing

- Material: Use C1220 phosphorous deoxidized copper as described in JIS H3300, “Copper and Copper Alloy Seamless Pipes and Tubes.” (For tubes that are ø22.22 or larger, use 1/2H material or H material. For all others use O material.)
- Tubing size
  Use the tubing size indicated in the table below.
- When cutting the tubing, use a tube cutter, and be sure to remove any burrs.
  (The same applies to distribution tubing (optional).)
- When bending the tubes, bend each tube using a radius that is at least 4 times the outer diameter of the tube.
  When bending, use sufficient care to avoid crushing or damaging the tube.
- For flaring, use a flare tool, and be sure that flaring is performed correctly.

CAUTION

Use sufficient caution during preparation of the tubing.
Seal the tube ends by means of caps or taping to prevent dust, moisture, or other foreign substances from entering the tubes.

Refrigerant tubing

Tubing size (mm)			
Outer dia.	**Thickness**	**Outer dia.**	**Thickness**
ø6.35	t0.8	ø22.22	t1.0
ø9.52	t0.8	ø25.4	t1.0
ø12.7	t0.8	ø28.58	t1.0
ø15.88	t1.0	ø31.75	t1.1
ø19.05	t1.2	ø38.1	over t1.35
		ø41.28	over t1.45

4. Installation Instructions

4-11. Connect the Tubing

- When operating the refrigerant tube installation in the field, do not apply the flame of welding to the surrounding sheet-metal parts. If necessary, use a wet rag to prevent overheating of the heat exchanger.
- Except for the 16HP model, do not use the supplied connector tubing. (See figure below.)

Model : 8 hp, 10 hp, 12 hp, 14 hp,
18 hp, 20 hp (Except 16 hp)

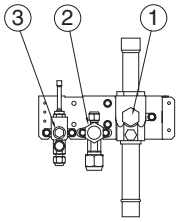

	Refrigerant tubing	Connection method	Supplied parts used?
1	Gas tubing	Brazing	No
2	Liquid tubing	Flare connection	No
3	Balance tube	Flare connection	No

Model : 16 hp

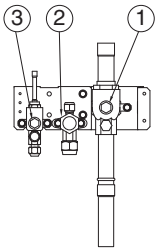

	Refrigerant tubing	Connection method	Supplied parts used?
1	Gas tubing	Brazing	yes ø25.4 → ø28.58
2	Liquid tubing	Flare connection	No
3	Balance tube	Flare connection	No

Refrigerant tube port

- Use caulking, putty, or a similar material to fill any gaps at the refrigerant tube port (▨) in order to prevent rainwater, dust or foreign substances from entering the unit.
  * Perform this work even if the tubing is routed out in a downward direction.

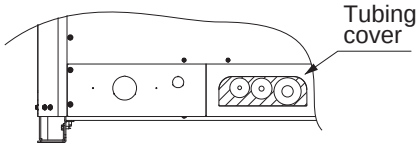

Tubing routed out
through the front side

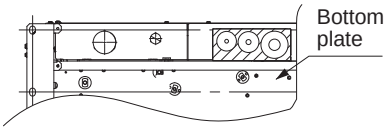

Tubing routed out
through the bottom

4. Installation Instructions

● Tighten each cap as specified below.

Tightening torque for each cap

Cap tightening torque

Service port cap (width 17 mm)		9 – 11 N · m {90 – 110 kgf · cm}
Valve cap	width 14,17, 27 mm	20.0 – 25.0 N · m {200 – 250 kgf · cm}
	width 22 mm	20.6 – 28.4 N · m {206 – 284 kgf · cm}
	width 30 mm	48.0 – 59.8 N · m {480 – 598 kgf · cm}

(Model : 8 hp)

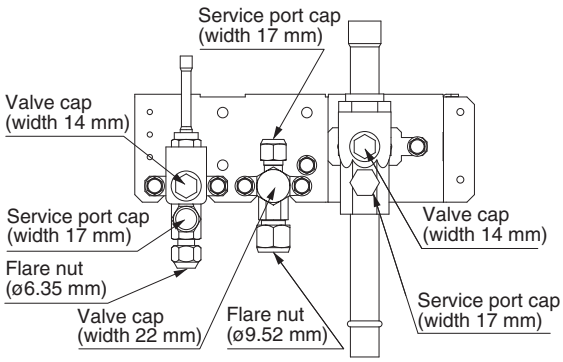

(Model : 10 hp)

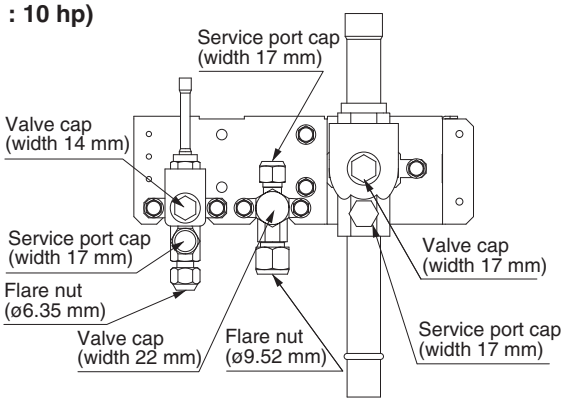

(Model : 12 hp, 14 hp, 16 hp)

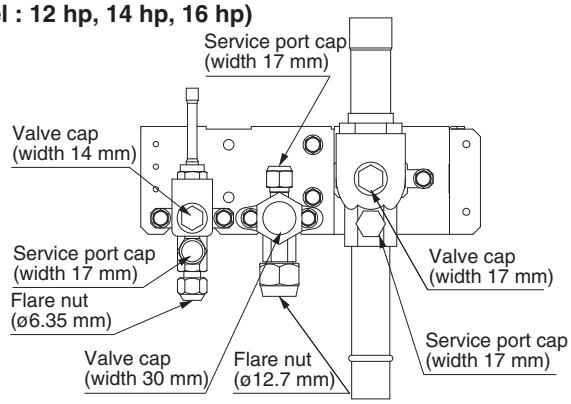

(Model : 18 hp, 20 hp)

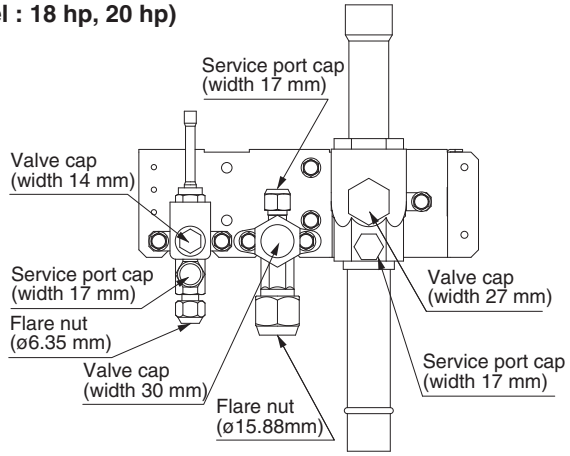

2

4. Installation Instructions

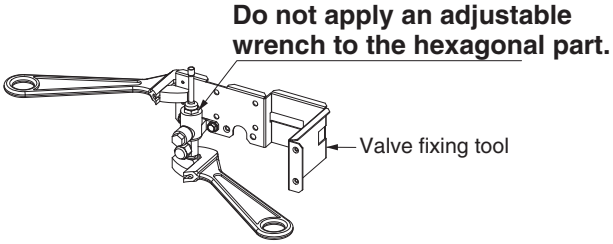

Use two adjustable wrenches when removing or installing the balance tube flare nut.
In particular, do not apply an adjustable wrench to the hexagonal part at the top of the valve.
(If force is applied to this part, gas leakage will occur.)
Apply an adjustable wrench to settle the fixing tool as shown in the figure. If not used, the valve fixing tool will get distorted.

Use two adjustable wrenches, as shown in the figure, when removing the liquid tube valve flare nut.

1. Do not apply a wrench to the valve cap when removing or installing the flare nuts. Doing so may damage the valve.
2. If the valve cap is left off for a long period of time, refrigerant leakage will occur. Therefore, do not leave the valve cap off.
3. Applying refrigerant oil to the flare surface can be effective in preventing gas leakage, however be sure to use a refrigerant oil which is suitable for the refrigerant that is used in the system.

   (This unit utilizes R410A refrigerant, and the refrigerant oil is ether oil (synthetic oil). However, hub oil (synthetic oil) can also be used.)

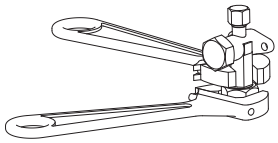

2

● Precautions for brazing
Be sure to replace the air inside the tube with nitrogen to prevent oxide film from forming during the brazing process.
Be sure to use a damp cloth or other means to cool the valve unit during brazing.

Work method

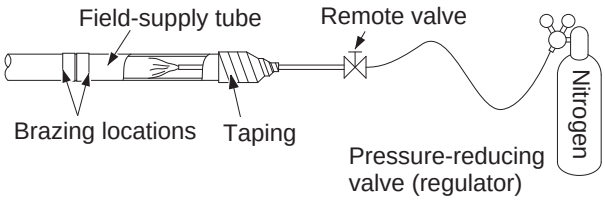

CAUTION

1. Be sure to use nitrogen
   (Oxygen, CO_2, and CFC must not be used.)
2. Use a pressure-reducing valve on the nitrogen tank.
3. Do not use agents intended to prevent the formation of oxide film.
   They will adversely affect the refrigeration oil, and may cause equipment failure.
4. The balance tube is not used if only 1 outdoor unit is installed.
   Use the unit in the same conditions as when it was shipped from the factory.

4. Installation Instructions

- Charging procedure

  Be sure to charge with R410A refrigerant **in liquid form.**

  1. After performing a vacuum, charge with refrigerant from the liquid tubing side. At this time, all valves must be in the “fully closed” position.
  2. If it was not possible to charge the designated amount, operate the system in Cooling mode while charging with refrigerant from the gas tubing side. (This is performed at the time of the test run. For this, all valves must be in the “fully open” position. However if only one outdoor unit is installed, a balance tube is not used.
     Therefore, leave the valves fully closed.) Charge with R410A refrigerant in liquid form.
     With R410A refrigerant, charge while adjusting the amount being fed a little at a time in order to prevent liquid refrigerant from backing up.
- After charging is completed, turn all valves to the “fully open” position.
- Replace the tubing covers as they were before.

CAUTION

1. **R410A additional charging absolutely must be done through liquid charging.**
2. **The R410A refrigerant cylinder has a gray base color, and the top part is pink.**
3. **The R410A refrigerant cylinder includes a siphon tube. Check that the siphon tube is present. (This is indicated on the label at the top of the cylinder.)**
4. **Due to differences in the refrigerant, pressure, and refrigerant oil involved in installation, it is not possible in some cases to use the same tools for R22 and for R410A.**

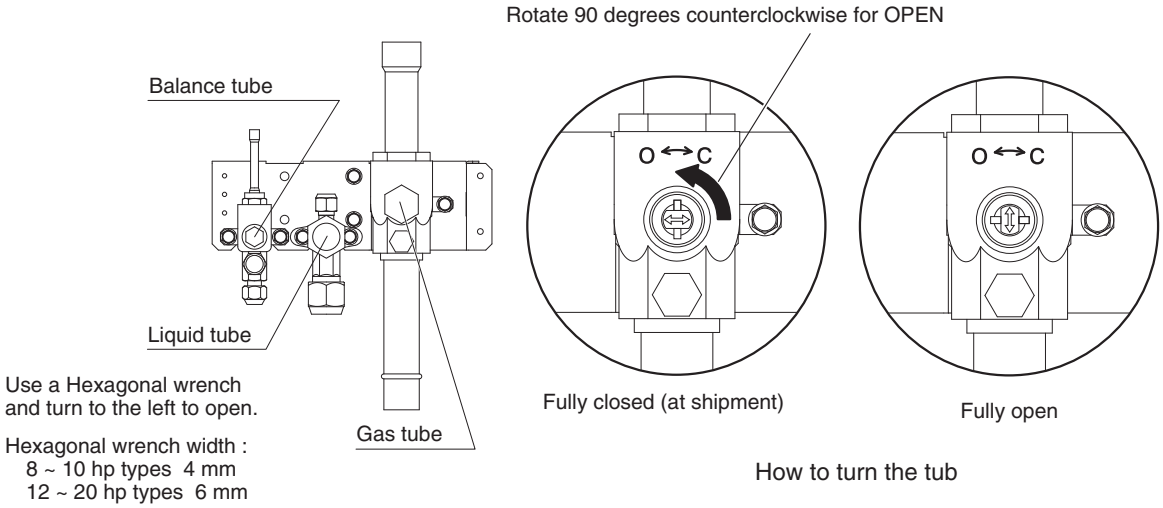

How to turn the tub

4. Installation Instructions

4-12. Selecting the Installation Site for Indoor Unit

AVOID:

- Areas where leakage of flammable gas may be expected.
- Places where large amounts of oil mist exist.
- Direct sunlight.
- Locations near heat sources which may affect the performance of the unit.
- locations where external air may enter the room directly. This may cause “condensation” on the air discharge ports, causing them to spray or drip water.
- Locations where the remote controller will be splashed with water or affected by dampness or humidity.
- Installing the remote controller behind curtains or furniture.
- Locations where high-frequency emissions are generated.
- Places where blocks air passages.
- Places where the false ceiling is not noticeably on an incline.

DO:

- Select an appropriate position from which every corner of the room can be uniformly cooled.
- Select a location where the ceiling is strong enough to support the weight of the unit.
- Select a location where tubing and drain pipe have the shortest run to the outdoor unit.
- Allow room for operation and maintenance as well as unrestricted air flow around the unit.
- Install the unit within the maximum elevation difference above or below the outdoor unit and within a total tubing length (L) from the outdoor unit as detailed in Table 2-1.
- Allow room for mounting the remote controller about 1 m off the floor, in an area that is not in direct sunlight nor in the flow of cool air from the indoor unit. Air delivery will be degraded if the distance from the floor to the ceiling is greater than 3 m (for D1 type, greater than 3.5 m).
- Places where optimum air distribution can be ensured.
- Places where sufficient clearance for maintenance and service can be ensured. (Refer to the diagram.)
- If the indoor unit is installed on the ceiling where the temperature or humidity inside is high (over 30°C/RH: 80%), add insulating material to the surface of the unit to avoid dew condensation. (Only for U1 type.)
- If the indoor unit is installed on the ceiling where the temperature or humidity inside is high (over 30°C/RH: 70%), add insulating material to the surface of the unit to avoid dew condensation. (Only for F2 type.)

NOTE

Air delivery will be degraded if the distance from the floor to the ceiling is greater than 3 m (for D1 type, greater than 3.5 m).

Floor Standing, Concealed Floor Standing Type

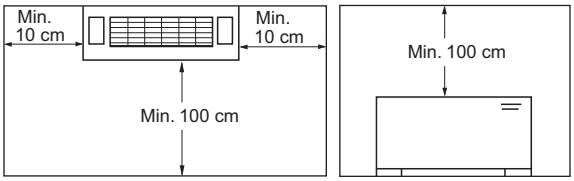

Top view Front view

Fig. 2-27

Ceiling Type

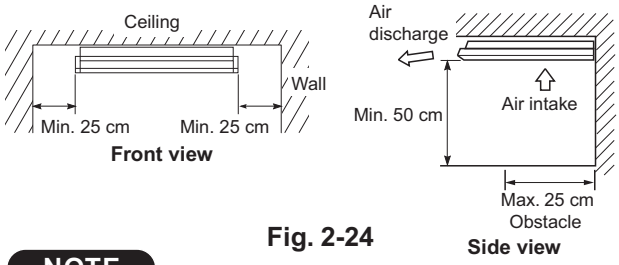

Fig. 2-24

NOTE

The rear of the indoor unit can be installed flush against the wall.

Low Silhouette Ducted Type

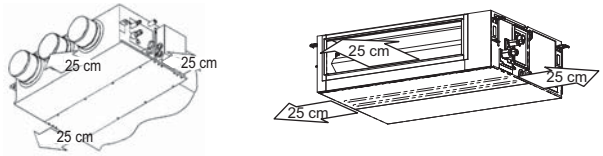

2-Way, 4-Way Cassette Type

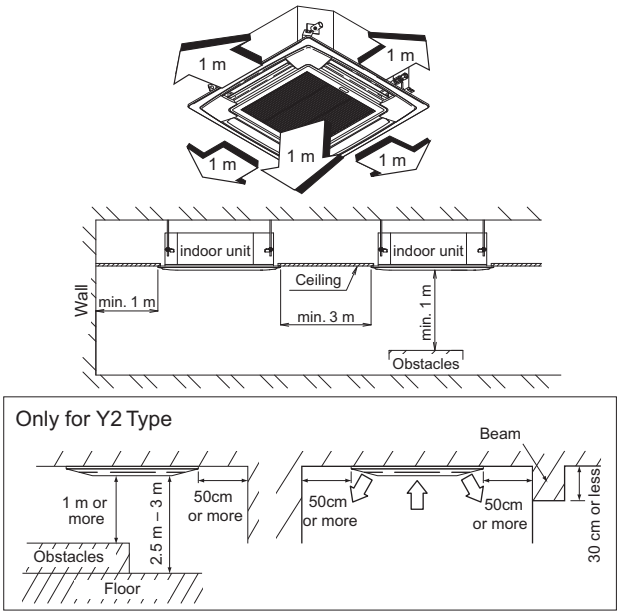

Fig. 2-25

1-Way Cassette Type

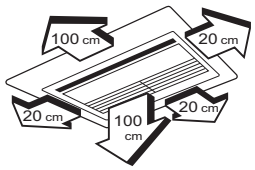

Fig. 2-26

Wall Mounted Type

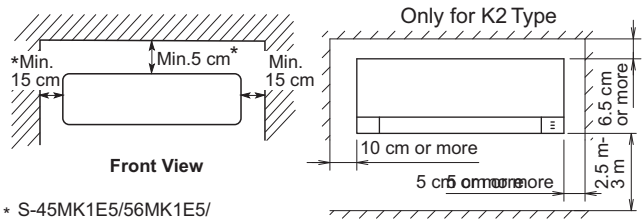

* S-45MK1E5/56MK1E5/73MK1E5/106MK1E5 : Min. 7.5 cm

The air inlet and outlet of the indoor unit must be free of any obstructions to allow air to spread throughout the room.

Fig. 2-28

4. Installation Instructions

4-13. How to install the indoor unit

- **4-Way Cassette Type (U1 Type : S- ∗∗ MU1E51)**

4-13-1. Preparation for Suspending

This unit uses a drain pump. Use a carpenter's level to check that the unit is level.

4-13-2. Suspending the Indoor Unit

(1) Fix the suspension bolts securely in the ceiling using the method shown in the diagrams (Figs. 2-29 and 2-30), by attaching them to the ceiling support structure, or by any other method that ensures that the unit will be securely and safely suspended.

(2) Follow Fig. 2-30 and Table 2-11 to make the holes in the ceiling.

Table 2-11 Unit: mm

Type \ Length	A	B	C	D
22, 28, 36, 45, 56, 60, 73, 90, 106, 140, 160	786	745	860 to 910	860 to 910

(3) Determine the pitch of the suspension bolts using the supplied full-scale installation diagram. The diagram and table (Fig. 2-31 and Table 2-12) show the relationship between the positions of the suspension fitting, unit, and panel.
Use the nut (field supply) and washer (supplied) for upper and lower position of the suspension lug.

Table 2-12 Unit: mm

Type \ Length	A	B	C	D	E
22, 28, 36, 45, 56, 60, 73, 90	121	171	256	180	130
106, 140, 160	121	171	319	180	130

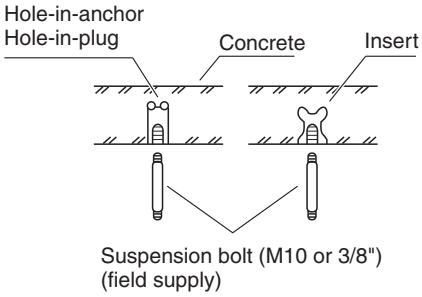

Fig. 2-29

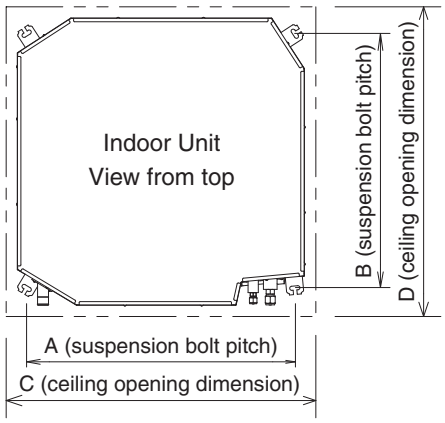

Fig. 2-30

Unit: mm

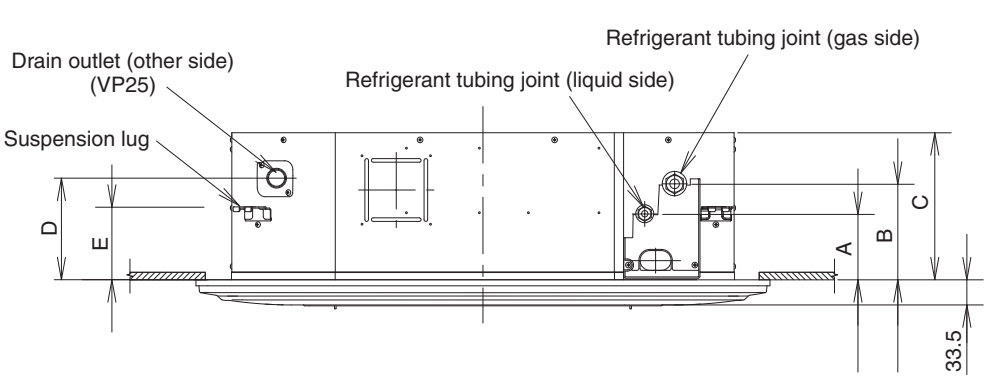

Fig. 2-31

4. Installation Instructions

4-13-3. Placing the Unit Inside the Ceiling

This unit is equipped with the drain pump. Check a tape measure or carpenter's level.
Before installing the ceiling panel, complete the work of drain pipe and refrigerant pipe installation.

(1) When placing the unit inside the ceiling, determine the pitch of the suspension bolts using the supplied full-scale installation diagram. (Fig. 2-32)
Tubing and wiring must be laid inside the ceiling when suspending the unit. If the ceiling is already constructed, lay the tubing and wiring into position for connection to the unit before placing the unit inside the ceiling.
(2) The length of suspension bolts must be appropriate for a distance between the bottom of the bolt and the bottom of the unit of more than 18 mm as shown in Fig. 2-32.
(3) Thread the 3 hexagonal nuts and 2 washers (field supply) onto each of the 4 suspension bolts as shown in Fig. 2-33. Use 1 nut and 1 washer for the upper side, and 2 nuts and 1 washer for the lower side, so that the unit will not fall off the suspension lugs.
(4) Adjust so that the distance between the unit and the ceiling bottom is 12 to 17 mm. Tighten the nuts on the upper side and lower side of the suspension lug.
(5) Remove the protective polyethylene used to protect the fan parts during transport.
(6) Check with a tape measure or carpenter's level.

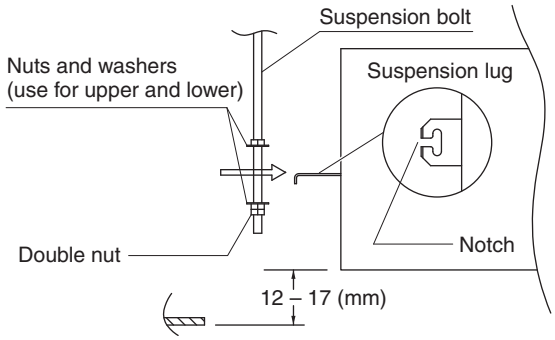

Fig. 2-33

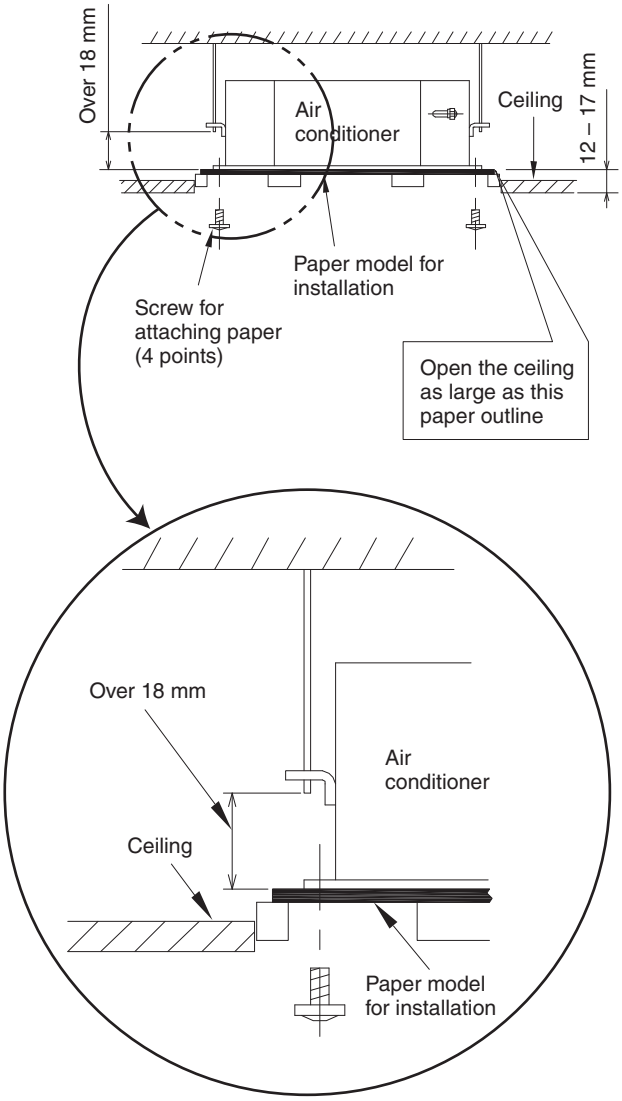

Full-scale installation diagram
(printed on top of container box)

Fig. 2-32

4-13-4. How to Process Tubing

Refer to the section "5. HOW TO PROCESS TUBING".

4. Installation Instructions

4-13-5. Installing the Drain Pipe

4-13-5-1. Before Performing the Installation Drain Piping

(1) Limitations of Raising the Drain Pipe Connection

CAUTION

- The drain pipe can be raised to a maximum height of 850 mm from the bottom surface of the ceiling. Do not attempt to raise it higher than 850 mm. Doing so will result in water leakage. (Fig. 2-34)

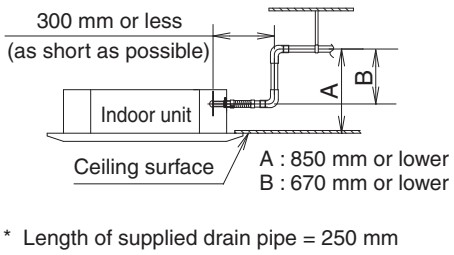

Fig. 2-34

(2) Limitations of Drain Pipe Connection

CAUTION

- Do not install the drain pipe with an upward slant from the drain port connection. This will cause the drain water to flow backward and leak when the unit is not operating. (Fig. 2-35)
- Do not install an air bleeder as this may cause water to spray from the drain pipe outlet. (Fig. 2-35)
- Do not provide U-trap or bell-shaped trap in the middle of the drain pipe. Doing so will cause abnormal sound. (Fig. 2-35)
- Make sure the drain pipe has a downward slant (1/100 or more; downward from drain port connection). (Fig. 2-36)

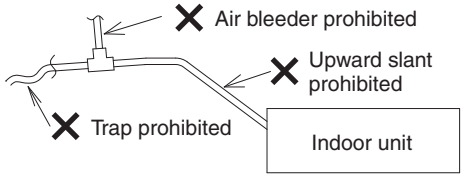

Fig. 2-35

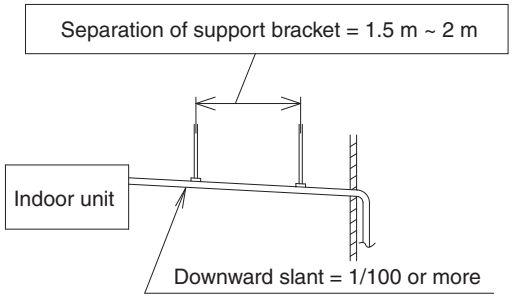

Fig. 2-36

(3) Limitations of Drain Hose Connection

CAUTION

- Do not bend the supplied drain hose 90° or more. Bend it less than 45°. (Fig. 2-37)
- Do not make a trap in the middle of the supplied drain hose. Doing so will cause abnormal sound. (Fig. 2-38)

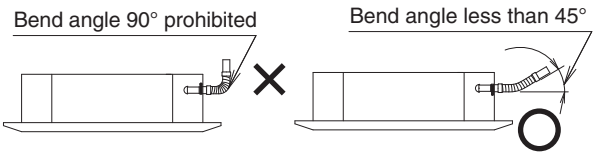

Fig. 2-37

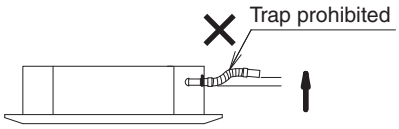

Fig. 2-38

4. Installation Instructions

4-13-5-2. Installing the Drain Pipe

CAUTION

- Do not apply force to the drain port when connecting the drain pipe. Install and fix it near the indoor unit as close as possible.
- Do not use adhesive when connecting the drain port pipe and the drain hose.

(1) How to Install the Drain Pipe

1) First insert the supplied hose band into the drain port pipe. Then make sure the head of the screw is facing toward a technical engineer when placing the screw of the hose band at an upward angle.
2) Insert the soft PVC socket of the supplied drain hose to the drain port pipe. Do not use adhesive when connecting the drain hose to the drain port pipe. Insert it until the tip of the drain hose contacts the circular projection rib of the drain port pipe.
3) Move the hose band so that the center position of the hose band can be placed approx. 30 mm away from the external plate of the indoor unit. (Fig. 2-39)
4) Screw the drain hose tightly facing the screw of the hose band upward. (Torque: 2.5 N·m - 3.4 N·m) (If the screw is tightened beneath the drain hose, the troubles will be occurred.) Pay attention not to make hose band overlap the circular projection rib and the sealed circulation projection of the drain port pipe.
5) Apply approx. 2 g of adhesive on both sides of the drain hose without connection of the hard PVC socket and the hard PVC joint (VP25) in the local supply.
6) Connect the drain hose and the hard PVC joint so that the adhesive area of both sides can be overlapped. Wipe off the protrusion-adhesive with a soft cloth.

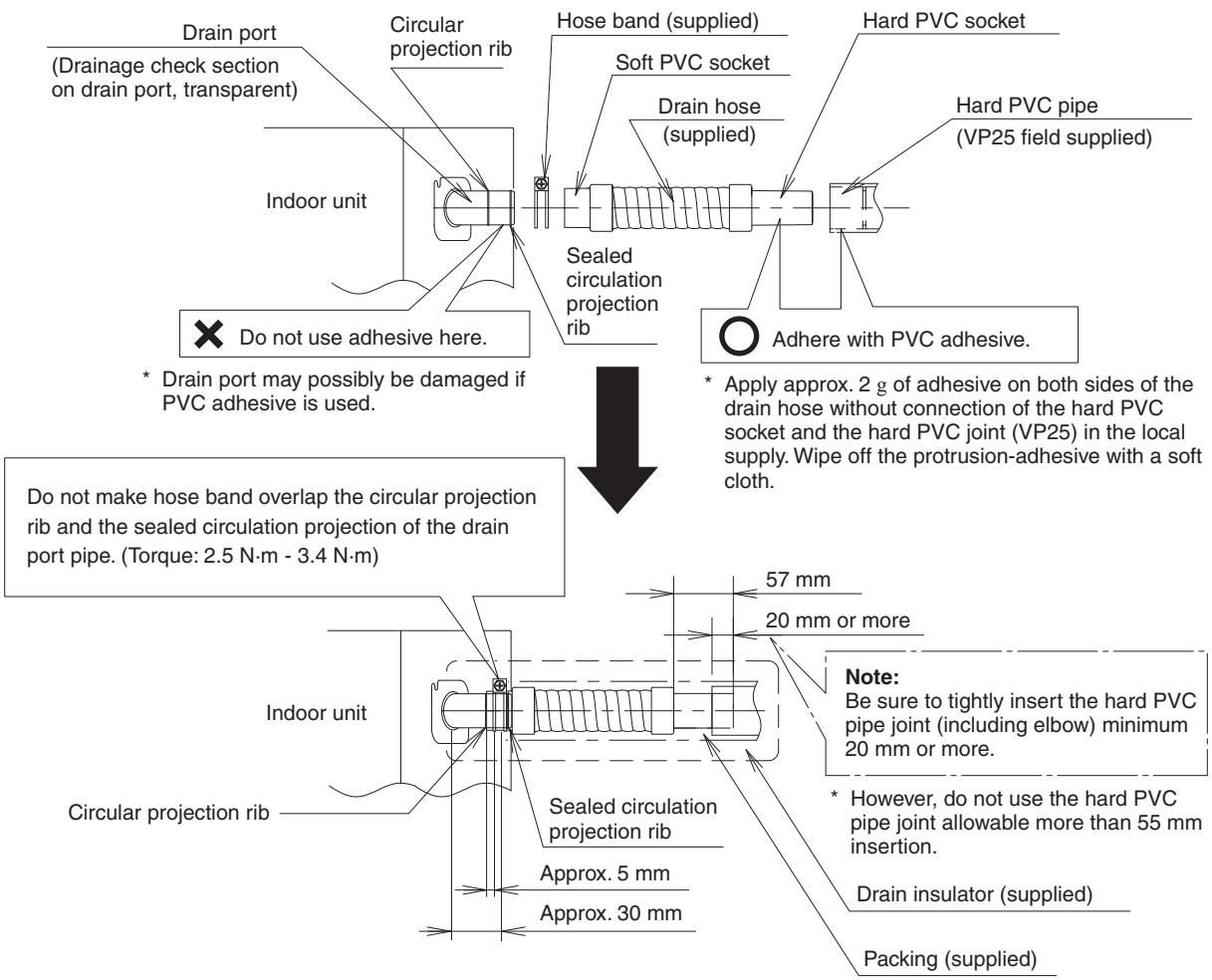

* After checking the drainage, wrap the supplied packing and drain pipe insulator around the pipe.

Fig. 2-39

4. Installation Instructions

4-13-5-3. Checking the Drainage

CAUTION **Be careful since the fan will start when you short the pin on the indoor control board.**

After wiring and drain piping are completed, use the following procedure to check that the water will drain smoothly. For this, prepare a bucket and wiping cloth to catch and wipe up spilled water.

(1) Connect power to the power terminal board (R, S terminals) inside the electrical component box.
(2) Slowly pour about 1,200 cc of water into the drain pan to check drainage. (Fig. 2-40)
(3) Short the check pin (CHK) on the indoor control board and operate the drain pump. Check the water flow through the transparent drain pipe and see if there is any leakage.
(4) When the check of drainage is complete, open the check pin (CHK) and remount the tube cover.
(5) Checkpoint after installation

After installation of indoor and outdoor units, panels and electrical wiring, check the following items.

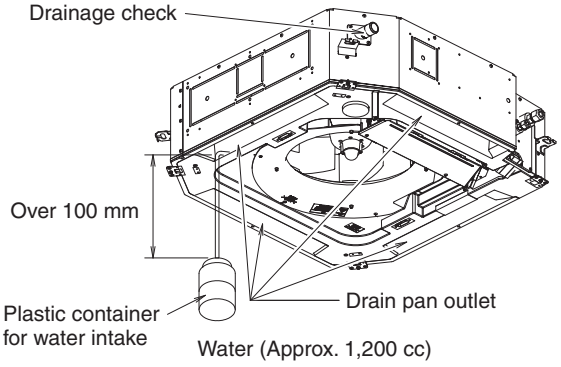

Fig. 2-40

Checkpoint		Symptom	Check	Remark
1	Make sure whether indoor and outdoor units are correctly installed.	Fall, vibration, noise		
2	Make sure whether gas leakage is tested.	No cooling, no heating		
3	Make sure whether insulation is completed. (Refrigerant piping and drain piping)	Water leakage		
4	Make sure whether drain water is running smoothly.	Water leakage		
5	Make sure whether the power voltage matches the nameplate.	Inoperative, burnout		
6	Make sure whether there is miswiring or incorrect connection.	Inoperative, burnout		
7	Make sure whether the ground construction is completed.	Ground leakage		
8	Make sure whether the wire gauge is followed by the recommended specifications.	Inoperative, burnout		
9	Make sure whether the air intake and air outlet of the indoor and outdoor units are sealed by obstacles.	No cooling, no heating		

4. Installation Instructions

4-13-6. Important Note for Wiring 4-Way Cassette Type

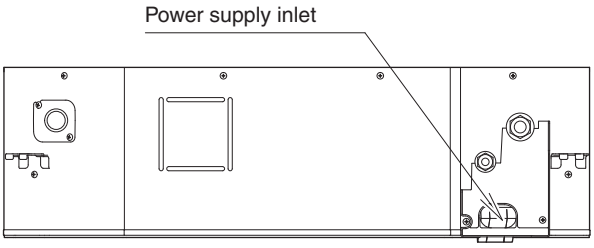

(1) The power supply inlet is located at the lower area of the refrigerant tubing side of the unit. The electrical component box is located at the air intake of the bottom of the unit.

(2) Before installing the ceiling panel, be sure to carry out the wiring connection.

(3) Remove the lid located on the bottom of the indoor unit attaching the electrical component box by unscrewing the Phillips head tapping screws (×2).

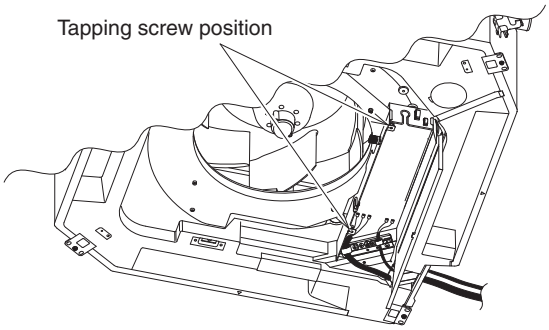

(4) Lead the wires from the power supply inlet to the unit. Be sure to lead the wires through the power supply inlet. Make sure that no wire is caught between the indoor unit and ceiling panel. Otherwise, the unit may cause a fire.

(5) Connect the wires into the terminals through the power supply inlet for the electrical component box. Fix the wires with a clamping clip.

(6) Reinstall the lid of the electrical component box in its original position with paying attention not to have the wires caught in the lid. Refer to “3. Electrical Wiring”.

4. Installation Instructions

● 4-Way Cassette Type (U1 Type : S- ∗∗ MU1E5)

4-13-7. Preparation for Suspending

This unit uses a drain pump. Use a carpenter's level to check that the unit is level.

4-13-8. Suspending the Indoor Unit

(1) Fix the suspension bolts securely in the ceiling using the method shown in the diagrams (Figs. 2-41 and 2-42), by attaching them to the ceiling support structure, or by any other method that ensures that the unit will be securely and safely suspended.

(2) Follow Fig. 2-42 and Table 2-13 to make the holes in the ceiling.

Table 2-13 Unit: mm

Type \ Length	A	B	C	D
22, 28, 36, 45, 56, 73, 106, 140, 160	786	745	860 to 910	860 to 910

(3) Determine the pitch of the suspension bolts using the supplied full-scale installation diagram. The diagram and table (Fig. 2-43 and Table 2-14) show the relationship between the positions of the suspension fitting, unit, and panel.
Use the nut (field supply) and washer (supplied) for upper and lower position of the suspension lug.

Table 2-14 Unit: mm

Type \ Length	A	B	C	D	E
22, 28, 36, 45, 56	121	171	256	180	130
73, 106, 140, 160	121	171	319	180	130

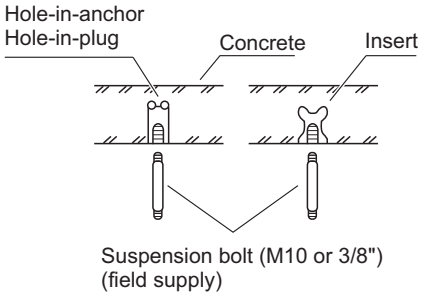

Fig. 2-41

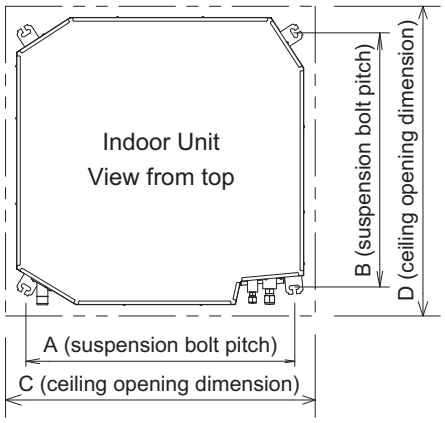

Fig. 2-42

Unit: mm

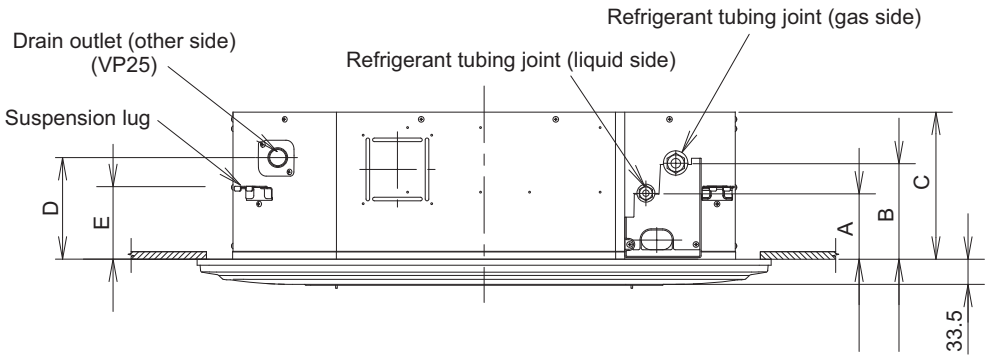

Fig. 2-43

4-13-9. Placing the Unit Inside the Ceiling

This unit is equipped with the drain pump. Check a tape measure or carpenter's level.
Before installing the ceiling panel, complete the work of drain pipe and refrigerant pipe installation.

(1) When placing the unit inside the ceiling, determine the pitch of the suspension bolts using the supplied full-scale installation diagram. (Fig. 2-44)
Tubing and wiring must be laid inside the ceiling when suspending the unit. If the ceiling is already constructed, lay the tubing and wiring into position for connection to the unit before placing the unit inside the ceiling.

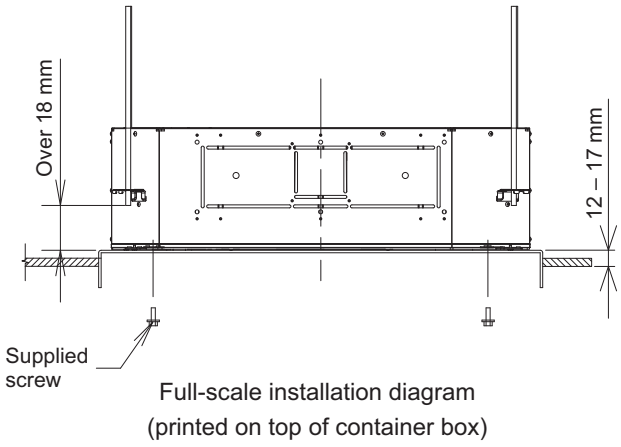

Fig. 2-44

4. Installation Instructions

(2) The length of suspension bolts must be appropriate for a distance between the bottom of the bolt and the bottom of the unit of more than 18 mm as shown in Fig. 2-44.
(3) Thread the 3 hexagonal nuts and 2 washers (field supply) onto each of the 4 suspension bolts as shown in Fig. 2-45. Use 1 nut and 1 washer for the upper side, and 2 nuts and 1 washer for the lower side, so that the unit will not fall off the suspension lugs.
(4) Adjust so that the distance between the unit and the ceiling bottom is 12 to 17 mm. Tighten the nuts on the upper side and lower side of the suspension lug.
(5) Remove the protective polyethylene used to protect the fan parts during transport.
(6) Check with a tape measure or carpenter's level.

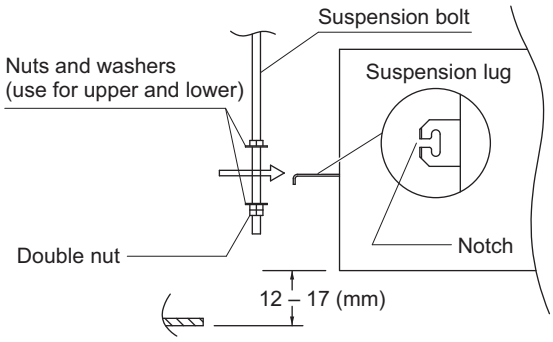

Fig. 2-45

4-13-10. How to Process Tubing

Refer to the section "5. HOW TO PROCESS TUBING".

4-13-11. Installing the Drain Pipe

4-13-11-1 Before Performing the Installation Drain Piping

2

(1) Limitations of Raising the Drain Pipe Connection

CAUTION

- The drain pipe can be raised to a maximum height of 850 mm from the bottom surface of the ceiling. Do not attempt to raise it higher than 850 mm. Doing so will result in water leakage. (Fig. 2-46)

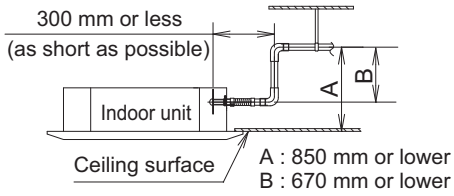

* Length of supplied drain pipe = 250 mm

Fig. 2-46

(2) Limitations of Drain Pipe Connection

CAUTION

- Do not install the drain pipe with an upward slant from the drain port connection. This will cause the drain water to flow backward and leak when the unit is not operating. (Fig. 2-47)
- Do not install an air bleeder as this may cause water to spray from the drain pipe outlet. (Fig. 2-47)
- Do not provide U-trap or bell-shaped trap in the middle of the drain pipe. Doing so will cause abnormal sound. (Fig. 2-47)
- Make sure the drain pipe has a downward slant (1/100 or more; downward from drain port connection). (Fig. 2-48)

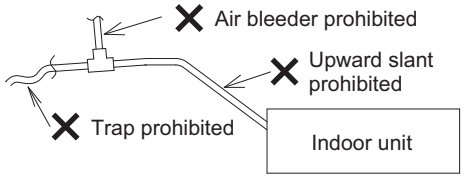

Fig. 2-47

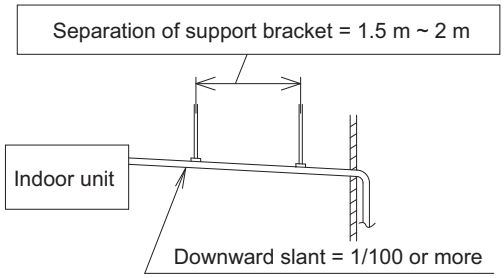

Fig. 2-48

(3) Limitations of Drain Hose Connection

CAUTION

- Do not bend the supplied drain hose 90° or more. Bend it less than 45°. (Fig. 2-49)
- Do not make a trap in the middle of the supplied drain hose. Doing so will cause abnormal sound. (Fig. 2-50)

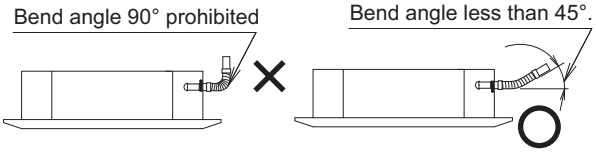

Fig. 2-49

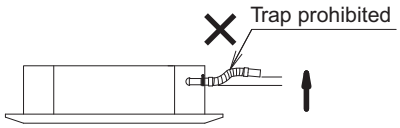

Fig. 2-50

4. Installation Instructions

4-13-11-2. Installing the Drain Pipe

CAUTION

- Do not apply force to the drain port when connecting the drain pipe. Install and fix it near the indoor unit as close as possible.
- Do not use adhesive when connecting the drain port pipe and the drain hose.

(1) How to Install the Drain Pipe

1) First insert the supplied hose band into the drain port pipe. Then make sure the head of the screw is facing toward a technical engineer when placing the screw of the hose band at an upward angle.
2) Insert the soft PVC socket of the supplied drain hose to the drain port pipe. Do not use adhesive when connecting the drain hose to the drain port pipe. Insert it until the tip of the drain hose contacts the circular projection rib of the drain port pipe.
3) Move the hose band so that the center position of the hose band can be placed approx. 30 mm away from the external plate of the indoor unit. (Fig. 2-51)
4) Screw the drain hose tightly facing the screw of the hose band upward. (Torque: 2.5 N·m - 3.4 N·m) (If the screw is tightened beneath the drain hose, the troubles will be occurred.) Pay attention not to make hose band overlap the circular projection rib and the sealed circulation projection of the drain port pipe.
5) Apply approx. 2 g of adhesive on both sides of the drain hose without connection of the hard PVC socket and the hard PVC joint (VP25) in the local supply.
6) Connect the drain hose and the hard PVC joint so that the adhesive area of both sides can be overlapped. Wipe off the protrusion-adhesive with a soft cloth.

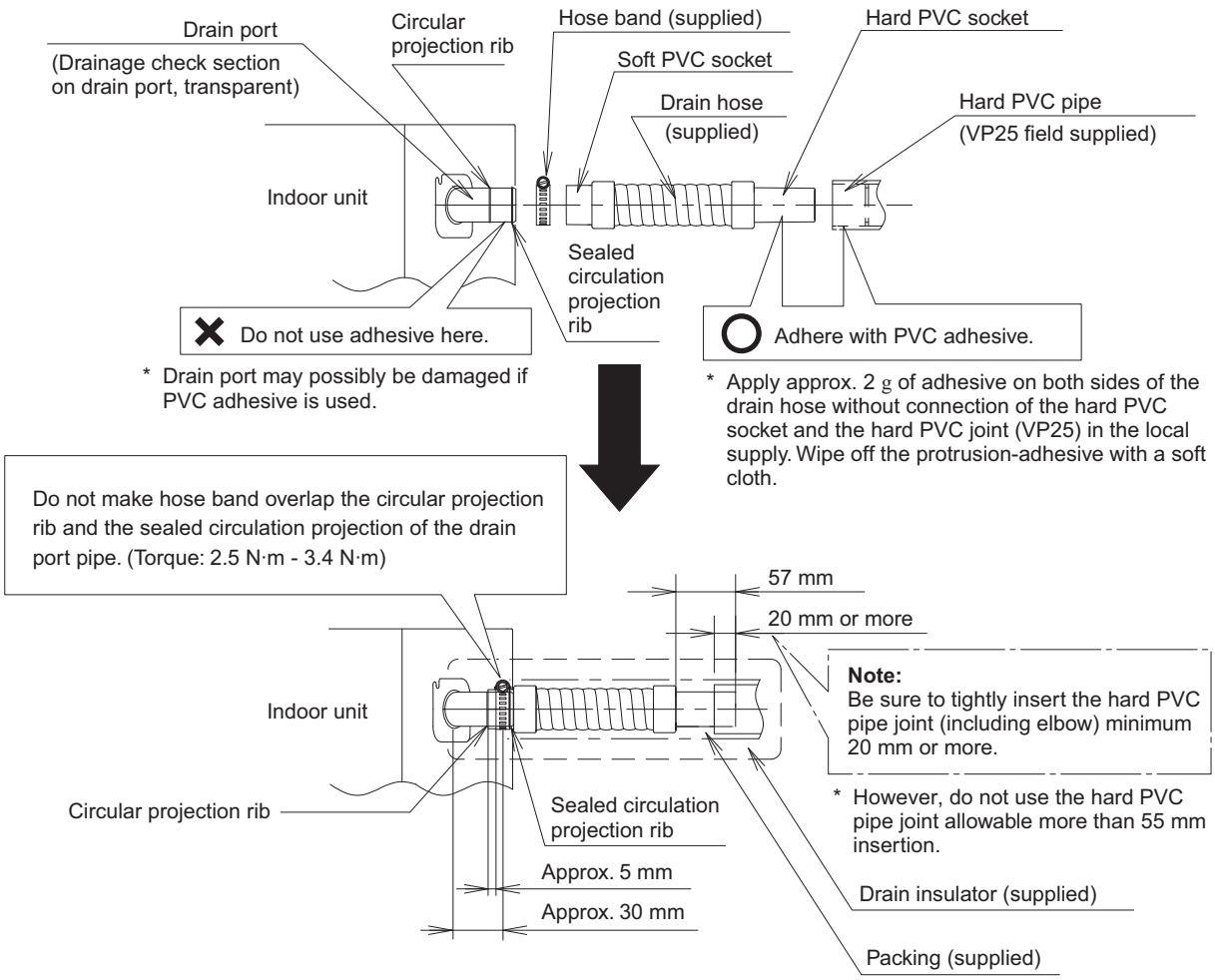

* After checking the drainage, wrap the supplied packing and drain pipe insulator around the pipe.

Fig. 2-51

4. Installation Instructions

4-13-11-3. Checking the Drainage

CAUTION **Be careful since the fan will start when you short the pin on the indoor control board.**

After wiring and drain piping are completed, use the following procedure to check that the water will drain smoothly. For this, prepare a bucket and wiping cloth to catch and wipe up spilled water.

(1) Connect power to the power terminal board (R, S terminals) inside the electrical component box.
(2) Slowly pour about 1,200 cc of water into the drain pan to check drainage. (Fig. 2-52)
(3) Short the check pin (CHK) on the indoor control board and operate the drain pump. Check the water flow through the transparent drain pipe and see if there is any leakage.
(4) When the check of drainage is complete, open the check pin (CHK) and remount the tube cover.
(5) Checkpoint after installation

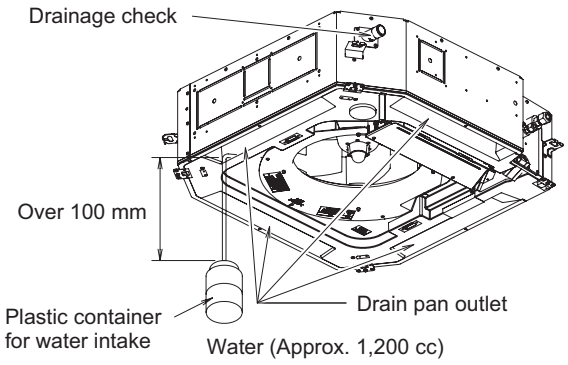

Fig. 2-52

After installation of indoor and outdoor units, panels and electrical wiring, check the following items.

	Checkpoint	Symptom	Check	Remark
1	Make sure whether indoor and outdoor units are correctly installed.	Fall, vibration, noise		
2	Make sure whether gas leakage is tested.	No cooling, no heating		
3	Make sure whether insulation is completed. (Refrigerant piping and drain piping)	Water leakage		
4	Make sure whether drain water is running smoothly.	Water leakage		
5	Make sure whether the power voltage matches the nameplate.	Inoperative, burnout		
6	Make sure whether there is miswiring or incorrect connection.	Inoperative, burnout		
7	Make sure whether the ground construction is completed.	Ground leakage		
8	Make sure whether the wire gauge is followed by the recommended specifications.	Inoperative, burnout		
9	Make sure whether the air intake and air outlet of the indoor and outdoor units are sealed by obstacles.	No cooling, no heating		

4. Installation Instructions

4-13-12. Important Note for Wiring 4-Way Cassette Type

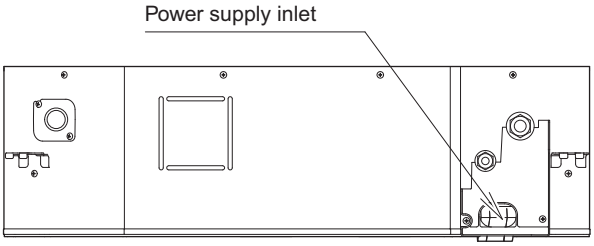

(1) The power supply inlet is located at the lower area of the refrigerant tubing side of the unit.
The electrical component box is located at the air intake of the bottom of the unit.
(2) Before installing the ceiling panel, be sure to carry out the wiring connection.
(3) Remove the lid located on the bottom of the indoor unit attaching the electrical component box by unscrewing the Phillips head tapping screws (x2).

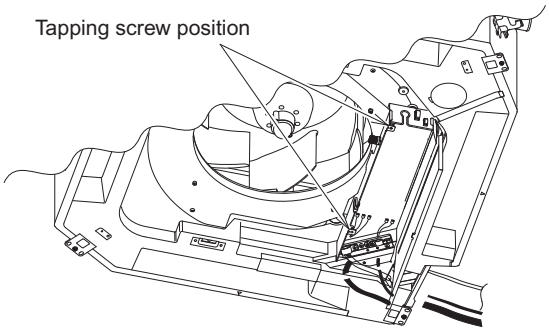

(4) Lead the wires from the power supply inlet to the unit. Be sure to lead the wires through the power supply inlet.
Make sure that no wire is caught between the indoor unit and ceiling panel. Otherwise, the unit may cause a fire.
(5) Connect the wires into the terminals through the power supply inlet for the electrical component box.
Fix the wires with a clamping clip.
(6) Reinstall the lid of the electrical component box in its original position with paying attention not to have the wires caught in the lid. Refer to “3. Electrical Wiring”.

4. Installation Instructions

● 4-Way Cassette 60x60 Type (Y1 Type)

4-13-13. Preparation for Ceiling Suspension

This unit uses a drain pump. Use a carpenter's level to check that the unit is level.

4-13-14. Mounting the Suspension Bolts

(1) Fix the suspension bolts securely to the ceiling using the method shown in the diagrams (Figs. 2-53 and 2-54), by attaching them to the ceiling support structure, or by any other method that ensures that the unit will be securely and safely suspended.

(2) Follow the diagram to make the holes in the ceiling. (Refer to Fig. 2-54)

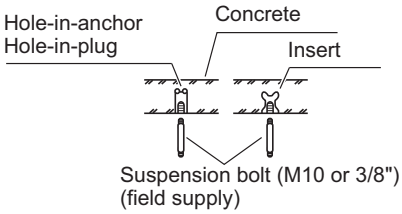

Fig. 2-53

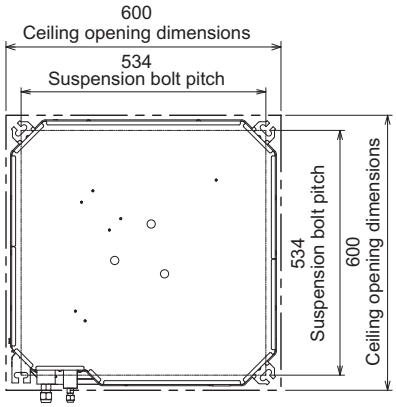

Unit: mm

Fig. 2-54

(3) Determine the pitch of the suspension bolts using the supplied full-scale installation diagram.
The diagram shows the relationship between the positions of the suspension fitting, the unit, and the panel.

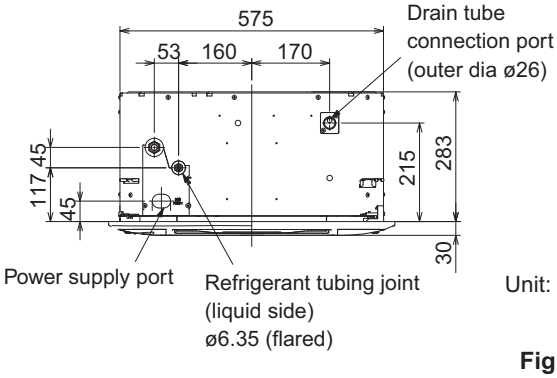

Unit: mm

Fig. 2-55

4-13-15. Placing the Unit Inside the Ceiling

(1) When placing the unit inside the ceiling, determine the pitch of the suspension bolts using the supplied full-scale installation diagram. (Fig. 2-56)
Tubing and wiring must be laid inside the ceiling when suspending the unit. If the ceiling is already constructed, lay the tubing and wiring into position for connection to the unit before placing the unit inside the ceiling.

(2) The length of suspension bolts must be appropriate for a distance between the bottom of the bolt and the bottom of the unit of more than 15 mm. (Fig. 2-56)

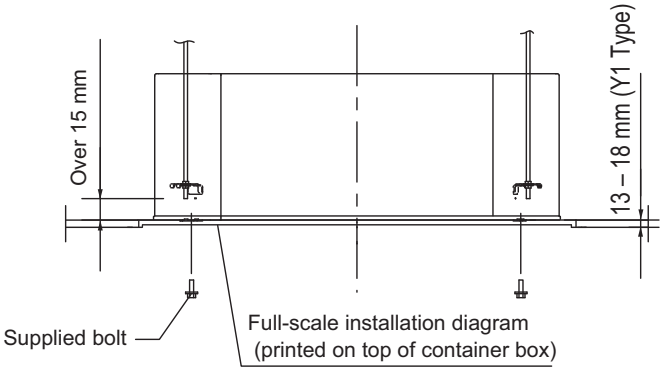

Fig. 2-56

4. Installation Instructions

(3) Thread the 3 hexagonal nuts and 2 washers (field supply) onto each of the 4 suspension bolts (Fig. 2-57).
Use 1 nut and 1 washer for the upper side, and 2 nuts and 1 washer for the lower side, so that the unit will not fall off the suspension lugs.

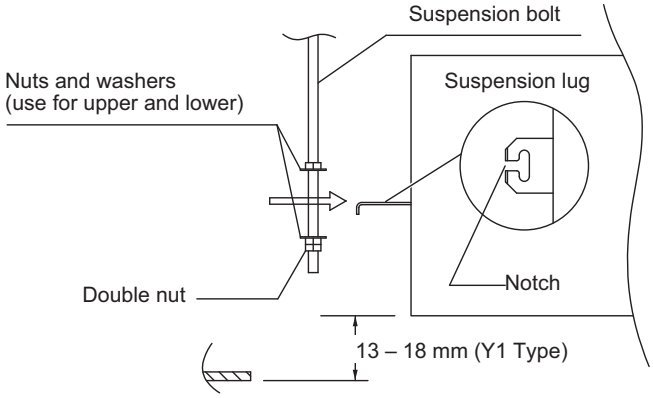

Fig. 2-57

(4) Adjust so that the distance between the unit and the ceiling bottom is 13 to 18 mm. Tighten the nuts on the upper side and lower side of the suspension lug.

(5) Remove the protective polyethylene used to protect the fan parts during transport.

2

4-13-16. Installing the Drain Pipe

(1) Prepare a standard hard PVC pipe (O.D. 26 mm) for the drain and use the supplied drain hose and hose band to prevent water leaks. The PVC pipe must be purchased separately. The unit's transparent drain port allows you to check drainage.

(2) Installing the drain hose

- **To install the drain hose, first place 1 of the 2 hose bands over the unit drain port and the other hose band over the hard PVC pipe (not supplied). Then connect both ends of the supplied drain hose. (Fig. 2-58)**

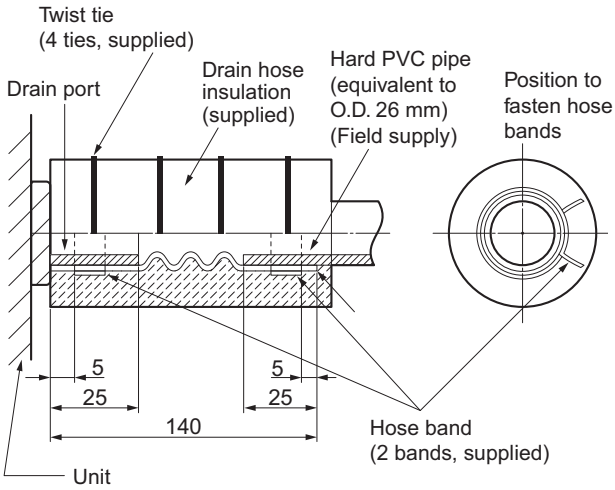

Unit: mm

Fig. 2-58

- **On the unit drain side, grasp the hose band with pliers and insert the drain hose all the way to the base.**
- **If other commercially available hose bands are used, the drain hose may become pinched or wrinkled and there is danger of water leakage. Therefore be sure to use the supplied hose bands. When sliding the hose bands, be careful to avoid scratching the drain hose.**
- **Do not use adhesive when connecting the supplied drain hose to the drain port (either on the main unit or the PVC pipe).**

Reasons: 1. It may cause water to leak from the connection.
Since the connection is slippery just after the adhesive has been applied, the pipe easily slips off.
2. The pipe cannot be removed when maintenance is needed.

4. Installation Instructions

- **Wrap the hose with the supplied drain hose insulation and use the 4 twist ties so that the hose is insulated with no gaps.**
- **Do not bend the supplied drain hose 90° or more. The hose may slip off.**

CAUTION

- **Attach so that the hose band fastener is on the side of the drain port.**
- **Attach the hose bands so that each is approximately 5 to 25 mm from the end of the supplied drain hose.**

NOTE

Make sure the drain pipe has a downward slant (1/100 or more) and that there are no water traps.

CAUTION

- **Do not install an air bleeder as this may cause water to spray from the drain pipe outlet. (Fig. 2-59)**

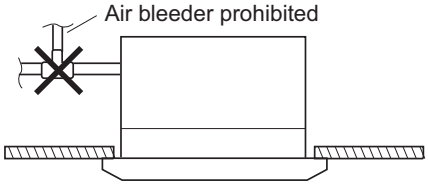

Fig. 2-59

- **In cases where it is necessary to raise the height of the drain piping, the drain piping can be raised to a maximum height of 850 mm above the bottom surface of the ceiling. Under no conditions attempt to raise it higher than 850 mm above the bottom surface of the ceiling. Doing so will result in water leakage. (Fig. 2-60)**

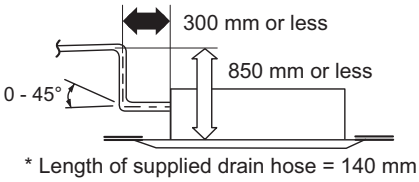

Fig. 2-60

- **Do not use natural drainage.**
- **Do not install the pipe with an upward slant from the connection port. This will cause the drain water to flow backward and leak when the unit is not operating. (Fig. 2-61)**

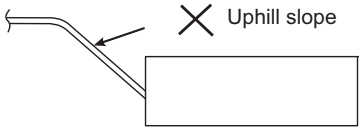

Fig. 2-61

- **Do not apply force to the piping on the unit side when connecting the drain pipe. The pipe should not be allowed to hang unsupported from its connection to the unit. Fasten the pipe to a wall, frame, or other support as close to the unit as possible. (Fig. 2-62)**
- **Provide insulation for any pipes that are run indoors.**

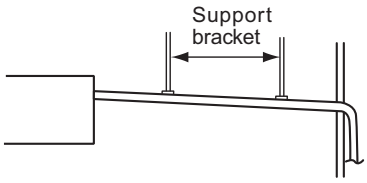

Fig. 2-62

4-13-17. Checking the Drainage

After wiring and drain piping are completed, use the following procedure to check that the water will drain smoothly. For this, prepare a bucket and wiping cloth to catch and wipe up spilled water.

(1) Connect power to the power terminal board (R, S terminals) inside the electrical component box.
(2) Slowly pour about 500 cc of water into the drain pan to check drainage. (Fig. 2-63)
(3) Short the check pin (CHK) on the indoor control board and operate the drain pump. Check the water flow through the transparent drain pipe and see if there is any leakage.
(4) When the check of drainage is complete, open the check pin (CHK) and remount the tube cover.

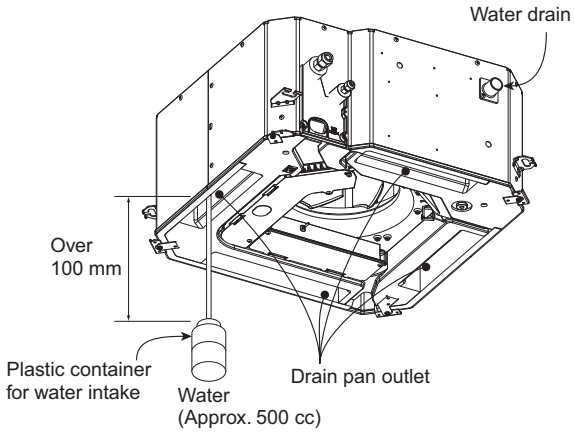

Fig. 2-63

CAUTION

Be careful since the fan will start when you short the pin on the indoor control board.

4. Installation Instructions

● 4-Way Cassette 60x60 Type (Y2 Type)

4-13-18. Preparation for Ceiling Suspension

This unit uses a drain pump. Use a carpenter's level to check that the unit is level.

4-13-19. Ceiling Opening Dimensions and Hanging Bolt Location

This air conditioner uses a drain up motor. Horizontally install the unit using a carpenter's level.
The paper model for installation expand or shrink according to temperature and humidity.
Check on dimensions before using it.

CAUTION **During the installation, care must be taken not to damage electric wires.**

- The dimensions of the paper model for installation are the same as those of the ceiling opening dimensions.
- Be sure to discuss the ceiling drilling work with the workers concerned.

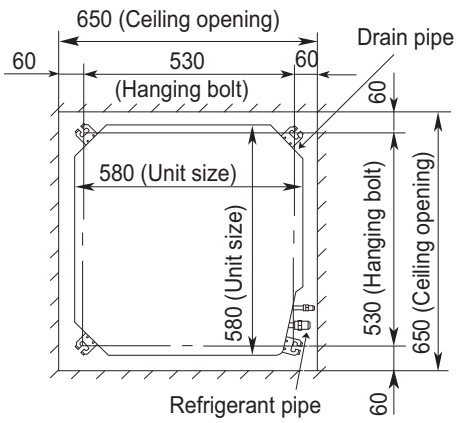

Fig. 2-64

4-13-20. Positions of Air Conditioner Body and Ceiling Surface

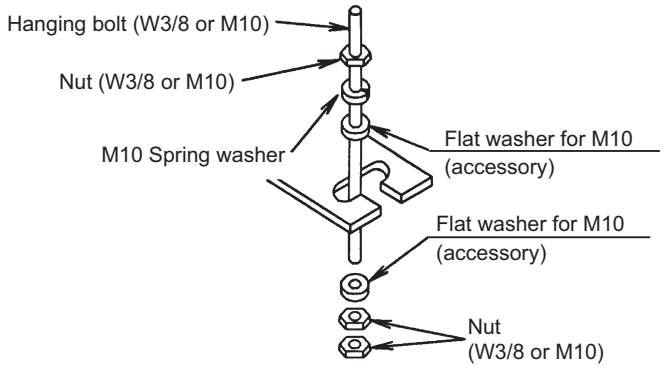

Fig. 2-65

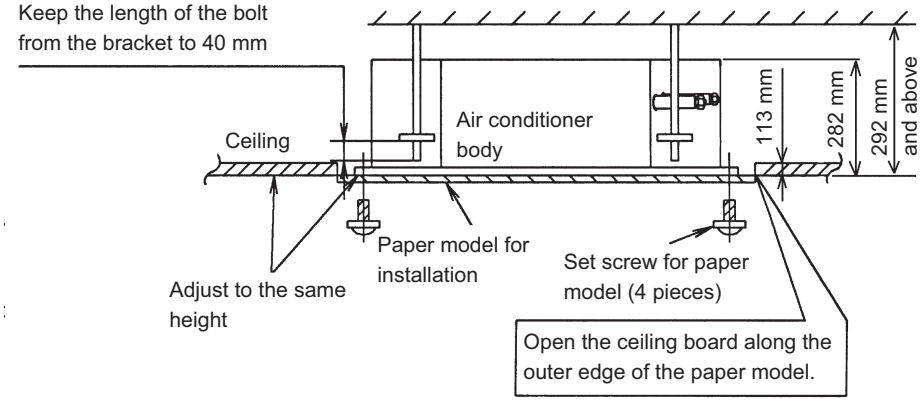

Fig. 2-66

WARNING **Tighten the nut and bolt to prevent unit from falling.**

4. Installation Instructions

4-13-21. Installing the Drain Pipe

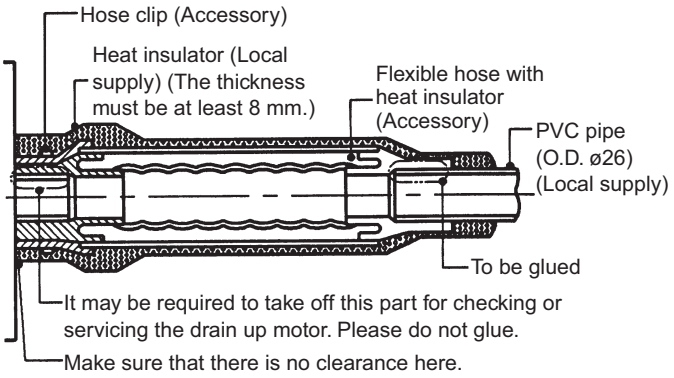

Fig. 2-67

NOTE

Make sure the drain pipe has a downward slant (1/100 or more) and that there are no water traps.

4-13-22. Indoor Unit Drain Piping

- During drain piping connection, be careful not to exert extra force on the drain port at the indoor unit.
- The outside diameter of the drain connection at the indoor unit is 32 mm.
  Piping material: Polyvinyl chloride pipe VP-25 and pipe fittings.
- Be sure to perform heat insulation on the drain piping.
  Heat insulation material: Polyethylene foam with thickness more than 8 mm (local supply).
- Drain piping must have Downward Slant (1/50 to 1/100); be sure not to provide up-and-down slope to prevent reversal flow.
- Be sure to check no air trap on drain hose and to ensure smooth water flow and no abnormal sound.

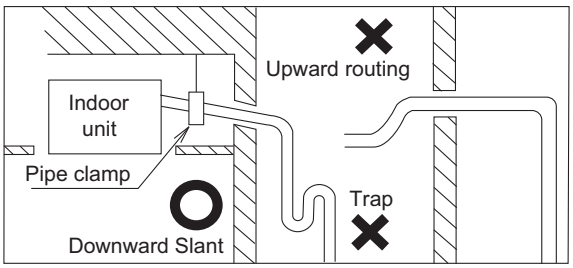

Fig. 2-68

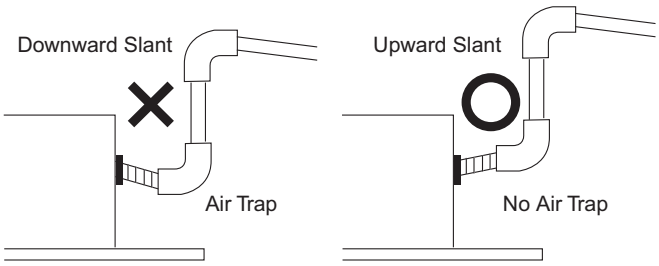

Fig. 2-69

- The height of drain may be possible up to 750 mm.

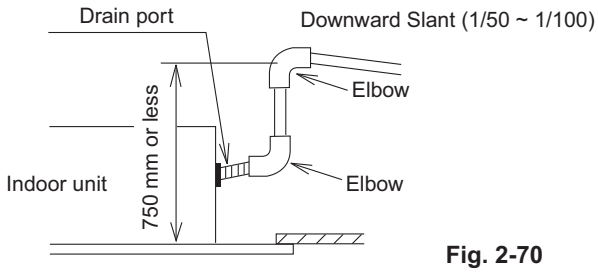

Fig. 2-70

- When drain set piping, install as shown in the figure below.

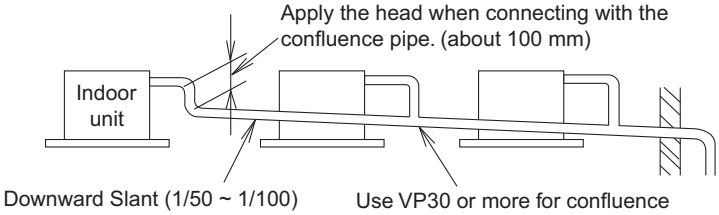

Fig. 2-71

Drain Test

The air conditioner uses a drain up motor to drain water. Use the following procedure to test the drain up motor operation.

- Connect the main drain pipe to exterior and leave it provisionally until the test comes to an end.
- Feed water to the flexible drain hose and check the piping for leakage.
- Be sure to check the drain up motor for normal operating and noise when electric wiring is complete.
- When the test is complete, connect the flexible drain hose to the drain port.

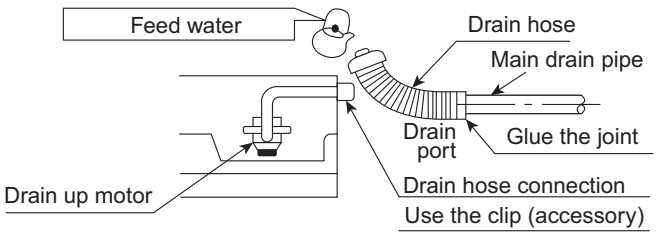

Fig. 2-72

4. Installation Instructions

● Ceiling Type (T1 Type)

4-13-23. Required Minimum Space for Installation and Service

(1) Dimensions of suspension bolt pitch and unit

Type \ Length	A	B	C
36, 45, 56	855	910	210
73	1125	1180	210
106, 140	1540	1595	210

Unit: mm

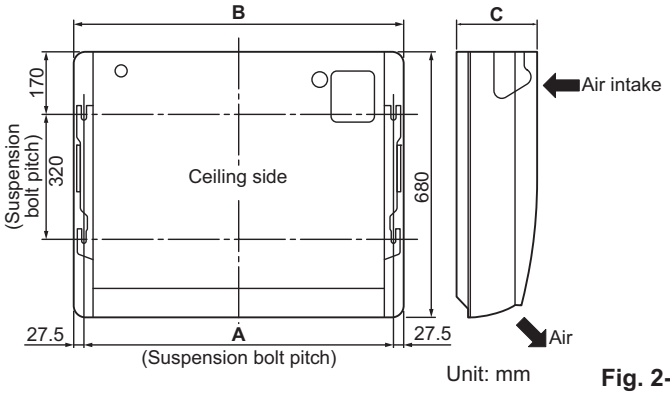

Fig. 2-73

(2) Refrigerant tubing • drain hose position

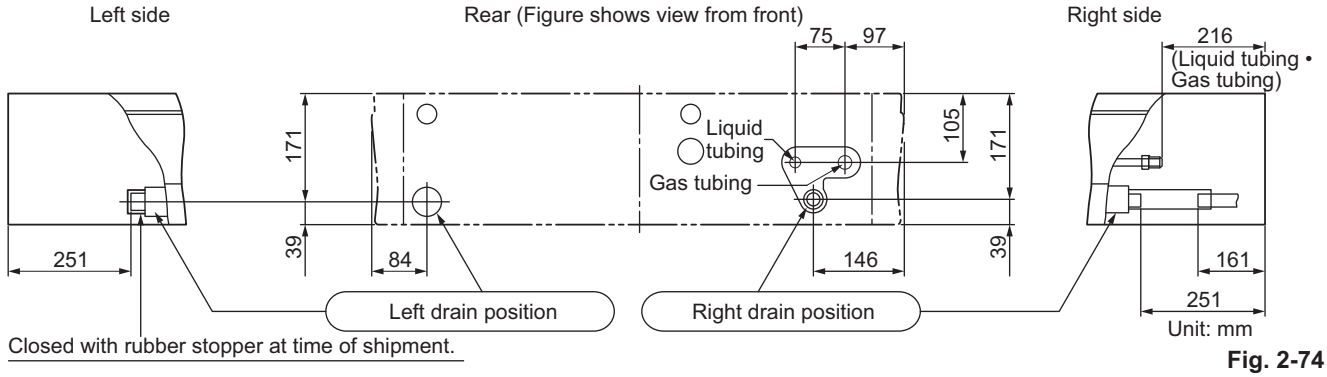

Fig. 2-74

(3) Unit opening position (Refrigerant tubing • drain hose • power inlet port • remote controller wiring inlet port)

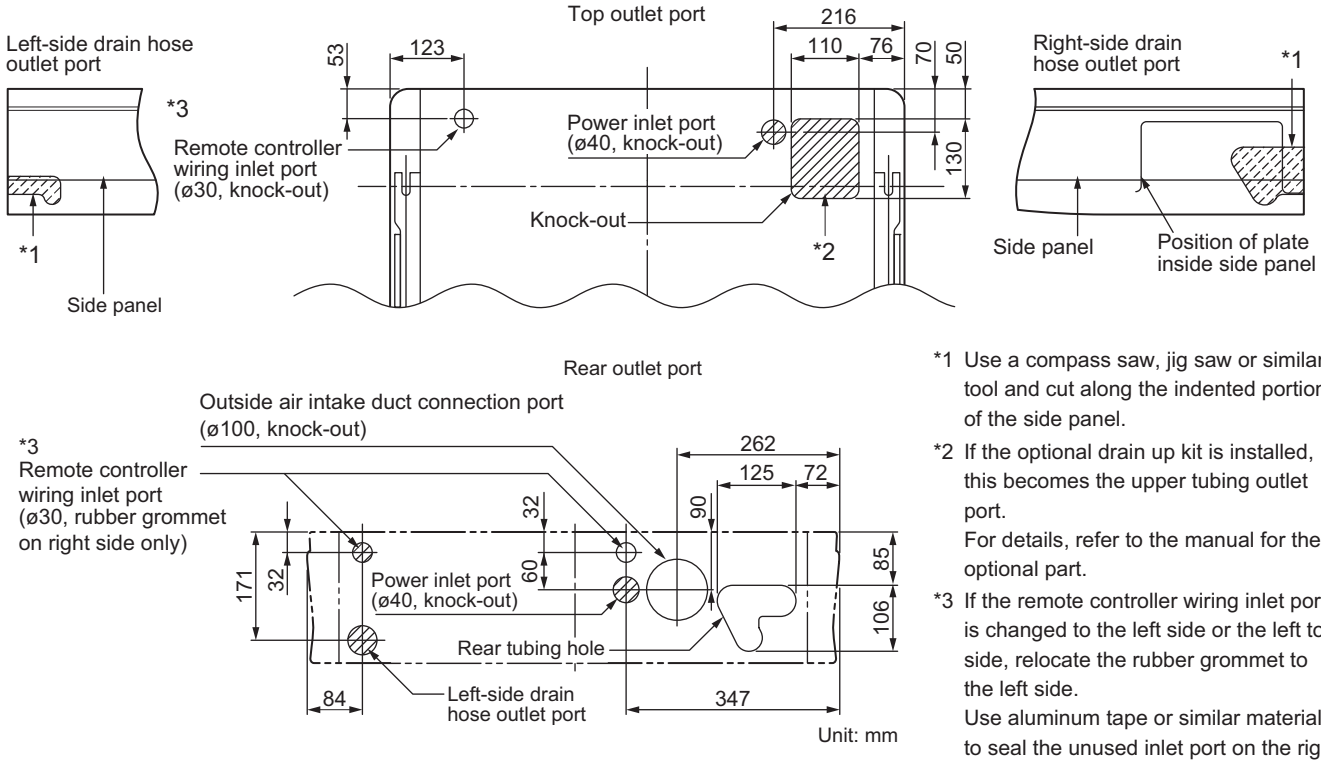

*1 Use a compass saw, jig saw or similar tool and cut along the indented portion of the side panel.

*2 If the optional drain up kit is installed, this becomes the upper tubing outlet port.
For details, refer to the manual for the optional part.

*3 If the remote controller wiring inlet port is changed to the left side or the left top side, relocate the rubber grommet to the left side.
Use aluminum tape or similar material to seal the unused inlet port on the right side.

Fig. 2-75

4. Installation Instructions

(4) Wall and ceiling side opening position

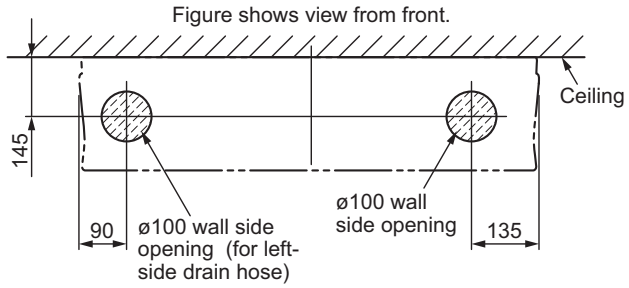

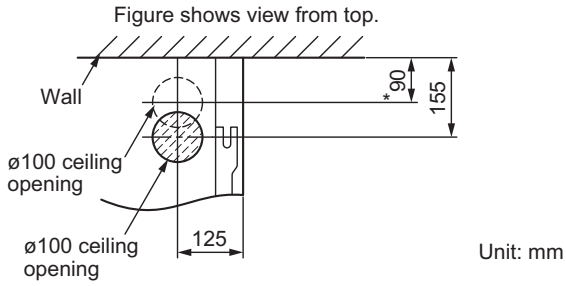

* If the optional drain up kit is installed, create a ø100 hole along the dotted line (part marked with * in figure).

Fig. 2-76

4-13-24. Suspending the Indoor Unit

(1) Place the full-scale diagram (supplied) on the ceiling at the location where you want to install the indoor unit. Use a pencil to mark the drill holes (Fig. 2-77).

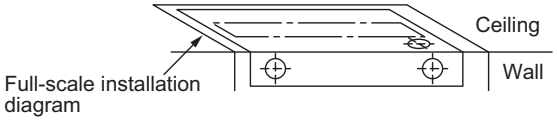

Fig. 2-77

(2) Drill holes at the 4 points indicated on the full-scale diagram.

(3) Depending on the ceiling type:

a) Insert suspension bolts (Fig. 2-78).
or

b) Use existing ceiling supports or construct a suitable support (Fig. 2-79).

⚠ WARNING

It is important that you use extreme care in supporting the indoor unit from the ceiling. Ensure that the ceiling is strong enough to support the weight of the unit. Before hanging the ceiling unit, test the strength of each attached suspension bolt.

(4) Screw in the suspension bolts, allowing them to protrude from the ceiling (Figs. 2-78 and 2-79). The distance of each exposed bolt must be of equal length within 50 mm. (Fig. 2-80)

(5) Before suspending the indoor unit, remove the 2 or 3 screws on the latch of the air-intake grilles, open the grilles, and remove them by pushing the claws of the hinges (Fig. 2-81). Then remove both side panels sliding them along the unit toward the front after removing the 2 attachment screws. (Fig. 2-82)

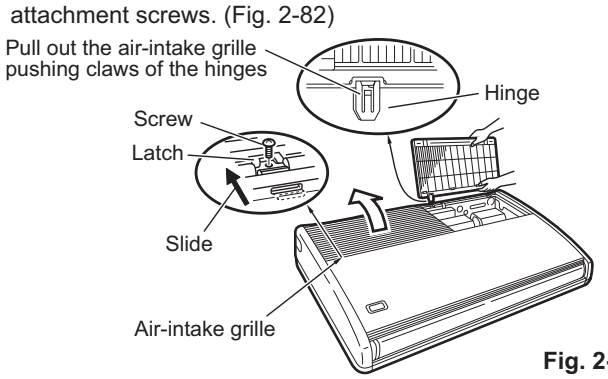

Fig. 2-81

NOTE

Since the diagram is made of paper, it may shrink or stretch slightly because of high temperature or humidity.
For this reason, before drilling the holes maintain the correct dimensions between the markings.

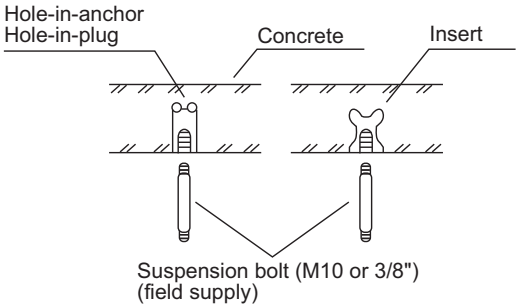

Fig. 2-78

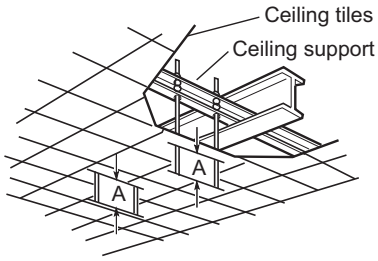

Fig. 2-79

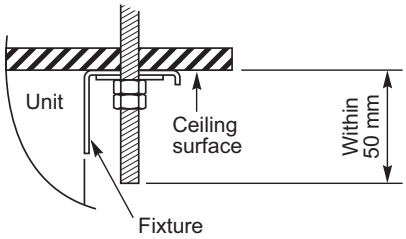

Fig. 2-80

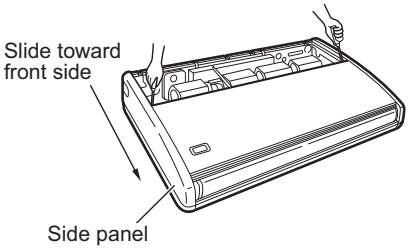

Fig. 2-82

4. Installation Instructions

(6) Carry out the preparation for suspending the indoor unit. The suspension method varies depending on whether there is a suspended ceiling or not. (Figs. 2-83 and 2-84)

(7) Suspend the indoor unit as follows:

a) Mount 1 washer and 2 hexagonal nuts on each suspension bolt (Fig. 2-85).

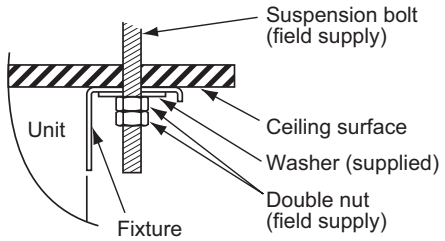

Fig. 2-83

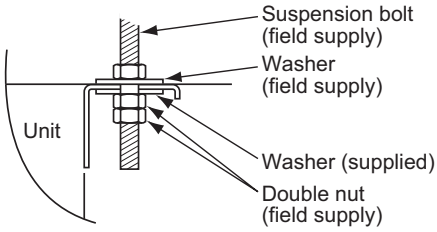

Fig. 2-84

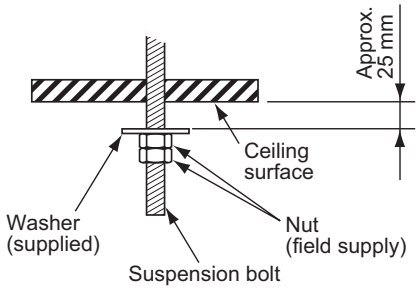

Fig. 2-85

b) Lift the indoor unit, and place it on the washers through the notches, in order to fix it in place. (Fig. 2-86)

c) Tighten the 2 hexagonal nuts on each suspension bolt to suspend the indoor unit as shown in Fig. 2-87.

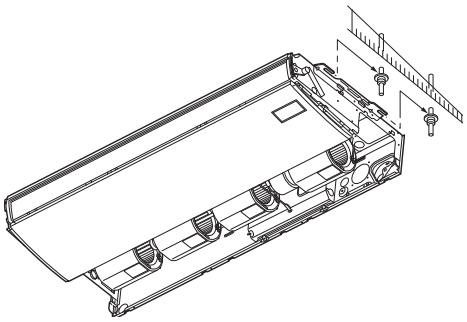

Fig. 2-86

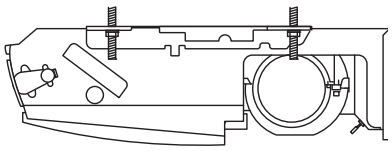

Fig. 2-87

NOTE

The ceiling surface is not always level. Confirm that the indoor unit is evenly suspended.
For the installation to be correct, leave a clearance of about 10 mm between the ceiling panel and the ceiling surface and fill the gap with an appropriate insulation or filler material.

(8) If the tubing and wiring are to go towards the rear of the unit, make holes in the wall. (Fig. 2-88)

(9) Measure the thickness of the wall from the inside to the outside and cut PVC pipe at a slight angle to fit. Insert the PVC pipe in the wall. (Fig. 2-89)

NOTE

The hole should be made at a slight downward slant to the outside.

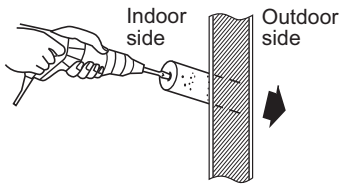

Fig. 2-88

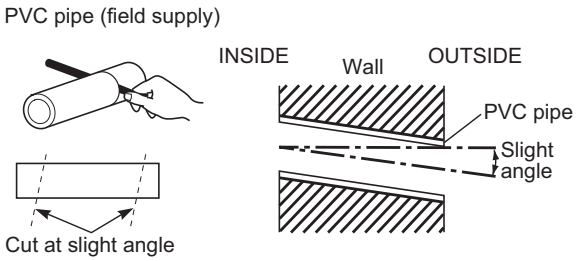

Fig. 2-89

4. Installation Instructions

4-13-25. Duct for Fresh Air

There is a duct connection port (knock-out hole) at the right-rear of the top panel of the indoor unit for drawing in fresh air. If it is necessary to draw in fresh air, remove the cover by opening the hole and connecting the duct to the indoor unit through the connection port. (Fig. 2-90)

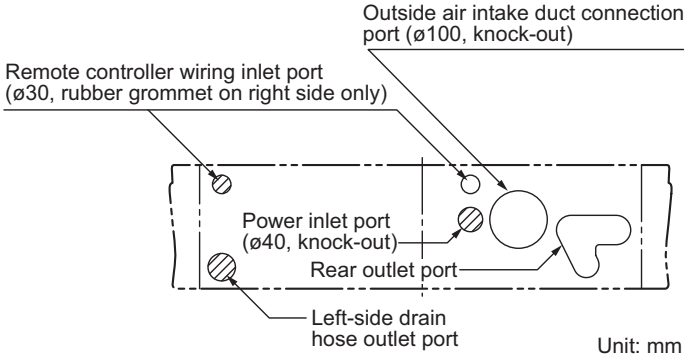

Fig. 2-90

4-13-26. Shaping the Tubing

- The positions of the refrigerant tubing connections are shown in the figure below. (The tubing can be routed in 3 directions.) (Fig. 2-91)

* When routing the tubing out through the top or right sides, knock out the appropriate parts in the top panel and cut notches in the side panel (Fig. 2-90).

* When routing the tubing out through the top, the optional L-shape tubing kit is required.

If the tubing is to be routed out together, use a box cutter or similar tool to cut out the part of the rear cover indicated by the marked area (Fig. 2-92), to match the positions of the tubes. Then draw out the tubing.

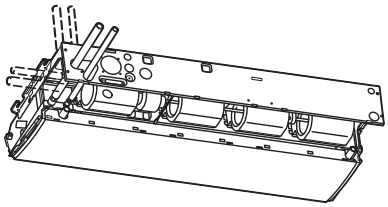

Fig. 2-91

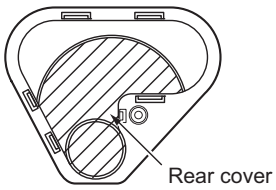

Fig. 2-92

4-13-27. Installing the Drain Pipe

- Prepare standard PVC pipe for the drain and connect it to the indoor unit drain pipe with the supplied hose clamps to prevent water leaks.

(1) Drain hose connection

- The drain hose is connected below the refrigerant tubing.

(2) Installing the drain hose

- To install the drain hose, first place 1 of the 2 hose bands over the unit drain port and the other hose band over the hard PVC pipe (not supplied). Then connect both ends of the supplied drain hose.
- On the unit drain side, grasp the hose band with pliers and insert the drain hose all the way to the base.

⚠ **CAUTION**

- **Attach so that the hose band fastener is on the side of the drain port. (Fig. 2-94)**
- **Attach the hose bands so that each is approximately 5 to 25 mm from the end of the supplied drain hose.**
- If other commercially available hose bands are used, the drain hose may become pinched or wrinkled and there is danger of water leakage. Therefore be sure to use the supplied hose bands. When sliding the hose bands, be careful to avoid scratching the drain hose.
- Do not use adhesive tape when connecting the supplied drain hose to the drain port (either on the main unit or the PVC pipe).
- Wrap the hose with the supplied drain hose insulation and use the 4 twist ties so that the hose is insulated with no gaps.
- Connect the drain pipe so that it slopes downward from the unit to the outside. (Fig. 2-93)

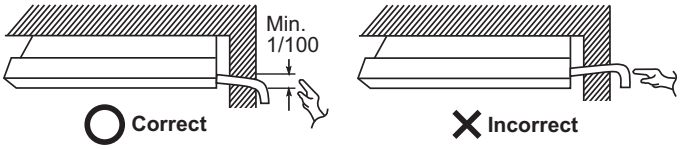

Fig. 2-93

4. Installation Instructions

- Never allow water traps to occur in the course of the piping.
- Insulate any piping inside the room to prevent dripping.
- After the drain piping, pour water into the drain pan to check that the water drains smoothly.
- If the drain hose is to be raised, use the optional drain up kit. The drain hose can be raised 60 cm above the top of the main unit. (For details, refer to the manual for the optional part.)

* If the drain hose is routed through the left side, refer to Fig. 2-91, and follow the procedure above to install the hose. Reattach the rubber stopper removed earlier onto the right side.
The rubber stopper can be inserted easily by using a screwdriver or similar tool to press the stopper into the drain port on the main unit. Press the stopper into the main unit drain port as far as it will go.

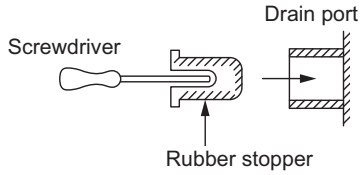

CAUTION

Check local electrical codes and regulations before wiring. Also, check any specified instruction or limitations.

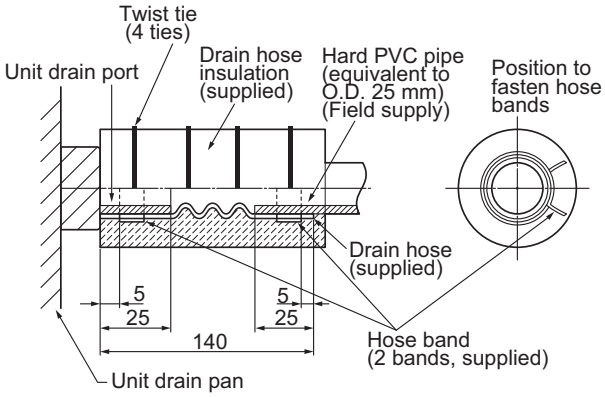

Unit: mm

Fig. 2-94

How to carry out power supply wiring

(1) Wiring connection ports

The power inlet ports are located at the rear and top.
The remote controller wiring inlet ports are located at the rear and top (for use with the wired remote controller).
For details, refer to Fig. 2-90. For the method used to insert the wiring, refer to Fig. 2-95.

Attach the supplied eyelet to the power wiring inlet port with adhesive material (field supply).
(Refer to Fig. 2-95)

CAUTION

When removing the fastening bracket from the cover of the electrical component box, use caution to avoid dropping the bracket.

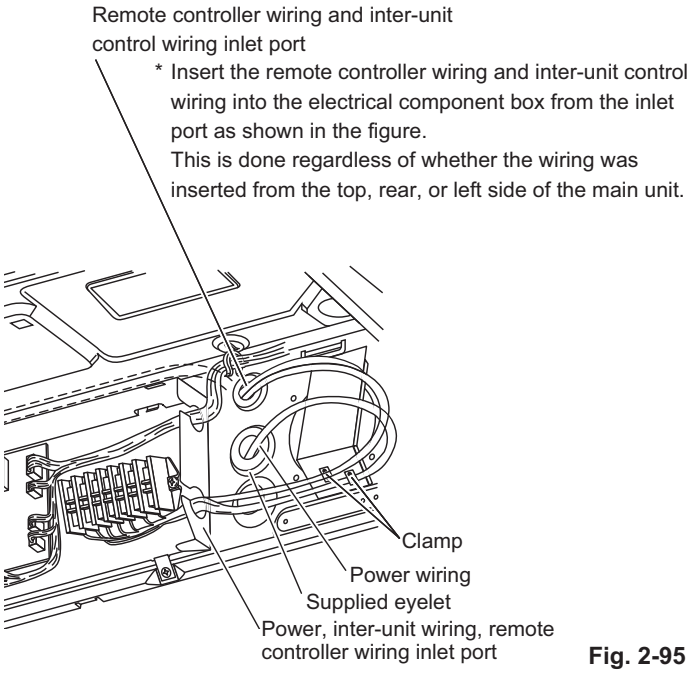

Fig. 2-95

(2) How to carry out wiring

- Open the knock-out hole on the rear or top of the main unit.
  Attach the supplied rubber grommet and pull the power wiring into the main unit.
- Feed the wiring into the wiring inlet port on the electrical component box.
  Connect the wiring to the terminal plate and fasten in place with the supplied clamp.
- Perform electrical and grounding work in accordance with the package A/C power specifications, and following local electrical codes and regulations.

4. Installation Instructions

● **Low Silhouette Ducted Type (F1 Type)**

4-13-28. Required Minimum Space for Installation and Service

● This air conditioner is usually installed above the ceiling so that the indoor unit and ducts are not visible. Only the air intake and air outlet ports are visible from the unit bottom.

● The minimum space for installation and service is shown in Fig. 2-96 and Table 2-15.

Table 2-15 Unit: mm

Type	22, 28, 36, 45, 56	73, 90	106, 140, 160
A (Length)	780	1,080	1,560

● It is recommended that space be provided (450 × 450 mm) for checking and servicing the electrical system.

● The detailed dimensions of the indoor unit are shown in Fig. 2-97 and Table 2-16.

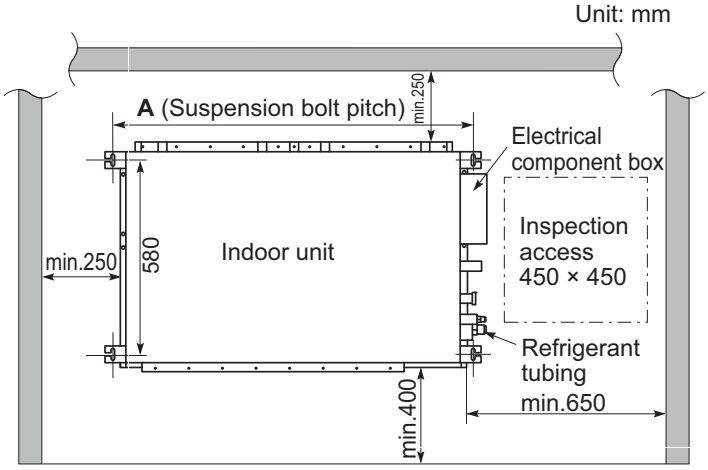

Fig. 2-96

Table 2-16 Unit: mm

Dimension / Type	A	B	C	D	No. of holes E	No. of holes F	G	H	I	G	K
22, 28, 36, 45, 56	646	500 (100 × 5)	700	780	18	12	73	96	300 (100 × 3)	492	161
73, 90	946	900 (100 × 9)	1,000	1,080	26	20	23	41	700 (100 × 7)	782	171
106, 140, 160	1,426	1,300 (100 × 13)	1,480	1,560	26	28	63	81	1,100 (100 × 11)	1,262	182

Power, inter-unit wiring

① Refrigerant tubing joint (liquid tube)
② Refrigerant tubing joint (gas tube)
③ Upper drain port VP25 (O.D. 32 mm) ℓ200 flexible hose supplied
④ Bottom drain port VP25 (O.D. 32 mm)
⑤ Suspension lug (4 – 12 × 37 mm)
⑥ Power supply outlet (2 – ø30 mm)
⑦ Fresh air intake port (ø150 mm)
⑧ Flange for flexible air outlet duct
⑨ Tube cover
⑩ Electrical component box
⑪ Wind pressure endurance
⑫ Flange for air intake duct
⑬ Filter

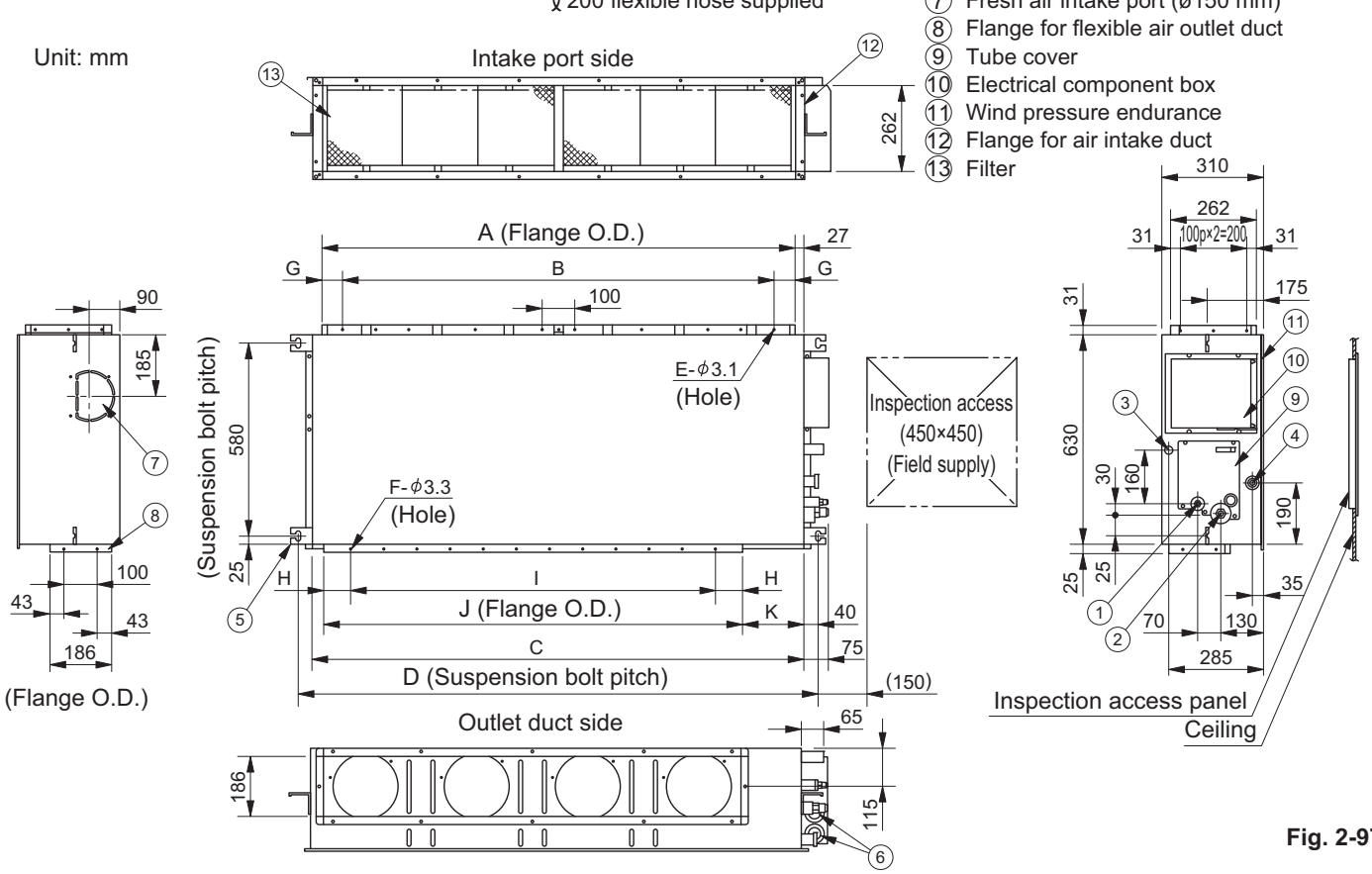

Fig. 2-97

4. Installation Instructions

4-13-29. Suspending the Indoor Unit

Depending on the ceiling type:

- Insert suspension bolts (Fig. 2-98)
  or
- Use existing ceiling supports or construct a suitable support (Fig. 2-99).

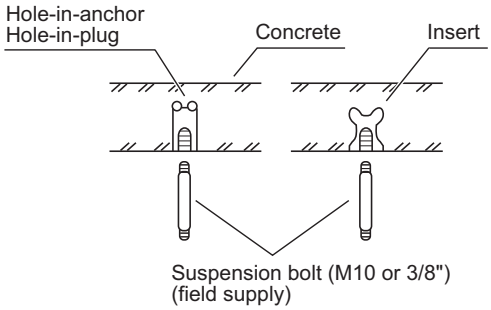

Fig. 2-98

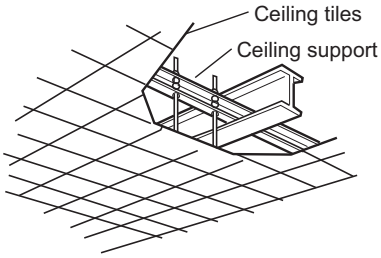

Fig. 2-99

⚠ WARNING

It is important that you use extreme care in supporting the indoor unit inside the ceiling.
Ensure that the ceiling is strong enough to support the weight of the unit. Before hanging the unit, test the strength of each attached suspension bolt.

(1) When placing the unit inside the ceiling, determine the pitch of the suspension bolts referring to the dimensional data as shown in Fig. 2-96 and Table 2-16. Tubing must be laid and connected inside the ceiling when suspending the unit. If the ceiling is already constructed, lay the tubing into position for connection to the unit before placing the unit inside the ceiling.

(2) Screw in the suspension bolts allowing them to protrude from the ceiling (Fig. 2-98).
(Cut the ceiling material, if necessary.)

(3) Thread the 3 hexagonal nuts and 2 washers (field supply) onto each of the 4 suspension bolts (Figs. 2-100 and 2-101). Use 1 nut and 1 washer for the upper part, and 2 nuts and 1 washer for the lower part, so that the unit will not fall off the suspension lugs.

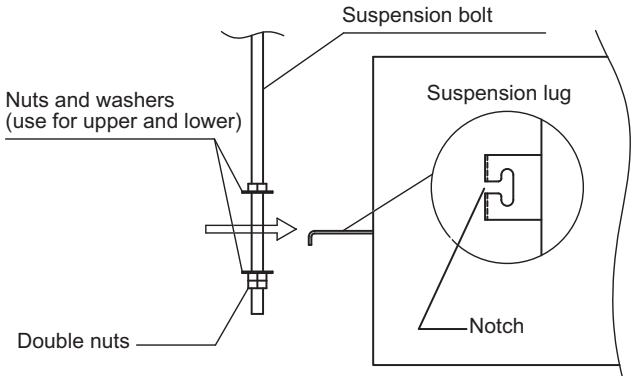

Fig. 2-100

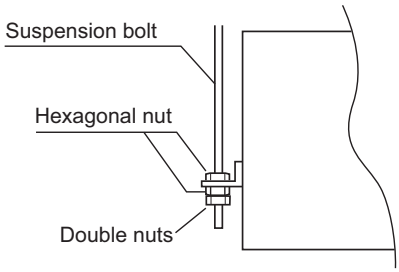

Fig. 2-101

● This shows an example of installation.

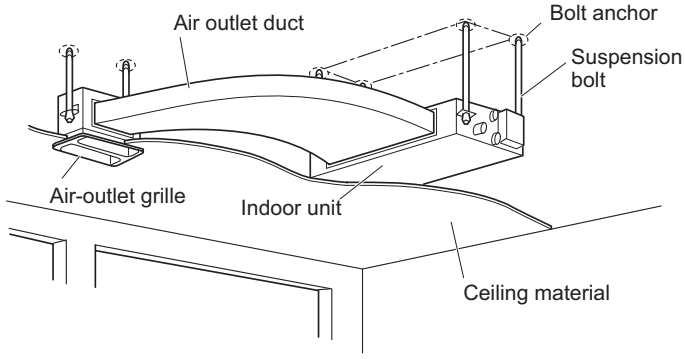

Fig. 2-102

4. Installation Instructions

4-13-30. Installing the Drain Pipe

(1) Prepare standard hard PVC pipe (O.D. 32 mm) for the drain and use the supplied hose band to prevent water leaks.
The PVC pipe must be purchased separately.
The transparent drain part on the unit allows you to check drainage. (Fig. 2-103)

⚠ CAUTION

- **Do not use adhesive tape at the drain connection port on the indoor unit.**
- **Insert the drain pipe until it contacts the socket, and then secure it tightly with the hose band.**
- **Do not use the supplied drain hose bent at a 90° angle. (The maximum permissible bend is 45°.)**
- **Tighten the hose clamps so their locking nuts face upward. (Fig. 2-103)**

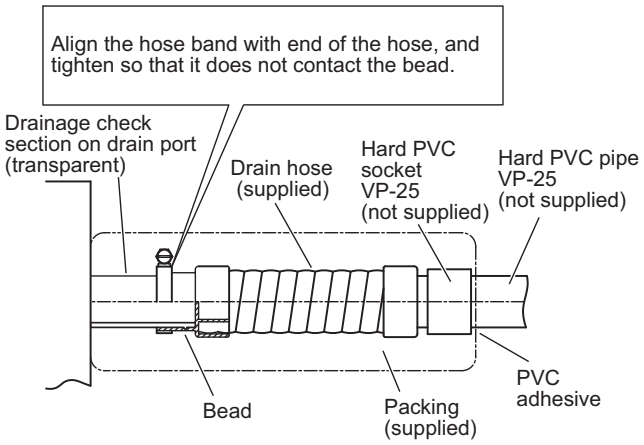

Fig. 2-103

(2) After connecting the drain pipe securely, wrap the supplied packing and drain pipe insulator around the pipe, then secure it with the vinyl clamps . (Fig. 2-104)

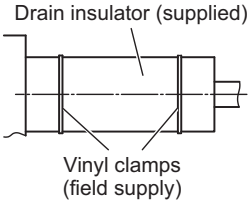

Fig. 2-104

NOTE

Make sure the drain pipe has a downward slant (1/100 or more) and that there are no water traps.

⚠ CAUTION

- **Do not install an air bleeder as this may cause water to spray from the drain pipe outlet. (Fig. 2-105)**

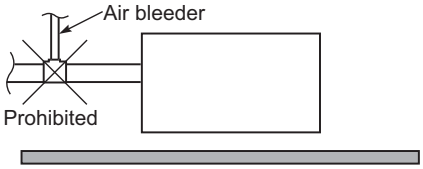

Fig. 2-105

- **If it is necessary to increase the height of the drain pipe, the section directly after the connection port can be raised a maximum of 500 mm. Do not raise it any higher than 500 mm, as this could result in water leaks. (Fig. 2-106)**

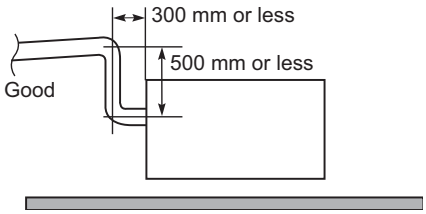

Fig. 2-106

- Do not install the pipe with an upward slant from the connection port. This will cause the drain water to flow backward and leak when the unit is not operating. (Fig. 2-107)

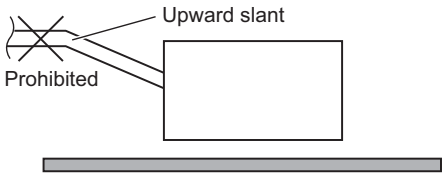

Fig. 2-107

- Do not apply force to the piping on the unit side when connecting the drain pipe. The pipe should not be allowed to hang unsupported from its connection to the unit. Fasten the pipe to a wall, frame, or other support as close to the unit as possible. (Fig. 2-108)

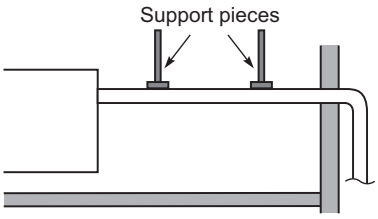

Fig. 2-108

4. Installation Instructions

4-13-31. Checking the Drainage

After wiring and drain piping are completed, use the following procedure to check that the water will drain smoothly. For this, prepare a bucket and wiping cloth to catch and wipe up spilled water.

(1) Connect power to the power terminal board (R, S terminals) inside the electrical component box.

(2) Remove the tube cover and slowly pour about 1,200 cc of water through the opening into the drain pan to check drainage.

(3) Short-circuit the check pin (CHK) on the indoor control circuit board and operate the drain pump.
Check the water flow through the transparent drain port and see if there is any leakage.

⚠ CAUTION

Be careful since the fan will start when you short the pin on the indoor control board.

(4) When the drainage check is complete, open the check pin (CHK) and remount the insulator and drain cap onto the drain inspection port.

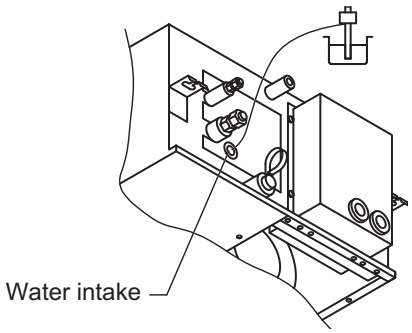

Fig. 2-109

4-13-32. Installing the Air-intake Filter

(1) Standard installation
Install the filter onto the intake port. (Fig. 2-110)

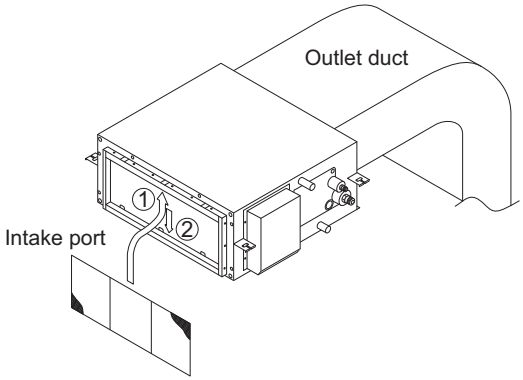

Fig. 2-110

(2) If a duct is connected to the intake port:
First remove the bottom cover, then install the filter inside the unit. (Fig. 2-111)

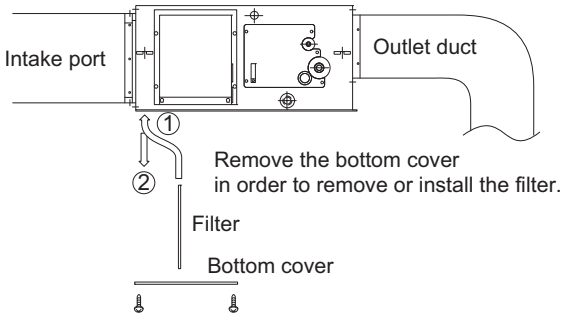

Fig. 2-111

(3) If the intake is on the bottom:
Remove the intake port chamber from the side, then reattach the chamber onto the bottom of the unit. (Fig. 2-112)

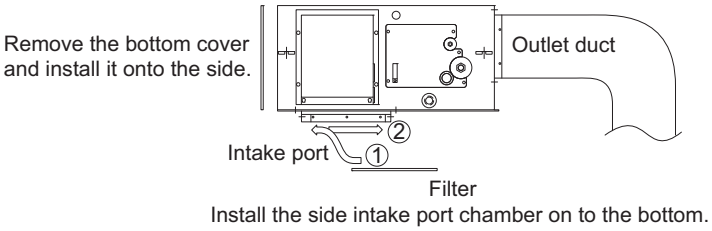

Fig. 2-112

4. Installation Instructions

4-13-33. Increasing the Fan Speed

If external static pressure is too great (due to long extension of ducts, for example), the air flow volume may drop too low at each air outlet. This problem may be solved by increasing the fan speed using the following procedure:

(1) Remove 4 screws on the electrical component box and remove the cover plate.

(2) Disconnect the fan motor sockets in the box.

(3) Take out the booster cable (sockets at both ends) clamped in the box.

(4) Securely connect the booster cable sockets between the disconnected fan motor sockets in step 2 (Fig. 2-114).

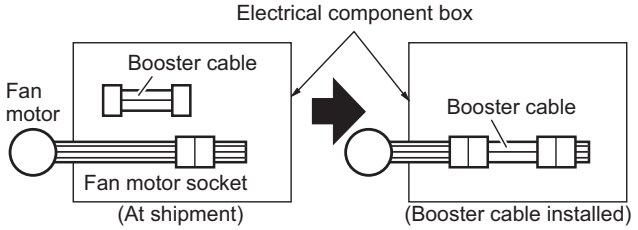

Fig. 2-113

(5) Place the cable neatly in the box and reinstall the cover plate.

Indoor Fan Performance

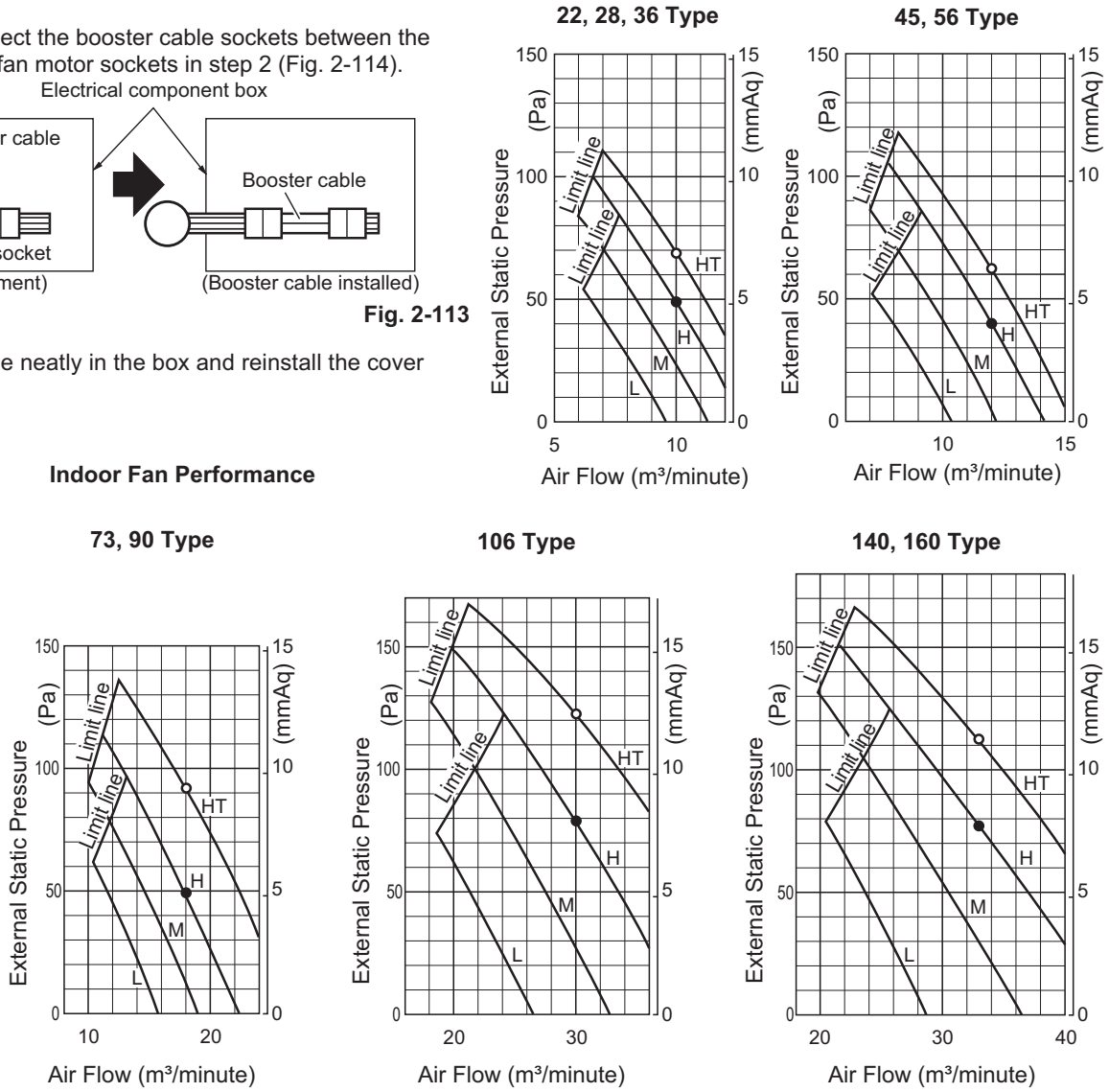

NOTE HT: Using the booster cable

H: At shipment

Fig. 2-114

■ **How to read the diagram**

The vertical axis is the external static pressure (Pa) while the horizontal axis represents the air flow (m^3/minute). The characteristic curves for “HT”, “H”, “M” and “L” fan speed control are shown. The nameplate values are shown based on the “H” air flow. For the 73 type, the air flow is 18 m^3/minute, while the external static pressure is 49 Pa at “H” position. If external static pressure is too great (due to long extension of ducts, for example), the air flow volume may drop too low at each air outlet. This problem may be solved by increasing the fan speed as explained above.

4. Installation Instructions

- **Low Silhouette Ducted Type (F2 Type)**

4-13-34. Required Minimum Space for Installation and Service

- This air conditioner is usually installed above the ceiling so that the indoor unit and ducts are not visible. Only the air intake and air outlet ports are visible from the unit bottom.
- The minimum space for installation and service is shown in Fig. 2-115 and Table 2-17.

Table 2-17 Unit: mm

Type	22, 28, 36, 45, 56	60, 73, 90	106, 140, 160
A (Length)	867	1,067	1,467

- It is recommended that space be provided (450 × 450 mm) for checking and servicing the electrical system.
- The detailed dimensions of the indoor unit are shown in Fig. 2-116 and Table 2-18.

Unit: mm

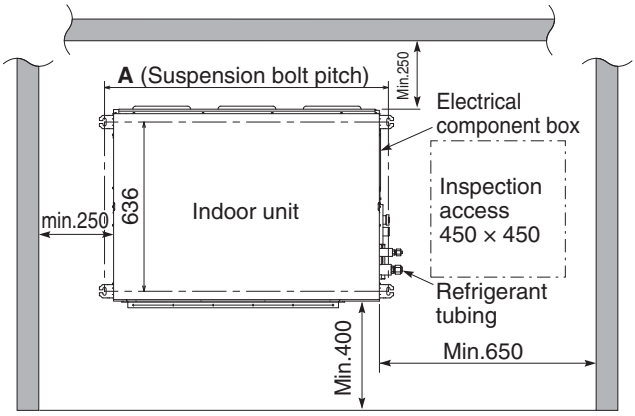

Fig. 2-115

Table 2-18 Unit: mm

Type	A	B	C	D	E	F
22, 28, 36, 45, 56	867	800	450 (Pitch 150 × 3)	71	592	12
60, 73, 90	1,067	1,000	750 (Pitch 150 × 5)	21	792	16
106, 140, 160	1,467	1,400	1,050 (Pitch 150 × 7)	71	1,192	20

2

a) Refrigerant tubing joint (liquid tube)
b) Refrigerant tubing joint (gas tube)
c) Upper drain port VP25 (O.D. 32 mm) ℓ200 flexible hose supplied
d) Bottom drain port VP25 (O.D. 32 mm)
e) Suspension lug (4 – 12 × 30 mm)
f) Power supply outlet
g) Fresh air intake port (ø150 mm)
h) Flange for flexible air outlet duct
i) Electrical component box
j) Filter

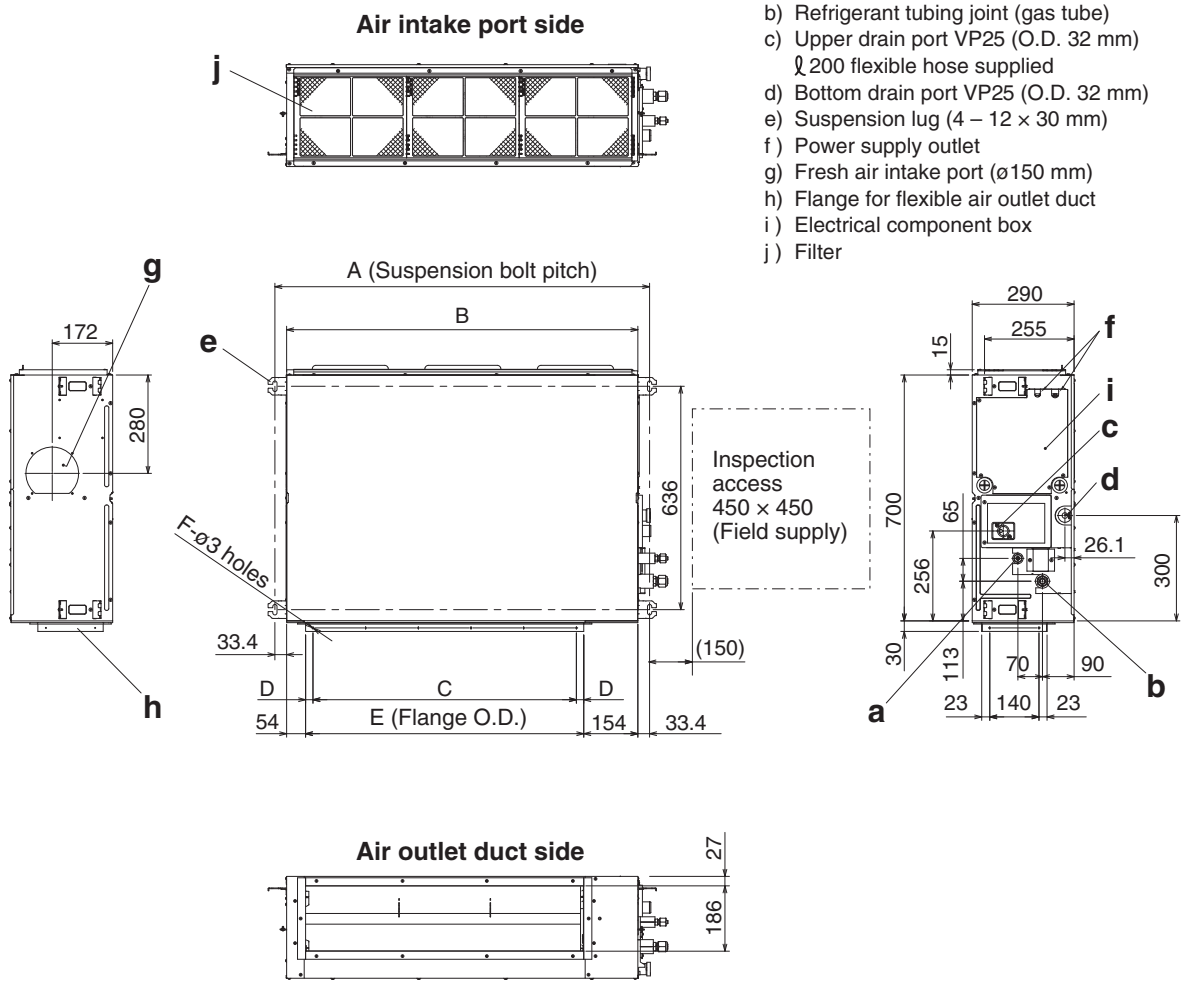

Unit: mm

Fig. 2-116

4. Installation Instructions

4-13-35. Suspending the Indoor Unit

Depending on the ceiling type:

- Insert suspension bolts (Fig. 2-117)
  or
- Use existing ceiling supports or construct a suitable support (Fig. 2-118).

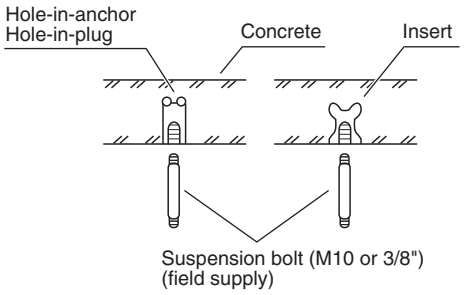

Fig. 2-117

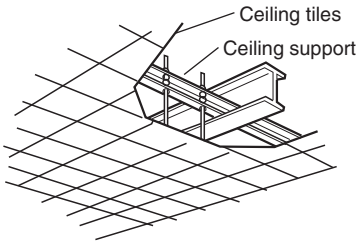

Fig. 2-118

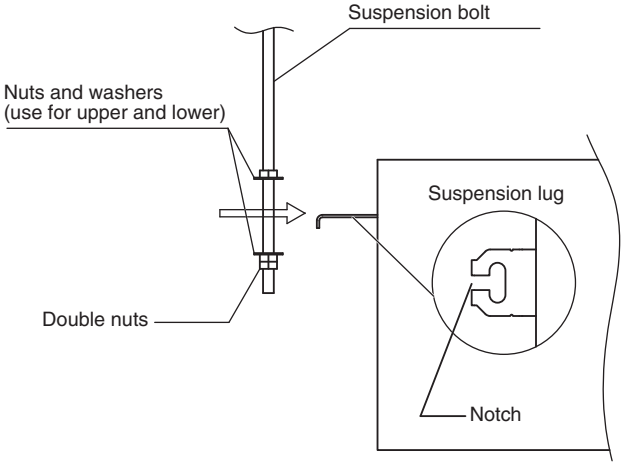

Fig. 2-119

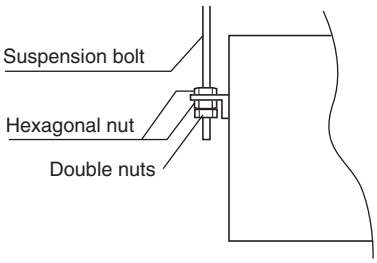

Fig. 2-120

⚠ WARNING

It is important that you use extreme care in supporting the indoor unit inside the ceiling. Ensure that the ceiling is strong enough to support the weight of the unit. Before hanging the unit, test the strength of each attached suspension bolt.

(1) When placing the unit inside the ceiling, determine the pitch of the suspension bolts referring to the dimensional data as shown in Fig. 2-115 and Table 2-18.
Tubing must be laid and connected inside the ceiling when suspending the unit. If the ceiling is already constructed, lay the tubing into position for connection to the unit before placing the unit inside the ceiling.

(2) Screw in the suspension bolts allowing them to protrude from the ceiling (Fig. 2-117). (Cut the ceiling material, if necessary.)

(3) Thread the 3 hexagonal nuts and 2 washers (field supply) onto each of the 4 suspension bolts (Figs. 2-119 and 2-120). Use 1 nut and 1 washer for the upper part, and 2 nuts and 1 washer for the lower part, so that the unit will not fall off the suspension lugs.

● This shows an example of installation.

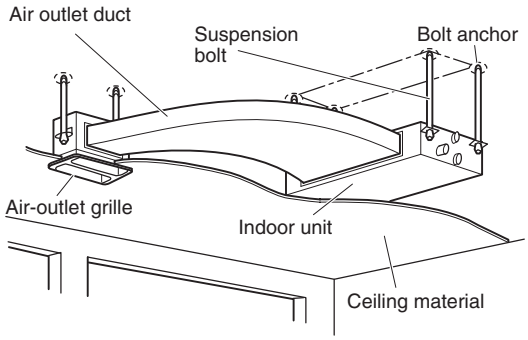

Fig. 2-121

4. Installation Instructions

4-13-36. Installing the Drain Pipe

(1) Prepare standard hard PVC pipe (O.D. 32 mm) for the drain and use the supplied hose band to prevent water leaks.
The PVC pipe must be purchased separately.
The transparent drain part on the unit allows you to check drainage. (Fig. 2-122)

⚠ CAUTION

- **Do not use adhesive tape at the drain connection port on the indoor unit.**
- **Insert the drain pipe until it contacts the socket, and then secure it tightly with the hose band.**
- **Do not use the supplied drain hose bent at a 90° angle. (The maximum permissible bend is 45°.)**
- **Tighten the hose clamps so their locking nuts face upward. (Fig. 2-122)**

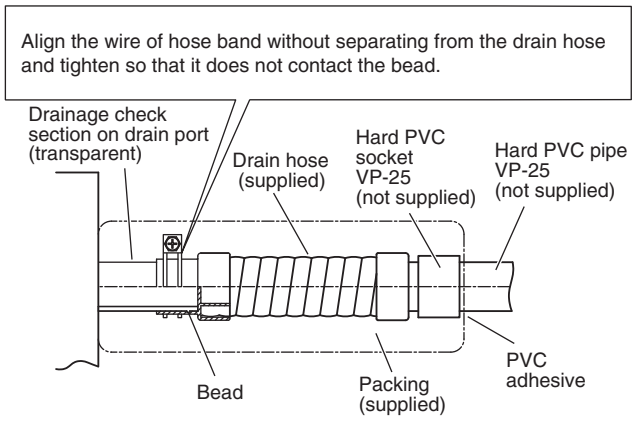

Fig. 2-122

(2) After connecting the drain pipe securely, wrap the supplied packing and drain pipe insulator around the pipe, then secure it with the vinyl clamps . (Fig. 2-123)

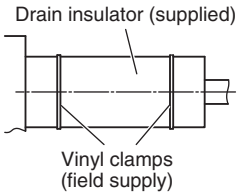

Fig. 2-123

NOTE

Make sure the drain pipe has a downward slant (1/100 or more) and that there are no water traps.

⚠ CAUTION

- **Do not install an air bleeder as this may cause water to spray from the drain pipe outlet. (Fig. 2-124)**

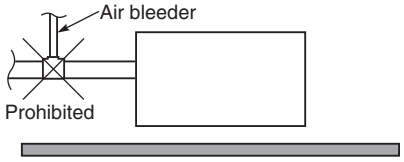

Fig. 2-124

- **If it is necessary to increase the height of the drain pipe, the section directly after the connection port can be raised a maximum of 500 mm. Do not raise it any higher than 500 mm, as this could result in water leaks. (Fig. 2-125)**

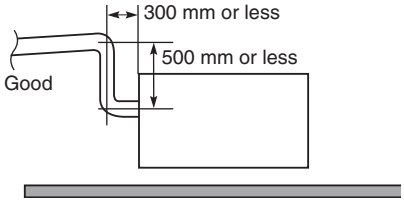

Fig. 2-125

- Do not install the pipe with an upward slant from the connection port. This will cause the drain water to flow backward and leak when the unit is not operating. (Fig. 2-126)

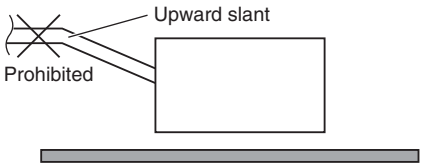

Fig. 2-126

- Do not apply force to the piping on the unit side when connecting the drain pipe. The pipe should not be allowed to hang unsupported from its connection to the unit. Fasten the pipe to a wall, frame, or other support as close to the unit as possible. (Fig. 2-127)

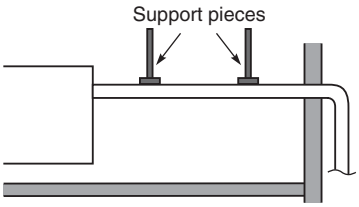

Fig. 2-127

4-13-37. Checking the Drainage

After wiring and drain piping are completed, use the following procedure to check that the water will drain smoothly. For this, prepare a bucket and wiping cloth to catch and wipe up spilled water.

(1) Connect power to the power terminal board (R, S terminals) inside the electrical component box.

(2) Remove the tube cover and slowly pour about 1,200 cc of water through the opening into the drain pan to check drainage.

(3) Short-circuit the check pin (CHK) on the indoor control circuit board and operate the drain pump. Check the water flow through the transparent drain port and see if there is any leakage.

⚠ CAUTION

Be careful since the fan will start when you short the pin on the indoor control board.

(4) When the drainage check is complete, open the check pin (CHK) and remount the insulator and drain cap onto the drain inspection port.

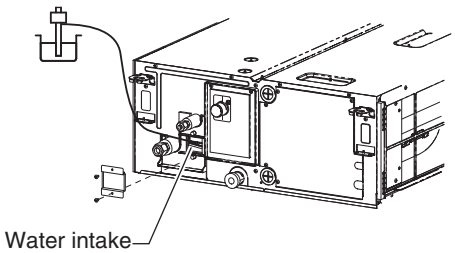

Fig. 2-128

4. Installation Instructions

4-13-38. Connecting Duct to Air Intake Port Side

(1) First pull out a filter in the direction of the electrical equipment box in the unit. (Fig. 2-129)
The pre-installed filter will not be used any more.

(2) Then remove the seal packing, bracket and filter attached to the side of the air intake port. (Fig. 2-129)

(3) Install the duct (field supply).
See the figure for the dimension of the installation hole.
Use M5 self-tapping screws for installation. (Fig. 2-130)

NOTE

- Select an air-intake grille with a filter at a local shop.
- To get clean air and to extend the service life of the air conditioner, an air filter must be installed in the air intake. For installation and cleaning the air filter, consult your dealer or service center.

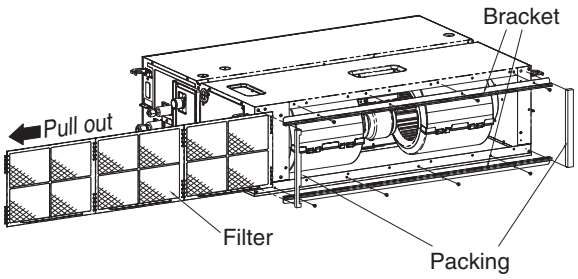

Fig. 2-129

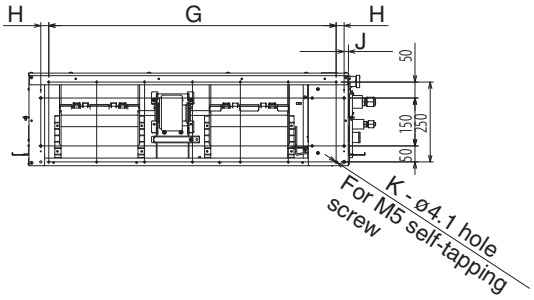

Type	G	H	J	K
22, 28, 36, 45, 56	600 (Pitch 150 × 4)	25	113	14
60, 73, 90	900 (Pitch 150 × 6)	25	13	18
106, 140, 160	1,350 (Pitch 150 × 9)	0	13	24

Fig. 2-130

2

4. Installation Instructions

4-13-39. External Static Pressure Setting

Choose one of the following methods from “a”, “b”, “c” or “d” as shown in the flow chart (within the dotted lines) and then make the setting accordingly.

a. No setting modification..... : Use-as-is at shipment (there are cases in which the setting may differ from the shipment setting when reset after once setting the external static pressure.)

b. Manual setting (set with the PC board)..... : For high static pressure. Switching method with the short-circuit connector.

c. Manual setting (set with the wired remote controller) ..... : Low static pressure ~ high static pressure

d. Auto airflow volume setting (set on the wired remote controller) .... : Air outlet volume is automatically adjusted to the rated airflow volume with the auto airflow control drive.

Flow of External Static Pressure

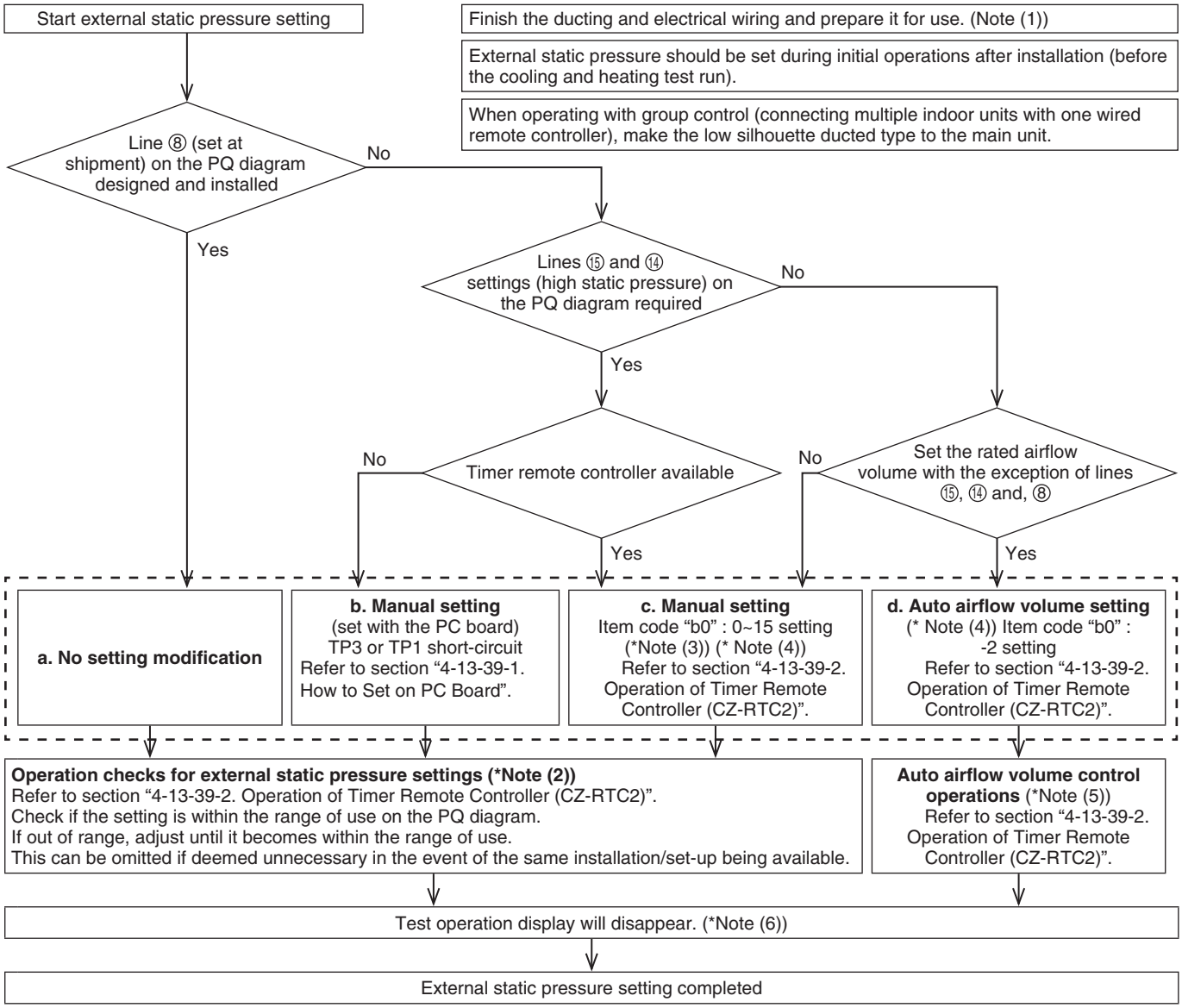

NOTE

(1) Check the following items before performing the setting-check operations or auto airflow volume operations.
   1) Check to make sure that the electrical wiring and ducting have been completed. Activate the stand-by mode. In particular, make sure that the closed damper located in the middle of the duct is open, if installed. Also, make sure that air filters have been installed inside the air inlet duct.
   Check to make sure air is not leaking from the joints.
   2) If multiple air outlets and air inlets are included, adjust the airflow volume ratio of all of them until they meet the design airflow ratio.
   3) Make sure the address setting has been completed.

(2) The operation check will be completed in approximately three minutes if the settings have been made correctly. The settings will be modified if they are out of the range of use (max. 30 mins.). If this is not completed within 31 minutes, check whether the air speed is set to “H” or not.

4. Installation Instructions

(3) Refer to Table 2-20-1 and Fig. 2-132 for details on the relationship between the value of item code “b0” and the external static pressure.

(4) When set in group control (connecting multiple indoor units with one wired remote controller), set each indoor unit to item code “b0”. When amending the setting after selecting [b. Manual setting] (due to airflow path changes, etc.), it is necessary to cancel [b. Manual setting] (disconnect short-circuit connector). When [b. Manual setting] has not been cancelled, [c. Manual setting] and [d. Auto airflow volume setting] will be activated if selected, but [b Manual setting] takes precedence when the power is switched back on after power outages, etc.

(5) If this is not completed within 8 minutes, check the drive mode, air speed and air inlet temperature.

(6) When set in group control (connecting multiple indoor units with one wired remote controller), the test run operations display will disappear once the external static pressure setting check or auto airflow volume control operation check have been completed for the main unit. Decisions on sub-unit complete are not possible. The test run operation display will disappear after one hour even if the external status pressure setting check or auto airflow volume control operation check have not been completed.

⚠ CAUTION

- **Be sure to check that the external static pressure is within the range for use and then make the setting. Failure to observe this may result in insufficient airflow or water leakages. Refer to Fig. 2-132 for the external static pressure setting range.**
- **There are cases in which automatic variable dampers and other mounted items may trigger the P12 alarm on systems that modify the static pressure of outdoor units when the auto airflow volume control operations or setting check operations are carried out if high static pressure in the outdoor unit is lowered. In this event, lower the dampers, etc., so that the static pressure in the outdoor unit reaches its lowest level, and then carry out the auto airflow volume control operations or setting check operations.**
- **Be sure to set the [External Static Pressure Setting] once again after amending the airflow path for the duct or air outlet after setting the external static pressure.**
- **Set the air inlet temperature within the range for use. The auto airflow volume control will not function if the air inlet temperature is over 45°C or not in the fan mode.**

4-13-39-1. How to Set on PC Board

1. Turn off the power breaker to halt the supply of electricity to the PC board.
2. Open the lid of electrical equipment box and check where the short-circuit pin on the indoor unit control PC board is located (Fig. 2-131)
3. Short circuit the applicable short-circuit pin in accordance with the selected short-circuit pin connected (Fig. 2-132).

   150 Pa : TP3 (2P: yellow) short-circuit

   140 Pa : TP1 (2P: red) short-circuit

   * Use the short-circuit connector (2P: yellow) supplied.

Table 2-19 Selection of connected short-circuit pins

External static pressure at the time of rated airflow volume	Short-circuit pin
Unusable	TP6 (2P: white)
150 Pa	TP3 (2P: yellow)
140 Pa	TP1 (2P: red)

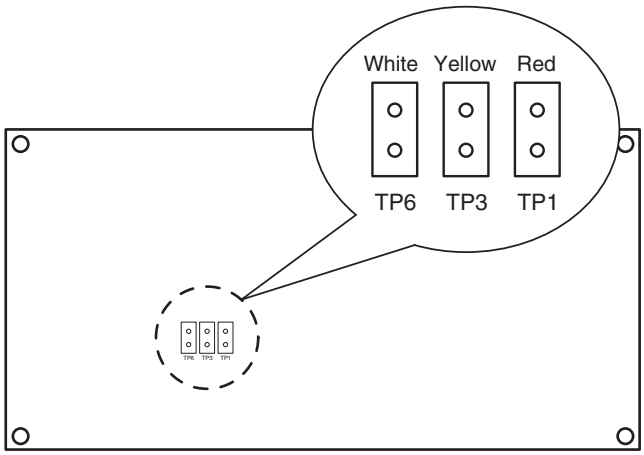

Indoor Unit control PC board

Fig. 2-131

4. Installation Instructions

4-13-39-2. Operating the Timer Remote Controller (CZ-RTC2)

4-13-39-2-1. Setting Item Code "b0"

1. Press and hold down the [🔧], [CAN CEL] and [SET] buttons simultaneously for 4 or more seconds.
   (SETTING, the Unit No., Item Code and Detailed Data will blink on the remote controller's LCD display.)
2. The indoor unit numbers in the group control will be sequentially displayed whenever the Unit Select button is pressed [UNIT].
   Only the fan motor for the selected indoor unit will operate during this.
3. Specify the "b0" item code by pressing the [▲]/[▼] buttons for the temperature setting buttons and confirm the values.
   ("-001" set at shipment)
4. Press the [▲]/[▼] buttons for the time to amend the values for the set data.
   Refer to table 2-20-1 and Fig. 2-132 and select a value between "0001" and "0015".
   Select "-002" if the auto airflow volume setting is activated.
5. Press the [SET] button.
   The display will stop blinking and remain illuminated.
6. Press the [🔧] button. The fan motor will stop operating and the LCD display will return to the normal stop mode.

4-13-39-2-2. Auto Airflow Volume Control Operations and External Static Pressure Setting-Check Operation

1. Press and hold down the [🔧] button for 4 or more seconds. "TEST" will be displayed on the remote controller's LCD display.
2. Press the [⏻] button to commence the test run.
   [Test Run] will be displayed on the remote controller's LCD display.
3. Select the fan mode and set it to "H" by pressing the [✣] button.

⚠ CAUTION

Auto airflow volume control operations and external static pressure setting-check operations will not be performed unless [H] has been selected for the fan mode.

4. The fan motor will be activated and auto airflow volume control operations or external static pressure setting-check operations will commence.
   The power of the airflow will change while these operations are in progress.
   The external static pressure setting-check operations and auto airflow volume control operations will be completed in about 3 to 30 minutes.
   The "TEST" display will be extinguished from the remote controller's LCD display.
5. Press the [⏻] button to halt the test run.

Table 2-20-1 Setting the external static pressure

Indoor unit		Item code
22, 28, 36, 45, 56, 60, 73, 90	106, 140, 160	b0
External static pressure of the rated air flow volume (Pa)		
150	150	0015
140	140	0014
130	130	0013
120	120	0012
100	110	0011
70	100	0008
60	70	0006
50	50	0005
30	30	0003
10	10	0001
No auto airflow volume setting		-001
Auto airflow volume setting		-002

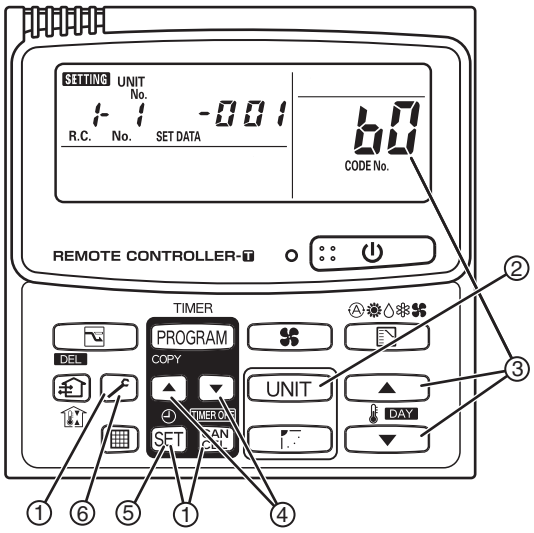

* Failure to set this parameter may result in decreased airflow and condensation.

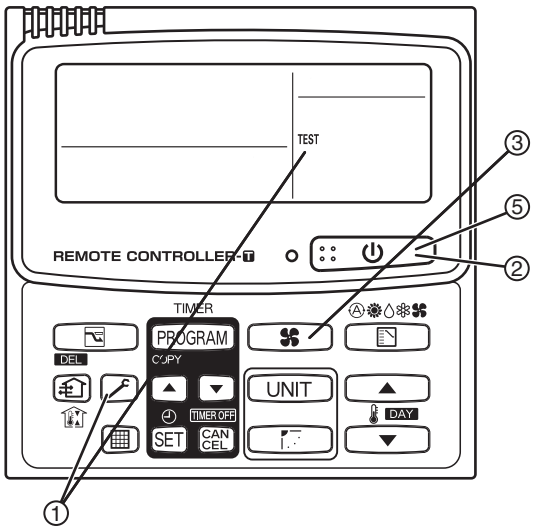

4. Installation Instructions

Indoor Fan Performance

		Item code "bD"																			
		00 15		00 14		00 13		00 12		00 11		00 08		00 06		00 05		00 03		00 01	
		Cooling	Heating	Cooling	Heating	Cooling	Heating	Cooling	Heating	Cooling	Heating	Cooling	Heating	Cooling	Heating	Cooling	Heating	Cooling	Heating	Cooling	Heating
Tap	⑮	H	H									Setting at shipment									
	⑭			H	H																
	⑬	M	M			H	H														
	⑫							H	H												
	⑪				M					H	H										
	⑧			M			M	M	M			H	H								
	⑥	L	L			M				M	M			H	H						
	⑤											M	M			H	H				
	③				L		L	L	L	L	L			M	M	M	M	H	H		
	①			L		L						L	L	L	L			M	M	H	H
	①-2															L	L	L	L	M	M
	①-3																			L	L

22, 28, 36, 45 types

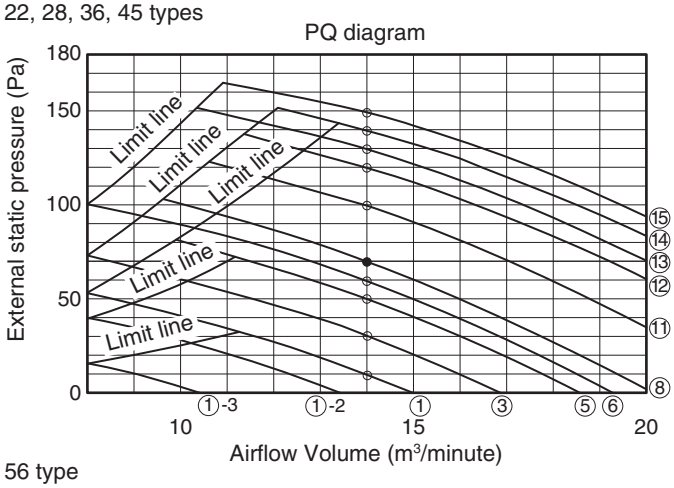

56 type

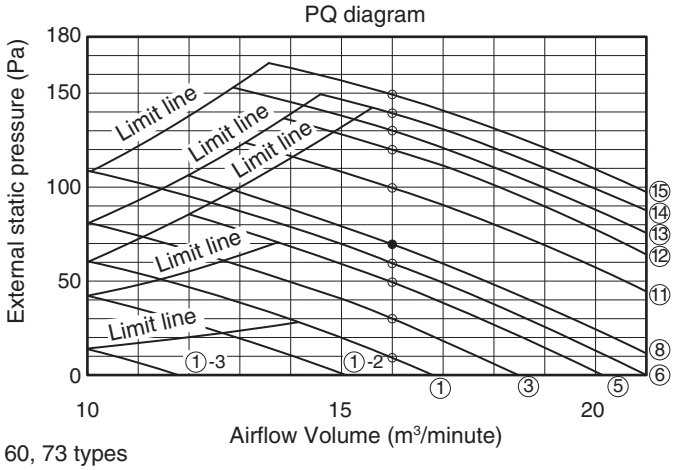

60, 73 types

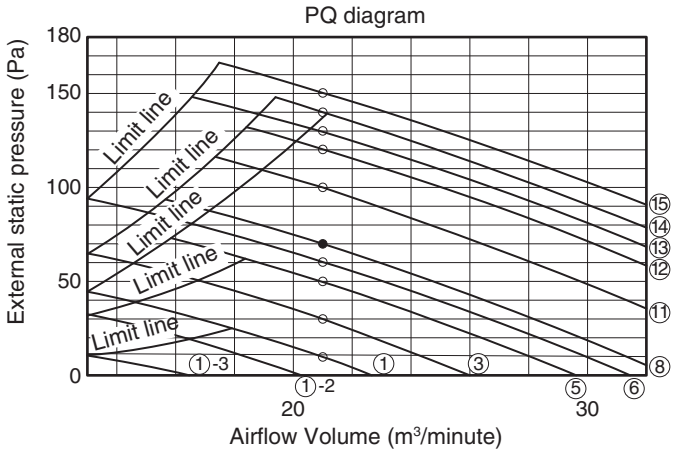

90 type

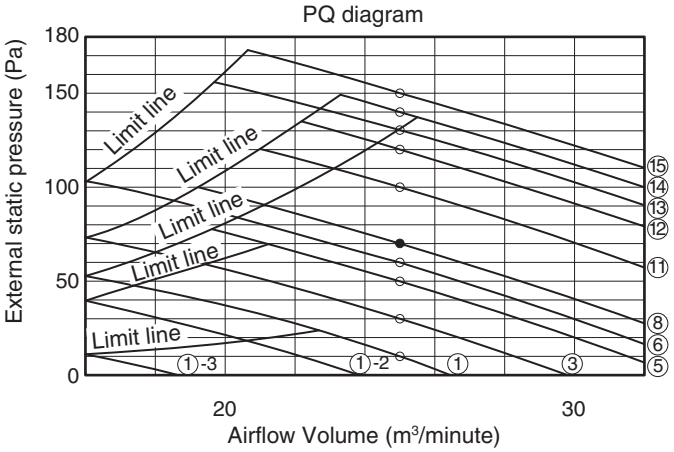

106 type

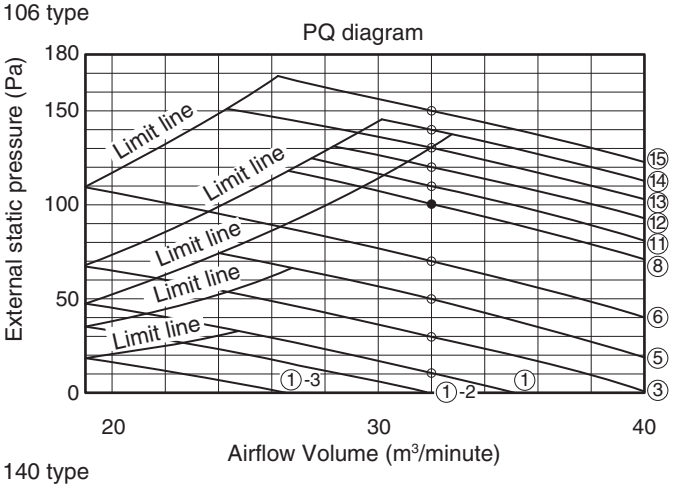

140 type

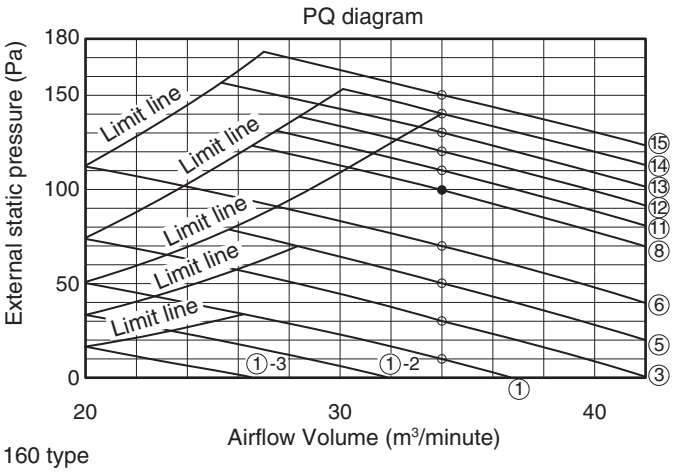

160 type

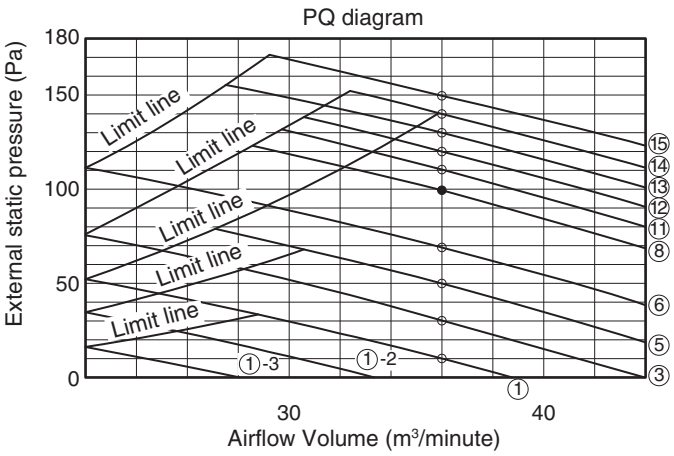

Fig. 2-132

4. Installation Instructions

● Slim Low Static Ducted Type (M1 Type)

4-13-40. Required Minimum Space for Installation and Service

- This air conditioner is usually installed above the ceiling so that the indoor unit and ducts are not visible. Only the air intake and air outlet ports are visible from below.
- The minimum space for installation and service is shown in the diagram. (Fig. 2-133)
- *H dimension means the minimum height of the unit.
- Select the *H dimension such that a downward slant of at least 1/100 is ensured as indicated in "**4-13-42. Installing the Drain Pipe**".

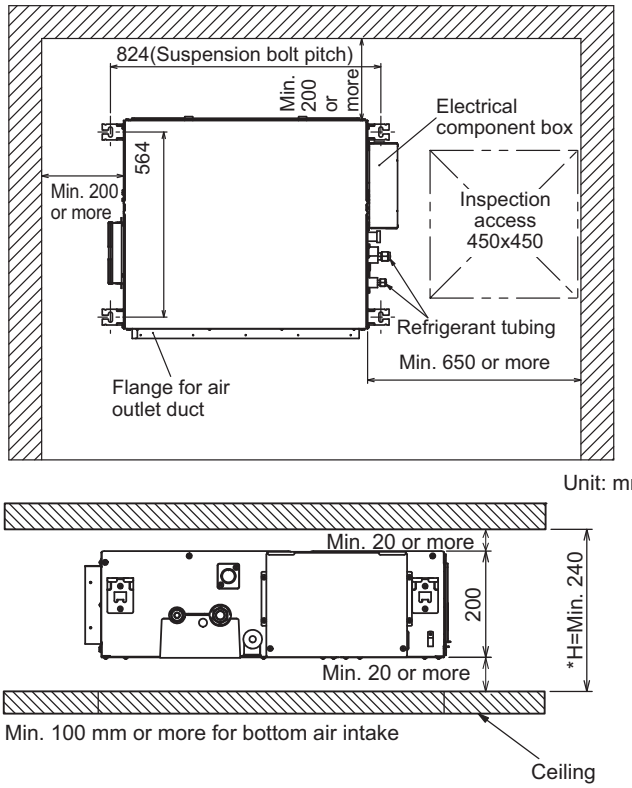

Fig. 2-133

- The diagram shows the detailed dimensions of the indoor unit. (Fig. 2-134)

unit : mm

①	Refrigerant tubing joint (narrow tube)
②	Refrigerant tubing joint (wide tube)
③	Upper and bottom drain port (O.D.26mm)
④	Suspension lug
⑤	Power supply outlet (ø17)
⑥	Frange for air discharge duct
⑦	PI cover
⑧	Electrical component box
⑨	Filter
⑩	Inter-unit control wiring and control wiring for group control outlet (ø15)
⑪	Remote control wiring outlet (ø15)

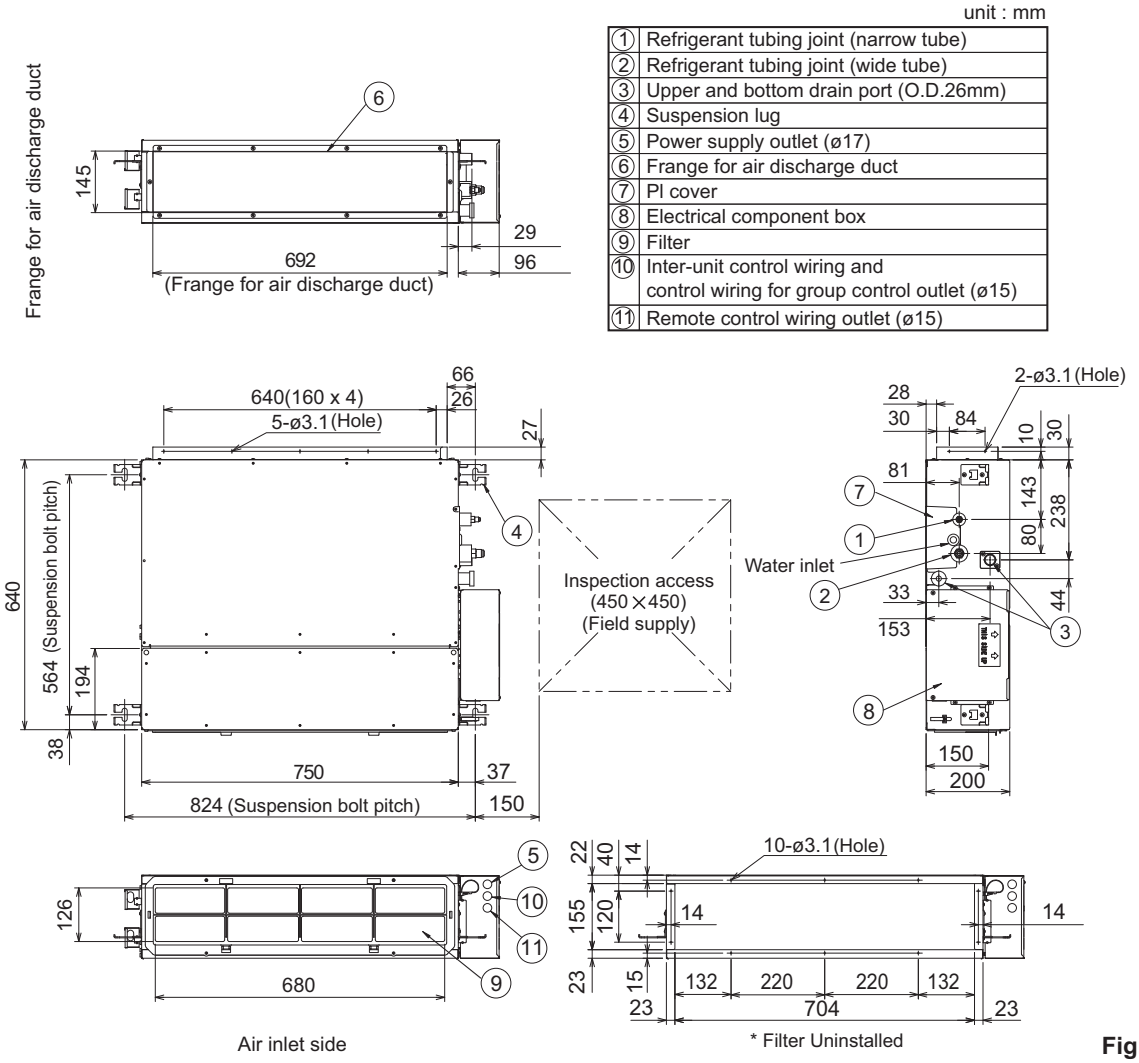

Fig. 2-134

4. Installation Instructions

4-13-41. Preparations Before Installation

(1) Confirm the positional relationship between the unit and suspension bolts. (Fig. 2-135)

● Install the inspection opening on the control box side where maintenance and inspection of the control box and drain pump are easy. Install the inspection opening also in the lower part of the unit.

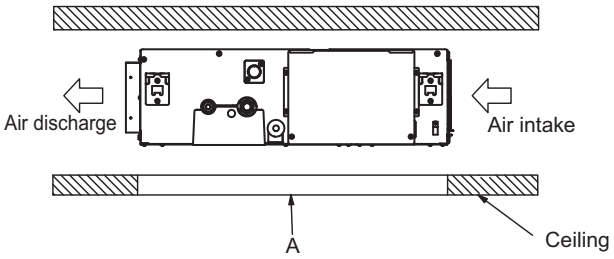

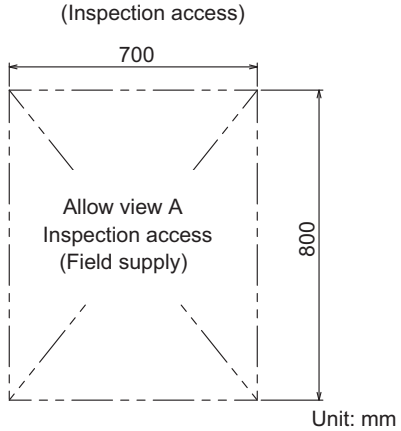

Fig. 2-135

(2) Make sure the range of the unit's external static pressure is not exceeded.
(See the technical documentation for the range of the external static pressure setting.)

(3) Open the installation hole. (Pre-set ceilings)

● Once the installation hole is opened in the ceiling where the unit is to be installed, pass refrigerant piping, drain piping, transmission wiring, and remote controller wiring (It is not necessary if using a wireless remote controller) to the unit's piping and wiring holes. See " **5. HOW TO PROCESS TUBING** ", " **4-13-45. Installing the Drain Pipe** " and " **3. Electrical Wiring** ".

● After opening the ceiling hole, make sure ceiling is level if needed. It might be necessary to reinforce the ceiling frame to prevent shaking. Consult an architect or carpenter for details.

4-13-42. For Bottom Intake

For bottom intake, replace the chamber lid and protection net in the procedure shown in the diagram.

(1) Remove the frame filter assy.
Remove the chamber lid. (Fig. 2-136)

(2) Refer to the diagram to attach the chamber lid and frame filter assy in the direction of the arrow. (Fig. 2-137)
Note: Attach the lid with the dummy holes downward.

(3) Attach the frame filter assy (supplied) in the manner shown in the diagram. (Fig. 2-138)

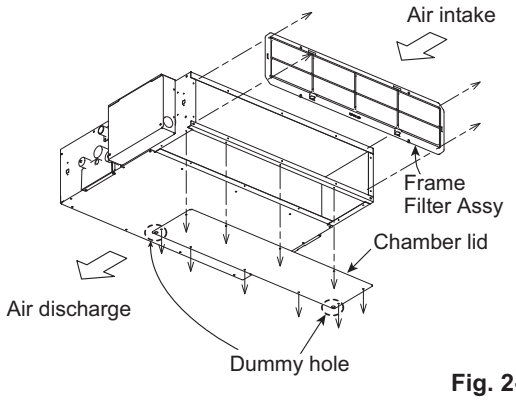

Fig. 2-136

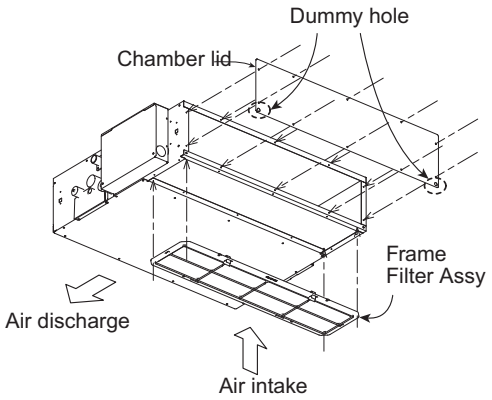

Fig. 2-137

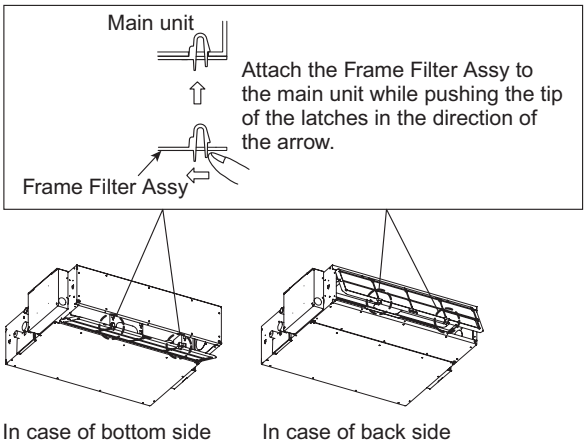

Fig. 2-138

4. Installation Instructions

4-13-43. Installing the Duct

Connect the duct supplied in the field as shown in Fig. 2-139.

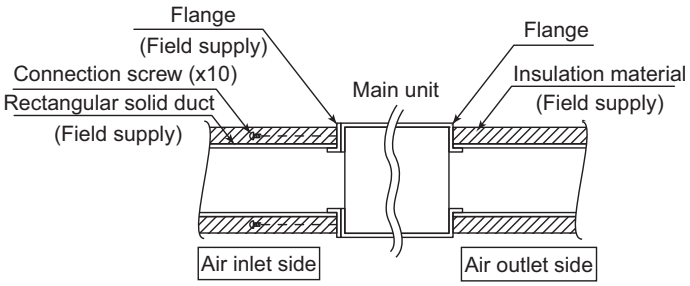

Fig. 2-139

Air inlet side

- Attach the duct and intake-side flange (field supply).
- Connect the flange to the main unit with 10 - ø3.1 (Hole) screws.
- Wrap the intake-side flange and duct connection area with aluminum tape or something similar to prevent air escaping.

⚠ CAUTION

When attaching a duct to the intake-side, be sure to attach an air filter inside the air passage on the intake-side. (Use an air filter whose dust collecting efficiency is at least 50% in a gravimetric technique.) The included filter is not used when the intake duct is attached.

Air outlet side

- Connect the duct according to the air outside of the outlet-side flange.
- Wrap the outlet-side flange and the duct connection area with aluminum tape or something similar to prevent air escaping.

⚠ CAUTION

- Be sure to insulate the duct to prevent condensation from forming. (Material: glass wool or polyethylene foam, 25 mm thick)
- Use electric insulation between the duct and the wall when using metal ducts to pass metal laths of the net or fence shape or metal plating into wooden buildings.
- Be sure to explain about the way of maintaining and cleaning local procurements (air filter, grille [both air outlet and suction grille], etc.) to your customer.

4-13-44. Suspending the Indoor Unit

Depending on the ceiling type:

- Insert suspension bolts as shown in the diagram. (Fig. 2-140)
  or
- Use existing ceiling supports or construct a suitable support as shown in the diagram. (Fig. 2-141)

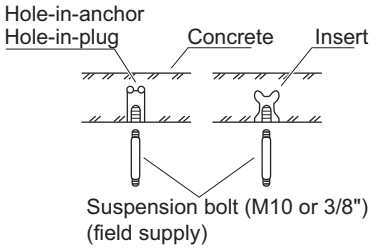

Fig. 2-140

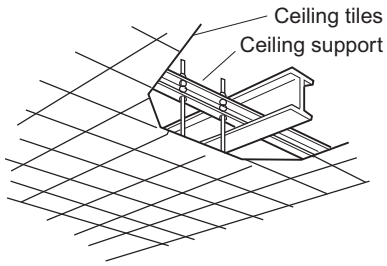

Fig. 2-141

⚠ WARNING

It is important that you use extreme care in supporting the indoor unit inside the ceiling. Ensure that the ceiling is strong enough to support the weight of the unit.
Before hanging the unit, test the strength of each attached suspension bolt.

(1) When placing the unit inside the ceiling, determine the pitch of the suspension bolts referring to the dimensional data as shown in Fig. 2-133.
Tubing must be laid and connected inside the ceiling when suspending the unit. If the ceiling is already constructed, lay the tubing into position for connection to the unit before placing the unit inside the ceiling.

(2) Screw in the suspension bolts allowing them to protrude from the ceiling as shown in Fig. 2-140. (Cut the ceiling material, if necessary.)

(3) Thread the 3 hexagonal nuts and 2 washers (field supply) onto each of the 4 suspension bolts as shown in Fig. 2-142 and 2-143. Use 1 nut and 1 washer for the upper part, and 2 nuts and 1 washer for the lower part, so that the unit will not fall off the suspension lugs.

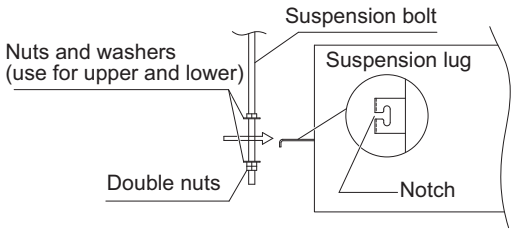

Fig. 2-142

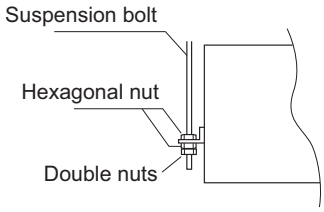

Fig. 2-143

4. Installation Instructions

(4) Adjust the height of the unit.
(5) Check the unit is horizontally level.

CAUTION

- Make sure the unit is installed level using a level or a vinyl hose filled with water. In using a vinyl hose instead of a level, adjust the top surface of the unit to the surface of the water at both ends of the vinyl hose and adjust the unit horizontally. (One thing to watch out for in particular is if the unit is installed so that the slope is not in the direction of the drain piping, this might cause leaking.) (Fig. 2-144)

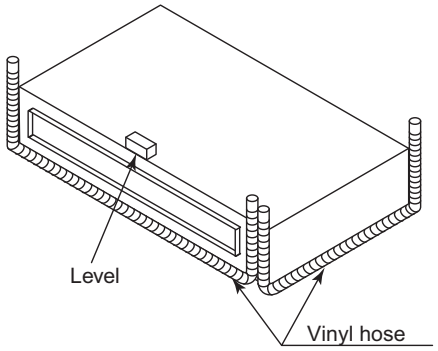

Fig. 2-144

(6) Tighten the upper nut.

4-13-45. Installing the Drain Pipe

(1) Prepare standard hard PVC pipe (O.D. 26 mm) for the drain and use the supplied hose band to prevent water leaks. (Fig. 2-145)
The PVC pipe must be purchased separately.
The transparent drain part on the unit allows you to check drainage.

CAUTION

- Attach so that the hose band fastener is on the side of the drain port. (Fig. 2-145)
- Attach the hose bands so that each is approximately 5 to 25 mm from the end of the supplied drain hose. (Fig. 2-145)
- **Do not use adhesive at the drain connection port on the indoor unit.**
- **Insert the drain pipe until it contacts the socket, as shown in the figure above, then secure it tightly with the hose band.**
- **Do not use the supplied drain hose bent at a 90° angle. (The maximum permissible bend is 45°.)**
- **Tighten the hose clamps so their locking nuts face in the horizontal direction.**
- **Make sure that the drain port is not a downward slant from the joint section (may lead to abnormal noise).**

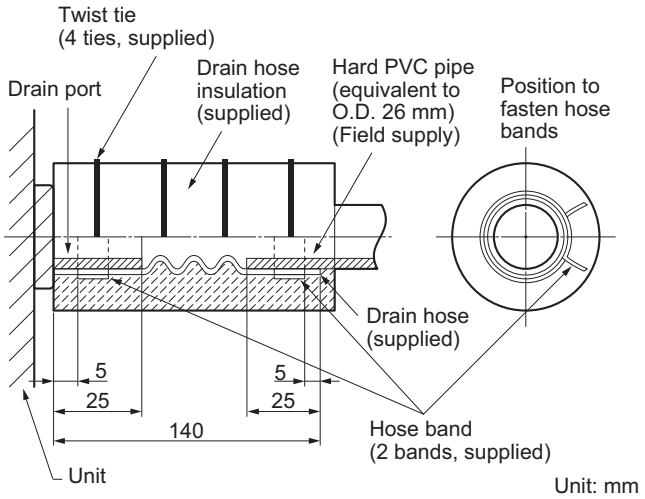

Fig. 2-145

NOTE

Make sure the drain pipe has a downward slant (1/100 or more) and that there are no water traps.

CAUTION

- **Do not install an air bleeder as this may cause water to spray from the drain pipe outlet. (Fig. 2-146)**
- **If it is necessary to increase the height of the drain pipe, the section directly after the connection port can be raised a maximum of 500 mm. Do not raise it any higher than 500 mm, as this could result in water leaks. (Fig. 2-147)**
- **Do not install the pipe with an upward slant from the connection port. This will cause the drain water to flow backward and leak when the unit is not operating. (Fig. 2-148)**

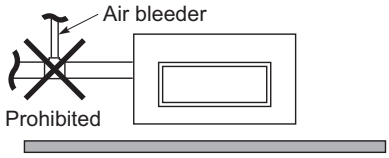

Fig. 2-146

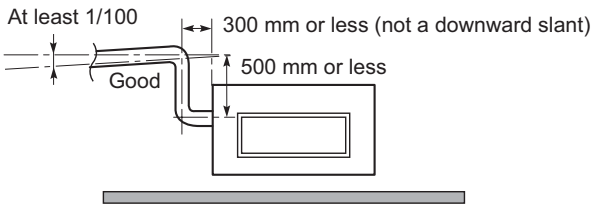

Fig. 2-147

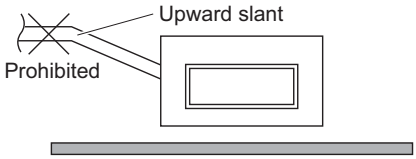

Fig. 2-148

4. Installation Instructions

- **Do not apply force to the piping on the unit side when connecting the drain pipe. The pipe should not be allowed to hang unsupported from its connection to the unit. Fasten the pipe to a wall, frame, or other support as close to the unit as possible. (Fig. 2-149)**

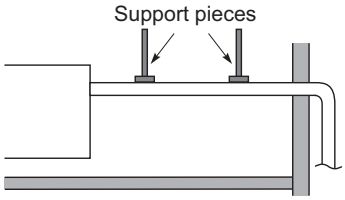

Fig. 2-149

4-13-46. Checking the Drainage

After wiring and drain piping are completed, use the following procedure to check that the water will drain smoothly. For this, prepare a bucket and wiping cloth to catch and wipe up spilled water.

(1) Connect power to the power terminal board (R, S terminals) inside the electrical component box.

(2) Remove the eyelet cap and through the opening, slowly pour about 500 cc of water into the drain pan to check drainage.

(3) Short the check pin (CHK) on the indoor control board and operate the drain pump. Check the water flow through the transparent drain port and see if there is any leakage.

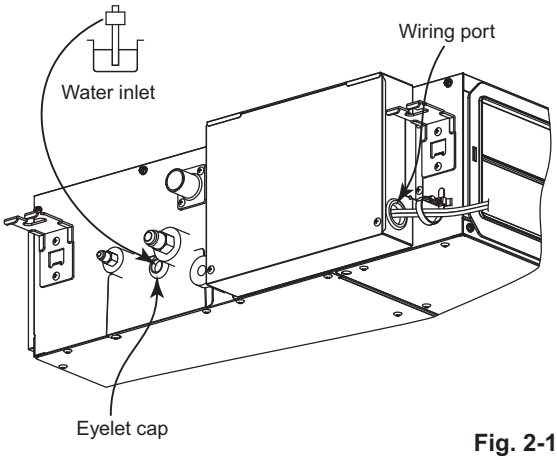

Fig. 2-150

⚠ **CAUTION**

Be careful since the fan will start when you short the pin on the indoor control board.

(4) When the check of drainage is complete, open the check pin (CHK) and remount the insulator and drain cap onto the drain inspection port.

4. Installation Instructions

4-13-47. Increasing the Fan Speed

■ For Short Circuit Connection

- The standard (before shipment) external static pressure is shown in the table below.
- When using with a higher static pressure, it is necessary to change to the high static pressure mode.

External static pressure

Type	15/22	28	36/45/56
Standard (Pa)	10	15	15
High static pressure (Pa)	30	30	40

When using with high static pressure mode, set the indoor unit control board as shown in Fig. 2-151.

Follow the below procedure while the unit is turned off.

(1) Open the cover of the electrical box and confirm that it is the indoor unit control board.

(2) Connect the short circuit connector to the short circuit pin TP3 (2P: Yellow) of the indoor unit control board.

- In case of wired remote control setting, do not use the short circuit connector.

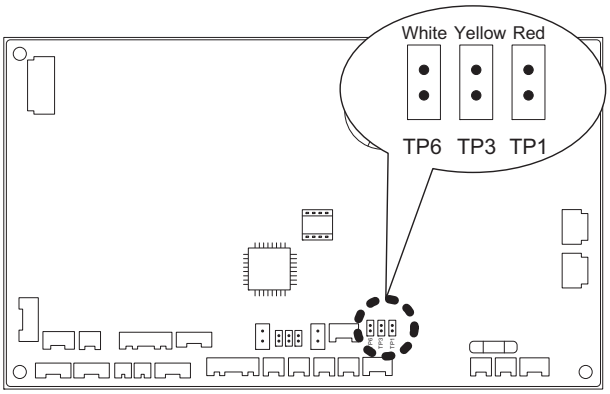

Indoor control board

Fig. 2-151

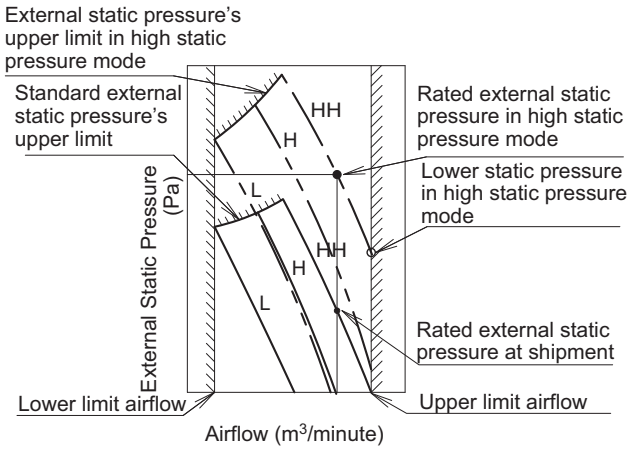

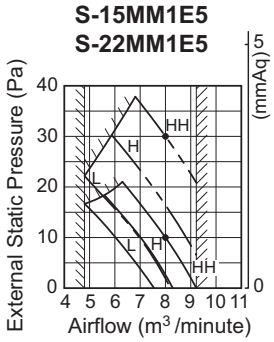

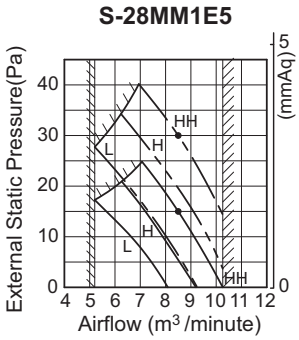

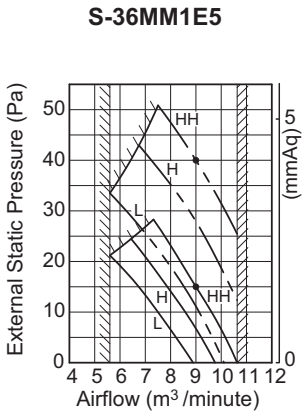

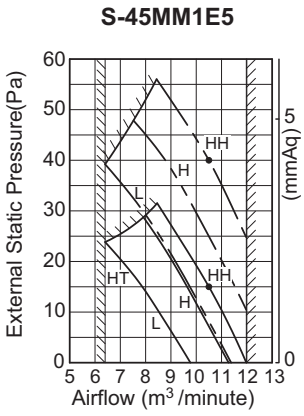

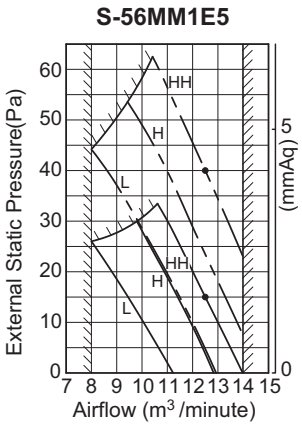

Fig. 2-152

4. Installation Instructions

● High Static Pressure Ducted Type (E1 Type)

4-13-48. Required Minimum Space for Installation and Service (73, 106, 140 Types)

- This air conditioner is usually installed above the ceiling so that the indoor unit and ducts are not visible. Only the air intake and air outlet ports are visible from below.
- The minimum space for installation and service is shown in Fig. 2-153.
- It is recommended that space be provided (600 × 600 mm) for checking and servicing the electrical system.
- Fig. 2-154 and Table 2-20-2 show the detailed dimensions of the indoor unit.

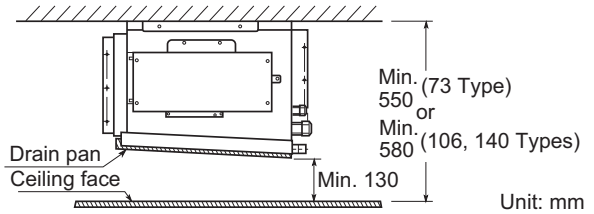

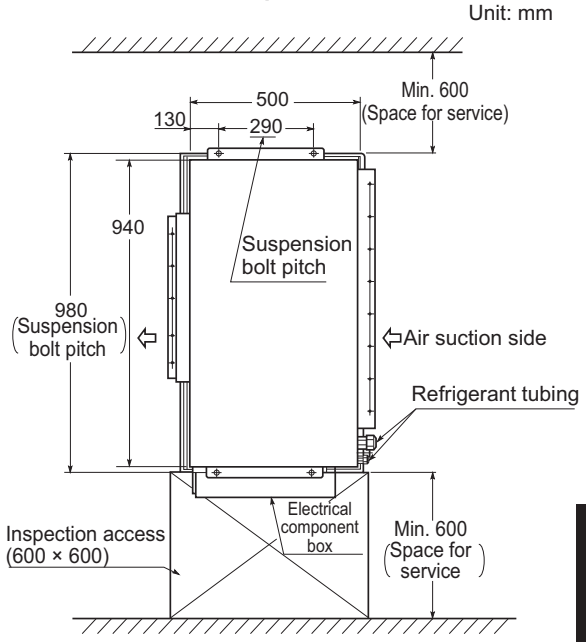

Fig. 2-153

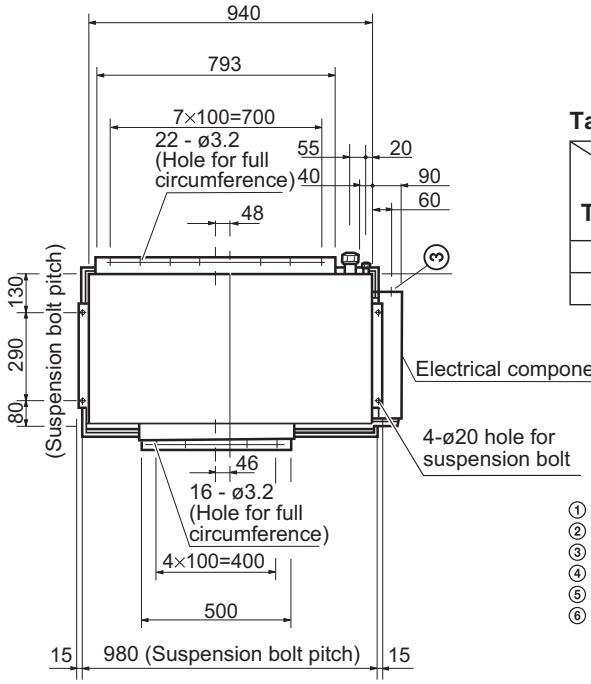

Table 2-20-2 Unit: mm

Type \ Length	A	B	C
73, 106	420	395	68
140	450	425	98

① Refrigerant liquid line (ø9.52 or ø6.35)
② Refrigerant gas line (ø19.05 or ø15.88)
③ Power supply entry
④ Drain connection (25A, O.D. 32 mm)
⑤ Duct connection for suction
⑥ Duct connection for discharge

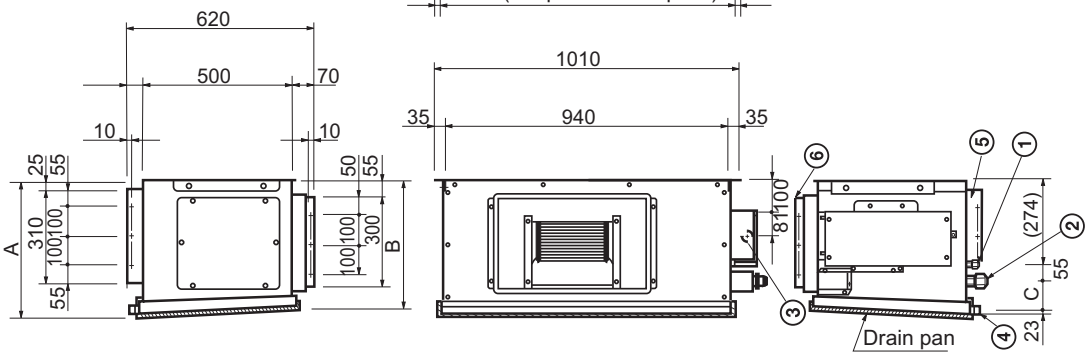

Unit: mm

Fig. 2-154

4. Installation Instructions

4-13-49. Required Minimum Space for Installation and Service (224, 280 Types)

- This air conditioner is usually installed above the ceiling so that the indoor unit and ducts are not visible. Only the air intake and air outlet ports are visible from below.
- The minimum space for installation and service is shown in Fig. 2-155.
- It is recommended that space be provided (600 × 600 mm) for checking and servicing the electrical system.
- Fig. 2-156 shows the detailed dimensions of the indoor unit.

Unit: mm

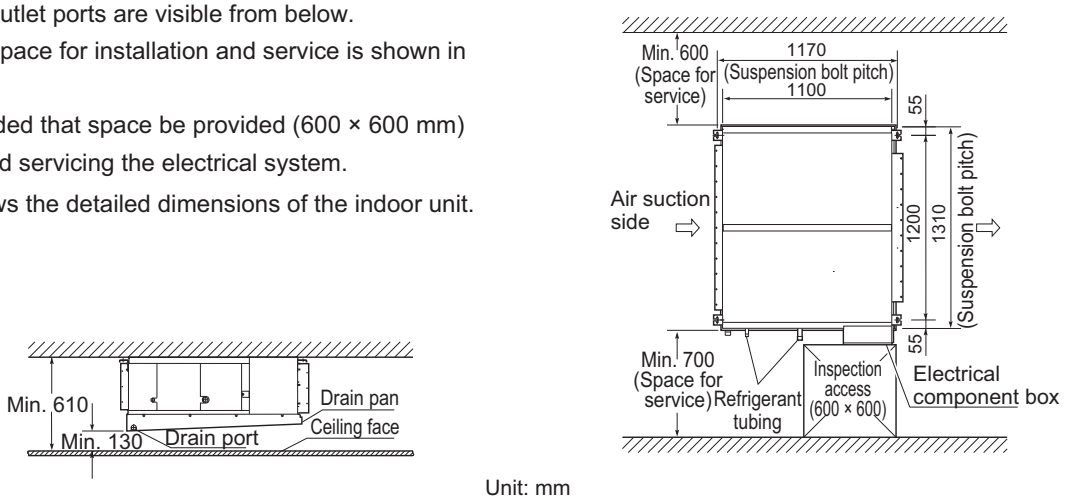

Unit: mm

Fig. 2-155

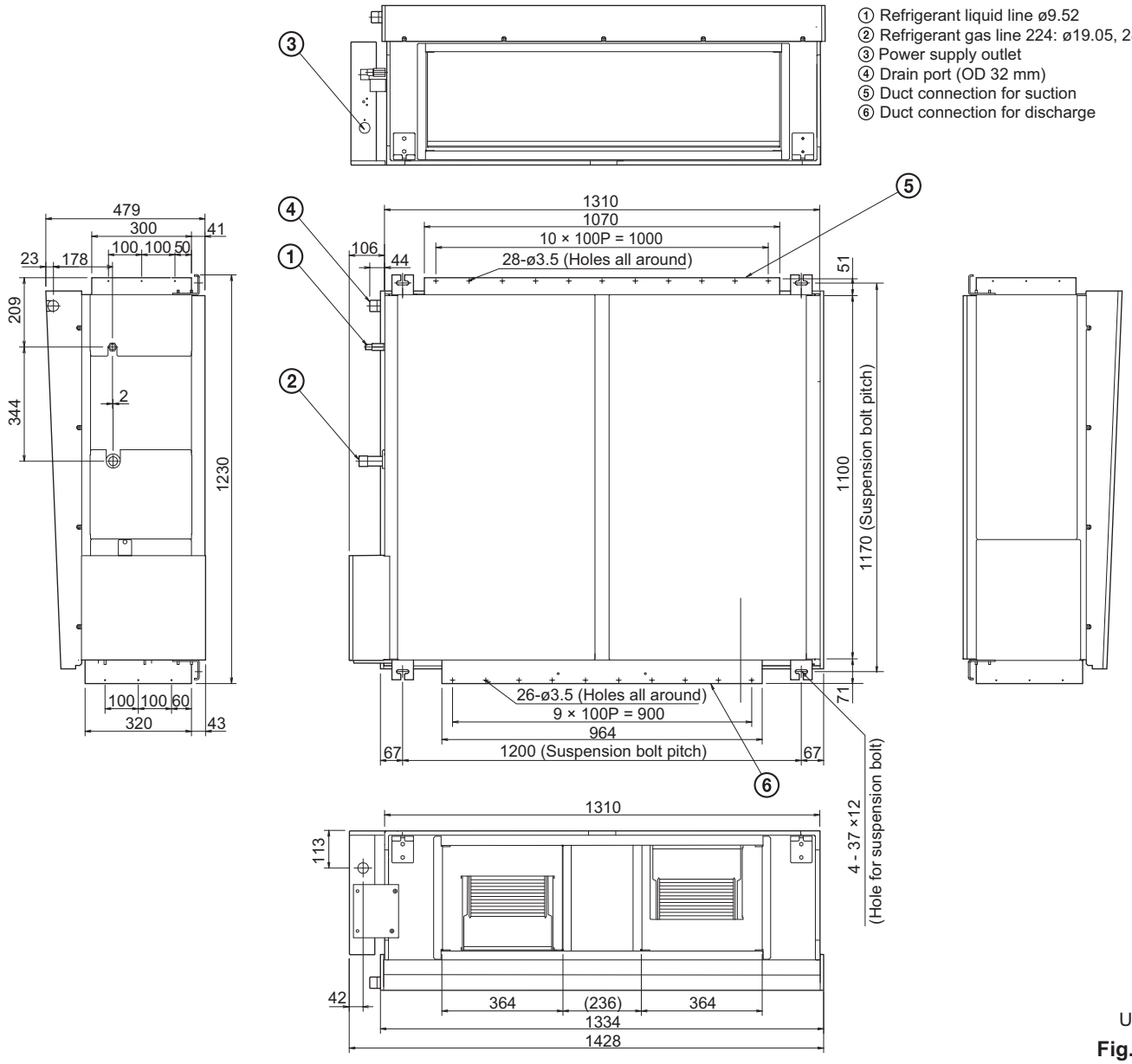

Unit: mm

Fig. 2-156

4. Installation Instructions

4-13-50. Suspending the Indoor Unit

Depending on the ceiling type:

- Insert suspension bolts as shown in Fig. 2-157

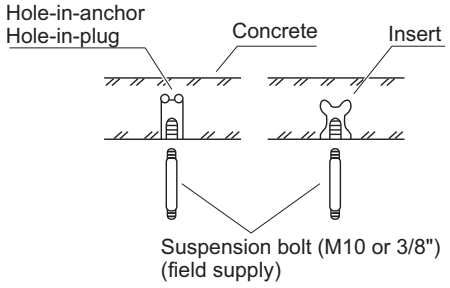

Fig. 2-157

or

- Use existing ceiling supports or construct a suitable support as shown in Fig. 2-158.

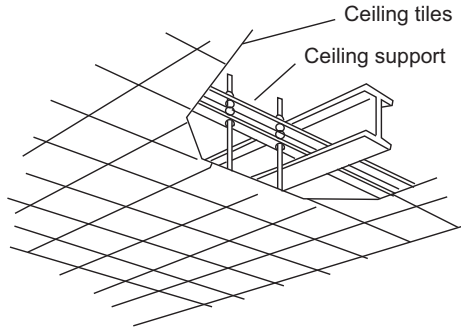

Fig. 2-158

⚠ WARNING

It is important that you use extreme care in supporting the indoor unit inside the ceiling.
Ensure that the ceiling is strong enough to support the weight of the unit. Before hanging the unit, test the strength of eac attached suspension bolt.

(1) When placing the unit inside the ceiling, determine the pitch of the suspension bolts referring to the dimensional data given previously. (Figs. 2-153 and 2-154)
Tubing must be laid and connected inside the ceiling when suspending the unit. If the ceiling is already constructed, lay the tubing into position for connection to the unit before placing the unit inside the ceiling.

(2) Screw in the suspension bolts allowing them to protrude from the ceiling as shown in Fig. 2-157. (Cut the ceiling material, if necessary.)

(3) Suspend and fix the indoor unit using the 2 hexagonal nuts (field supply) and special washers (supplied with the unit) as shown in Fig. 2-159.

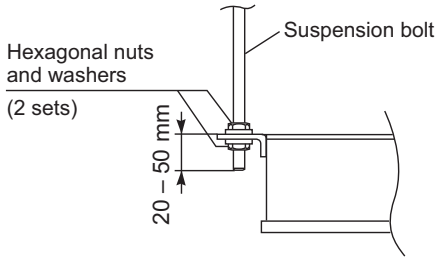

Fig. 2-159

■ RAP Valve Kit (Refrigerant Accumulation Protector Valve Kit) (CZ-P160RVK2)

When installing a E1 type indoor unit (either the 8-hp 224 type or 10-hp 280 type), you must also install the RAP Valve Kit (CZ-P160RVK2).

- Connect 2 RAP valve kits in parallel for 224 or 280 type.
- Secure the RAP valve kit using suspension bolts, etc. within 30 meters from the indoor unit.
- Do not place the RAP valve kit directly on the ceiling.

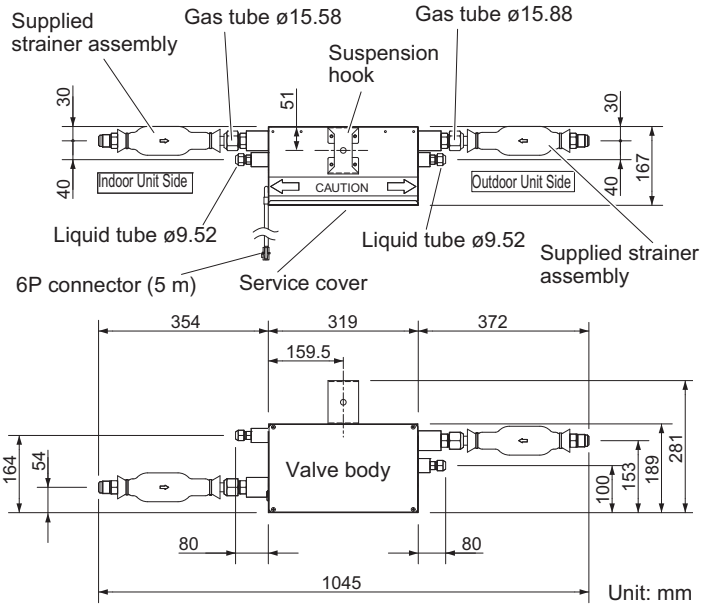

Note: This figure shows the valve body with the suspension hook and strainer assemblies installed.

Fig. 2-160

4. Installation Instructions

4-13-51. Installing the Refrigerant Tubing

The size of the refrigerant tubing is as shown in the table below.

Table 2-21

	224 Type	280 Type
Gas tube	ø19.05 or ø22.22 (Brazing connection)	ø22.22 (Brazing connection)
Liquid tube	ø9.52 (Flare connection)	ø9.52 (Flare connection)

- When brazing the gas tubing, cool the tubing with dampened shopcloths as you work, as shown in the figure below, to protect the unit's thermistor from the heat generated by brazing.
- Be sure to insulate both the gas tubing and liquid tubing. In addition, wrap the supplied insulation material around the tubing joints, and fasten in place with vinyl tape or other means. Failure to insulate the tubing may result in water leakage from condensation.
- Plug all gaps at tube through-holes in the unit with insulation or a similar substance to prevent air leakage.
- When connecting an embedded ceiling type unit (like this one) to a refrigerant system where individual operation is possible, install 2 RAP valve kits (CZ-P160RVK2) in parallel.
  (For details on connecting the RAP valve kit, refer to the manual that came with the kit.)

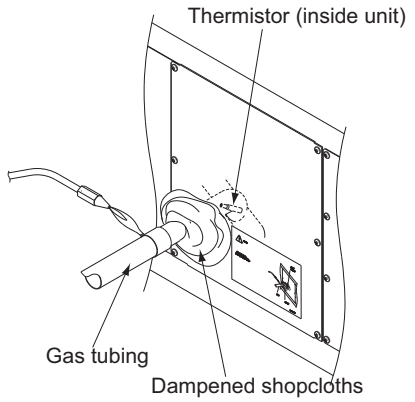

Fig. 2-161

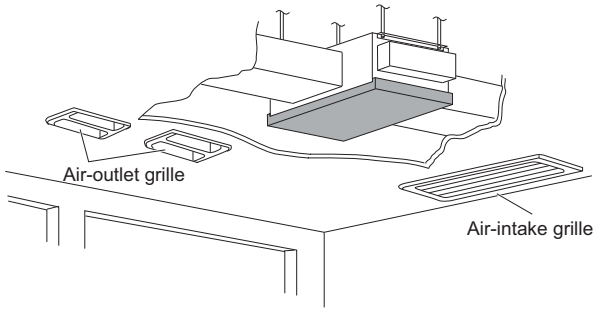

Fig. 2-162

4-13-52. Installing the Drain Piping

(1) Prepare standard hard PVC pipe (O.D. 32 mm) for the drain and use the supplied drain socket to prevent water leaks. The PVC pipe must be purchased separately. When doing this, apply adhesive for the PVC pipe at the connection point.

(2) If connecting a drain joint (supplied) to the threaded drain port, first wrap the drain port threads with sealing tape, then connect the joint. (Fig. 2-163)

(3) After connecting the drain pipe securely, wrap insulator (field supply) around the pipe.

(4) Ensure the drain pipe has a downward slant (1/100 or more) and prepare traps as indicated in Fig. 2-164.

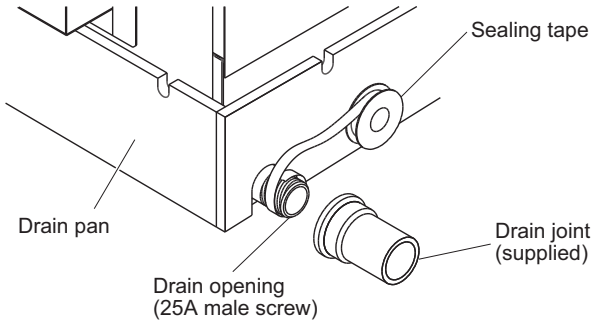

Fig. 2-163

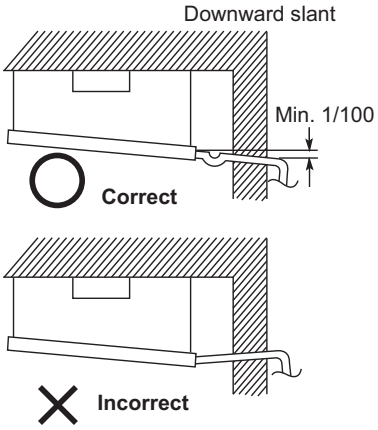

Fig. 2-164

4. Installation Instructions

(5) Also, in another part of the pipe arrangement, prepare traps with an inspection plug to clean dust or debris that may cause leaking of water. (Fig. 2-165)

(6) After connecting the drain piping, slowly pour water into the drain pan to check that the water drains smoothly.

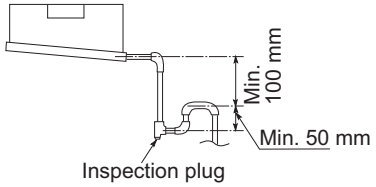

Fig. 2-165

4-13-53. Caution for Ducting Work

- This unit has high static pressure (applicable external static pressure Max. 167 to 216 Pa {17–22 mm Aq}. In the case of small pressure resistance (for instance, a short duct), install a damper for adjusting air flow volume as air flow volume / air flow noise increases.
- If the air conditioner is to be installed in a room such as an office or meeting room which needs a low sound level, provide a supply and return noise absorption chamber with an acoustic liner.
- Include an air filter (field supply) at the return duct.

Indoor Fan Performance

How to Read the Diagram

The vertical axis is the External Static Pressure (Pa) while the horizontal axis represents the Air Flow (m^3/minute). The characteristic curve for the “H,” “Med,” and “Lo” fan speed control. The nameplate values are shown based on the “H” air flow. Therefore in the case of 73 Type, the flow is 23 m^3/minute, while the External Static Pressure is 190 Pa at “H” position. If the external static pressure is too great (due to long extension of duct, for example), the air flow volume may drop too low at each air outlet.

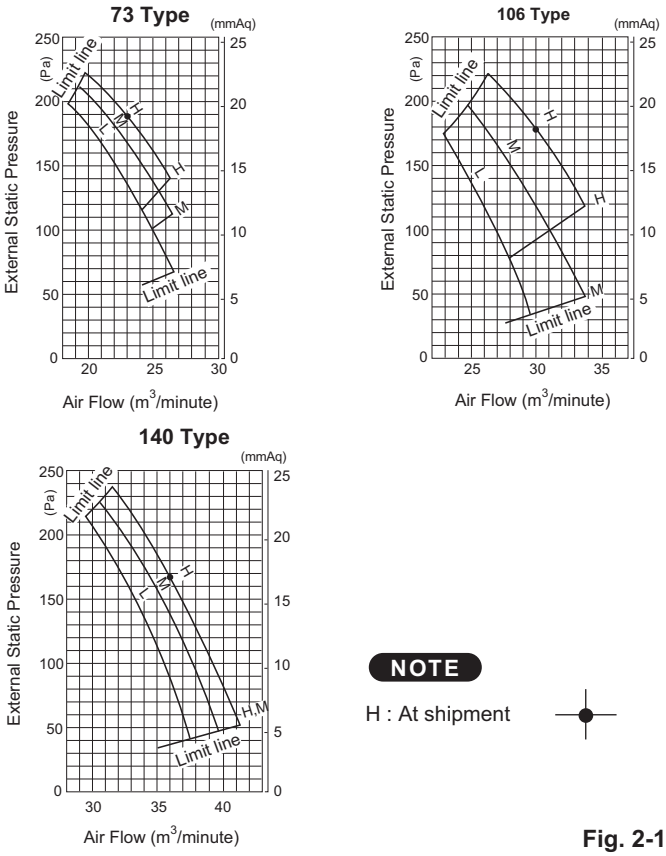

NOTE

H : At shipment

Fig. 2-166

4-13-54. Increasing the Fan Speed (280 Type Only)

If external static pressure is too great (due to long extension of ducts, for example), the air flow volume may drop too low at each air outlet. This problem may be solved by increasing the fan speed using the following procedure:

(1) Remove 4 screws on the electrical component box and remove the cover plate.

(2) Disconnect the fan motor sockets in the box.

(3) Take out 2 booster cables from option carton box (sockets at both ends).

(4) Securely connect the booster cable’s 2 sockets between the disconnected fan motor sockets in step 2 as shown in Fig. 2-167.

(5) Place the cable neatly in the box and reinstall the cover plate.

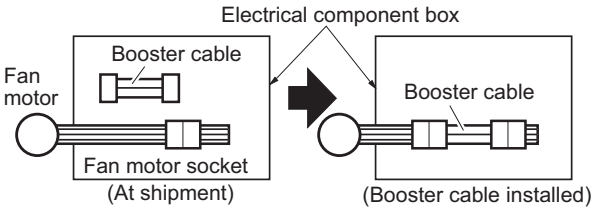

Fig. 2-167

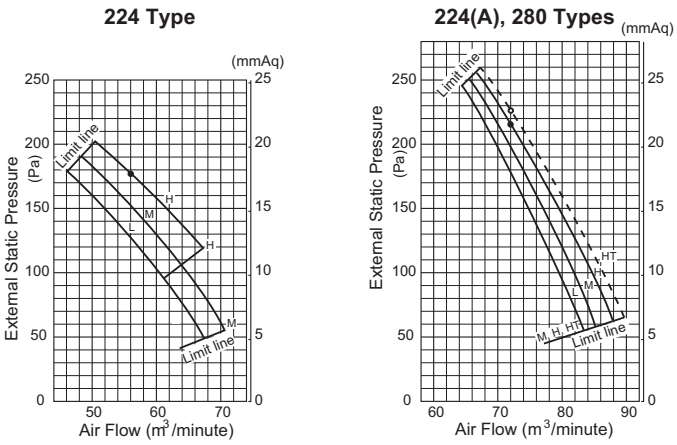

NOTE HT : Using booster cable H : At shipment

Fig. 2-168

4. Installation Instructions

- **1-Way Cassette Type (D1 Type)**

4-13-55. Preparation for Suspending

This unit uses a drain pump. Use a carpenter's level to check that the unit is level.

4-13-56. Suspending the Indoor Unit

(1) The measurements of the ceiling hole and suspension bolt positions should be as shown in Fig. 2-169. The length of the suspension bolts should extend a minimum of 15 mm beyond the bottom of the unit suspension bracket. Refer to Fig. 2-174.

(2) Use the full-scale installation diagram (printed on the package) to determine the suspension bolt pitch. The positional relationships between the suspension brackets and the unit, and between the brackets and the ceiling panel, should be as shown in Figs. 2-169 & 2-170.

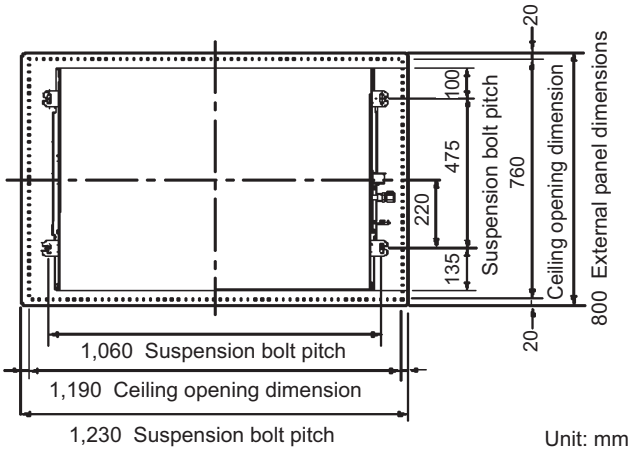

Unit: mm

Fig. 2-169

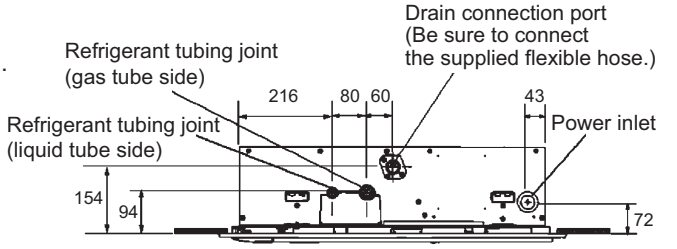

Unit: mm

Fig. 2-170

(3) Depending on the ceiling type:

- Insert suspension bolts as shown in Fig. 2-171

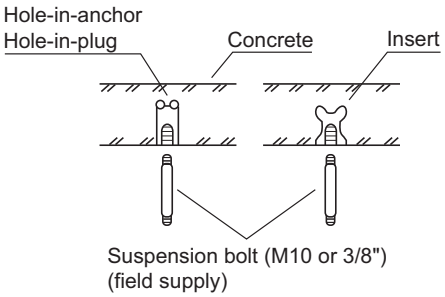

Fig. 2-171

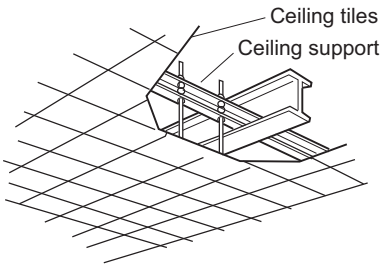

Fig. 2-172

or

- Use existing ceiling supports or construct a suitable support as shown in Fig. 2-172.

⚠ **WARNING**

It is important that you use extreme care in supporting the indoor unit from the ceiling. Ensure that the ceiling is strong enough to support the weight of the unit. Before hanging the unit, test the strength of each attached suspension bolt.

(4) Cut the ceiling material, if necessary. (Figs. 2-169 and 2-170)

(5) If the system requires fresh air to be drawn into the unit, cut and remove the insulation (both externally and internally) at the location shown as Ⓐ in Fig. 2-173.

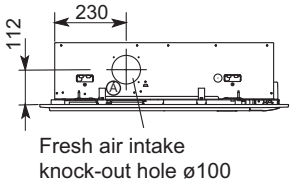

Fig. 2-173

4. Installation Instructions

4-13-57. Placing the Unit Inside the Ceiling

(1) When suspending the unit, attach gauges A and B (with packaging pad) to the indoor unit suspension brackets using the supplied M5 screws (2 for each bracket) to create the ceiling opening dimensions.

CAUTION

- **Tubing and wiring work will be necessary inside the ceiling after the unit has been suspended. Therefore, if the ceiling is already installed, perform tubing and wiring up to the connection position before suspending the unit.**

(2) Attach the special washers (supplied) and nuts (field supply) to the suspension bolts (4 locations).

CAUTION

- **Use 3/8" or M10 nuts.**
- **The length of the suspension bolts should be such that there is clearance of at least 15 mm below the bottom of the bracket, as shown in Fig. 2-175. If the suspension bolts are too long, they will contact the ceiling panel and louver motor cover, making installation impossible.**

(3) Thread the 3 hexagonal nuts and 2 washers (field supply) onto each of the 4 suspension bolts as shown in Fig. 2-175. Use 1 nut and 1 washer for the upper side, and 2 nuts and 1 washer for the lower side, so that the unit will not fall off the suspension lugs.

(4) The indoor unit should be suspended from the suspension bolts (Fig. 2-175) so that the distance between the bottom of the suspension lug and the bottom surface of the ceiling is 17 to 22 mm. (Fig. 2-174) Clearance between the indoor unit and the bottom surface of the ceiling is adjustable after the ceiling panel is attached to the unit.
Use gauges A and B to adjust the height of the indoor unit as shown below.

Supplied with the unit

Installation gauge (Use the packaging side pad.)		1	Gauge A (Install on tubing side.)
		1	Gauge B (Install on opposite side of tubing.)

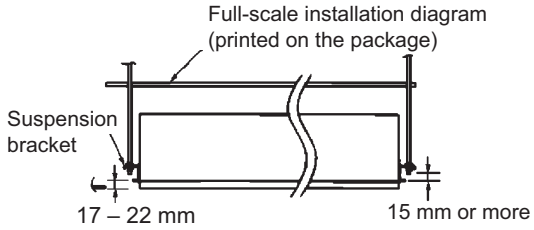

Fig. 2-174

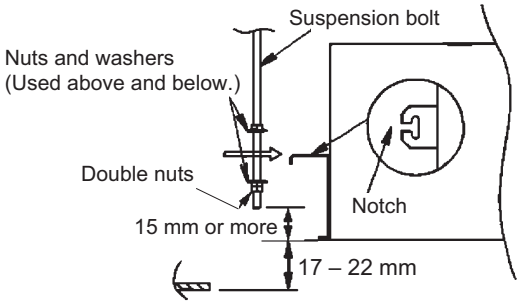

Fig. 2-175

(5) The unit should be adjusted using water level or as shown in Fig. 2-176 so that the drain pipe side is slanted 5 mm lower than the opposite side.

(6) After completing the adjustment of the clearance, fasten all upper and lower suspension nuts tightly.

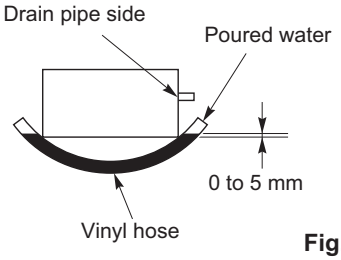

Fig. 2-176

4. Installation Instructions

4-13-58. Installing the Drain Piping

(1) Prepare standard hard PVC pipe (O.D. 32 mm) for the drain and use the supplied drain hose and hose band to prevent water leaks. The PVC pipe must be purchased separately. The unit's transparent drain port allows you to check drainage. (Fig. 2-177)

⚠ CAUTION

- Do not use adhesive at the drain connection port on the indoor unit.
- Insert the drain pipe until it contacts the socket, as shown in Fig. 2-177, then secure it tightly with the hose band.
- Tighten the hose clamps so their locking nuts face upward. (Fig. 2-177)
- Do not use the supplied drain hose bent at a 90° angle. (The maximum permissible bend is 45°.)

(2) After checking the drainage, wrap the supplied packing and drain pipe insulator around the pipe, then secure it with the clamps. (Fig. 2-178)

NOTE

- Make sure the drain pipe has a downward slant (1/100 or more) and that there are no water traps.

⚠ CAUTION

Do not install an air bleeder as this may cause water to spray from the drain pipe outlet. (Fig. 2-179)

- If it is necessary to increase the height of the drain pipe, the pipe can be raised a maximum of 590 mm from the bottom of the ceiling. Do not raise it any higher than 590 mm, as this could result in water leaks. (Fig. 2-180)
- Do not install the pipe with an upward slant from the connection port. This will cause the drain water to flow backward and leak when the unit is not operating. (Fig. 2-181)
- Do not apply force to the piping on the unit side when connecting the drain pipe. The pipe should not be allowed to hang unsupported from its connection to the unit. Fasten the pipe to a wall, frame, or other support as close to the unit as possible. (Fig. 2-182)
- Provide insulation for any pipes that are run indoors.

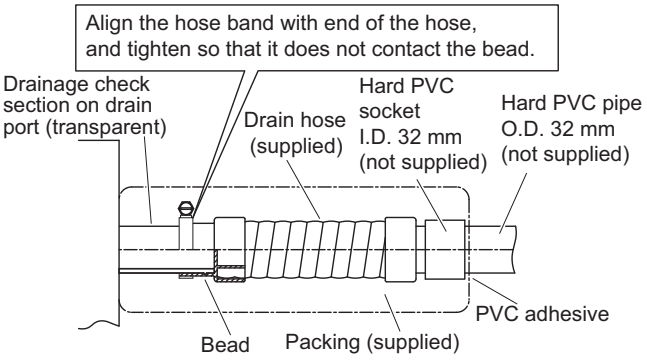

Fig. 2-177

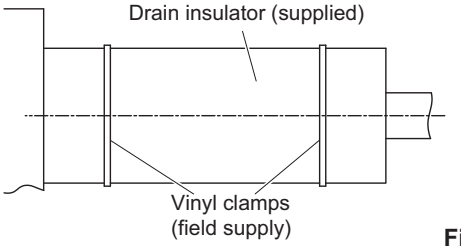

Fig. 2-178

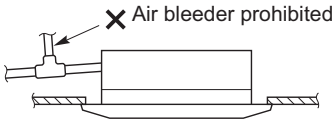

Fig. 2-179

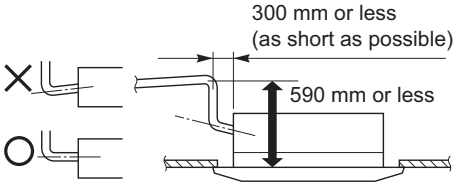

Fig. 2-180

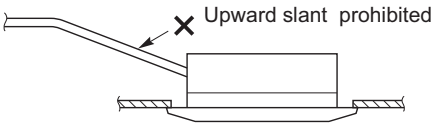

Fig. 2-181

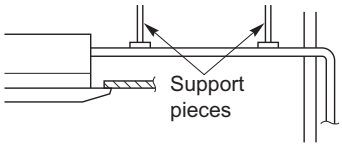

Fig. 2-182

4. Installation Instructions

4-13-59. Checking the Drainage

After wiring and drain piping are completed, use the following procedure to check that the water will drain smoothly.
For this, prepare a bucket and wiping cloth to catch and wipe up spilled water.

(1) Connect power to the power terminal board (R, S terminals) inside the electrical component box.
(2) Short the check pin (CHK) on the indoor control board and operate the drain pump.

⚠ CAUTION

Be careful since the fan will start when you short the pin on the indoor control board.

(3) Pour about 1,200 cc of water into the drain pan using a siphon pump through the air outlet grille. (Fig. 2-183) Check the water flow through the transparent drain pipe and see if there is any leakage.
(4) When the check of drainage is complete, open the check pin (CHK) and remount the insulator.

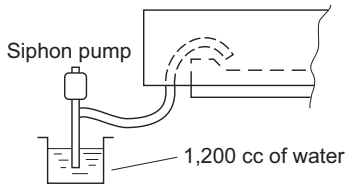

Fig. 2-183

⚠ CAUTION

Use 4 × 8 tapping screws to fasten the drainage cover. If the screws used are longer than 8 mm, it may make a hole in the drain pan and cause leakage.

Removing the side panel

(1) Push the tab on both sides of the side panel inward (a) to disengage the tab (first stage) and move the panel horizontally (b).
(2) Push the area in the vicinity of the tab (second stage) inward while holding both sides of the side panel to remove the side panel.

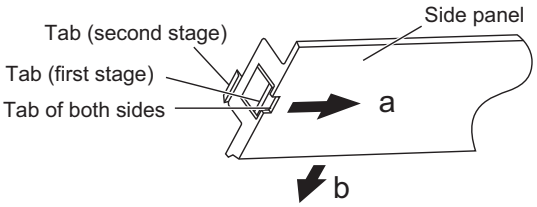

Fig. 2-184

● 2-Way Cassette Type (L1 Type)

4-13-60. Preparation for Suspending

This unit uses a drain pump. Use a carpenter's level to check that the unit is level.

4-13-61. Suspending the Indoor Unit

(1) Follow the diagrams to make the holes in the ceiling.
(2) Depending on the ceiling type:

● Insert suspension bolts as shown in Fig. 2-185

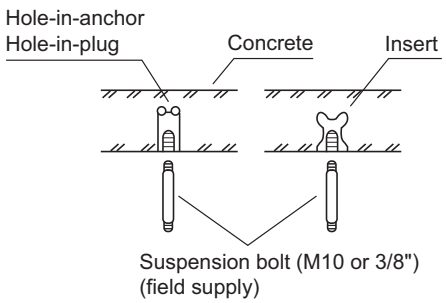

Fig. 2-185

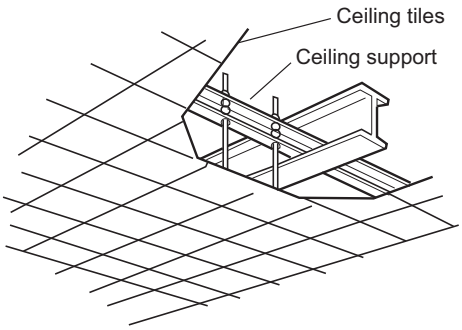

Fig. 2-186

or

● Use existing ceiling supports or construct a suitable support as shown in Fig. 2-186.

⚠ WARNING

It is important that you use extreme care in supporting the indoor unit from the ceiling. Ensure that the ceiling is strong enough to support the weight of the unit. Before hanging the unit, test the strength of each attached suspension bolt.

4. Installation Instructions

(3) Cut the ceiling material, if necessary.
(Refer to Figs. 2-187 and 2-188, and Table 2-22.)

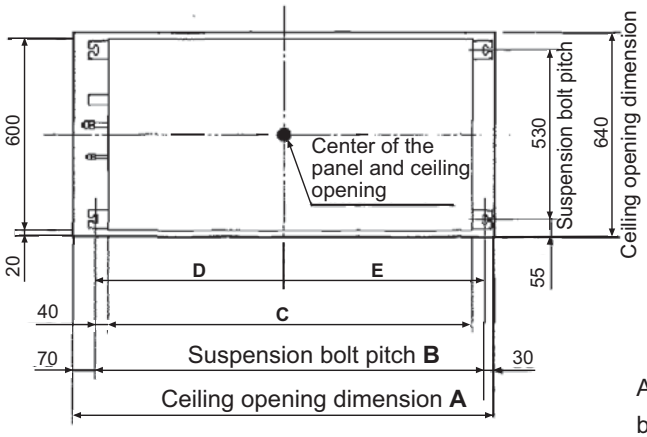

Fig. 2-187

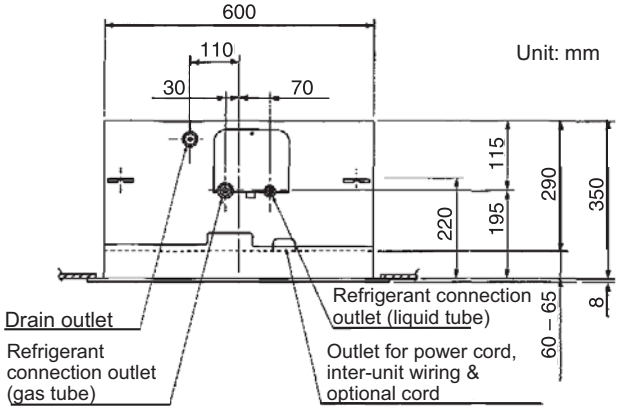

Adjust so that the distance between the indoor unit and the bottom surface of the ceiling is 60 to 65 mm.

Fig. 2-188

Table 2-22 Unit: mm

	A	B	C	D	E
22, 28, 36, 45, 56	1,020	920	840	440	480
73	1,320	1,220	1,140	550	590

(4) If the system requires fresh air to be drawn into the unit, cut and remove the insulation (both externally and internally) at the location shown as Ⓐ in Fig. 2-189.

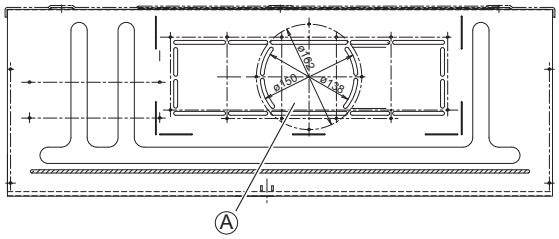

Fig. 2-189

⚠ **CAUTION**

When making the cuts to the insulation, be careful not to damage the drain pan.

4-13-62. Placing the Unit Inside the Ceiling

(1) When placing the unit inside the ceiling, determine the pitch of the suspension bolts.
Tubing must be laid and connected inside the ceiling when suspending the unit. If the ceiling is already constructed, lay the tubing into position for connection to the unit before placing the unit inside the ceiling.

(2) Thread the 3 hexagonal nuts and 2 washers (field supply) onto each of the 4 suspension bolts as shown in Fig. 2-191. Use 1 nut and 1 washer for the upper side, and 2 nuts and 1 washer for the lower side, so that the unit will not fall off the suspension lugs.

(3) The distance between the unit and the opening in the ceiling and the distance between the bottom surface of the ceiling and the bottom surface of the flange of the unit should follow the dimensions given in Fig. 2-190. Use the supplied installation gauge to check.

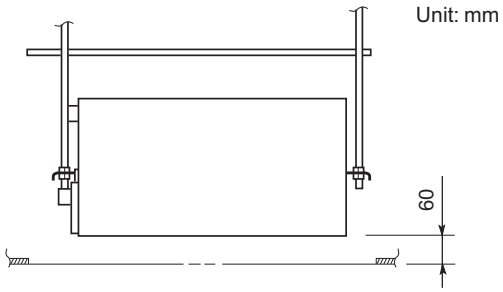

Fig. 2-190

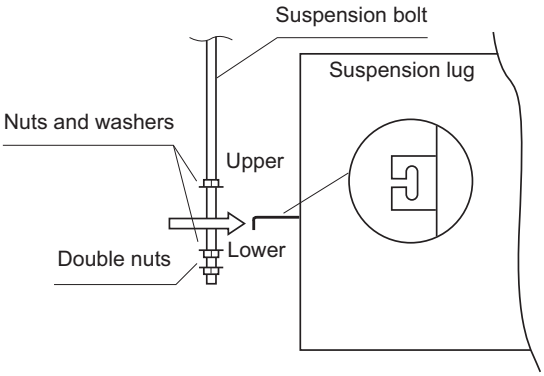

Fig. 2-191

4. Installation Instructions

4-13-63. Installing the Drain Piping

(1) Prepare a standard hard PVC pipe (O.D. 32 mm) for the drain and use the supplied drain hose and hose band to prevent water leaks. The PVC pipe must be purchased separately.
When doing this, leave a gap between the drain socket and the PVC pipe to allow the drainage to be checked.
The unit's transparent drain port allows you to check the drainage. (Fig. 2-192)

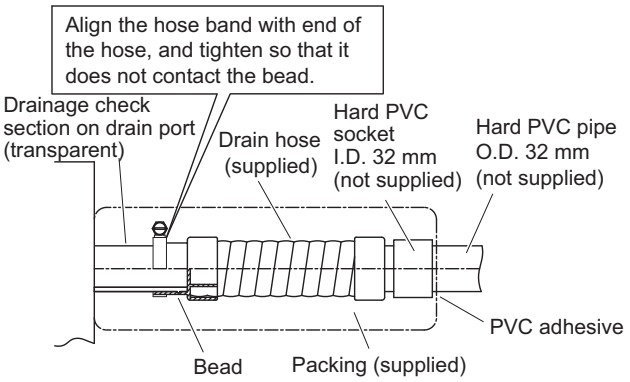

Fig. 2-192

CAUTION

- Do not use adhesive at the drain connection port on the indoor unit.
- Insert the drain pipe until it contacts the socket, as shown in Fig. 2-192, then secure it tightly with the hose band.
- Tighten the hose clamps so their locking nuts face upward. (Fig. 2-192)
- Do not use the supplied drain hose bent at a 90° angle. (The maximum permissible bend is 45°.)

(2) After checking the drainage, wrap the supplied packing and drain pipe insulator around the pipe, then secure it with the supplied clamps. (Fig. 2-193)

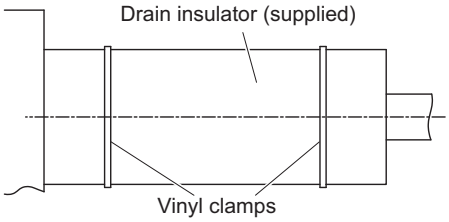

Fig. 2-193

NOTE

Make sure the drain pipe has a downward slant (1/100 or more) and that there are no water traps.

CAUTION

- **Do not install an air bleeder as this may cause water to spray from the drain pipe outlet. (Fig. 2-194)**
- **If it is necessary to increase the height of the drain pipe, the section directly after the connection port can be raised a maximum of 500 mm. Do not raise it any higher than 500 mm, as this could result in water leaks. (Fig. 2-195)**
- **Do not install the pipe with an upward slant from the connection port. This will cause the drain water to flow backward and leak when the unit is not operating. (Fig. 2-196)**
- **Do not apply force to the piping on the unit side when connecting the drain pipe. The pipe should not be allowed to hang unsupported from its connection to the unit. Fasten the pipe to a wall, frame, or other support as close to the unit as possible. (Fig. 2-197)**
- **Provide insulation for any pipes that are run indoors.**

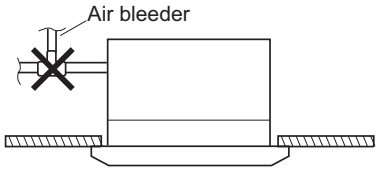

Fig. 2-194

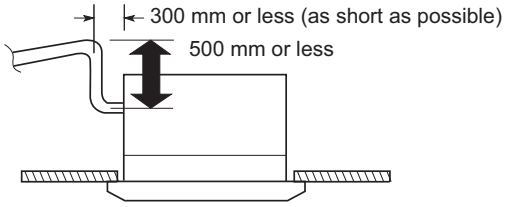

Fig. 2-195

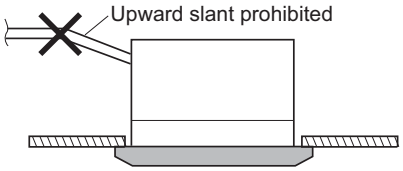

Fig. 2-196

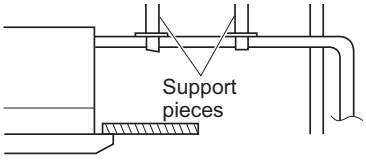

Fig. 2-197

4. Installation Instructions

4-13-64. Checking the Drainage

After wiring and drain piping are completed, use the following procedure to check that the water will drain smoothly. For this, prepare a bucket and wiping cloth to catch and wipe up spilled water.

(1) Connect power to the power terminal board (R, S terminals) inside the electrical component box.

(2) Remove the tube cover and through the opening, slowly pour about 1,200 cc of water into the drain pan to check the drainage.

(3) Short the check pin (CHK) on the indoor control board and operate the drain pump. Check the water flow through the transparent drain port and see if there is any leakage.

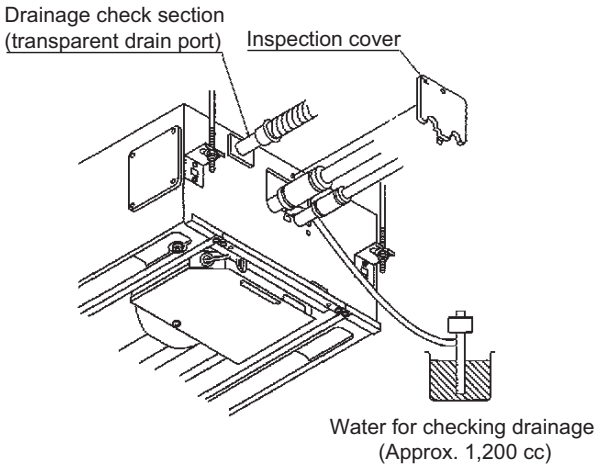

Fig. 2-198

⚠ **CAUTION**

Be careful since the fan will start when you short the pin on the indoor control board.

(4) When the check of drainage is complete, open the check pin (CHK) and remount the tube cover. (Fig. 2-198)

⚠ **CAUTION**

To mount the tube cover, use 4 × 8 tapping screws.(Fig. 2-198) Do not use long screws as they may puncture the drain pan and cause water leakage.

2

- **Wall Mounted Type (K1 Type) 22, 28, 36 types**

4-13-65. Remove the Rear Panel from the Unit

(1) Remove and discard the set screw on the rear panel. (Fig. 2-199)

(2) Press the 2 △ marks on the frame cover and disengage the stationary tabs from the frame. (Fig. 2-200)

(3) Remove the rear panel.

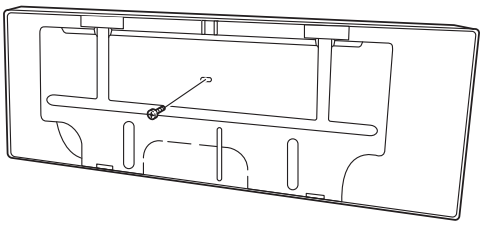

Fig. 2-199

NOTE

Tubing can be extended in 5 directions as shown in Fig. 2-201. Select the direction you need providing the shortest run to the outside unit.

- When left tubing is to be done, switch the drain hose and drain cap. (For details, refer to “Switching drain hose and drain cap”.)

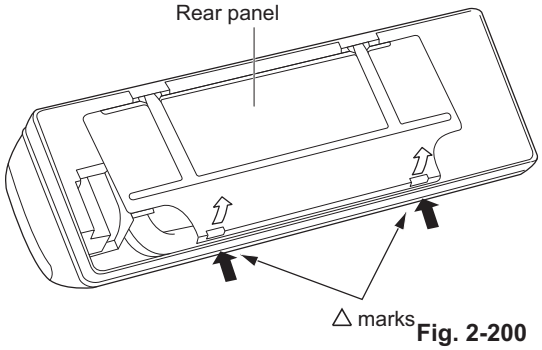

Fig. 2-200

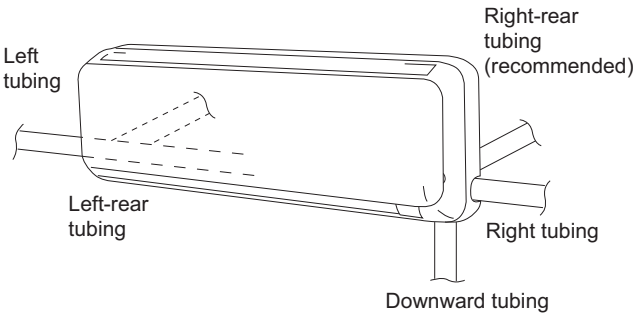

Fig. 2-201

4. Installation Instructions

4-13-66. Make a Hole

(1) Place the rear panel from the indoor unit on the wall at the location selected. Make sure the panel is horizontal, using a carpenter's level or tape measure to measure down from the ceiling. Wait until after cutting the hole before attaching the rear panel to the wall.

(2) Determine which side of the unit you should make the hole for tubing and wiring. (Fig. 2-202)

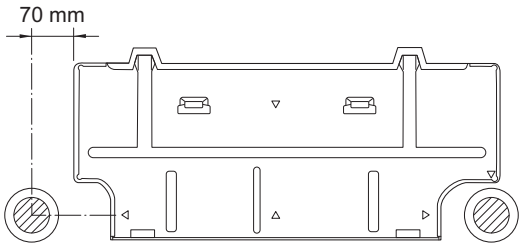

Fig. 2-202

NOTE

In the case of left-rear tubing, use the measurement points from the edge of the rear panel for precise placement of the hose outlet. (Fig. 2-202)

(3) Before making the hole, check carefully that no studs or pipes are directly run behind the spot to be cut.

⚠ CAUTION

Also avoid areas where electrical wiring or conduits are located.
The above precautions are also applicable if tubing goes through the wall in any other location.

(4) Using a sabre saw, key hole saw or hole-cutting drill attachment, cut a hole in the wall. (Fig. 2-203)

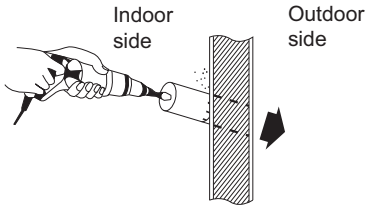

Fig. 2-203

NOTE

Hole should be made at a slight downward slant to the outdoor side.

Table 2-23

Hole Dia. (mm)
S-22MK1E5 / S-28MK1E5 / S-36MK1E5
65

(5) Measure the thickness of the wall from the inside edge to the outside edge and cut PVC pipe at a slight angle 6 mm shorter than the thickness of the wall. (Fig. 2-204)

(6) Place the plastic cover over the end of the pipe (for indoor side only) and insert the pipe in the wall. (Fig. 2-205)

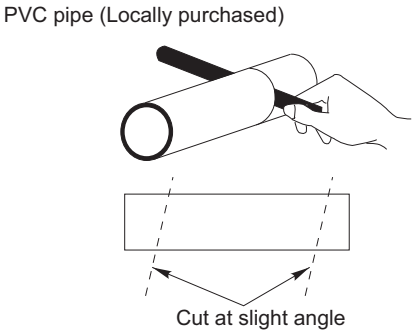

Fig. 2-204

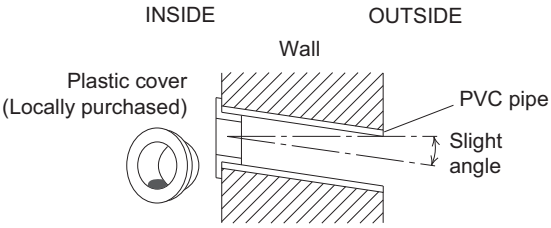

Fig. 2-205

4. Installation Instructions

4-13-67. Install the Rear Panel on the Wall

Be sure to confirm that the wall is strong enough to suspend the unit.

NOTE

Be sure to install the unit within the range of the wall.

If Wooden Wall

(1) Attach the rear panel to the wall with the 8 screws provided. (Fig. 2-206)

If you are not able to line up the holes in the rear panel with the beam locations marked on the wall, use rawl plugs or toggle bolts to go through the holes on the panel or drill 5 mm dia. holes in the panel over the stud locations and then mount the rear panel.

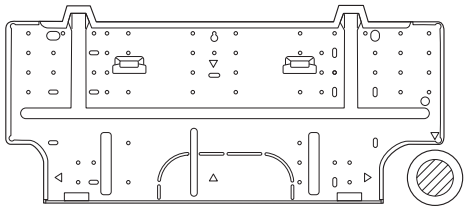

Fig. 2-206

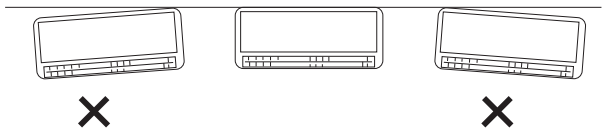

Fig. 2-207

(2) Double check with a carpenter's level or tape measure that the panel is level. This is important to install the unit properly. (Fig. 2-208)

(3) Make sure the panel is flush against the wall. Any space between the wall and unit will cause noise and vibration.

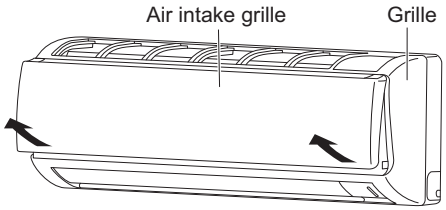

Fig. 2-208

4-13-68. Remove the Grille to Install the Indoor Unit

Basically, these models can be installed and wired without removing the grille. If access to any internal part is needed, follow the steps as given below.

How to remove the grille

(1) Grasp both ends of the air intake grille, and remove it by opening towards the front and pulling towards you. (Fig. 2-208)

(2) Remove the 2 screws. (Fig. 2-209)

(3) Press the 3 tabs at the top of the grille and the 3 tabs on the front face to separate the grille from the frame. (Fig. 2-210)

(4) Pull the grille toward you to remove it.

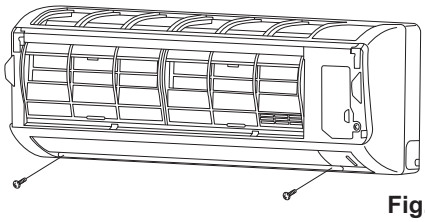

Fig. 2-209

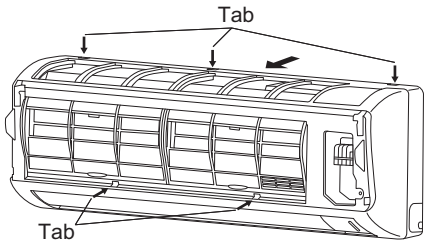

Fig. 2-210

How to replace the grille

(1) When installing the grille, place the bottom of the grille into the frame first. (Fig. 2-211)
Then insert the tabs on the top of the grille and on the front face into the frame.

(2) Make sure that the grille and frame are firmly fitted together by engaging the tabs.

(3) Affix the grille with the 2 previously removed screws. (Fig. 2-209)

(4) Install the air intake grille.

(a) Allow the edge of the air intake grille to slide into the top of the indoor unit, and then insert it all the way inside. (Fig. 2-212)

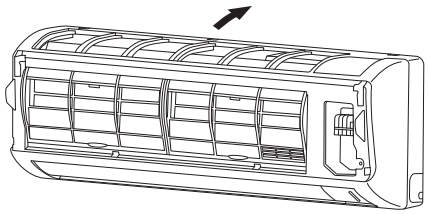

Fig. 2-211

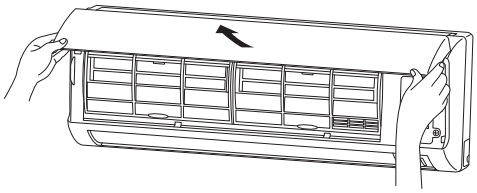

Fig. 2-212

4. Installation Instructions

(b) Press the bottom right and left corners and center of the air intake grille to attach it to the indoor unit. (Fig. 2-213)

NOTE

Attach so that the round pins at the top right and left corners of the air intake grille are inserted into the grooves at the top right and left of the indoor unit.

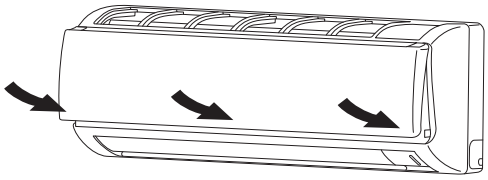

Fig. 2-213

4-13-69. Shape the Indoor Side Tubing

(1) Arrangement of tubing by directions

a) Right or left tubing
Cut out the corner of the right/left frame with a hacksaw or the like. (Figs. 2-214 and 2-215)

b) Right-rear or left-rear tubing
In this case, the corner of the frame need not be cut.

(2) To mount the indoor unit on the rear panel:
Hang the 2 mounting slots of the unit on the upper tabs of the rear panel. (Fig. 2-216)

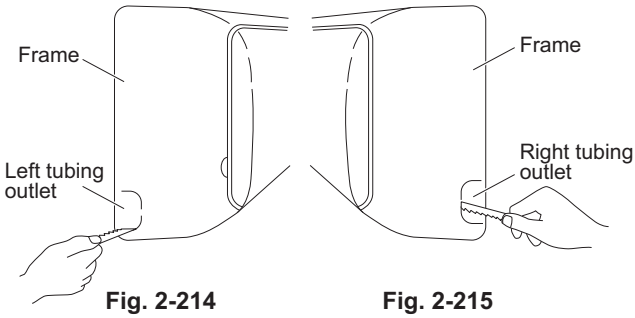

Fig. 2-214 Fig. 2-215

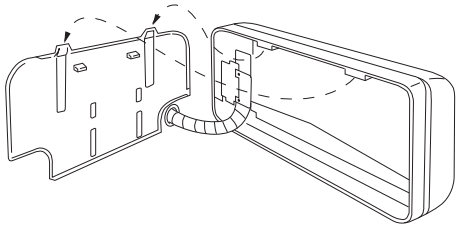

Fig. 2-216

4-13-70. Wiring Instructions

General precautions on wiring

(1) Before wiring, confirm the rated voltage of the unit as shown on its nameplate, then carry out the wiring closely following the wiring diagram.

(2) Provide a power outlet to be used exclusively for each unit, with a power supply disconnect and circuit breaker for overcurrent protection provided in the exclusive line.

(3) To prevent possible hazard due to insulation failure, the unit must be grounded.

(4) Each wiring connection must be done tightly and in accordance with the wiring system diagram. Wrong wiring may cause the unit to misoperate or become damaged.

(5) Do not allow wiring to touch the refrigerant tubing, compressor, or any moving parts of the fan.

(6) Unauthorized changes in the internal wiring can be very dangerous. The manufacturer will accept no responsibility for any damage or misoperation that occurs as a result of such unauthorized changes.

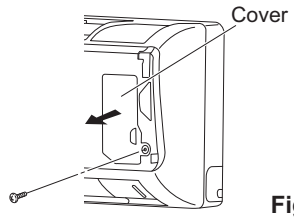

Fig. 2-217

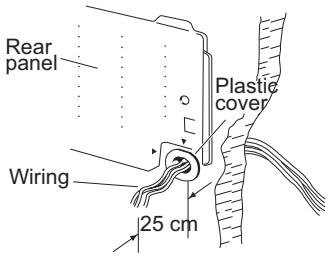

Fig. 2-218

4-13-71. Wiring Instructions for Inter-unit Connections

(1) Grasp both ends of the air intake grille, and remove it by opening toward the front and pulling it toward you.

(2) Remove the screw on the right side cover plate and open the cover. (Fig. 2-217)

(3) Insert the inter-unit wiring into the through-the-wall PVC pipe. Lead the power wiring into the room allowing approx. 25 cm to extend from the wall face. (Fig. 2-218)

(4) Route the inter-unit wiring from the back of the indoor unit and pull it toward the front for connection. (Fig. 2-219)

(5) Connect the inter-unit wiring to the corresponding terminals on the terminal plate (Fig. 2-219) while referring to the wiring diagram.

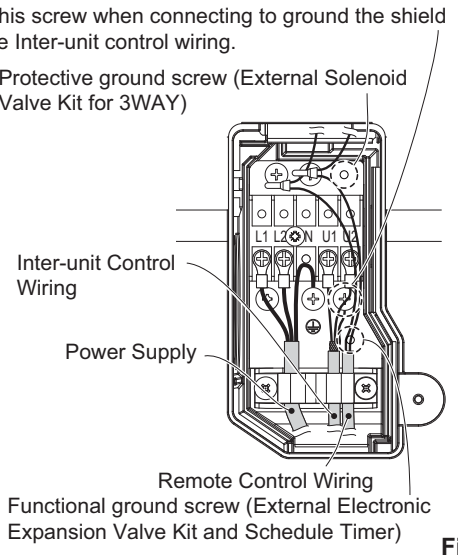

Fig. 2-219

4. Installation Instructions

(6) Be sure to secure the wiring with the provided clamp.

NOTE

When closing the air intake grille, press the bottom right and left corners and center. (Fig. 2-220)

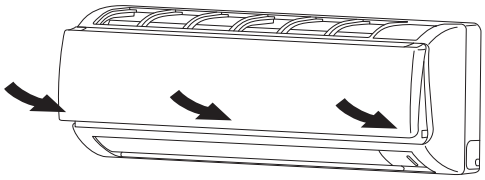

Fig. 2-220

Please refer to “How to replace the grille” for installing the air intake grille.

WARNING

Loose wiring may cause the terminal to overheat or result in unit malfunction. A fire hazard may also exist. Therefore, be sure all wiring is tightly connected.

When connecting each power wire to the corresponding terminal, follow the instructions “How to connect wiring to the terminal” and fasten the wire securely tight with the fixing screw of the terminal plate.

How to connect wiring to the terminal

a) For Indoor Unit

(1) Cut the wire end with a cutting pliers, then strip the insulation to expose the wire about 8 mm. See the label (Fig. 2-221) near the terminal plate.

(2) Using a screwdriver, loosen the terminal screw on the terminal plate.

(3) Insert the wire and tighten the terminal screw completely using a screwdriver.

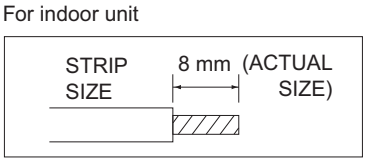

Fig. 2-221

b) For Outdoor Unit

■ **For solid core wiring (or F-cable)**

(1) Cut the wire end with a cutting pliers, then strip the insulation to expose the solid wire about 25 mm. (Fig. 2-222)

(2) Using a screwdriver, remove the terminal screw(s) on the terminal plate.

(3) Using the pliers, bend the solid wire to form a loop suitable for the terminal screw.

(4) Shape the loop wire properly, place it on the terminal plate and fix it securely with the removed terminal screw using a screwdriver.

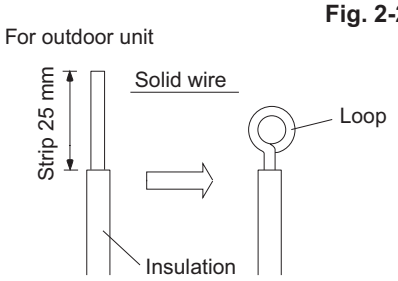

Fig. 2-222

■ **For stranded wiring**

(1) Cut the wire end with a cutting pliers, then strip the insulation to expose the stranded wiring about 10 mm and tightly twist the wire ends. (Figs. 2-223 and 2-224)

(2) Using a screwdriver, remove the terminal screw(s) on the terminal plate.

(3) Using a ring connector fastener or pliers, securely clamp each stripped wire end with a ring connector. (Fig. 2-223)

(4) Place the ring connector wire, and replace and tighten the removed terminal screw using a screwdriver. (Fig. 2-225)

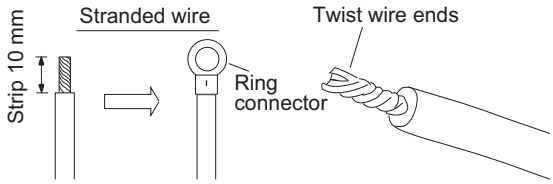

Fig. 2-223 Fig. 2-224

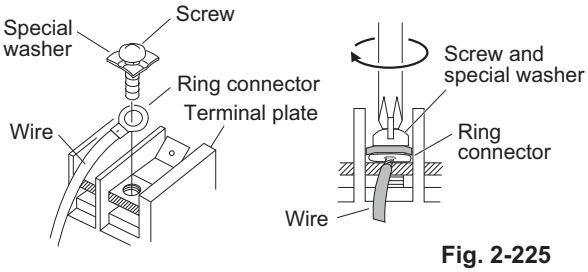

Fig. 2-225

4-13-72. Mounting

(1) To install the indoor unit, mount the indoor unit onto the 2 tabs on the upper part of the rear plate.

(2) Hold down the air discharge outlet and press the lower part of the indoor unit until it clicks to securely fasten to the 2 tabs on the lower part of the rear plate. (Fig. 2-226)

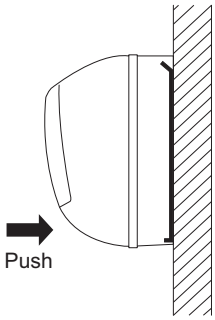

Fig. 2-226

4. Installation Instructions

NOTE

For tubing, choose either the right or left tubing direction and follow the steps below. This work can be made easier by placing padding material (such as styrofoam) at the rear right side of the indoor unit. (Fig. 2-227)

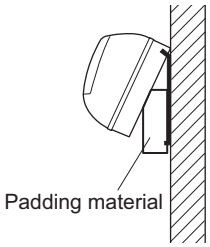

Fig. 2-227

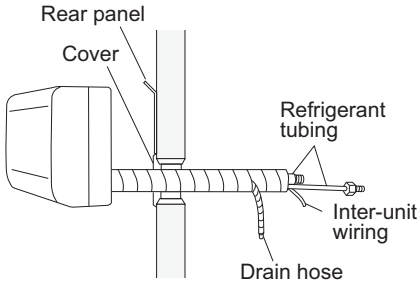

Fig. 2-228

■ Right-side tubing

(1) Shape the refrigerant tubing so that it can easily go into the wall hole. (Fig. 2-228)

(2) Push the wiring, refrigerant tubing, and drain hose through the hole in the wall. Adjust the indoor unit so it is securely seated on the rear panel. (Fig. 2-229)

(3) Carefully bend the tubing (if necessary) to run along the wall in the direction of the outdoor unit and then tape as far as the fittings. The drain hose should come straight down the wall to a point where water runoff won't stain the wall.

(4) Connect the refrigerant tubing to the outdoor unit. (After performing a leak test on the connecting part, insulate it with the tubing insulation.) (Fig. 2-230)

(5) Assemble the refrigerant tubing, drain hose, and inter-unit wiring as shown in Fig. 2-230.

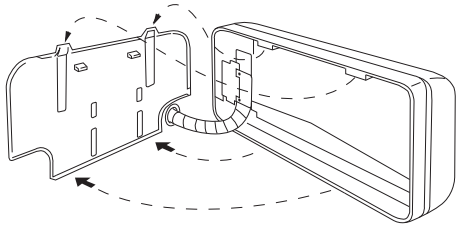

Fig. 2-229

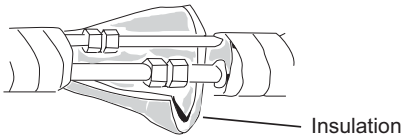

Fig. 2-230

■ Left-side tubing

(1) Lead the tubing and drain hose through the wall, allowing sufficient length for connection. Then bend the tubing using a tube bender to make the attachment. (Fig. 2-231)

(2) Switch the drain hose and drain cap.

Switching drain hose and drain cap

(a) Locate the drain hose and the drain cap. (Fig. 2-232)

(b) Remove the screws fastening the drain hose on the right side, and pull out the drain hose to remove it. (Fig. 2-232)

(c) Apply moderate force to pull off the drain cap on the left side. (If you cannot pull it off by hand, use a long-nose pliers.)

(d) Reattach the drain hose to the left side and the drain cap to the right side. (Fig. 2-233)

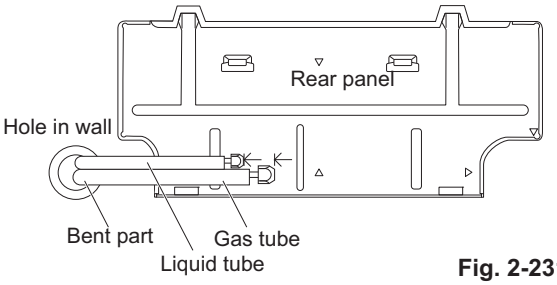

Fig. 2-231

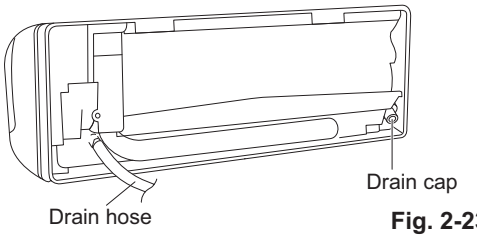

Fig. 2-232

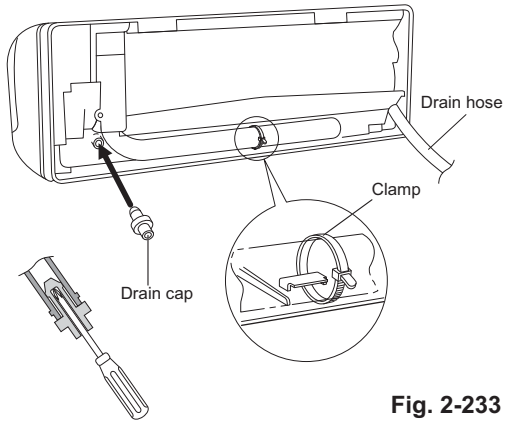

Fig. 2-233

4. Installation Instructions

Drain hose

Slide the drain hose fully onto the drain pan outlet until the drain hose edge is pushed into the insulation. Check that the screw holes in the drain bracket and the drain pan outlet are aligned and securely in contact, then fasten them with the screw. (After attaching the drain hose, check that it is attached securely.) (Fig. 2-234)

Drain cap

Use a Phillips screwdriver to push the drain cap in firmly. (If it is difficult to push in, wet the cap with water first.)

(3) Install the indoor unit on the rear panel.

(4) Connect the tubing and wiring led inside from outdoors.

(5) After completing a leak test, bundle the tubing together with armoring tape and store it inside the tubing storage area at the back of the indoor unit and hold it with clamps. (Fig. 2-235)

To unmount indoor unit

Press the 2 △ marks on the lower part of the indoor unit and unlatch the tabs. Then lift the indoor unit and unmount. (Fig. 2-236)

4-13-73. Drain Hose

a) The drain hose should be slanted downward to the outdoors. (Fig. 2-237)

b) Never allow a trap to form in the course of the hose.

c) If the drain hose will run in the room, insulate the hose with insulation* so that chilled condensation will not damage furniture or floors. (Fig. 2-238)

* Foamed polyethylene or its equivalent is recommended.

⚠ WARNING

Do not supply power to the unit or operate it until all tubing and wiring to the outside unit are completed.

Risk of Electric Shock

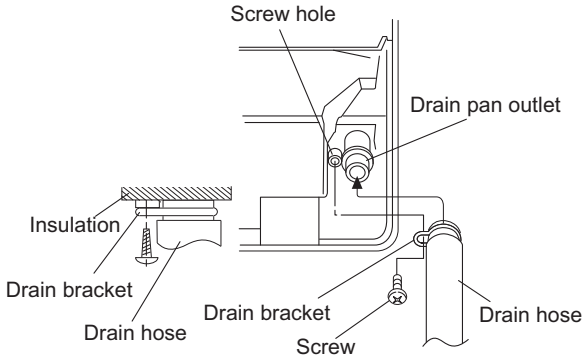

Fig. 2-234

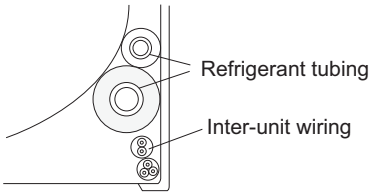

Fig. 2-235

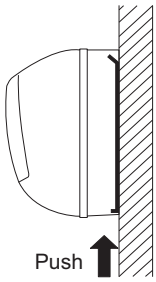

Fig. 2-236

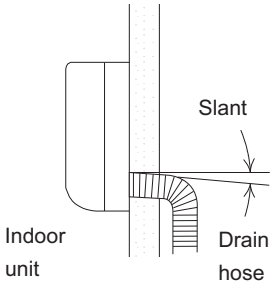

Fig. 2-237

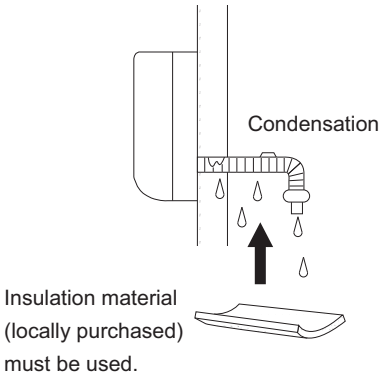

Fig. 2-238

4. Installation Instructions

- **Wall Mounted Type (K1 Type) 45, 56, 73, 106 types**

4-13-74. Remove the Rear Panel from the Unit

(1) Remove and discard the set screw on the rear panel. (Fig. 2-239)

(2) Press the 2 △ marks on the frame cover and disengage the stationary tabs from the frame. (Fig. 2-240)

(3) Remove the rear panel by grasping the sections shown in Fig. 2-241 and pulling it in the direction shown by the arrow.

NOTE

Tubing can be extended in 6 directions as shown in Fig. 2-243. Select the direction you need providing the shortest run to the outside unit.

- When left tubing is to be done, switch the drain hose and drain cap. (For details, refer to “Switching drain hose and drain cap”.)

4-13-75. Make a Hole

(1) Place the rear panel from the indoor unit on the wall at the location selected. Make sure the panel is horizontal, using a carpenter’s level or tape measure to measure down from the ceiling. Wait until after cutting the hole before attaching the rear panel to the wall.

(2) Determine which side of the unit you should make the hole for tubing and wiring. (Fig. 2-244)

NOTE

In the case of left-rear tubing, use the measurement points 158 mm from the marked position on the rear panel for precise placement of the hose outlet. (Fig. 2-244)

(3) Before making the hole, check carefully that no studs or pipes are directly run behind the spot to be cut.

CAUTION **Also avoid areas where electrical wiring or conduits are located.**

The above precautions are also applicable if tubing goes through the wall in any other location.

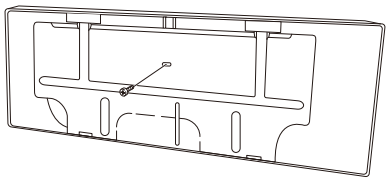

Fig. 2-239

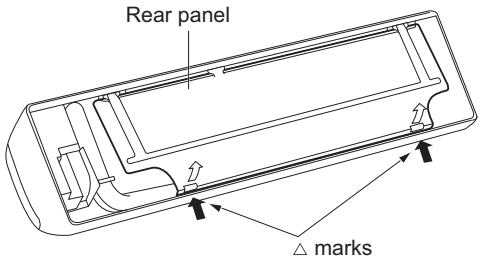

Fig. 2-240

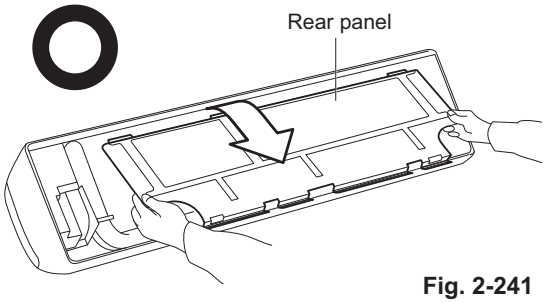

Fig. 2-241

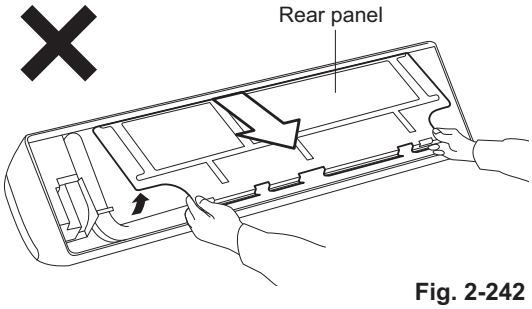

Fig. 2-242

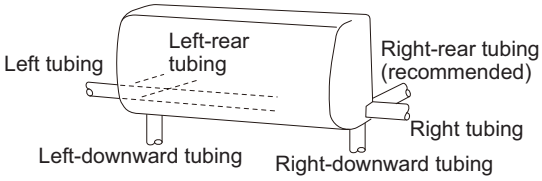

Fig. 2-243

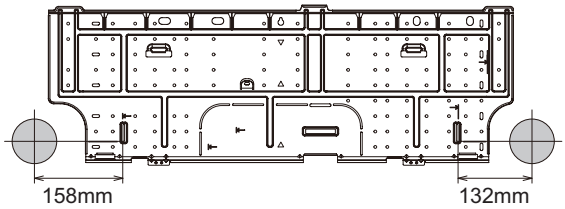

Unit: mm

Fig. 2-244

4. Installation Instructions

(4) Using a sabre saw, key hole saw or hole-cutting drill attachment, cut a hole in the wall. See Table 2-24 and Fig. 2-245.

Table 2-24

Hole Dia.
80 mm

(5) Measure the thickness of the wall from the inside edge to the outside edge and cut PVC pipe at a slight angle 6 mm shorter than the thickness of the wall. (Fig. 2-246)

(6) Place the plastic cover over the end of the pipe (for indoor side only) and insert the pipe in the wall. (Fig. 2-247)

4-13-76. Install the Rear Panel on the Wall

Be sure to confirm that the wall is strong enough to suspend the unit.

There are a number of screw holes on the rear panel.
Using the 8 screw holes with ⇦ mark is recommended to attach the rear panel securely to the wall.

NOTE

Be sure to install the unit within the range of the wall.

If Wooden Wall

(1) Attach the rear panel to the wall with the 8 screws provided. (Fig. 2-248)
If you are not able to line up the holes in the rear panel with the beam locations marked on the wall, use rawl plugs or toggle bolts to go through the holes on the panel or drill 5 mm dia. holes in the panel over the stud locations and then mount the rear panel.

(2) Double check with a carpenter's level or tape measure that the panel is level. This is important to install the unit properly. (Fig. 2-249)

(3) Make sure the panel is flush against the wall. Any space between the wall and unit will cause noise and vibration.

NOTE

Hole should be made at a slight downward slant to the outdoor side.

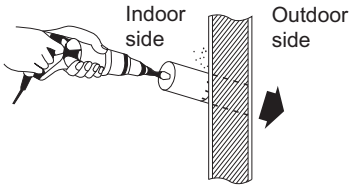

Fig. 2-245

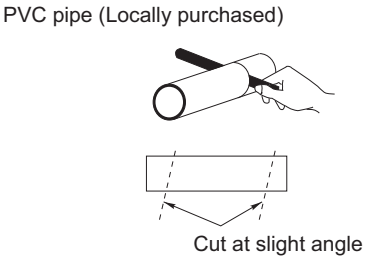

Fig. 2-246

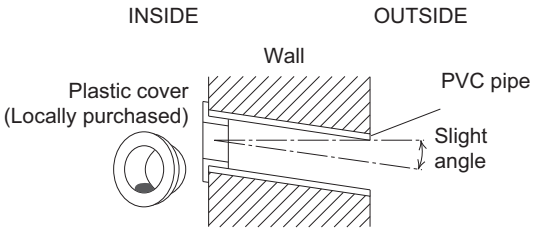

Fig. 2-247

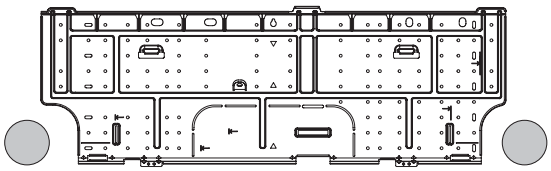

Fig. 2-248

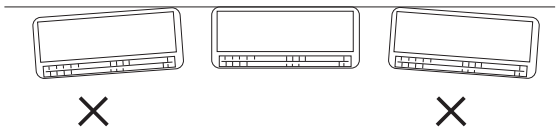

Fig. 2-249

4. Installation Instructions

4-13-77. Removing and Installing the Grille

Basically, these models can be installed and wired without removing the grille. If access to any internal part is needed, follow the steps as given below.

How to remove the grille

(1) Open the front panel until it is nearly horizontal, grasp the sections near the front panel arms on both sides, and then remove the panel by pushing the arms towards the outside while pulling the panel towards you.
If the front panel is difficult to remove, grasp both ends of it and lift it up slightly. Move it to the left and disengage the left arm, then move it to the right and disengage the right arm. (Fig. 2-250)

(2) Lift the anti-mold filter up slightly to disengage it from the protrusions on the unit, and then pull downward to remove the filter from the unit. (Fig. 2-250)

(3) Remove the 3 screws from the front of the unit and remove the screw covers on the bottom surface. Then remove the 2 screws. (Fig. 2-251)

(4) Remove the screw on the right side cover plate and remove the cover. (Fig. 2-251)

(5) Remove the lower flap by disengaging 4 pins of the lower flap in order. (Figs. 2-252 and 2-253)
(The flap is so flexible that it can be easily removed.)

(6) Lift up the grille in the direction shown by the arrow and pull the grille towards you to remove it. (Fig. 2-254)

How to replace the grille

(1) While aligning the top edge of the grille with the frame, move the grille horizontally and insert the top and bottom into the frame.

(2) Press the grille firmly with your hand to ensure no gap exists between the frame and grille.

(3) Tighten the 6 screws. And fix the removed covers in place.

(4) Grasp the sections near the front panel arms on both sides, and hold the front panel so that it is nearly horizontal. Push the arm shafts towards the outside so that they come into contact with the top of the indentations on the right and left sides of the air conditioner. Then push firmly until the arm shafts click into place. (Fig. 2-255)

(5) Remount the lower flap.
(In remounting the flap, it cannot be turned end for end because the right and left pins of the flap differ in form. (Fig. 2-253))

(6) Insert the top of the anti-mold filter, and then secure the bottom of the filter with the protrusions on the unit.

(7) When closing the front panel, push the central part of the front panel first and then press the bottom right and left corners in place until you feel a click. (Fig. 2-256)

NOTE

Check that no gap exists between the frame and the grille.

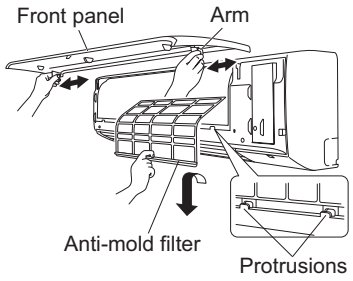

Fig. 2-250

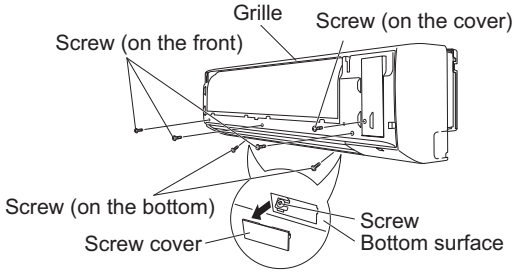

Fig. 2-251

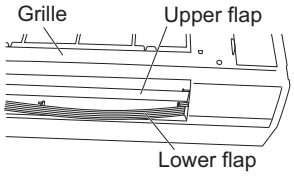

Fig. 2-252

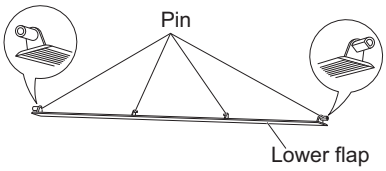

Fig. 2-253

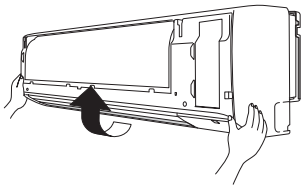

Fig. 2-254

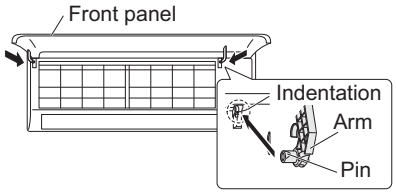

Fig. 2-255

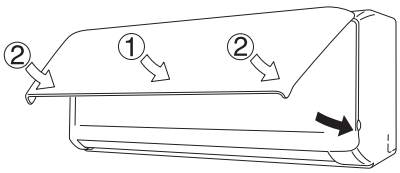

Fig. 2-256

4. Installation Instructions

4-13-78. Shape the Indoor Side Tubing

(1) Arrangement of tubing by direction

a) Right or left tubing

Cut out the corner of the right/left frame with a hacksaw or the like. (Figs. 2-257 and 2-258)

b) Right-rear or left-rear tubing

In this case, the corner of the frame need not be cut.

(2) To mount the indoor unit on the rear panel:

Hang the 3 mounting slots of the unit on the upper tabs of the rear panel. (Fig. 2-259)

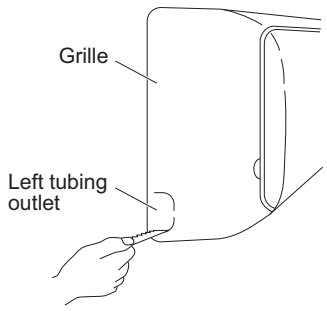

Fig. 2-257

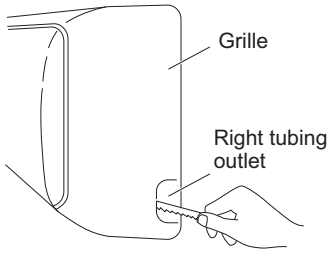

Fig. 2-258

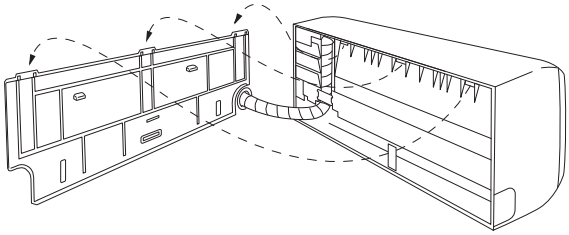

Fig. 2-259

4-13-79. Wiring Instructions

General precautions on wiring

(1) Before wiring, confirm the rated voltage of the unit as shown on its nameplate, then carry out the wiring closely following the wiring diagram.

(2) Provide a power outlet to be used exclusively for each unit, with a power supply disconnect and circuit breaker for overcurrent protection provided in the exclusive line.

(3) To prevent possible hazards due to insulation failure, the unit must be grounded.

(4) Each wiring connection must be done tightly and in accordance with the wiring system diagram. Wrong wiring may cause the unit to misoperate or become damaged.

(5) Do not allow wiring to touch the refrigerant tubing, compressor, or any moving parts of the fan.

(6) Unauthorized changes in the internal wiring can be very dangerous. The manufacturer will accept no responsibility for any damage or misoperation that occurs as a result of such unauthorized changes.

4-13-80. Mounting

(1) To install the indoor unit, mount the indoor unit onto the 3 tabs on the upper part of the rear plate.

(2) Hold down the air discharge outlet and press the lower part of the indoor unit until it clicks to securely fasten to the 2 tabs on the lower part of the rear plate. (Fig. 2-260)

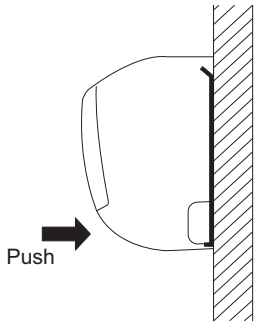

Fig. 2-260

NOTE

For tubing, choose either the right or left tubing direction and follow the steps below. Also, extend the support on the back of the indoor unit as a stand to make your work easier. (Fig. 2-261)

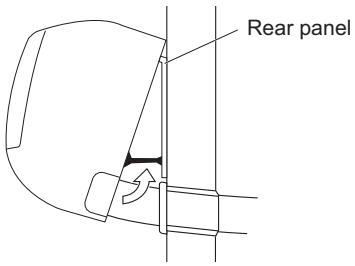

Fig. 2-261

4. Installation Instructions

■ Right-side tubing

(1) Shape the refrigerant tubing so that it can easily go into the wall hole. (Fig. 2-262)

(2) Push the wiring, refrigerant tubing, and drain hose through the hole in the wall. Adjust the indoor unit so it is securely seated on the rear panel. (Fig. 2-263)

(3) Carefully bend the tubing (if necessary) to run along the wall in the direction of the outdoor unit and then tape as far as the fittings. The drain hose should come straight down the wall to a point where water runoff won't stain the wall.

(4) Connect the refrigerant tubing to the outdoor unit. (After performing a leak test on the connecting part, insulate it with the tubing insulation. (Fig. 2-264)).

(5) Assemble the refrigerant tubing, drain hose, and conduit (including inter-unit wiring) as shown in Fig. 2-265.

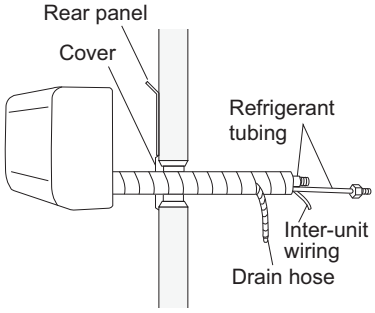

Fig. 2-262

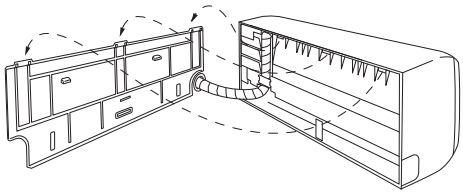

Fig. 2-263

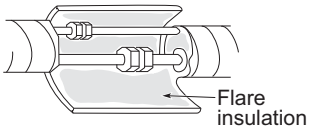

Fig. 2-264

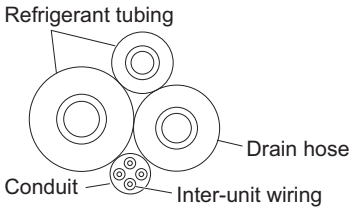

Fig. 2-265

■ Left-side tubing

(1) Lead the tubing and drain hose through the wall, allowing sufficient length for connection. Then bend the tubing using a tube bender to make the attachment. (Fig. 2-266)

(2) Switch the drain hose and drain cap.

Switching drain hose and drain cap

(a) Locate the drain hose and the drain cap. (Fig. 2-267)

(b) Remove the screw fastening the drain hose on the right side, and pull out the drain hose to remove it. (Fig. 2-267)

(c) Apply moderate force to pull off the drain cap on the left side. (If you cannot pull it off by hand, use a long-nose pliers.)

(d) Reattach the drain hose to the left side and the drain cap to the right side. (Fig. 2-268)

Drain hose

Slide the drain hose fully onto the drain pan outlet. (It will be easy to slide when water is added.) Check that the screw holes in the drain bracket and the drain pan outlet are aligned and securely in contact, then fasten them with the screw. (After attaching the drain hose, check that it is attached securely.) (Fig. 2-269)

Drain cap

Use a Phillips head screwdriver to push the drain cap in firmly. (If it is difficult to push in, wet the cap with water first.)

(3) Install the indoor unit on the rear panel.

(4) Connect the tubing and wiring led inside from outdoors.

(5) After completing a leak test, bundle the tubing together with armoring tape and store it inside the tubing storage area at the back of the indoor unit and hold it with clamps. (Figs. 2-268 and 2-270)

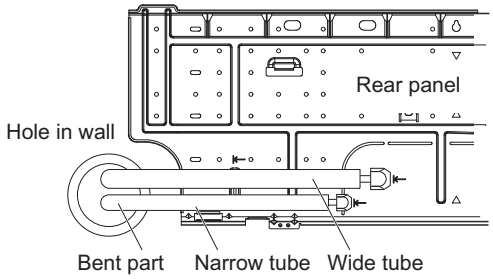

Fig. 2-266

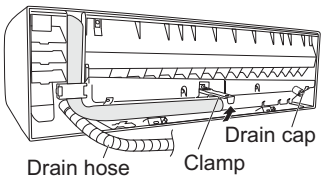

Fig. 2-267

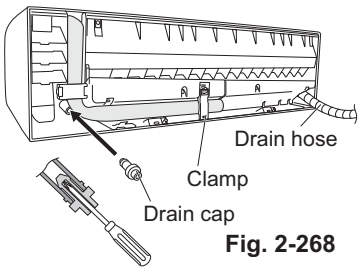

Fig. 2-268

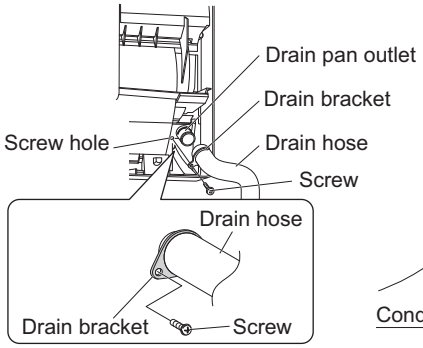

Fig. 2-269

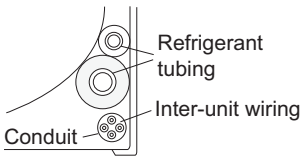

Fig. 2-270

4. Installation Instructions

To unmount indoor unit

(1) Remove the screw cover on the bottom surface. (Fig. 2-272)

(2) Fasten the frame to the rear panel using the 2 supplied tapping screws 4 x 10 mm. (Fig. 2-272)

(3) Press the 2 △ marks on the lower part of the indoor unit and unlatch the tabs. Then lift the indoor unit and unmount. (Fig. 2-271)

NOTE

Under normal conditions, the installation design calls for a less than 2 mm gap between the air conditioner unit and the wall. Confirm that the gap is appropriate (less than 2 mm).

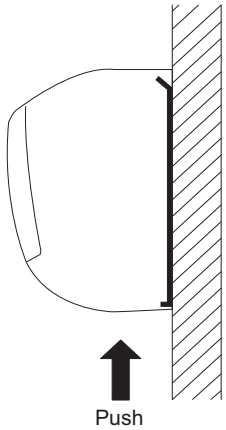

Fig. 2-271

4-13-81. Drain Hose

a) The drain hose should be slanted downward to the outdoors. (Fig. 2-273)

b) Never form a trap in the course of the hose.

c) If the drain hose will run in the room, insulate the hose with insulation* so that chilled condensation will not damage furniture or floors. (Fig. 2-274)
*Foamed polyethylene or its equivalent is recommended.

WARNING **Do not supply power to the unit or operate it until all tubing and wiring to the outside unit are completed.**

Risk of Electric Shock

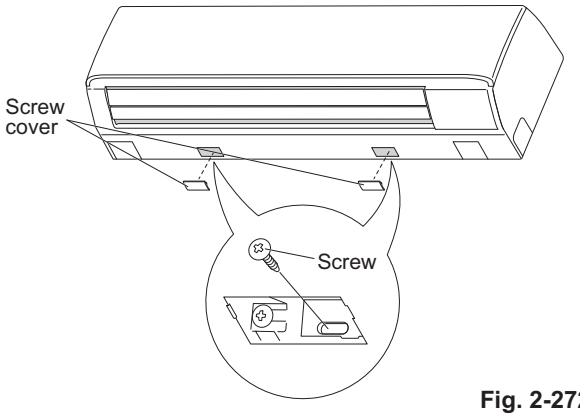

Fig. 2-272

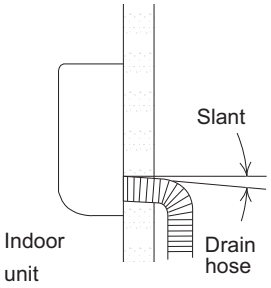

Fig. 2-273

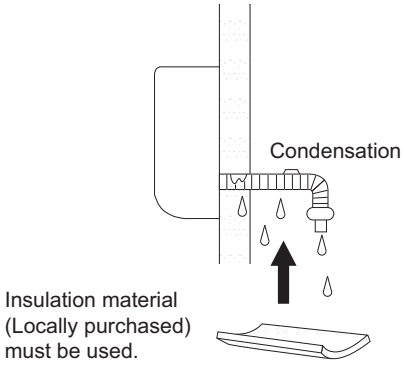

Fig. 2-274

4. Installation Instructions

● Wall Mounted Type (K2 Type)

4-13-82. Starting the Installation

(1) Remove the rear panel.

NOTE

Tubing can be extended in 6 directions as shown in Fig. 2-275. Select the direction you need providing the shortest run to the outside unit.

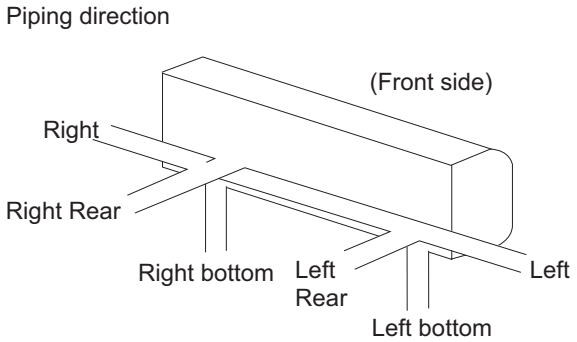

Fig. 2-275

4-13-83. How to Fix Installation Plate

The mounting wall should be strong and solid enough to withstand the unit's vibration.

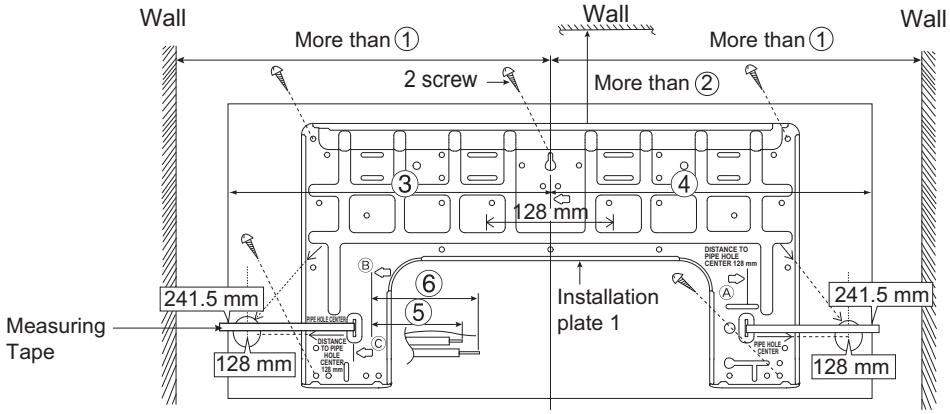

Fig. 2-276

unit : mm

Model	Dimension					
	①	②	③	④	⑤	⑥
S-22MK** S-28MK** S-36MK**	540	82	439	432	43	95

- The center of installation plate should be at more than ① at right and left of the wall.
- The distance from installation plate edge to ceiling should be more than ②.
- From installation plate center to unit's left side is ③.
- From installation plate center to unit's right side is ④.
- For left side piping, piping connection for liquid should be about ⑤ from this line.
- For left side piping, piping connection for gas should be about ⑥ from this line.

(1) Mount the installation plate on the wall with 5 screws or more (at least 5 screws).
(If mounting the unit on the concrete wall, consider using anchor bolts.)
- Always mount the installation plate horizontally by aligning the marking-off line with the thread and using a level gauge.

(2) Drill the piping plate hole with ø70 mm hole-core drill.
- Putting measuring tape at position as shown in the diagram above.
  The hole center is obtained by measuring the distance namely 128 mm for left and right hole respectively.
  Another method is intersection point of arrow mark extension.
  The meeting point of the extension arrow mark is the hole center position.
- Drill the piping hole at either the right or the left and the hole should be slightly slanting to the outdoor side.
  (Refer to Section 4-13-84. "To Drill a Hole in the Wall and Install a Piping sleeve".)

4. Installation Instructions

(3) Double check with a carpenter's level or tape measure that the panel is level.
This is important to install the unit properly. (Fig. 2-277)

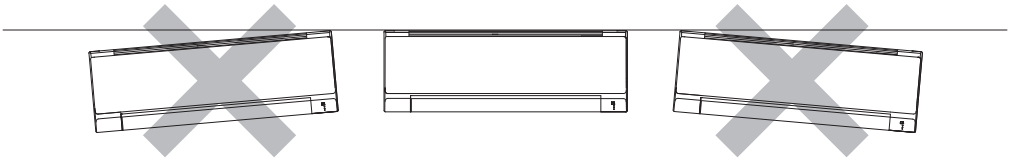

Fig. 2-277

CAUTION

Also avoid areas where electrical wiring or conduits are located.
The above precautions are also applicable if tubing goes through the wall in any other location.

(4) Using a sabre saw, keyhole saw or hole-cutting drill attachment, cut a hole in the wall. (Fig. 2-278)

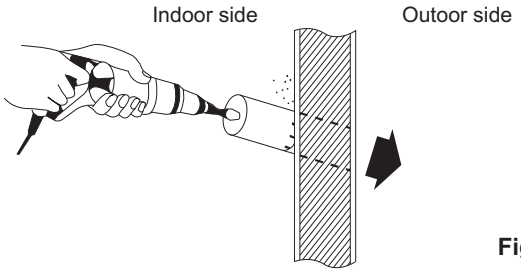

Hole Dia. (mm)
70

Fig. 2-278

NOTE
Hole should be made at a slight downward slant to the outdoor side.

4-13-84. To Drill a Hole in the Wall and Install a Piping sleeve

(1) Insert the piping sleeve to the hole.

(2) Fix the bushing to the sleeve.

(3) Cut the sleeve until it extrudes about 15 mm from the wall.

CAUTION

When the wall is hollow, please be sure to use the Piping sleeve assembly to prevent dangers caused by mice biting the connection cable.

(4) Finish by sealing the sleeve with putty or caulking compound at the final stage.

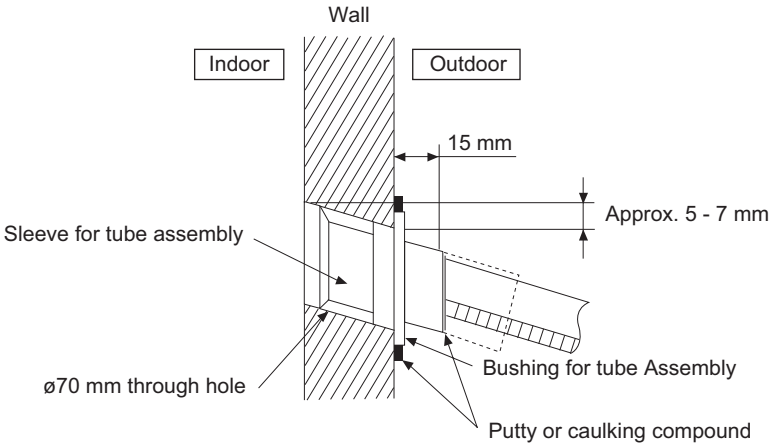

Fig. 2-279

4. Installation Instructions

4-13-85 Install the Rear Panel on the Wall

Be sure to confirm that the wall is strong enough to suspend the unit.

(1) Make sure the panel is flush against the wall.
Any space between the wall and unit will cause noise and vibration.

4-13-86. How to take out Front Grille

Please follow the steps below to take out front grille if necessary such as when servicing.

(1) Set the vertical airflow direction louvers to the horizontal position.

(2) Remove the 2 caps on the front grille as shown in the illustration below, and then remove the 2 mounting screws.

(3) Pull the lower section of the front grille towards you to remove the front grille.

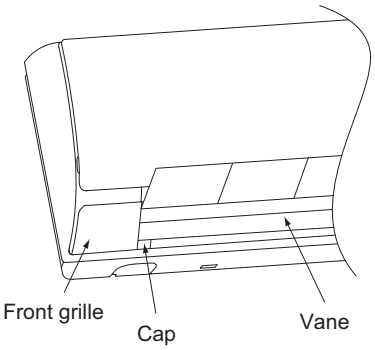

Fig. 2-280

When reinstalling the front grille, first set the vertical airflow direction louver to the horizontal position and then carry out above steps (2) - (3) in the reverse order.

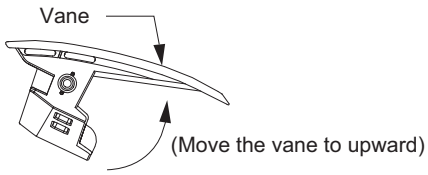

Fig. 2-281

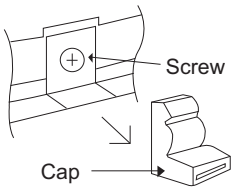

Fig. 2-282

4-13-87. Indoor Unit Installation

- Do not turn over the unit without its shock absorber during pull out the piping.
  It may cause intake grille damage.
- Use shock absorber during pull out the piping to protect the intake grille from damage.

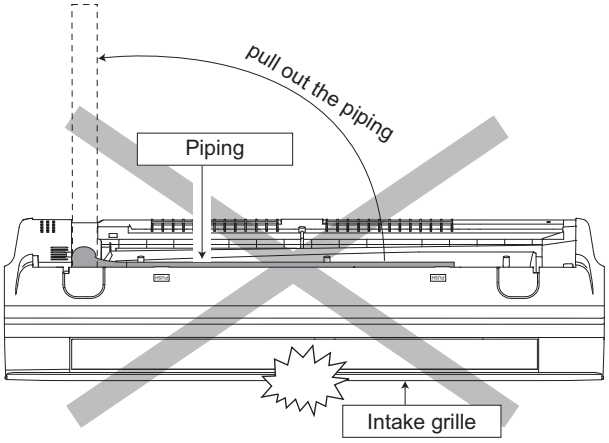

Fig. 2-283

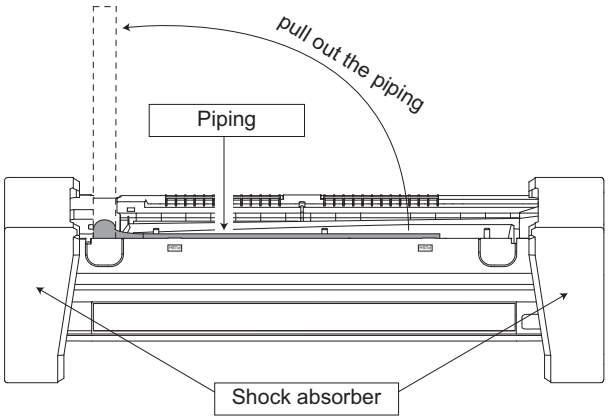

Fig. 2-284

(1) For the Right Rear Piping

Step 1	Pull out the Indoor piping
↓	
Step 2	Install the Indoor Unit
↓	
Step 3	Secure the Indoor Unit
↓	
Step 4	Insert the power supply cord and connection cable

- Insert the cables from bottom of the unit through the control board hole until terminal board area.

Right Rear piping

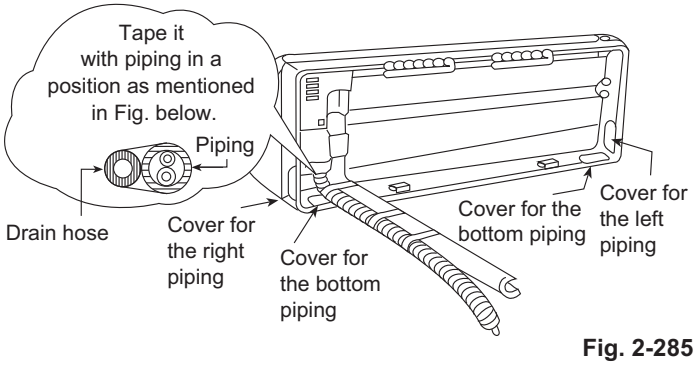

Fig. 2-285

4. Installation Instructions

How to keep the cover

In case of the cover is cut, keep the cover at the rear of chassis as shown in the illustration for future reinstallation.
(Left, right and 2 bottom covers for piping.)

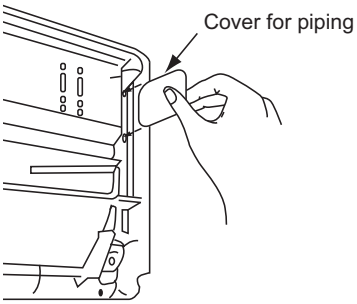

Fig. 2-286

(2) For the Right and Right Bottom Piping

Step 1	Pull out the Indoor piping
↓	
Step 2	Install the Indoor Unit
↓	
Step 3	Insert the power supply cord and connection cable
↓	• Insert the cables from bottom of the unit through the control board hole until terminal board area.
Step 4	Secure the Indoor Unit

Right and Right Bottom piping

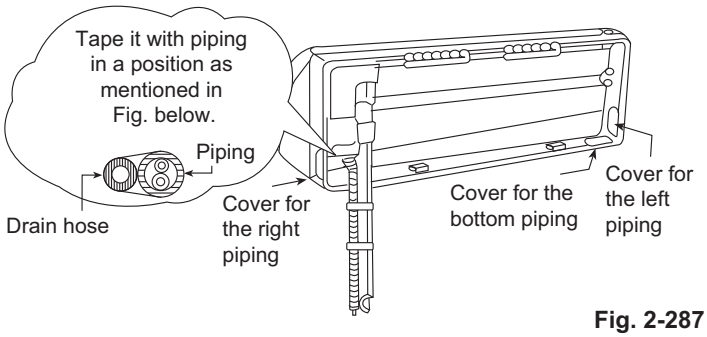

Fig. 2-287

(3) For the Embedded Piping

Step 1	Replace the drain hose
↓	
Step 2	Bend the embedded piping
↓	• Use a spring bender or equivalent to bend the piping so that the piping is not crushed.
Step 3	Pull the connection cable into Indoor Unit
↓	• The power supply cord and indoor unit and outdoor unit connection cable can be connected without removing the front grille.
Step 4	Cut and flare the embedded piping
↓	• When determining the dimensions of the piping, slide the unit all the way to the left on the installation plate.
Step 5	Install the Indoor Unit
↓	
Step 6	Connect the piping
↓	
Step 7	Insulate and finish the piping
↓	
Step 8	Secure the Indoor Unit

4. Installation Instructions

Install the indoor unit

Hook the indoor unit onto the upper portion of installation plate. (Engage the indoor unit with the upper edge of the installation plate). Ensure the hooks are properly seated on the installation plate by moving it in left and right.

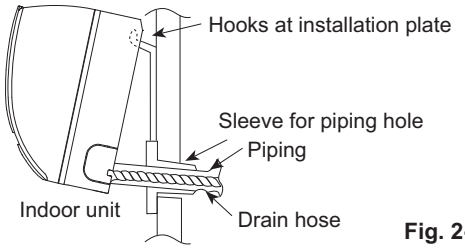

Fig. 2-288

Secure the Indoor Unit

Press the lower left and right side of the unit against the installation plate until hooks engages with their slot (sound click).

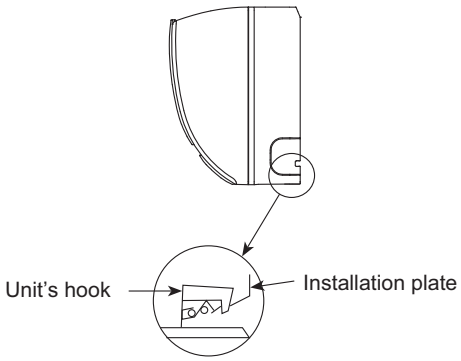

Fig. 2-289

Insert the connection cable

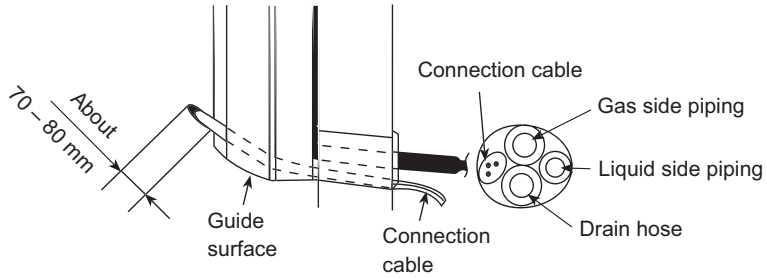

Fig. 2-290

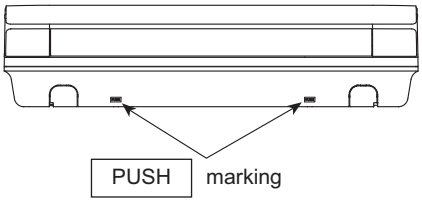

Fig. 2-291

To take out the unit, push the PUSH marking at the bottom unit, and pull it slightly towards you to disengage the hooks from the unit.

(This can be used for left rear piping and bottom piping also.)

4. Installation Instructions

4-13-88. Replace the Drain Hose

(1) Rear view for left piping installation

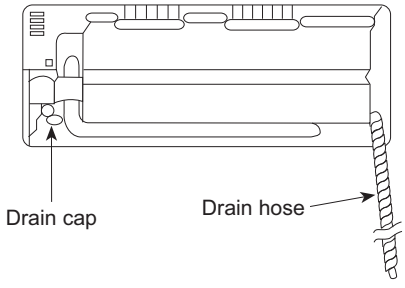

Fig. 2-292

(2) Adjust the piping slightly downwards

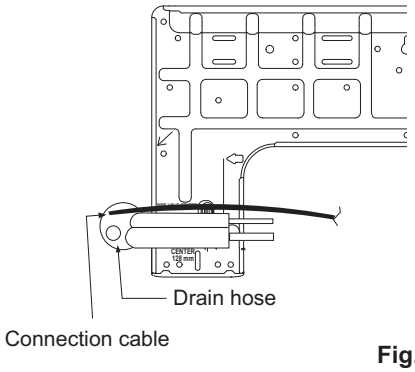

Fig. 2-293

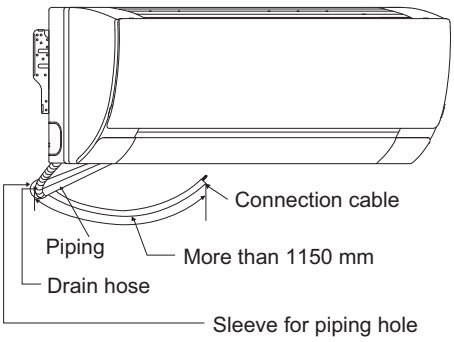

Fig. 2-294

(3) How to pull the piping and drain hose out, in case of the embedded piping.

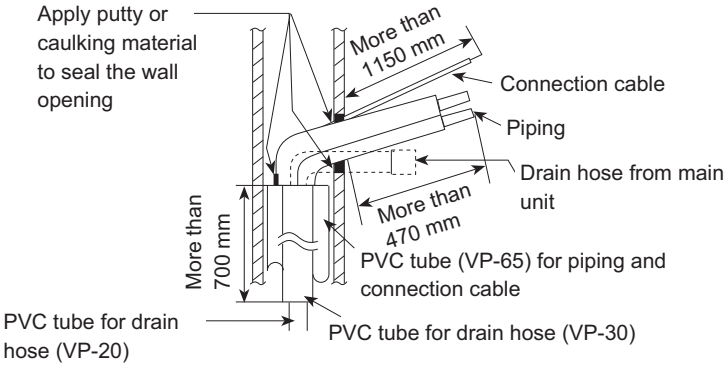

Fig. 2-295

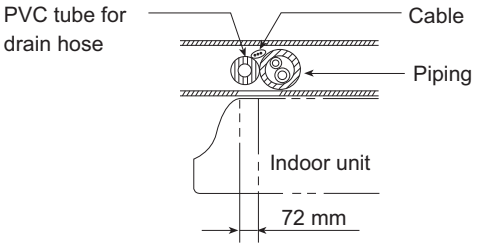

Fig. 2-296

(4) In case of left piping how to insert the connection cable and drain hose.

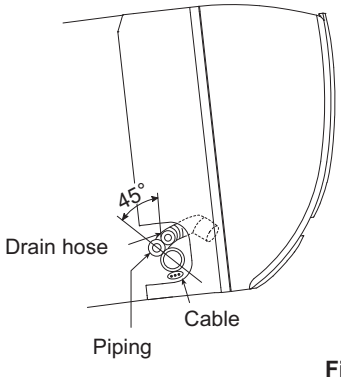

Fig. 2-297

NOTE

Attention not to bend up drain hose

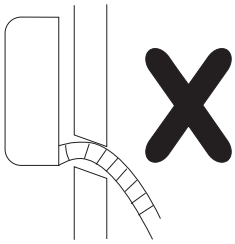

Fig. 2-298

(For the right piping, follow the same procedure)

4. Installation Instructions

4-13-89. Check the Drainage

- Open front panel and remove air filters.
  (Drainage checking can be carried out without removing the front grille.)
- Pour a glass of water into the drain tray-styrofoam.
- Ensure that water flows out from drain hose of the indoor unit.

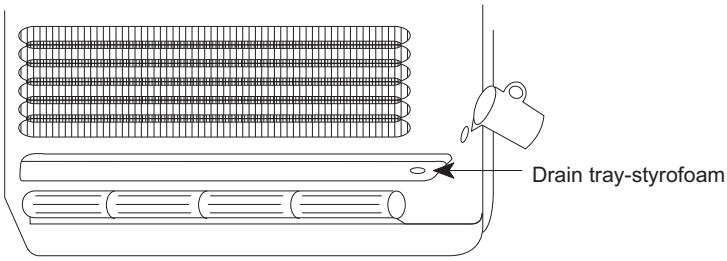

Fig. 2-299

4. Installation Instructions

- **Floor Standing Type (P1 Type)**
  Concealed Floor Standing Type (R1 Type)

4-13-90. Required Minimum Space for Installation and Service

Install the unit where cooled or heated air from the unit can circulate well in the room. Do not put obstacles which may obstruct the air flow in front of the air intake and outlet grilles.

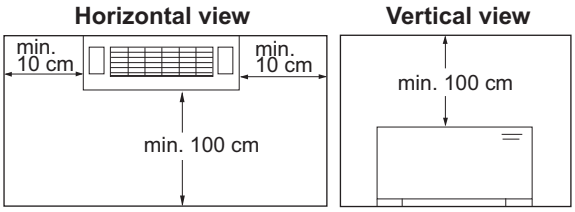

Fig. 2-300

NOTE

Ensure there is adequate space for maintenance of the electrical component box, air filter, and refrigerant tubes.

4-13-91. Dimensions and Part Names
Floor Standing Type (P1 Type)

① 4-ø12 holes (for fastening the indoor unit to the floor with screws)
② Air filter
③ Refrigerant connection outlet (liquid tube)
④ Refrigerant connection outlet (gas tube)
⑤ Level adjusting bolt
⑥ Drain outlet (20 A)
⑦ Power cord outlet (downward, rear)
⑧ Refrigerant tubing outlet (downward, rear)
⑨ Location for mounting the remote controller (remote controller can be attached within the room)

Table 2-25 Unit: mm

Type \ Length	A	B	C	Liquid tube	Gas tube
22, 28, 36	1065	665	632	ø6.35	ø12.7
45, 56	1380	980	947		
73				ø9.52	ø15.88

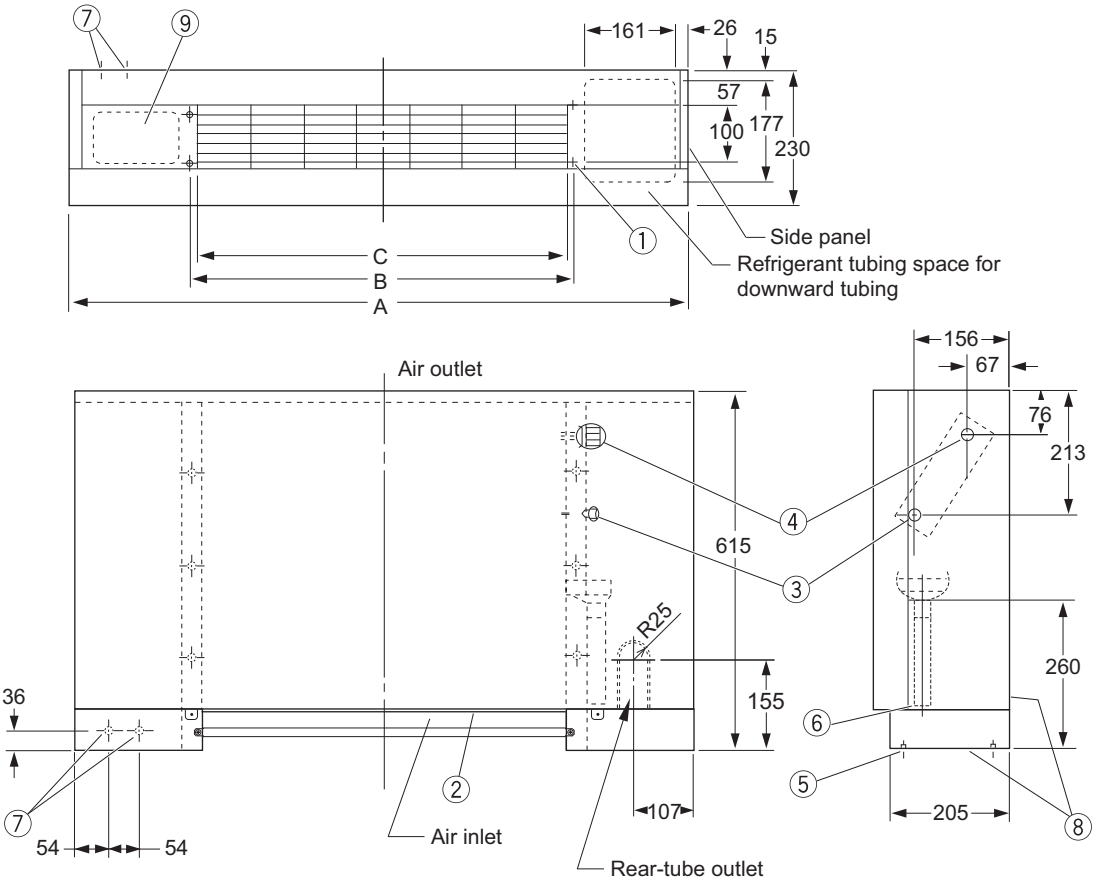

Unit: mm

Fig. 2-301

4. Installation Instructions

Concealed Floor Standing Type (R1 Type)

① 4-ø12 holes (for fastening the indoor unit to the floor with screws)
② Air filter
③ Refrigerant connection outlet (liquid tube)
④ Refrigerant connection outlet (gas tube)
⑤ Level adjusting bolt
⑥ Drain outlet (20A)
⑦ Flange for air-outlet duct

Table 2-26 Unit: mm

Type \ Length	A	B	C	D	E	F	Liquid tube	Gas tube
22, 28, 36	904	692	672	665	500	86	ø6.35	ø12.7
45, 56	1219	1007	1002	980	900	51		
73							ø9.52	ø15.88

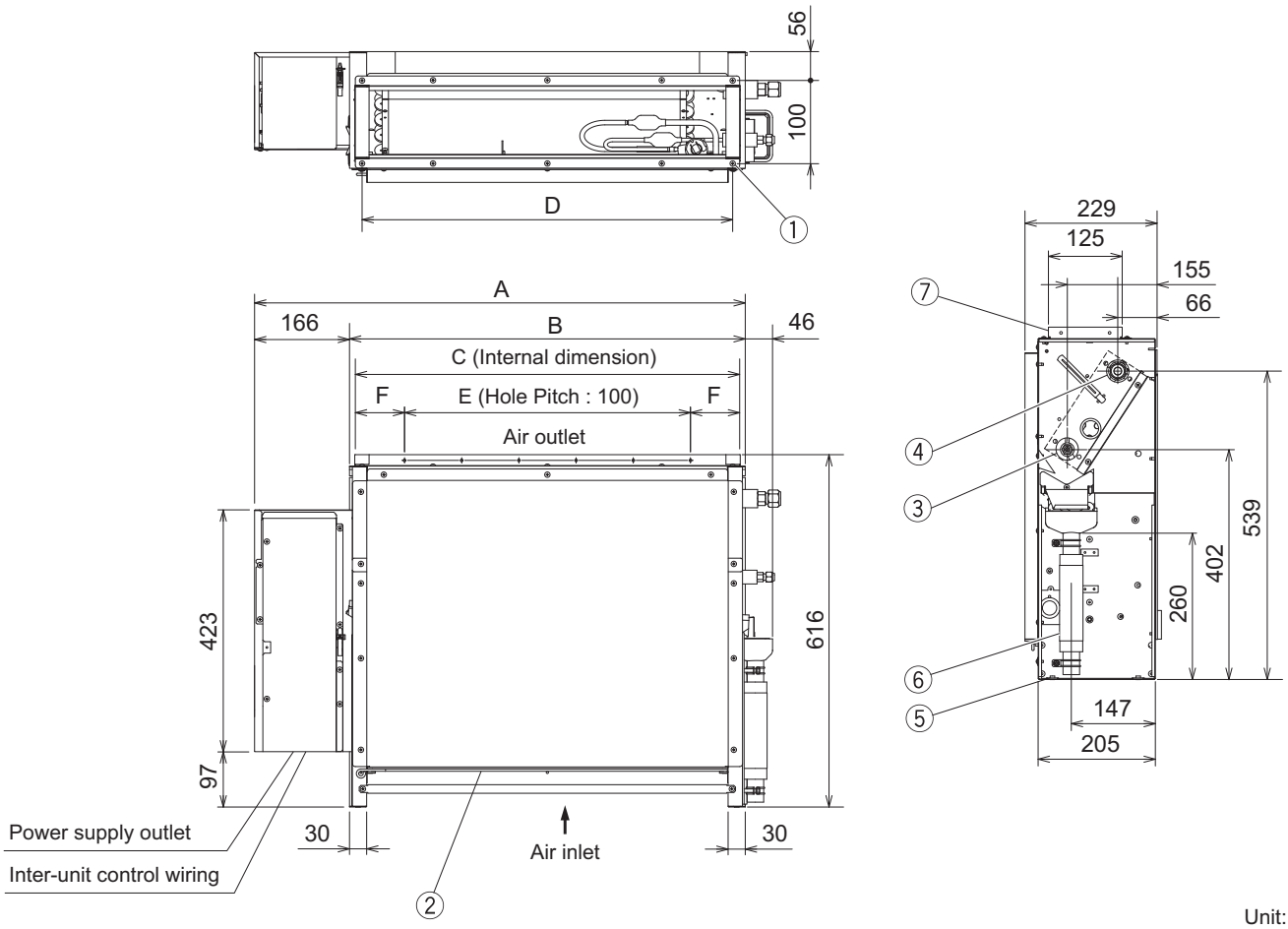

Unit: mm

Fig. 2-302

NOTE

Make an opening in the housing of the unit so that maintenance service can be performed on the electrical component box, air filter, refrigerant tubing connection, and drain pipe.

4. Installation Instructions

4-13-92. Removing and Attaching the Front Panel (Floor Standing Type)

NOTE

A dew-prevention heater is secured behind the front panel. When removing or attaching the panel, take care not to damage the lead wire to the heater.

How to remove the front panel

(1) Remove the 2 screws at the lower part of the front panel.
(2) Holding **A** at the upper right of the unit, push up **B** at the lower right of the panel. The right side of the front panel is removed. Then remove the left side of the front panel following the same procedure.
(3) Disengage the lead wire connector (2P red) for the dew-prevention heater.
(4) Remove the string connecting the front panel of the unit by unhooking it from the fixture attached to the panel.

How to attach the front panel

(1) Hook the string to the fixture of the front panel.
(2) Connect the lead wire connector.
(3) Align the slots at the lower part of the front panel to the tabs at the lower part of the indoor unit and put the upper trim tab of the front panel on the groove of the unit. Then press down the panel.
(4) Insert the 2 screws at the lower part of the front panel.

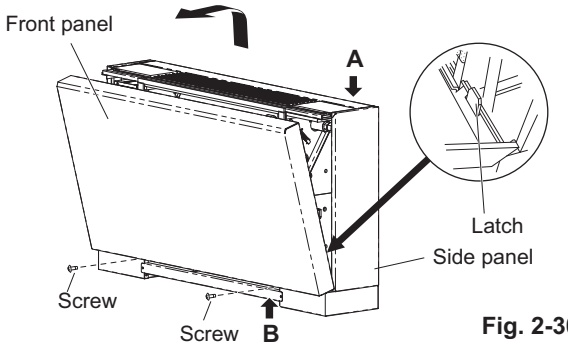

Fig. 2-303

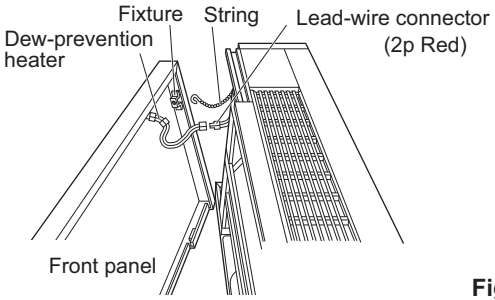

Fig. 2-304

4-13-93. Installing the Refrigerant Tubing

(1) When connecting the gas tube use the supplied tubing.
(2) Tubes can be extended in 2 directions: downward and at rear.

For Floor Standing type

- When a rear tube is required, it can run through the rear-tube outlet of the rear panel.
- When a downward tube is required, refer to the opening dimensions shown in Fig. 2-305.

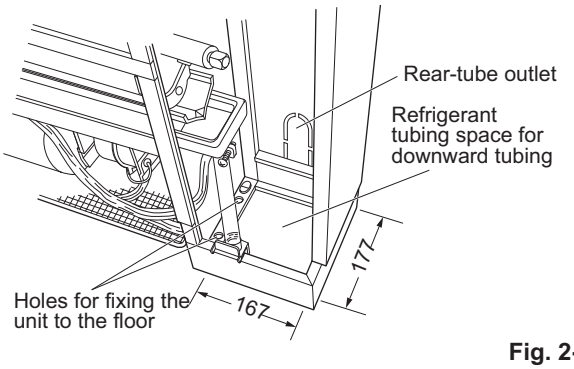

Fig. 2-305

⚠ **CAUTION**

Insulate both gas and liquid tubes.

- To insulate tubes

(1) Wrap the flare nuts with the supplied white insulating tape.
(2) Wrap the flare nuts with the supplied flare insulator.
(3) Fill the clearance between the union insulator and flare insulator with black insulating tape. Fasten both ends of the flare insulator with the supplied vinyl clamps.

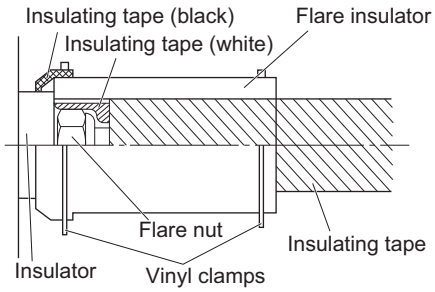

Fig. 2-306

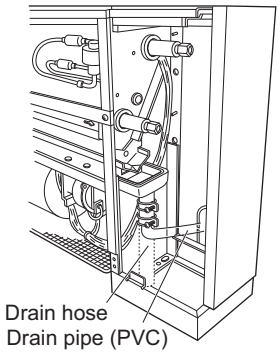

Fig. 2-307

4. Installation Instructions

4-13-94. Installing the Drain Piping

⚠ **CAUTION**

Water leaks may occur if the drain pipes are connected inadequately.

(1) When rear-side drain piping is required bend the drain hose attached to the indoor unit by 90°. Connect a drain pipe (field supply) to the drain hose through the rear tubing outlet in the rear panel. Use a hard PVC pipe (O.D. 25 mm) for the drain piping.

(2) Ensure that the drain pipe has a downward slant of 1/100 or more and that there are no water traps.

(3) Provide insulation for the drain pipe.

(4) After the drain piping is completed, pour water into the drain pan to check that the water drains smoothly.

(5) Remove any dust or debris in the drain pan so that the pipe is not clogged.

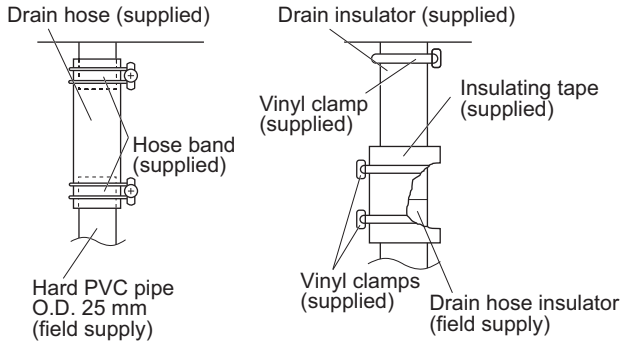

Fig. 2-308

4-13-95. Installing the Remote Controller

A remote controller (optional wired remote controller) can be mounted in the indoor unit (Floor Standing type).

(1) Remove the cover of the optional wired remote controller. (Fig. 2-309)

(2) Remove the front panel. Remove the screws and fixture. (Fig. 2-310)

(3) Place the remote controller into the space in the unit as shown in Fig. 2-310. Assemble the lead wires of the remote controller to its rear side center and route them to the lead wire guide.

(4) Secure the fixture using the supplied screws.

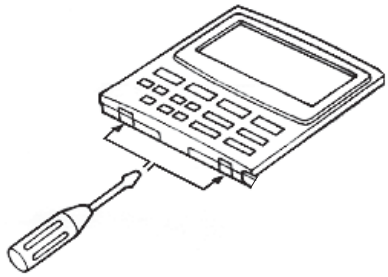

Fig. 2-309

To remove the cover from the remote controller, insert a screwdriver between the cover and the controller as shown in the figure above, and pry off the cover.

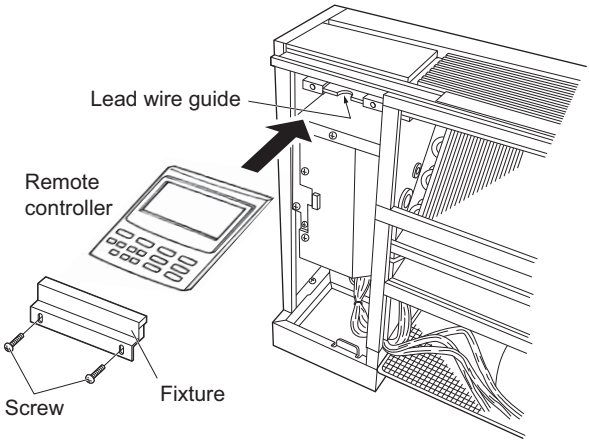

Fig. 2-310

5. HOW TO PROCESS TUBING

The liquid tubing side is connected by a flare nut, and the gas tubing side is connected by brazing.

5-1. Connecting the Refrigerant Tubing

Use of the Flaring Method

Many of conventional split system air conditioners employ the flaring method to connect refrigerant tubes which run between indoor and outdoor units. In this method, the copper tubes are flared at each end and connected with flare nuts.

Flaring Procedure with a Flare Tool

(1) Cut the copper tube to the required length with a tube cutter. It is recommended to cut approx. 30 – 50 cm longer than the tubing length you estimate.

(2) Remove burrs at each end of the copper tubing with a tube reamer or file. This process is important and should be done carefully to make a good flare. Be sure to keep any contaminants (moisture, dirt, metal filings, etc.) from entering the tubing. (Figs. 2-311 and 2-312)

NOTE

When reaming, hold the tube end downward and be sure that no copper scraps fall into the tube. (Fig. 2-312)

(3) Remove the flare nut from the unit and be sure to mount it on the copper tube.

(4) Make a flare at the end of copper tube with a flare tool. (Fig. 2-313)

NOTE

A good flare should have the following characteristics:

- Inside surface is glossy and smooth
- Edge is smooth
- Tapered sides are of uniform length

Caution Before Connecting Tubes Tightly

(1) Apply a sealing cap or water-proof tape to prevent dust or water from entering the tubes before they are used.

(2) Be sure to apply refrigerant lubricant (ether oil) to the inside of the flare nut before making piping connections. This is effective for reducing gas leaks. (Fig. 2-314)

(3) For proper connection, align the union tube and flare tube straight with each other, then screw in the flare nut lightly at first to obtain a smooth match. (Fig. 2-315)

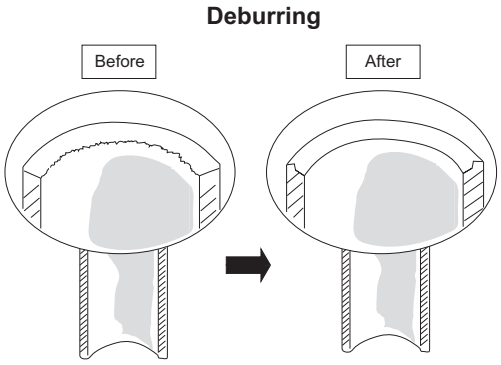

Fig. 2-311

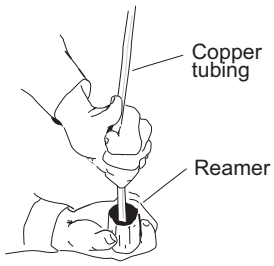

Fig. 2-312

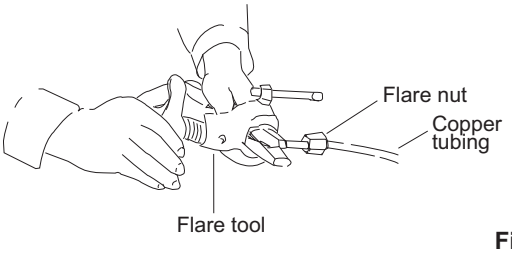

Fig. 2-313

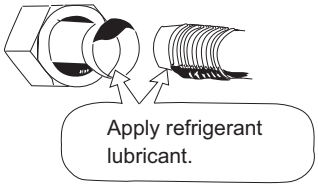

Fig. 2-314

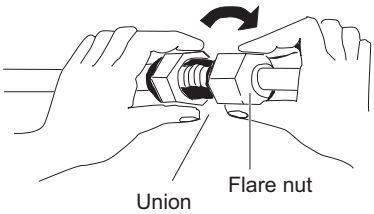

Fig. 2-315

- Adjust the shape of the liquid tube using a tube bender at the installation site and connect it to the liquid tubing side valve using a flare.

Cautions During Brazing

- **Replace air inside the tube with nitrogen gas to prevent copper oxide film from forming during the brazing process. (Oxygen, carbon dioxide and Freon are not acceptable.)**
- **Do not allow the tubing to get too hot during brazing. The nitrogen gas inside the tubing may overheat, causing refrigerant system valves to become damaged. Therefore allow the tubing to cool when brazing.**
- **Use a reducing valve for the nitrogen cylinder.**
- **Do not use agents intended to prevent the formation of oxide film. These agents adversely affect the refrigerant and refrigerant oil, and may cause damage or malfunctions.**

5. HOW TO PROCESS TUBING

5-2. Connecting Tubing Between Indoor and Outdoor Units

(1) Tightly connect the indoor-side refrigerant tubing extended from the wall with the outdoor-side tubing.

(2) To fasten the flare nuts, apply specified torque as at right:

- When removing the flare nuts from the tubing connections, or when tightening them after connecting the tubing, be sure to use 2 adjustable wrenches or spanners as shown. (Fig. 2-316)
  If the flare nuts are over-tightened, the flare may be damaged, which could result refrigerant leakage and cause in injury or asphyxiation to room occupants.
- For the flare nuts at tubing connections, be sure to use the flare nuts that were supplied with the unit, or else flare nuts for R410A (type 2).
  The refrigerant tubing that is used must be of the correct wall thickness as shown in the table at right.
- In order to prevent damage to the flare caused by over-tightening of the flare nuts, use the table above as a guide when tightening.
- When tightening the flare nut on the liquid tube, use an adjustable wrench with a nominal handle length of 200 mm.

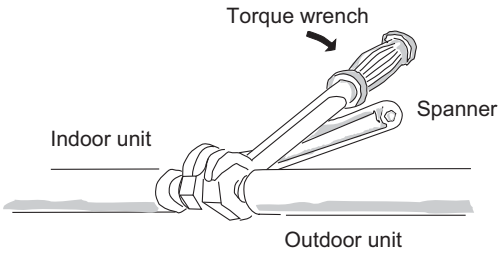

Fig. 2-316

Tube diameter	Tightening torque, approximate	Tube thickness
ø6.35 (1/4”)	14 – 18 N · m {140 – 180 kgf· cm}	0.8 mm
ø9.52 (3/8”)	34 – 42 N · m {340 – 420 kgf· cm}	0.8 mm
ø12.7 (1/2”)	49 – 61 N · m {490 – 610 kgf· cm}	0.8 mm
ø15.88 (5/8”)	68 – 82 N · m {680 – 820 kgf· cm}	1.0 mm
ø19.05 (3/4”)	100 – 120 N · m {1000 – 1200 kgf· cm}	1.2 mm

Because the pressure is approximately 1.6 times higher than conventional refrigerant pressure, the use of ordinary flare nuts (type 1) or thin-walled tubes may result in tube rupture, injury, or asphyxiation caused by refrigerant leakage.

5-3. Insulating the Refrigerant Tubing

Tubing Insulation

- Standard Selection of Insulation Material
  Under the environment of the high temperature and high humidity, the surface of the insulation material is condenses easily. This will result in leakage and dew drop. Refer to the chart shown below when selecting the insulation material.
  In case that the ambient temperature and relative humidity are placed above the line of the insulation thickness, the condensation may occasionally make a dew drop on the surface of the insulation material. In this case, select the better insulation efficiency.

  * However, since the condition will be different due to the sort of the insulation material and the environmental condition of the installation place, see the chart shown below as a reference when making a selection.

Two tubes arranged together

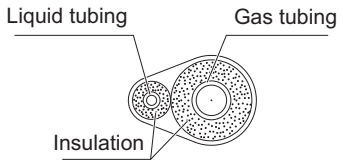

Three tubes arranged together

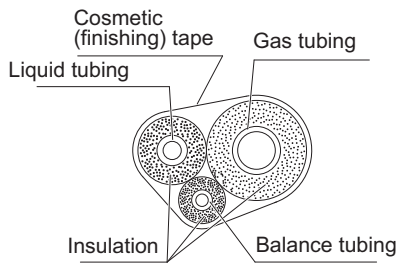

Fig. 2-317

Standard Selection of Tubing Insulation

Calculating condition	
Sort of insulation material	Polyethylene heat resisting material
Thermal conductivity of insulation material	Based on JIS A9501
Calculating formula used when calculating thickness	Based on JIS A9501
Refrigerant temperature	2°C

5. HOW TO PROCESS TUBING

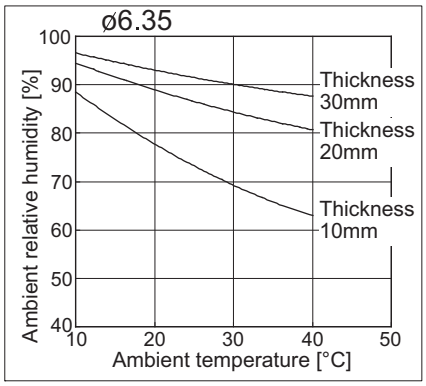

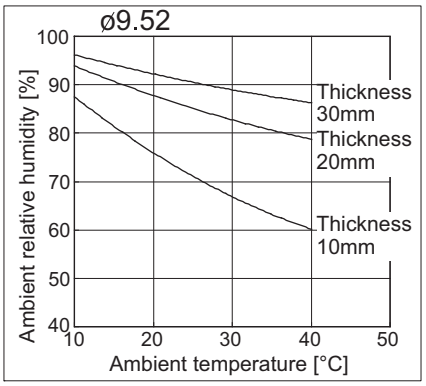

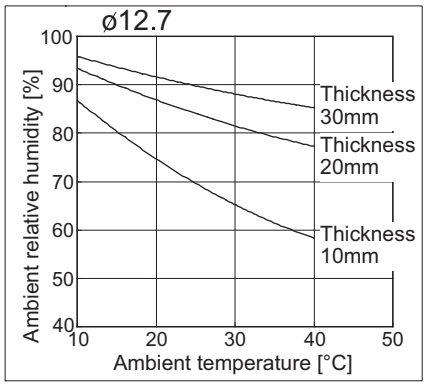

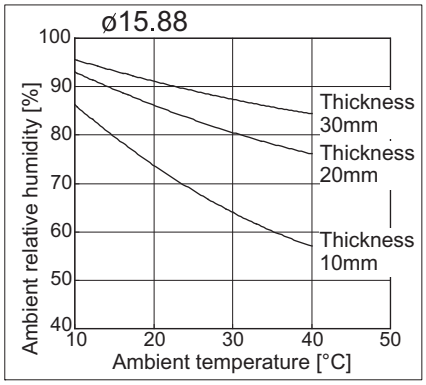

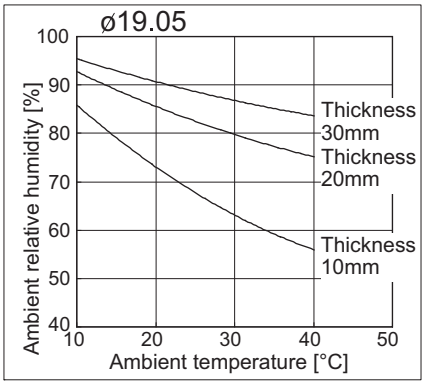

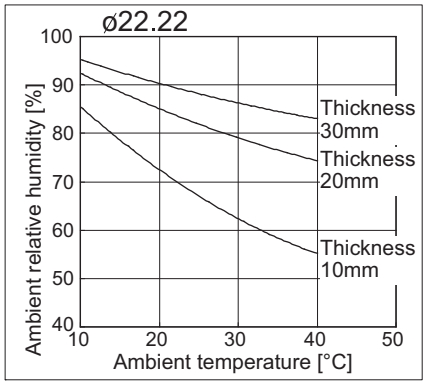

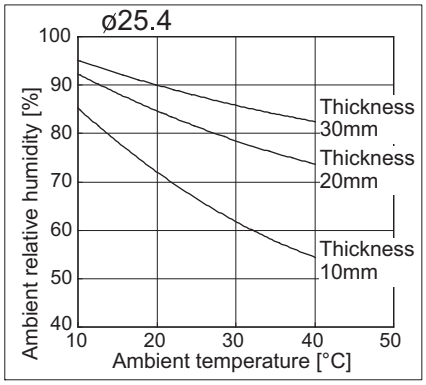

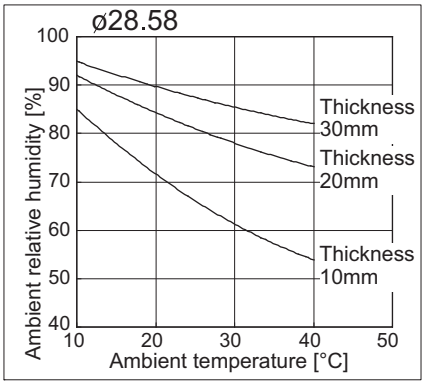

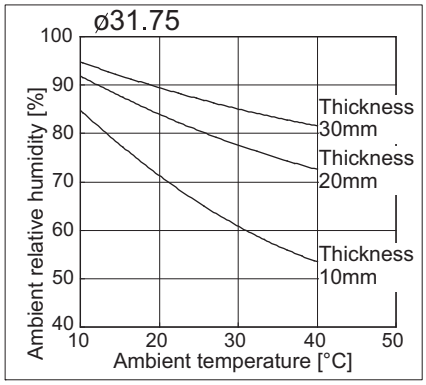

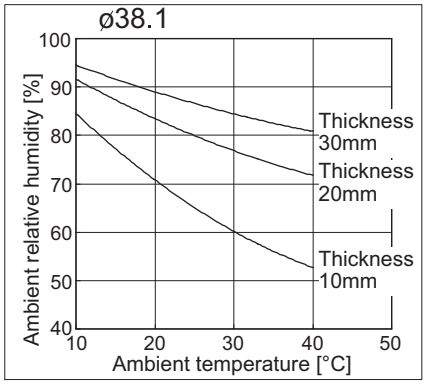

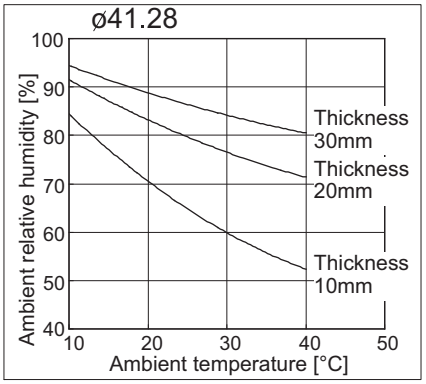

5. HOW TO PROCESS TUBING

CAUTION **If the exterior of the outdoor unit valves has been finished with a square duct covering, make sure you allow sufficient space to use the valves and to allow the panels to be attached and removed.**

Taping the flare nuts

Wind the white insulation tape around the flare nuts at the gas tube connections. Then cover up the tubing connections with the flare insulator, and fill the gap at the union with the supplied black insulation tape. Finally, fasten the insulator at both ends with the supplied vinyl clamps. (Fig. 2-318)

Insulation material

The material used for insulation must have good insulation characteristics, be easy to use, be age resistant, and must not easily absorb moisture.

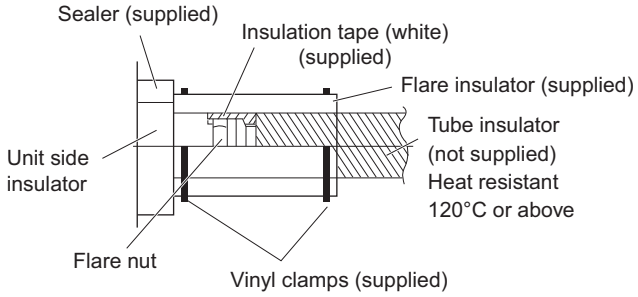

Fig. 2-318

CAUTION

After a tube has been insulated, never try to bend it into a narrow curve because it can cause the tube to break or crack.

Never grasp the drain or refrigerant connecting outlets when moving the unit.

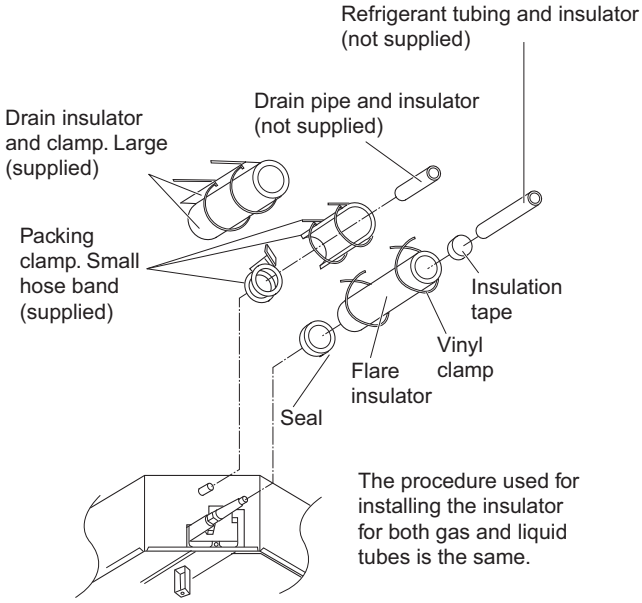

Fig. 2-319

5-4. Taping the Tubes

(1) At this time, the refrigerant tubes (and electrical wiring if local codes permit) should be taped together with armoring tape in 1 bundle. To prevent the condensation from overflowing the drain pan, keep the drain hose separate from the refrigerant tubing.

(2) Wrap the armoring tape from the bottom of the outdoor unit to the top of the tubing where it enters the wall. As you wrap the tubing, overlap half of each previous tape turn.

(3) Clamp the tubing bundle to the wall, using 1 clamp approx. each meter. (Fig. 2-320)

NOTE

Do not wind the armoring tape too tightly since this will decrease the heat insulation effect. Also ensure that the condensation drain hose splits away from the bundle and drips clear of the unit and the tubing.

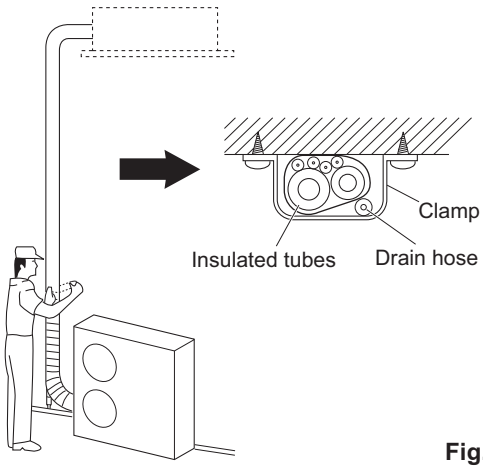

Fig. 2-320

5-5. Finishing the Installation

After finishing insulating and taping over the tubing, use sealing putty to seal off the hole in the wall to prevent rain and draft from entering. (Fig. 2-321)

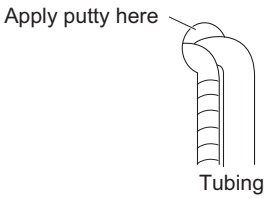

Fig. 2-321

6. AIR PURGING

Air and moisture in the refrigerant system may have undesirable effects as indicated below.

- pressure in the system rises
- operating current rises
- cooling (or heating) efficiency drops
- moisture in the refrigerant circuit may freeze and block capillary tubing
- water may lead to corrosion of parts in the refrigerant system

Therefore, the indoor unit and tubing between the indoor and outdoor unit must be leak tested and evacuated to remove any noncondensables and moisture from the system.

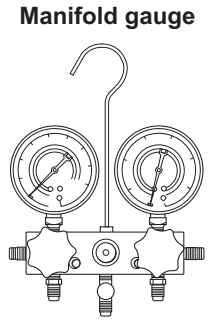

Fig. 2-322

■ Air Purging with a Vacuum Pump (for Test Run) Preparation

Check that each tube (both liquid and gas tubes) between the indoor and outdoor units have been properly connected and all wiring for the test run has been completed. Remove the valve caps from both the gas and liquid service valves on the outdoor unit. Note that both liquid and gas tube service valves on the outdoor unit are kept closed at this stage.

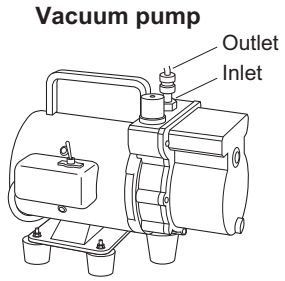

Fig. 2-323

2

Leak test

(1) With the service valves on the outdoor unit closed, remove the 1/4 in. flare nut and its bonnet on the gas tube service valve. (Save for reuse.)

(2) Attach a manifold valve (with pressure gauges) and dry nitrogen gas cylinder to this service port with charge hoses.

CAUTION

Use a manifold valve for air purging. If it is not available, use a stop valve for this purpose. The "Hi" knob of the manifold valve must always be kept closed.

(3) Pressurize the system to no more than 3.8 MPa with dry nitrogen gas and close the cylinder valve when the gauge reading reaches 3.8 MPa. Then, test for leaks with liquid soap.

CAUTION

To avoid nitrogen entering the refrigerant system in a liquid state, the top of the cylinder must be higher than the bottom when you pressurize the system. Usually, the cylinder is used in a vertical standing position.

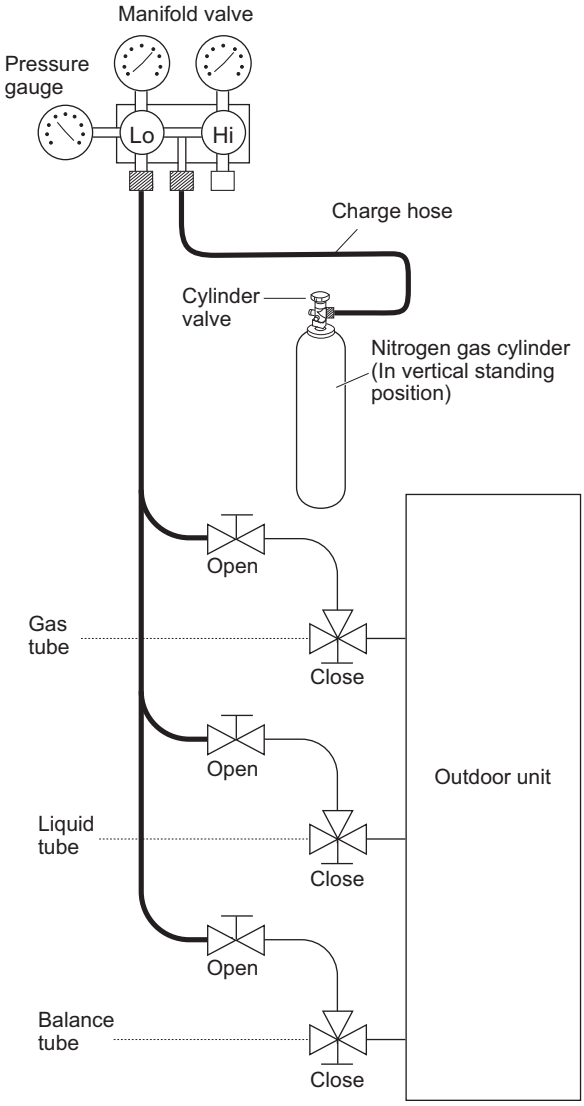

Fig. 2-324

6. AIR PURGING

(4) Do a leak test of all joints of the tubing (both indoor and outdoor) and both gas and liquid service valves. Bubbles indicate a leak. Wipe off the soap with a clean cloth after a leak test.

(5) After the system is found to be free of leaks, relieve the nitrogen pressure by loosening the charge hose connector at the nitrogen cylinder. When the system pressure is reduced to normal, disconnect the hose from the cylinder.

Evacuation

(1) Attach the charge hose end described in the preceding steps to the vacuum pump to evacuate the tubing and indoor unit. Confirm that the “Lo” knob of the manifold valve is open. Then, run the vacuum pump. The operation time for evacuation varies with the tubing length and capacity of the pump. The following table shows the amount of time for evacuation:

Required time for evacuation when 30 gal/min. vacuum pump is used	
If tubing length is less than 15 m	If tubing length is longer than 15 m
45 min. or more	**90 min. or more**

NOTE

The required time in the above table is calculated based on the assumption that the ideal (or target) vacuum condition is less than –101 kPa {–755 mmHg, 5 Torr}.

(2) When the desired vacuum is reached, close the “Lo” knob of the manifold valve and turn off the vacuum pump. Please confirm that the gauge pressure is under –101 kPa {–755 mmHg, 5 Torr} after 4 to 5 minutes of vacuum pump operation.

CAUTION **Use a cylinder designed for use with R410A respectively.**

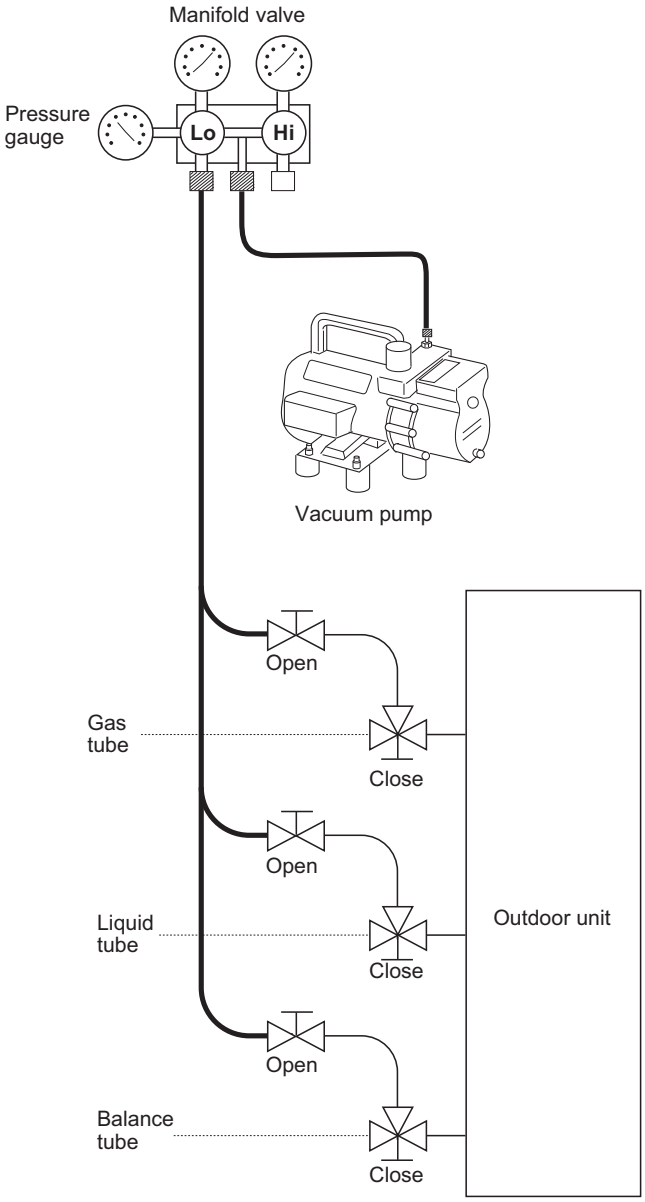

Fig. 2-325

6. AIR PURGING

Charging additional refrigerant

- Charging additional refrigerant (calculated from the liquid tube length as shown in Section “1-8. Additional Refrigerant Charge”) using the liquid tube service valve. (Fig. 2-326)
- Use a balance to measure the refrigerant accurately.
- If the additional refrigerant charge amount cannot be charged at once, charge the remaining refrigerant in liquid form by using the gas tube service valve with the system in cooling operation mode at the time of test run. (Fig. 2-327)

Finishing the job

(1) With a hex wrench, turn the liquid tube service valve stem counter-clockwise to fully open the valve.

(2) Turn the gas tube service valve stem counter-clockwise to fully open the valve.

CAUTION

To avoid gas from leaking when removing the charge hose, make sure the stem of the gas tube is turned all the way out (“BACK SEAT” position).

(3) Loosen the charge hose connected to the gas tube service port (1/4 in.) slightly to release the pressure, then remove the hose.

(4) Replace the 1/4 in. flare nut and its bonnet on the gas tube service port and fasten the flare nut securely with an adjustable wrench or box wrench. This process is very important to prevent gas from leaking from the system.

(5) Replace the valve caps at both gas and liquid service valves and fasten them securely.

This completes air purging with a vacuum pump.
The air conditioner is now ready for a test run.

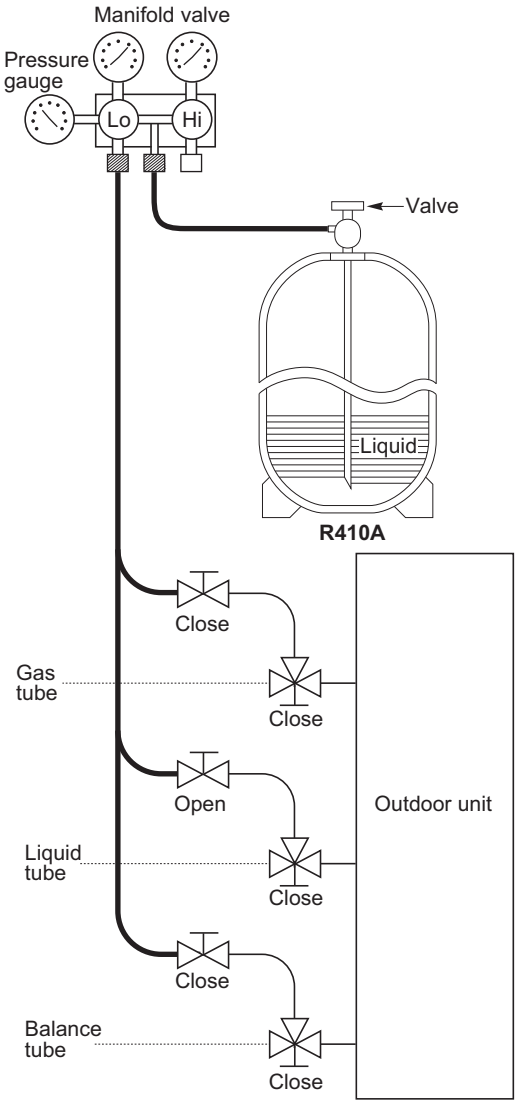

Fig. 2-326

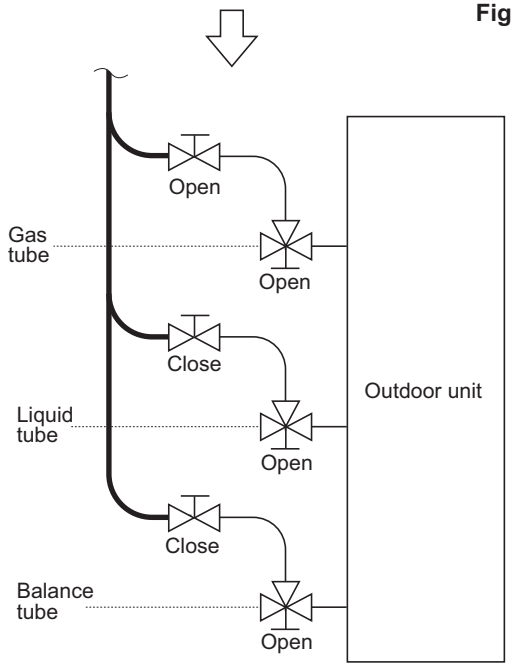

Fig. 2-327

7. Optional Parts

7-1. Distribution Joint Kits

■ CZ-P160BK2 (for R410A)

How to Attach Distribution Joint

1. Accompanying Parts
   Check the contents of your distribution joint kit.

2. Distribution Joint Kits (with insulation)

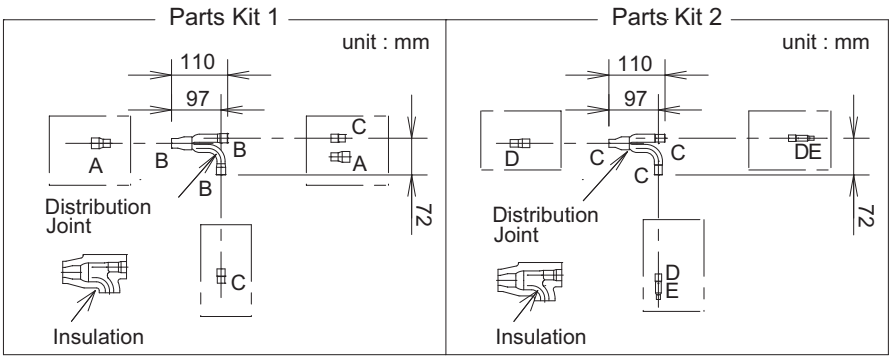

- Size of connection point on each part (Shown are inside diameters of tubing)

Size	mm	Inch
Part A	ø19.05	3/4
Part B	ø15.88	5/8
Part C	ø12.7	1/2
Part D	ø9.52	3/8
Part E	ø6.35	1/4

3. Making Branch Connections

- For branching tubes, install 150mm or larger (including reducer) straight tubing up to the point where the tube branches (or after the point where the tubes join together). (Fig. 2-328)
- Using a tube cutter, cut the joints at the diameter required to match the outside diameter of the tubing you are connecting. (This is usually done at the installation site.)
  The tube diameter depends on the total capacity of the indoor unit. Note that you do not have to cut the joints if it already matches the tubing end size. For size selection of the tube diameter, refer to the installation instructions provided with the outdoor unit.

  NOTE

  Avoid forceful cutting that may harm the shape of the joints or tubing. (Inserting the tubing will not be possible if the tube shape is not proper.)

- Cut off as far away from stopper as possible. (Fig. 2-329)
- After cutting the joints, be sure to remove burrs on the inside of the joints. (If the joints have been squashed or dented badly, reshaped them using a tube spreader.)
- Make sure there is no dirt or other foreign substances inside the distribution joint.
- The distribution joint can be either horizontal or vertical. (Fig. 2-330)
  In the case of horizontal, the L-shaped tubing must be slanted slightly upward (15˚ to 30˚).
- When brazing a pipe E to the reducer of which middle pipe inner dimension is D as shown above chart, cut the middle pipe as long as possible so that the pipe E can be inserted.
- When brazing, replace air inside the tube with nitrogen gas to prevent copper oxide from forming.
- To insulate the distribution joint, use the supplied tubing insulation. (If using insulation other than that supplied, make sure that its heat resistance is 120˚C or higher.)
- For additional details, refer to the installation instructions provided with the outdoor unit.

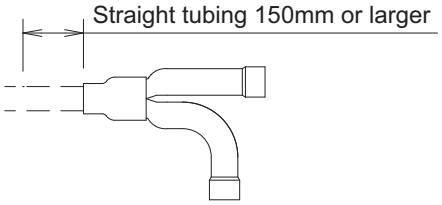

Fig. 2-328

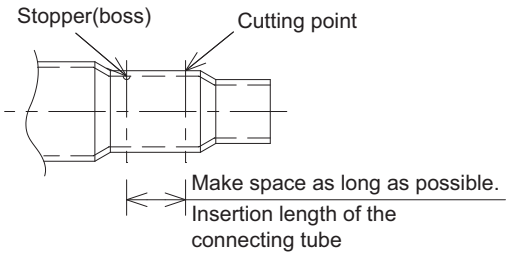

Fig. 2-329

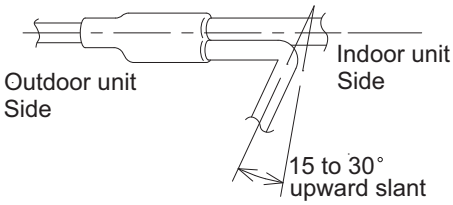

In case of horizontal position

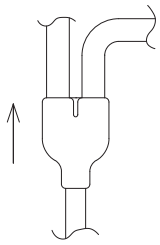

In case of vertical position (directed upward)

Fig. 2-330

7. Optional Parts

■ CZ-P680BK2 (for R410A)

How to Attach Distribution Joint

1. Accompanying Parts
   Check the contents of your distribution joint kit.

Part Name	Parts Kit 1	Parts Kit 2
Distribution Joints	1	1
Insulations	1	1
Reducing Joints	5	3

2. Distribution Joint Kits (with insulation)

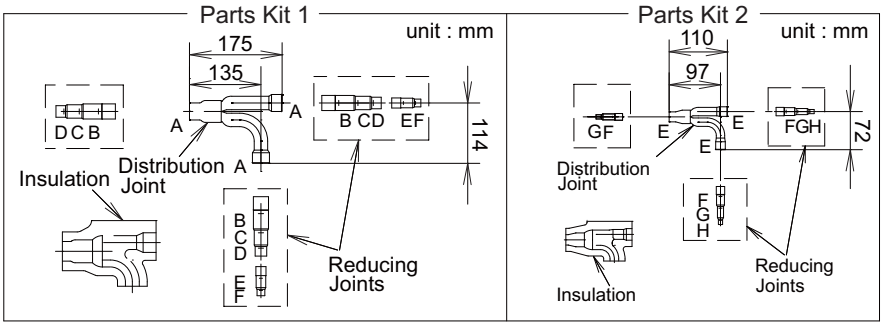

- Size of connection point on each part (Shown are inside diameters of tubing)

Size	mm	Inch
Part A	ø28.58	1-1/8
Part B	ø25.4	1
Part C	ø22.22	7/8
Part D	ø19.05	3/4
Part E	ø15.88	5/8
Part F	ø12.7	1/2
Part G	ø9.52	3/8
Part H	ø6.35	1/4

3. Making Branch Connections
   - For branching tubes, install 150mm or larger (including reducer) straight tubing up to the point where the tube branches (or after the point where the tubes join together). (Fig. 2-331)
   - Using a tube cutter, cut the joints at the diameter required to match the outside diameter of the tubing you are connecting. (This is usually done at the installation site.) The tube diameter depends on the total capacity of the indoor unit. Note that you do not have to cut the joints if it already matches the tubing end size. For size selection of the tube diameter, refer to the installation instructions provided with the outdoor unit.

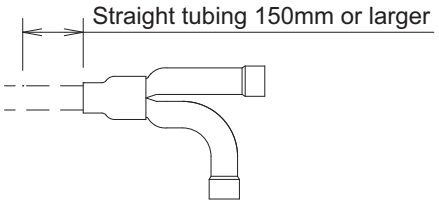

Fig. 2-331

NOTE

Avoid forceful cutting that may harm the shape of the joints or tubing. (Inserting the tubing will not be possible if the tube shape is not proper.)

- Cut off as far away from stopper as possible. (Fig. 2-332)
- After cutting the joints, be sure to remove burrs on the inside of the joints. (If the joints have been squashed or dented badly, reshaped them using a tube spreader.)
- Make sure there is no dirt or other foreign substances inside the distribution joint.
- The distribution joint can be either horizontal or vertical. (Fig. 2-333) In the case of horizontal, the L-shaped tubing must be slanted slightly upward (15˚ to 30˚).
- When brazing, replace air inside the tube with nitrogen gas to prevent copper oxide from forming.
- To insulate the distribution joint, use the supplied tubing insulation. (If using insulation other than that supplied, make sure that its heat resistance is 120˚C or higher.)
- For additional details, refer to the installation instructions provided with the outdoor unit.

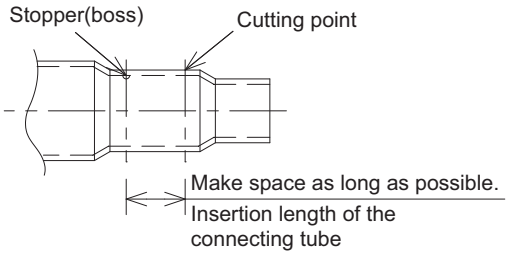

Fig. 2-332

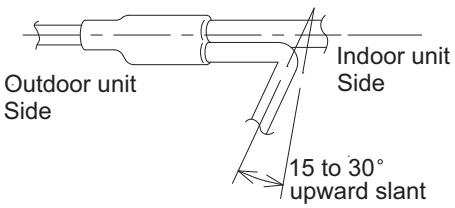

In case of horizontal position

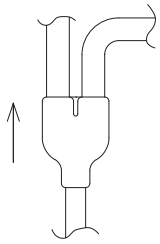

In case of vertical position (directed upward or downward)

Fig. 2-333

7. Optional Parts

■ CZ-P1350BK2 (for R410A)

How to Attach Distribution Joint

1. Accompanying Parts
   Check the contents of your distribution joint kit.

Part Name	Parts Kit 1	Parts Kit 2
Distribution Joints	1	1
Insulations	1	1
Reducing Joints	7	4

2. Distribution Joint Kits (with insulation)

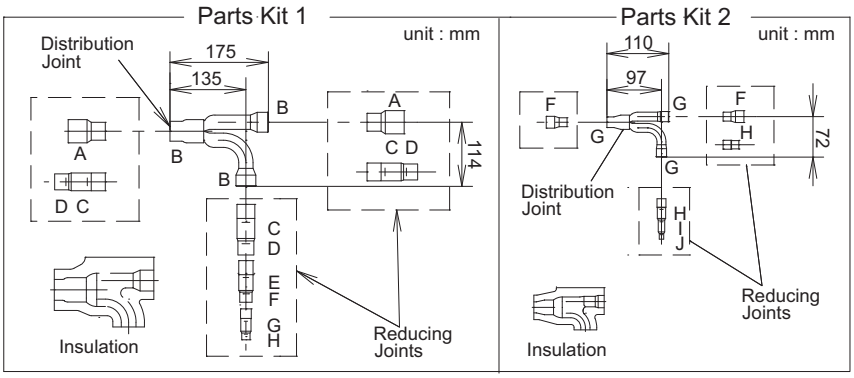

- Size of connection point on each part (Shown are inside diameters of tubing)

Size	mm	Inch
Part A	ø38.1	1-1/2
Part B	ø31.75	1-1/4
Part C	ø28.58	1-1/8
Part D	ø25.4	1
Part E	ø22.22	7/8
Part F	ø19.05	3/4
Part G	ø15.88	5/8
Part H	ø12.7	1/2
Part I	ø9.52	3/8
Part J	ø6.35	1/4

3. Making Branch Connections
   - For branching tubes, install 150mm or larger (including reducer) straight tubing up to the point where the tube branches (or after the point where the tubes join together). (Fig. 2-334)
   - Using a tube cutter, cut the joints at the diameter required to match the outside diameter of the tubing you are connecting. (This is usually done at the installation site.) The tube diameter depends on the total capacity of the indoor unit. Note that you do not have to cut the joints if it already matches the tubing end size. For size selection of the tube diameter, refer to the installation instructions provided with the outdoor unit.

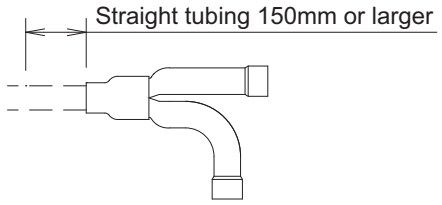

Fig. 2-334

NOTE

Avoid forceful cutting that may harm the shape of the joints or tubing. (Inserting the tubing will not be possible if the tube shape is not proper.)

- Cut off as far away from stopper as possible. (Fig. 2-335)
- After cutting the joints, be sure to remove burrs on the inside of the joints. (If the joints have been squashed or dented badly, reshaped them using a tube spreader.)
- Make sure there is no dirt or other foreign substances inside the distribution joint.
- When brazing, replace air inside the tube with nitrogen gas to prevent copper oxide from forming.
- To insulate the distribution joint, use the supplied tubing insulation. (If using insulation other than that supplied, make sure that its heat resistance is 120 ˚C or higher.)
- For additional details, refer to the installation instructions provided with the outdoor unit.

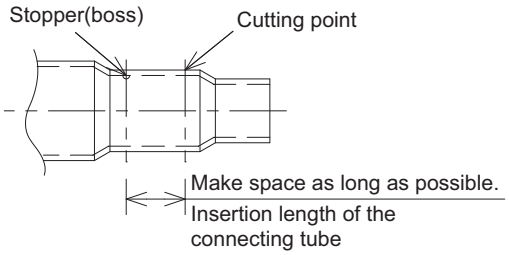

Fig. 2-335

7. Optional Parts

■ CZ-P680PJ2, CZ-P1350PJ2 (for R410A)

Model	Capacity	Parts Kit Combination	
CZ-P1350PJ2	135kW or less	Parts Kit 1	Parts Kit 3
CZ-P680PJ2	68kW or less	Parts kit 2	Parts Kit 3

How to Attach Distribution Joint

1. Accompanying Parts
   Check the contents of your distribution joint kit.

2. Distribution Joint Kits (with insulation)

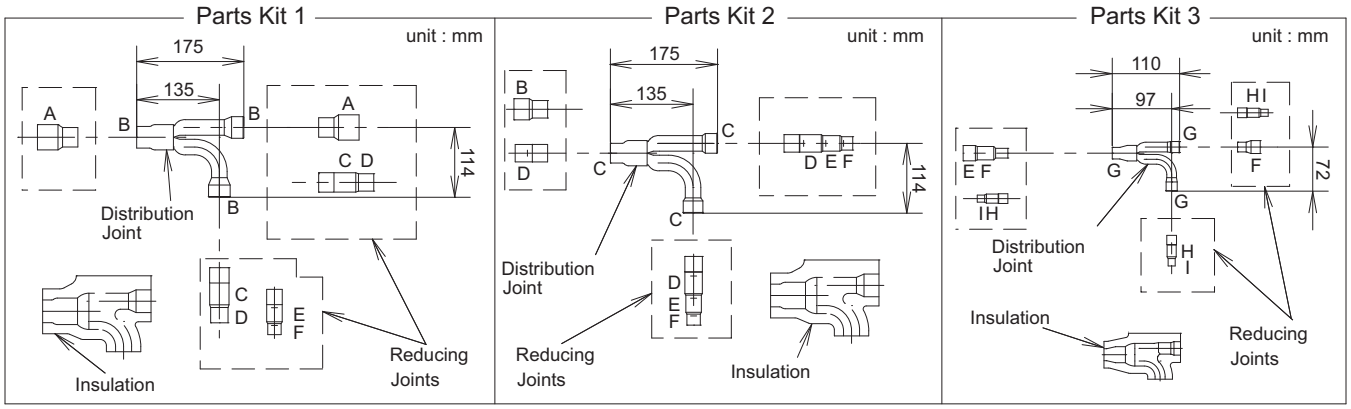

- Size of connection point on each part (Shown are inside diameters of tubing)

Size	Part A	Part B	Part C	Part D	Part E	Part F	Part G	Part H	Part I	Part J
mm	ø38.1	ø31.75	ø28.58	ø25.4	ø22.22	ø19.05	ø15.88	ø12.7	ø9.52	ø6.35
Inch	1-1/2	1-1/4	1-1/8	1	7/8	3/4	5/8	1/2	3/8	1/4

3. Making Branch Connections

- For branching tubes, install 150mm or larger (including reducer) straight tubing up to the point where the tube branches (or after the point where the tubes join together). (Fig. 2-336)
- Using a tube cutter, cut the joints at the diameter required to match the outside diameter of the tubing you are connecting. (This is usually done at the installation site.) The tube diameter depends on the total capacity of the indoor unit. Note that you do not have to cut the joints if it already matches the tubing end size. For size selection of the tube diameter, refer to the installation instructions provided with the outdoor unit.

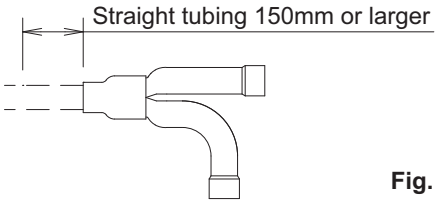

Fig. 2-336

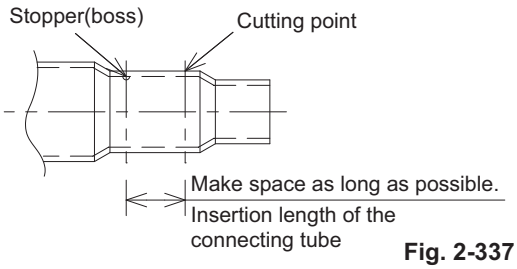

Fig. 2-337

NOTE

Avoid forceful cutting that may harm the shape of the joints or tubing. (Inserting the tubing will not be possible if the tube shape is not proper.)

- Cut off as far away from stopper as possible. (Fig. 2-337)
- After cutting the joints, be sure to remove burrs on the inside of the joints. (If the joints have been squashed or dented badly, reshaped them using a tube spreader.)
- Make sure there is no dirt or other foreign substances inside the distribution joint.
- The distribution joint can be either horizontal or vertical. (Fig. 2-338) In the case of horizontal, the L-shaped tubing must be slanted slightly upward (15˚ to 90˚).
- When brazing, replace air inside the tube with nitrogen gas to prevent copper oxide from forming.
- To insulate the distribution joint, use the supplied tubing insulation. (If using insulation other than that supplied, make sure that its heat resistance is 120˚C or higher.)
- For additional details, refer to the installation instructions provided with the outdoor unit.

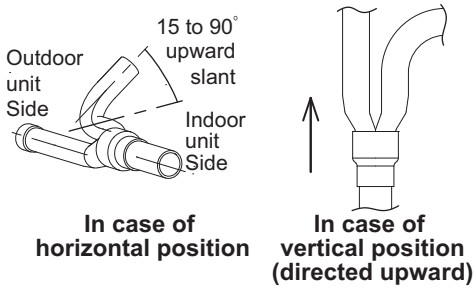

Fig. 2-338

Direction of Distribution Joint

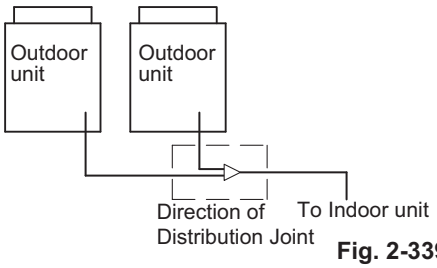

Fig. 2-339

7. Optional Parts

■ CZ-P4HPC2, CZ-P4HP2C2, CZ-P4HP1C2 (for R410A)

Header Tube Kit Installation

Unit : mm

Tube size

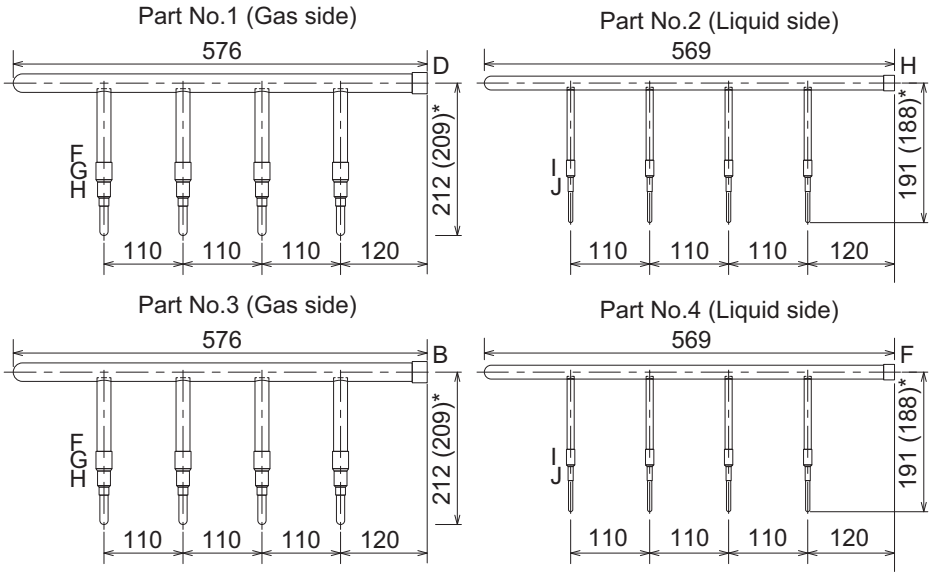

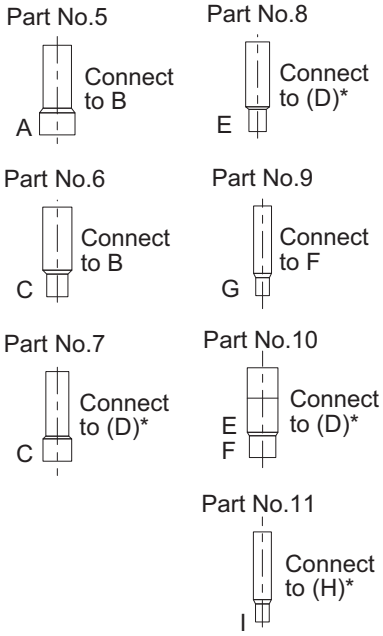

NOTE * The values and alphabets given in the parenthesis indicate the size of CZ-P4HPC2, P4HP1C2.

- Size of connection joint on each part (shown are inside diameter of tubing)

Size	mm	Inch
A	ø38.1	1-1/2
B	ø31.75	1-1/4
C	ø28.58	1-1/8
D	ø25.4	1
E	ø22.22	7/8
F	ø19.05	3/4
G	ø15.88	5/8
H	ø12.7	1/2
I	ø9.52	3/8
J	ø6.35	1/4

Supplied Parts

	Part No.1	Part No.2	Part No.3	Part No.4	Part No.5	Part No.6	Part No.7	Part No.8	Part No.9	Part No.10	Part No.11
CZ-P4HPC2	○	○					○	○			
CZ-P4HP2C2			○	○	○	○			○		
CZ-P4HP1C2	○	○								○	○

Header Selection

	Total capacity of indoor units (kW) after distribution joint
CZ-P4HPC2	More than 16.1kW to less than 45.0kW
CZ-P4HP2C2	More than 45.1kW
CZ-P4HP1C2	Less than 28.0kW

Installation

- Be sure to handle the header tube in the correct direction as shown below.

<Horizontal use>

- Be sure to use the tube in the 15-degree to 30-degree tilt position. Regarding the branch tube of the indoor unit side, raise the tube correctly as shown in “Horizontal sideways use” and joint the tube sideways.

Horizontal sideways use

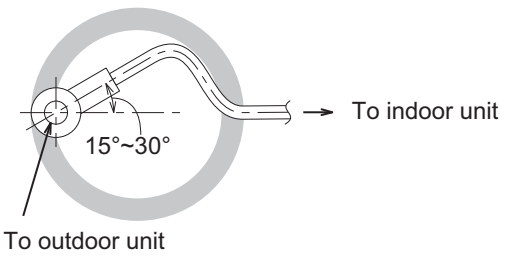

Horizontal upward use

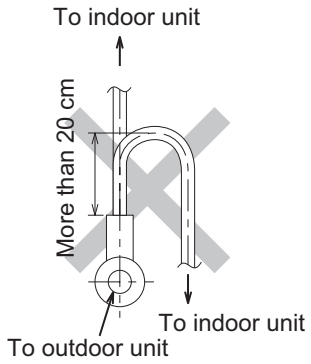

7. Optional Parts

<Vertical use>

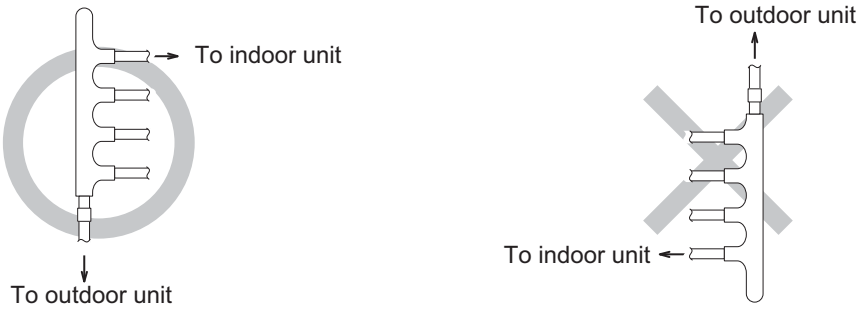

- Cut off the header tube by the pipe cutter according to meet the demand of the local tube size selected in consideration of the total amount of indoor units.
  (It is not necessary to cut off the tube if it is identical to the tip of the size.)

NOTE

Do not forcibly cut off the tube to escape deformation. (If doing so, connection tube cannot be inserted.)

- When using with 3 indoor units, cut off the tube and joint in the position fitted to the refrigerant tubing size at the side of 3 indoor units. When not to use some of the header tubes, leave as-is.
- When using with 5 to 8 indoor units, joint two header tubes as shown in the figure below. (Limited up to 2 header tubes)
- Maximum length of two header tubes should be within 2m as shown in the figure below.
- Connection of branch-to-branch tube is strictly prohibited.

2

In case of using header tube kit :

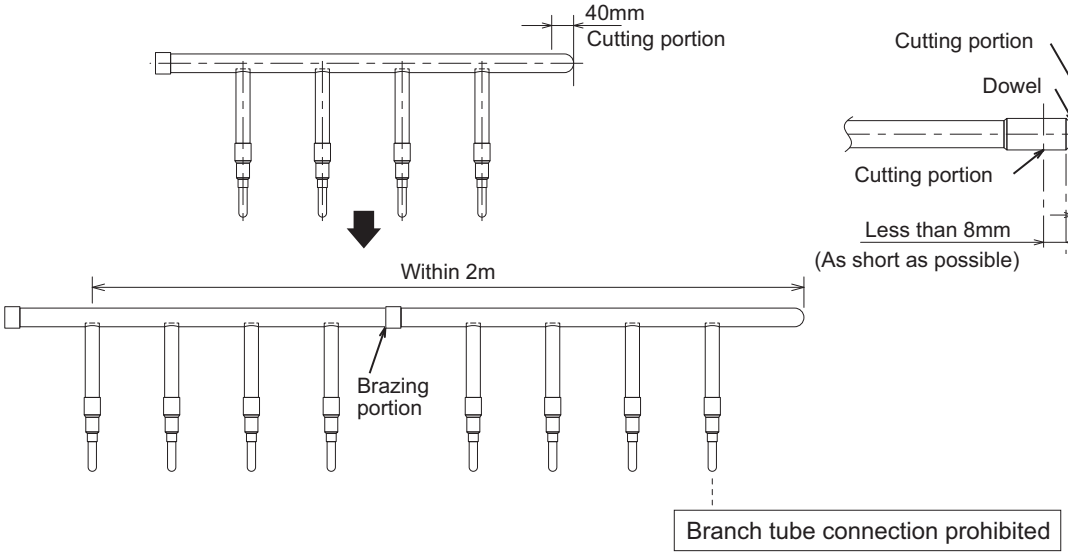

Tube cutting portion :

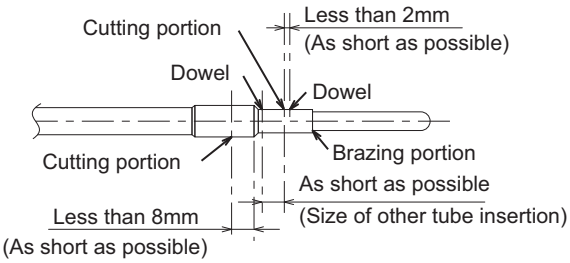

- After cutting off the tubing, carefully remove burrs from the cut cross section of the tube and make a smooth finish.
  (If there is any hollow on the tube, enlarge the opening port by a mechanical pipe expander.)
- Use the supplied reducer according to the tube size from the side of outdoor unit. In this case, braze it in the local field.
- Check that there is no foreign substance inside the branch tube.
- Use the supplied insulator for the insulation of the branch tube.
  (When using other than that, be sure to insulate it to tolerate the temperature of more than 120°C.)
- For the details, refer to “Installation Instructions”.

Request for Replacement of Nitrogen When Brazing

If the replacement of nitrogen was not carried out when brazing the refrigerant tube of the outdoor unit and indoor unit, oxidized scale occurs and the motor valve and strainer become clogged.
This will cause malfunction. It is necessary to replace the air in the tube with the nitrogen gas when brazing the tube and prevent the trouble caused by the oxidized scale.

7. Optional Parts

7-2. RAP Valve Kit (Refrigerant Accumulation Protector Valve Kit)

■ CZ-P160RVK2 (for R410A)

1. Accessories

Part name	Figure	Q'ty	Remarks
Strainer assembly for gas tube		2	For gas tube NOTE Two pieces were joined at the time of shipment from the factory. Separate them for use.
Flare insulator		2	For gas tube
		2	For liquid tube
Insulating tape		4	For flare nut sections of gas and liquid tube
Vinyl clamp		14	For both ends of insulator
Washer		2	For suspension bolt
Suspension hook		1	Used to suspend RAP valve kit
M4 screw		4	Used to suspend RAP valve kit
Connecting tube		2	For ø12.7 gas tube connection
		2	For ø9.52 liquid tube connection

2. Valve Kit Dimensions and Components

The maximum capacity of the indoor unit that can be connected is 14 kW (5 hp).

For 22.4 kW (8 hp) and 28 kW (10 hp) units, use 2 RAP valve kits connected in parallel. (Refer to Fig. 2-346)

Dimensions and Components

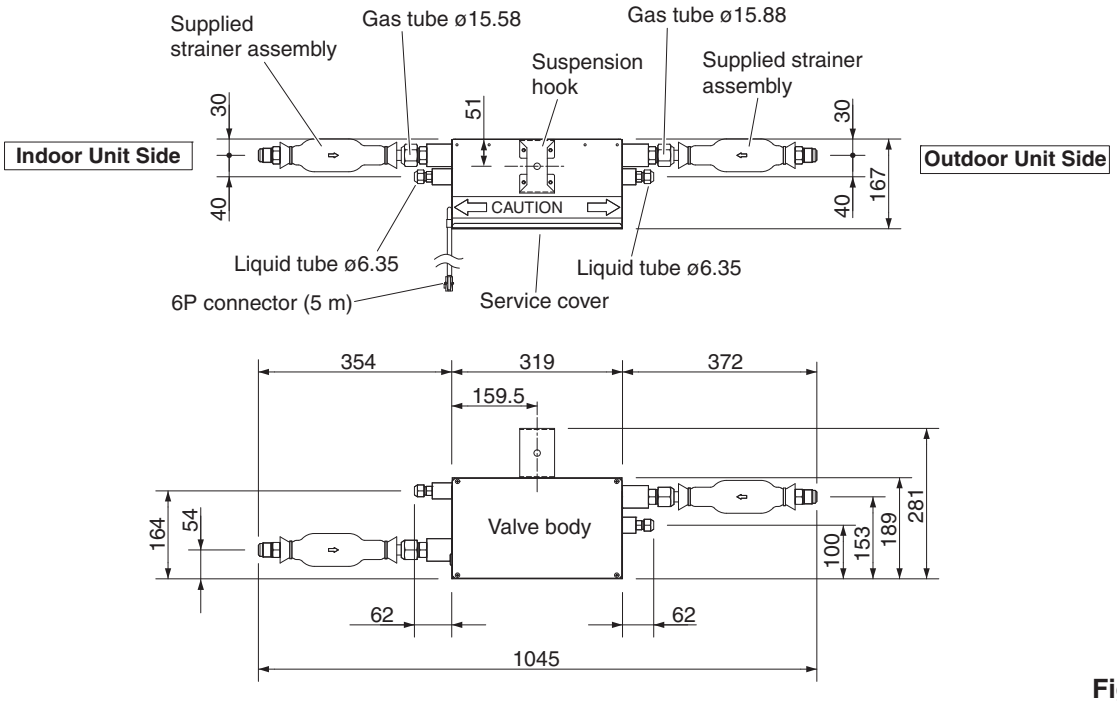

Fig. 2-340

NOTE

This figure shows the valve body with the suspension hook and strainer assemblies installed.

7. Optional Parts

Connecting Tube Shape (For ø9.52 liquid tube connection)

Accessories

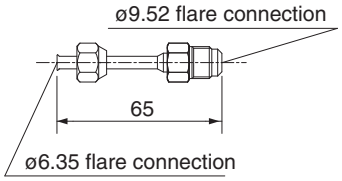

- When insulating this tube, use the thermal insulation provided for the liquid tubes.
- This insulation is used when connecting the ø9.52 liquid tube.

Fig. 2-341

Connecting Tube Shape (For ø12.7 gas tube connection)

Accessories

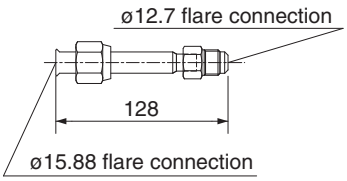

- Thermal insulation for this tube is not supplied. Use field-supply insulation.
- This insulation is used when connecting the ø12.7 gas tube. (It is used between the strainer assy and the connected tubing.)

Fig. 2-342

3. Air-tightness Test

Nitrogen is sealed inside the main unit. Before loosening the flare section, perform the following air-tightness check. Use pliers or a similar tool to bend the end of the indoor unit hermetically sealed tubing so that a crack is formed. Verify that a “pffft” sound occurs.

Air-tightness Test

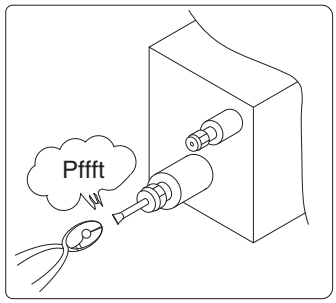

Fig. 2-343

4. Installation

(1) Preparation

- Fit the supplied suspension hook to the valve body with 4 screws.
- Next, fit the strainer assemblies to the gas tube inlet and outlet and tighten the flare nut.
- In doing this, **be sure to use 2 spanners** together and tighten the flare nut with the tightening torque shown in Table 2-27.
- Since the RAP Valve Kit contains nitrogen, be careful when removing the flare nut.
- The diameter of the indoor unit tubing may be different from the diameter of the tubing for this unit.
  If this is the case, refer to Figs. 2-341 and 2-342 (for the liquid tube and gas tube, respectively) and follow the instructions there.
  For 22.4 kW (8hp) and 28 kW (10hp) indoor units, connect 2 RAP Valve Kits in parallel.

Assembly Drawing

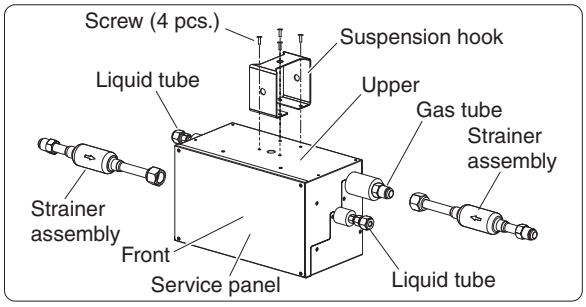

Fig. 2-344

Service Space

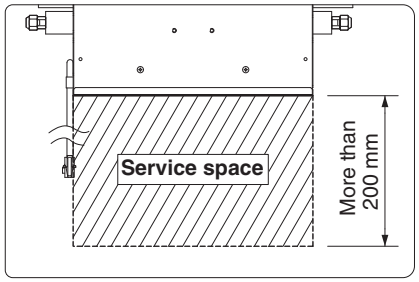

Fig. 2-345

Example of RAP Valve Kit Installation

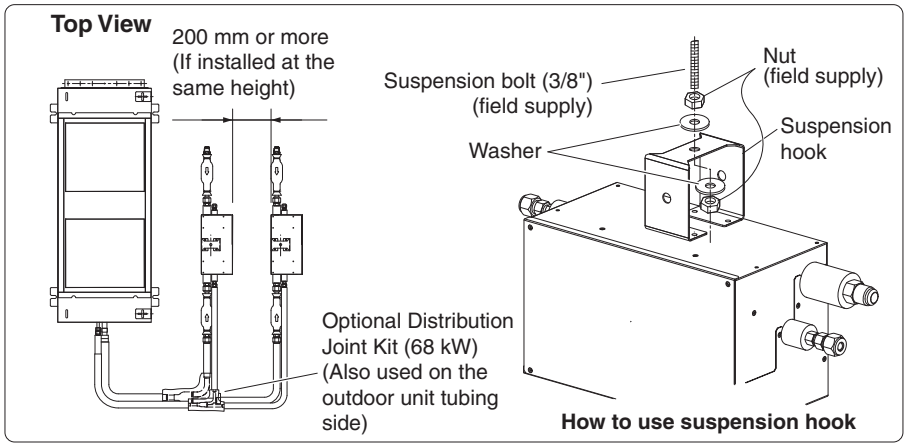

Fig. 2-346

7. Optional Parts

(2) Notes on Installation

- **For the direction for connecting the indoor and outdoor unit and RAP Valve Kit, be sure to follow the instructions on the label of the valve body.**

- Be sure to secure the valve body by using its structure with the suspension bolt, etc.
- Install the valve body within **a distance of 30 m from the indoor unit** as shown in Fig. 2-346.
- Be sure to install the valve body **with its upper surface facing upward**.
- When installing the valve, ensure a service space of 200 mm or more (Fig. 2-345).
- Secure the valve body by using the upper or side holes of the suspension hook.
- Do not place the valve body directly on the ceiling surface. Also, do not install near conference rooms or other rooms where extremely quiet operation is required.
- **Never do drilling or welding** on the sheet metal of the valve body.
- Place the valve body so that it does not hinder draining.
  If using the optional tubing kit, refer to the installation manual for the kit.

Connection

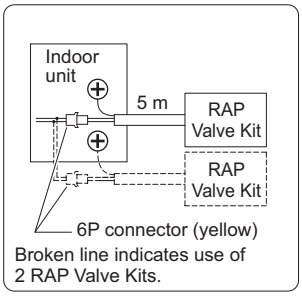

Fig. 2-347

5. Wiring, Tubing, and Insulation

(1) Wiring

- Put the 6P connector from the RAP Valve Kit through the power inlet and connect it to the 6P connector (yellow). (See Fig. 2-347)
- Secure the supplied cable with the binding band inside the unit.
- Do not run the supplied cable through the same wiring conduit together with the remote control line and inter-unit control line.

(2) Refrigerant Tubing

- **Be sure to use 2 spanners** together for removing the flare nut at the tubing connection or when tightening the flare nut during tubing connection.
- To prevent destruction in the flared portion due to over-tightening the flare nut, tighten the nut using the table at the right as a standard torque.

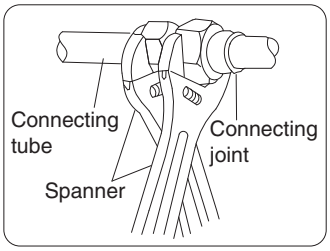

Table 2-27. Tightening Torque

Tubing size	Tightening torque	
	N•m	kgf•cm
ø6.35 (1/4")	16±2	Approx. 140 – 180
ø9.52 (3/8")	38±4	Approx. 340 – 420
ø12.7 (1/2")	55±6	Approx. 490 – 610
ø15.88 (5/8")	75±7	Approx. 680 – 820
ø19.05 (3/4")	110±10	Approx. 1,000 – 1,200

(3) Insulation

Be sure to provide insulation after finishing leak inspection.

- Be sure to provide insulation to the tubing.
- Use insulation with a thickness of 10 mm or more, with heat resistance of 120°C or more for gas tubes and 80°C or more for liquid tubes. If the ambient conditions exceed DB 30°C and RH 70%, increase the thickness of the thermal insulation by one step.
- Put the supplied insulating tape, 2 pieces of each, around the flare nut portion of the liquid tube.

Insulation

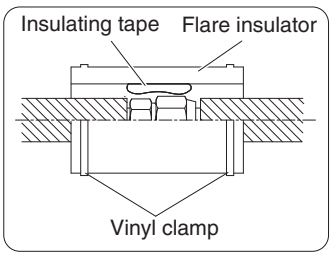

Fig. 2-348

- Next, put the supplied flare insulator around the flare nut portion and secure both ends with the vinyl clamps.
- Failure to provide insulation may cause water leakage due to condensation.
- Thermal insulation is not supplied with the connecting tube (for connecting to the ø12.7 gas tube).
  If this tube is used, obtain insulation (field supply) separately.

7. Optional Parts

7-3. External Electronic Expansion Valve Kit for Indoor Unit

■ CZ-P56SVK2, CZ-P160SVK2 (for R410A)

Precautions in this manual are given in the form of “Warnings” or “Cautions.
” Both types of precautions contain important information related to your safety, the safety of users, and the correct operation, installation, or maintenance of the air conditioning system. Be sure to carefully observe all relevant precautions.

WARNING This symbol refers to a hazard or unsafe practice which can result in severe personal injury or death.

CAUTION This symbol refers to a hazard or unsafe practice which can result in personal injury or product or property damage.

- This external electronic expansion valve is compatible with the refrigerants listed below.
  R410A, R407C, R22
- **Checking Parts**
  Please check these parts below that came in the box.

	Description	Shape	Q'ty
1	External electronic expansion valve (Extension cord 8 m)		1
2	Flare insulator		2
3	Clamp (Large: 350 mm, Small: 200 mm)		Large: 2 Small: 4
4	Connector-converter cable		1
5	Installation manual		1
6	Insulating tape	White (heat resisting)	2

Installation Procedure

1. Positioning for Installation

- The valve should be connected to the liquid tube.
  Determine the position for installation referring to the diagram of outer dimensions. (Fig. 2-349)
  Refrigerant-flow noise may occur from the external electronic expansion valve. As a guide, the distance from the indoor unit should be a minimum of 5 m, but less than 8 m. (Install away from locations where strictly quiet operation is required.) If this distance is unavailable, install inside the ceiling or in another location where noise insulation is possible.
  This is a functional component, and therefore may require inspection and replacement.
  Consider this when deciding the installation location.
  (For example, place near an inspection port, or provide one.)
- This valve is for indoor use. Do not install the valve outdoors.

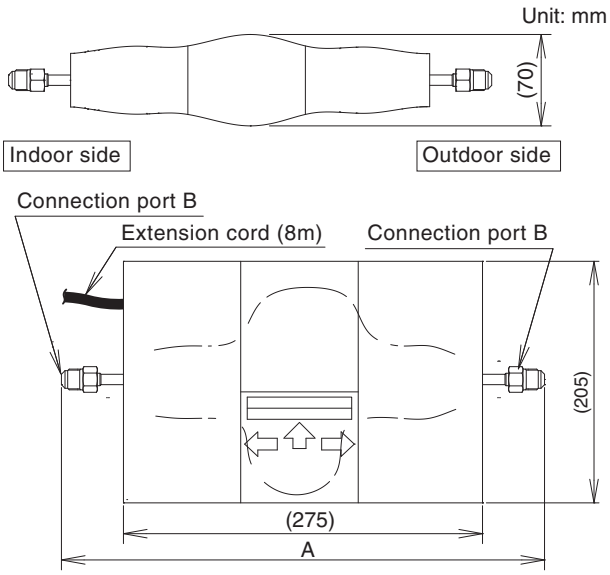

Type	A (mm)	B (mm)
56	325	ø6.35
160	360	ø9.52

Fig. 2-349 Diagram of outer dimensions

7. Optional Parts

2. Cutting and Flaring of Liquid Tube

After determining the position for installation, cut the liquid tube and flare the connecting portion.
(Pay attention to the notes below when flaring the tubes.)

NOTE

- After cutting the tube, deburr and finish the end face smoothly and correctly.
- Do not damage tubes while flaring.
- Take care not to allow dirt and deburred chips into the tube.
- Use the flare nut which came with External Electronic Expansion Valve Kit.
- The flaring dimensions for R410A are different from the conventional dimensions for R407C and R22. For R410A, the specially created flaring tool is recommended.
  However a conventional tool can be used by adjusting the amount of copper tube projection as shown in the table below.

Unit: mm

Rigid (clutch type)		
R410A		R407C, R22
If special R410A tool is used	If conventional tool is used	If conventional tool is used
B=0~0.5	1.0~1.5	0~0.5

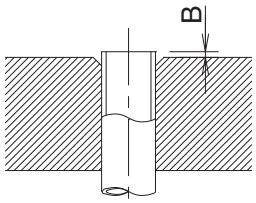

Copper tube projection for flaring: B (mm)

Fig. 2-350

3. Connection of External Electronic Expansion Valve with Tubing

In connection with tubing, take care to fit the external electronic expansion valve in the right direction. Be sure to install with the UP mark on the label pointing upwards. Also when connecting the flare, use the arrow marks on the label to check the directions of the indoor unit side and outdoor unit side.
(The wiring outlet side faces the indoor unit.)
(Refer to Fig. 2-351.)

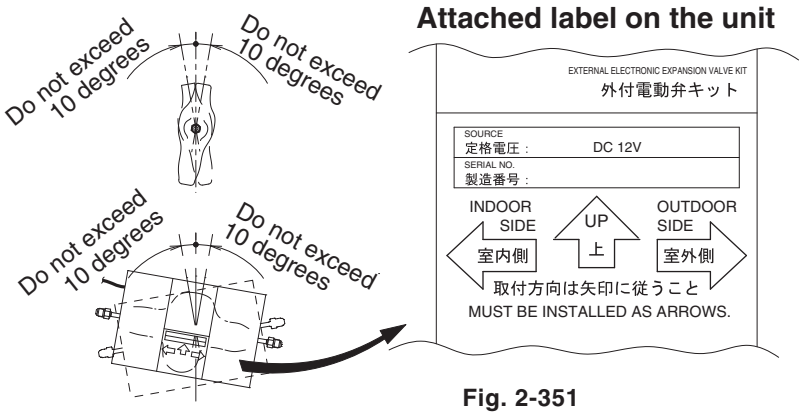

Fig. 2-351

- Tightening flare nuts

CAUTION

Be sure to use 2 spanners together when removing or tightening the flare nuts. After connection with the tubing, tighten the flare nuts by the correct torque. Failure to tighten the nuts correctly can cause loosening and damage on the flared portion, resulting in accidents by oxygen deficiency due to refrigerant leaks.

Tubing size	Tightening torque
ø6.35 (1/4")	14~ 18 N · m {140~180 kgf · cm}
ø9.52 (3/8")	34~ 42 N · m {340~ 420 kgf · cm}

4. Flare Insulation of Tubing

After completing a leakage test, apply heat insulation. (Fig. 2-352)

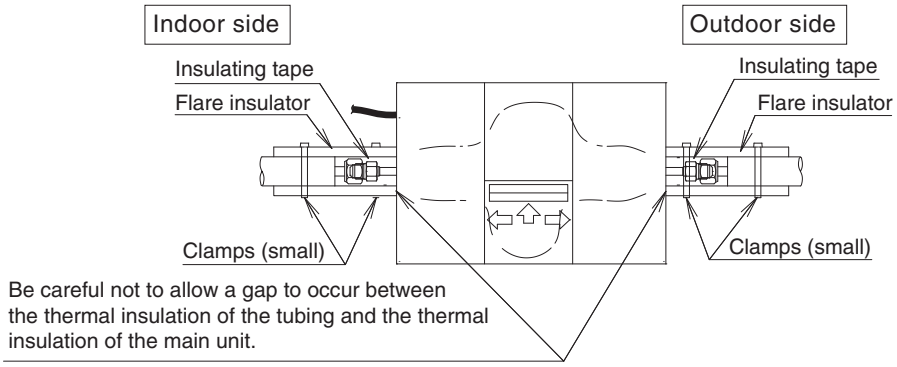

* Use the flare insulator provided with the product.

Fig. 2-352

7. Optional Parts

5. Securing the External Electronic Expansion Valve After Connection with Tubing

After connection with tubing, secure the external electronic expansion valve using the supplied clamps (large) to hold it against the gas tube. (Fig. 2-353)

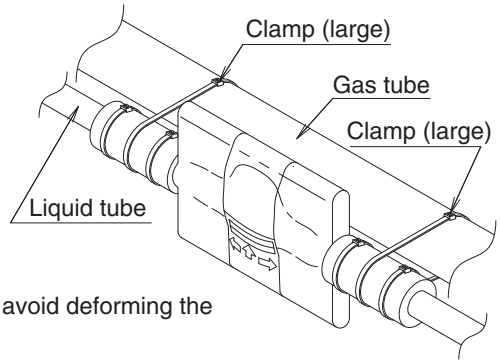

NOTE

Be careful not to tighten the clamps with excessive force, in order to avoid deforming the tubing or other parts.

Fig. 2-353

Wiring Procedure

WARNING **Be sure to turn the power off at the mains before removing or connecting connectors to avoid electric shock hazard.**

- **Connection of External Electronic Expansion Valve with Extension Cord**

(1) Turn the power off.

(2) Turn the power on. (This step is unnecessary if the model does not have an electronic expansion valve.)

(3) Wait 1 minute after the power is on and then turn the power off again at the mains.
(This step is unnecessary if the model does not have an electronic expansion valve.)
* The electronic expansion valve becomes full-open in the 1 minute.
Do not give instructions for operation through the remote control during this time.

(4) Open the electrical component box. From the control PCB, disconnect the connector to the indoor unit internal electronic expansion valve. (This step is unnecessary if the model does not have an electronic expansion valve.)

(5) Connect the external electronic expansion valve. (Fig. 2-354)
Connect the external electronic expansion valve connector to the indoor unit control PCB (PMV or T6).
After completing the wiring process, close the cover of the electrical component box.
* With some models that do not include an electronic expansion valve, a relay connector is included. Connect this relay connector.

(6) Turn the mains power breaker back on.
This procedure is now completed.

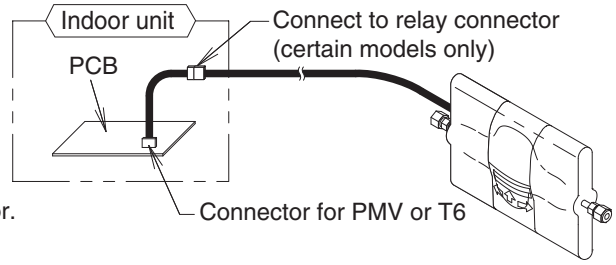

Fig. 2-354

Wiring Procedure (Using the Attached Cable)

Depending on the model of indoor unit that is connected, this product may require the use of a supplied connector-converter cable. Refer to the below for the corresponding units and the method of use.

- **If the indoor unit control PCB has a 5P plug, use the supplied connector-converter cable.**
- **Using the connector-converter cable**
The connector-converter cable is used by connecting it to the extension cable (8 m) that runs from the electronic expansion valve unit. (Refer to Fig. 2-355.)
After connecting the connector-converter cable, follow the above wiring procedure and connect the cable to the indoor unit control PCB.
* Depending on the model, a relay connector may be connected on the indoor unit control PCB. If this supplied cable is used, disconnect the relay connector and connect the supplied cable directly to the indoor unit control PCB.

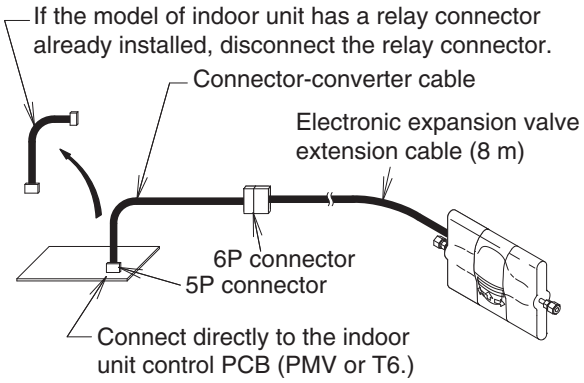

Fig. 2-355

7. Optional Parts

7-4. Filter Chamber for Indoor Unit

■ CZ-FDU2

Installation Instructions

1. Accessories

● Check that the following parts are in the box when unpacking.

Supplied parts	Q'ty	Remarks	Supplied parts	Q'ty	Remarks
Installation screws (5x40)	4	Fixture for filter chamber	Short-circuit connector	1	
Washer	4	Fixture for filter chamber	Instructions	Each	Installation Instructions, Fan tap

2. Installation

NOTE

1. **Be careful handling the unit when installing it inside the ceiling. Use particular care to avoid allowing any impact to strike the side of the filter chamber, as this can result in damage.**
2. Remove the cardboard inserted in the air outlet (4 locations) before installation.

(1) Installing Filter Chamber (Fig. 2-356)

● Align the black sealing material on the filter chamber with the indoor unit. (The filter chamber must be installed in a specific direction, therefore align the shape of the filter chamber with the shape of the indoor unit.)

● Fasten with the supplied installation screws (x4).

(2) Installing Indoor Unit

● Install the indoor unit (attached to the filter chamber) in the ceiling. (Install the indoor unit according to instructions supplied with the indoor unit.)

(3) Installing Ceiling Panel (Fig. 2-357)

● Install the ceiling panel to the chamber. (Install the ceiling panel according to instructions supplied with the ceiling panel.)

● First cut off the bundled clamper and insert the ceiling panel 22P (white) connector into the through-hole of the chamber. Then connect it to the 22P connector in the electric component box.

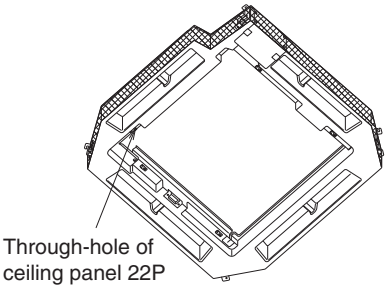

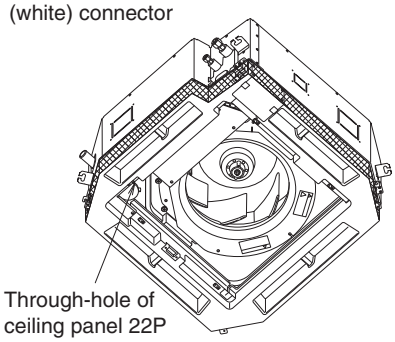

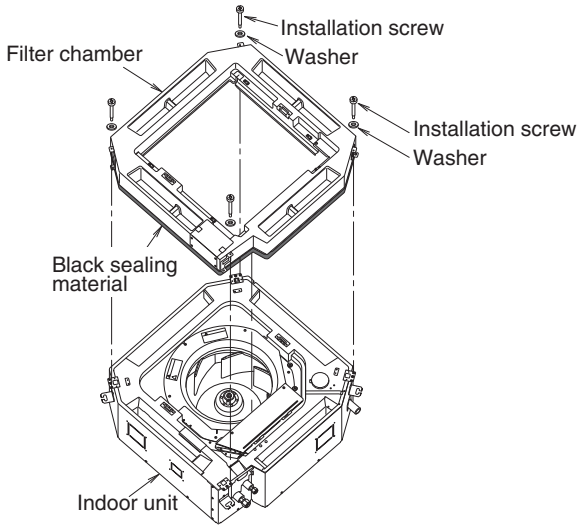

Fig. 2-356

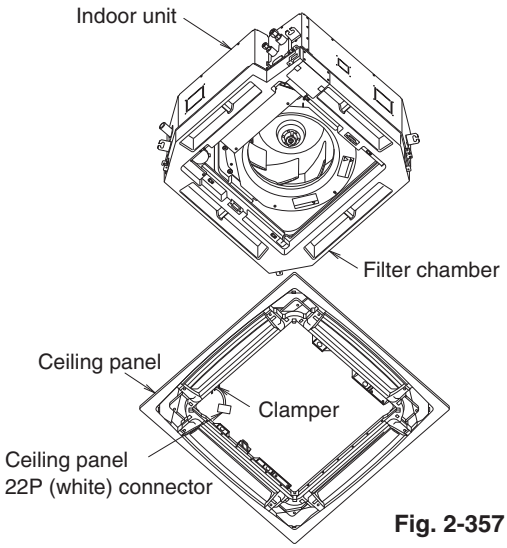

Fig. 2-357

7. Optional Parts

7-5. Air Intake Kit for Chamber

■ CZ-ATU2

Duct connection box

Installation Instructions

1. Accessories

● Check that the following parts are in the box when unpacking.

Supplied parts	Q'ty	Remarks
Duct connection box	1	
Duct connection box installation bracket	1	
Installation flange (ø100)	1	Duct flange
Instruction screw	14	
Thermal insulation for installation screws A	2	Polyethylene foam T2
Thermal insulation for installation screws B	2	Polyethylene foam T5

2. Installation

NOTE

Install the duct connection box after installing the indoor unit. Also, because the duct connection box is attached to the air-intake plenum, use sufficient care when handling it. Especially avoid any impacts on the side of the air-intake plenum, as this can result in damage.

● Follow the instructions in the air-intake plenum installation instructions and install the air-intake plenum on the indoor unit.

(1) Remove the sealing plate from the air-intake plenum.

(2) Fit the duct connection flange and installation bracket into the duct connection box.
Fasten with the supplied 8 installation screws.

(3) Fasten the duct connection box to the air-intake plenum with the 6 installation screws.

(4) Apply the supplied thermal insulation A and B to the installation screws.

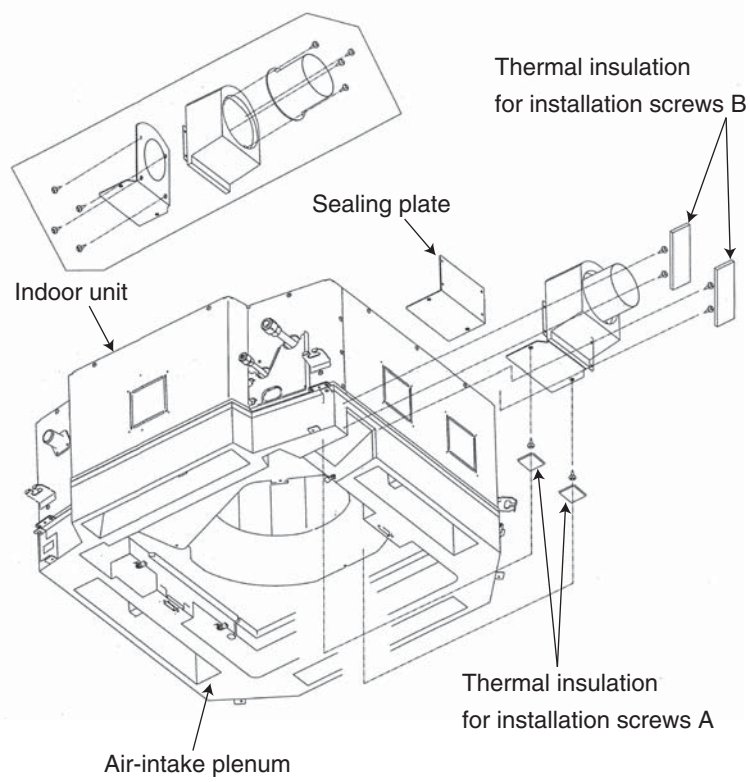

7. Optional Parts

7-6. Air Intake Kit for Unit

■ CZ-BCU2

Installation Instructions

1. Accessories

Supplied parts	Q'ty	Supplied parts	Q'ty	Supplied parts	Q'ty
Connecting box for main unit	1	Instructions	1	Installation screw (4 x 10)	4
Sealing insulation "A"	2	Sealing insulation "B"	2	Duct connection flange (ϕ100, for fresh air intake)	1

2. Installation

(1) Cut and remove the sheet-metal together with an insulation (styrofoam) with a nipper or a cutter knife paying attention to the incision as a marker on the indoor unit. (Fig. 2-358)

NOTE

When cutting out the styrofoam, do not insert the blade more than 30mm depth. (If the inside of the drain pan is damaged, this will result in water leakage.)
Also, be careful not to let the chips invade the unit.

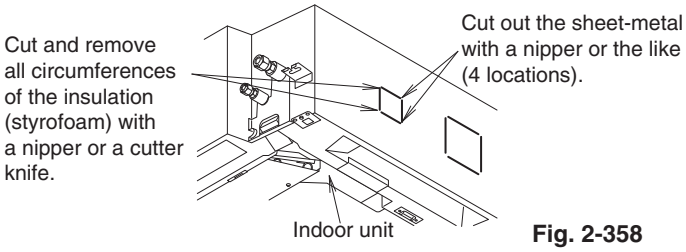

Fig. 2-358

(2) Peel off the insulation of the shaded portion and insert the connecting box for the main unit from the air outlet of the main unit. (Fig. 2-359)

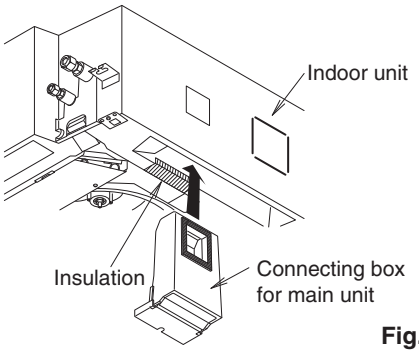

Fig. 2-359

(3) If there is a space between the styrofoam and the sheet-metal, this will result in condensation forming.
First seal the supplied insulation "A" to meet the hole of the screw and then seal that of "B". (Fig. 2-360)

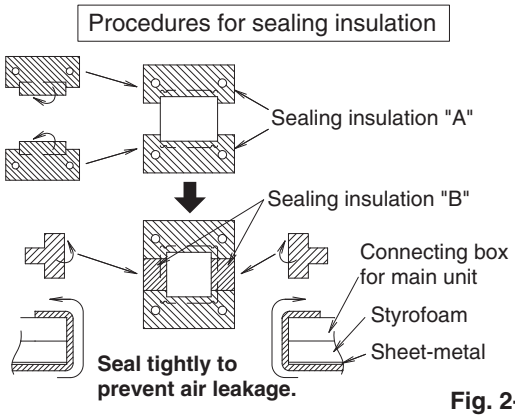

Fig. 2-360

(4) Fasten the flange to the indoor unit supplied with the installation screws (x4). (Fig. 2-361)

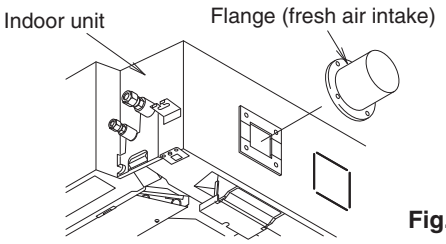

Fig. 2-361

7. Optional Parts

7-7. Air Cut Insulation

■ CZ-CFU2

Installation Instructions

Use this part to close air flow when setting 3-way or 2-way air discharge, or connecting the duct connection flange (ϕ150) according to the situation of the unit installation.

NOTE

When using an optional high-performance filter, a filter grille or a natural evaporation type humidifier, it is impossible to shift the 3-way or 2-way air discharge or make a connection of duct connection flange (ϕ150).

1. Applicable Model & Use

Model	Use
CZ-CFU2	● Close off in case of 3-Way or 2-Way Air Discharge ● Close off in case of connecting the duct connection flange (ϕ150)

2

2. List of Parts

Model	Supplied parts	Dimensions	Shape	Q'ty
CZ-CFU2	Part to close air flow	490 ×70× T40	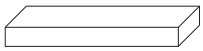	2
	Packing	650 ×100× T2		2
	Short-circuit connector			1
	Instructions		Instructions & Change Procedures of DC Fan Tap 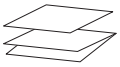	2

3. Installation

When using the part to close air flow, follow the change procedures of DC Fan Tap and change the fan tap. If not changed, air discharge temperature in the cooling mode drops due to the reduction in airflow. This may result in condensation forming.

(1) Indoor Unit Installation

● Install the indoor unit in the ceiling. (Install the indoor unit according to instructions supplied with the indoor unit.)

(2) Cut off the part to close air flow and the packing according to the installation dimensions as shown in the right table.
Be careful as the dimensions are different due to the installation location.
Be careful they should be no shorter than the installation dimensions. The excessive cut may result in condensation forming.

(3) Part to close air flow Installation

●Insert the part to close air flow into the air outlet (styrofoam) of the indoor unit and apply the packing and close.
(See Fig. 2-362 and Fig. 2-363.)

● Paste the packing to cover the internal styrofoam in the unit more than 15mm. (If not covered over 15mm, this may result in condensation forming.)

unit : mm

Installation location	Name	Installation dimension
①	Part to close air flow	450×70
	Packing	490×100
②	Part to close air flow	490×70
	Packing	610×100
③	Part to close air flow	490×70
	Packing	650×100
④	Part to close air flow	400×70
	Packing	620×100

7. Optional Parts

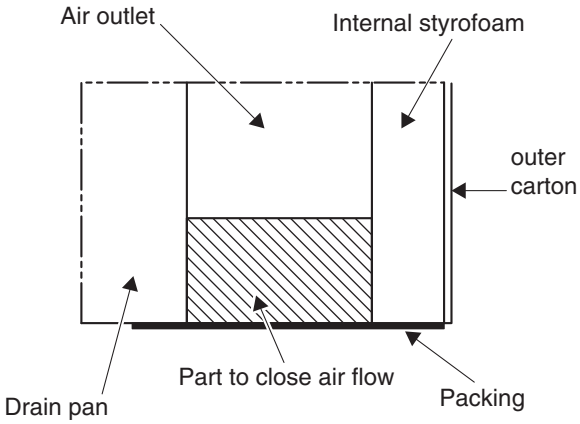

(Fig. 2-362)

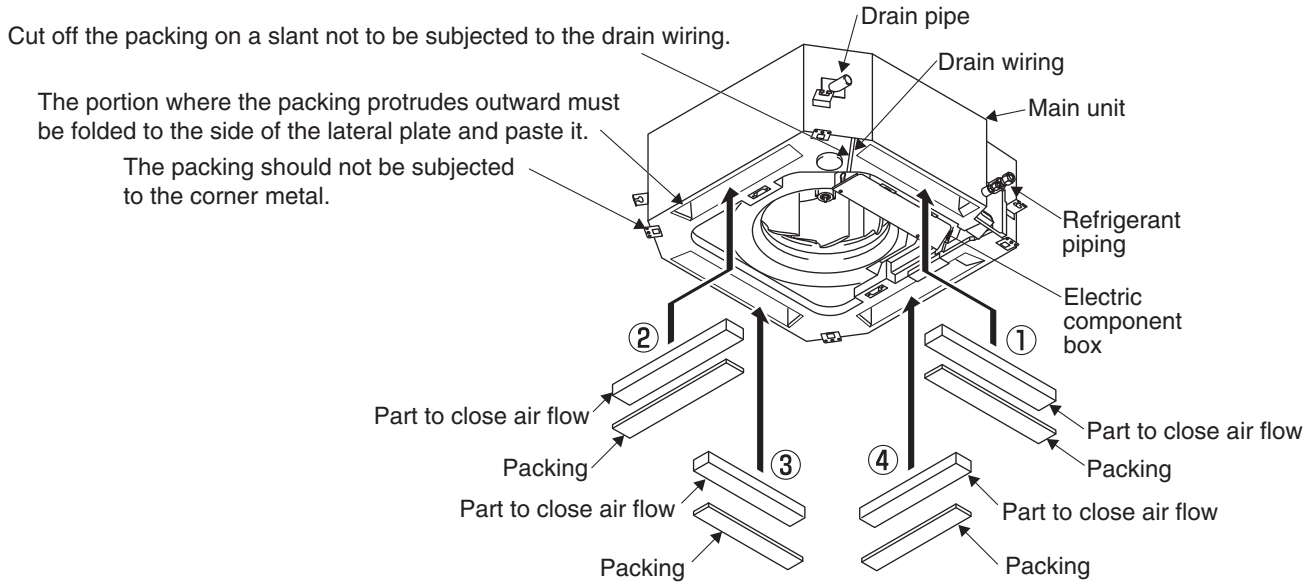

(Fig. 2-363)

(4) Block Pattern of Air Outlet (seen from the unit bottom)

- In case of 3-way or 2-way air discharge and connecting the duct connection flange (ϕ150), block the air outlet according to the block pattern of air outlet as shown on the next page. Also, select the appropriate piping position referring to the following table. (See Fig. 2-364 to correctly understand the illustration.)

NOTE	Be careful not to cause condensation, cool wind leak and insulation shortage when installing the duct connection flange (ϕ150).

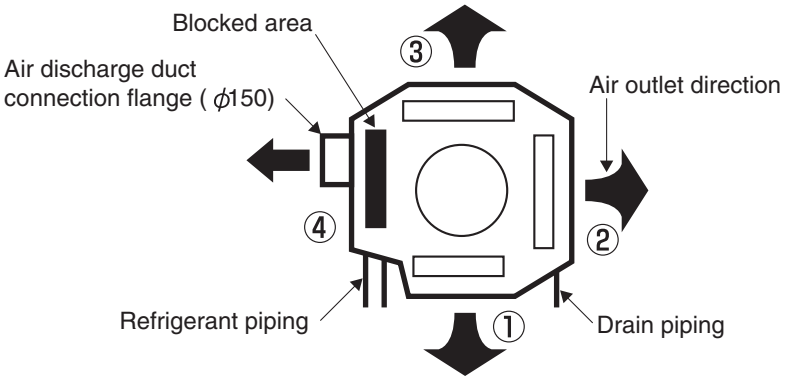

(Fig. 2-364)

7. Optional Parts

- Do not apply any other block pattern of air outlet as listed below.

3-way air discharge Capable of blocking 1 direction	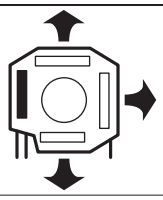	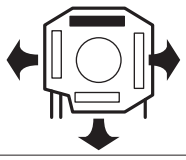	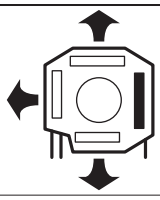	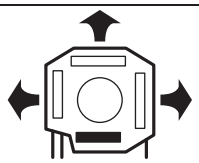
2-way air discharge Capable of blocking 2 directions	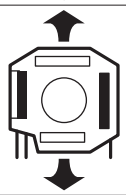	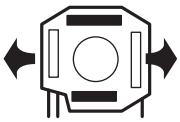	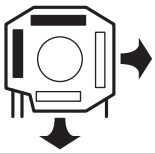	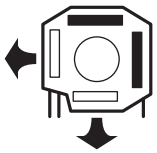
	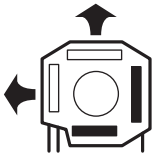	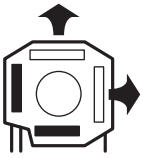		

3-way air discharge + connecting air outlet duct connection flange (ϕ150)
Block one of the air outlet and connect the duct connection flange.
Then the air is discharged from the air discharge duct connection flange.

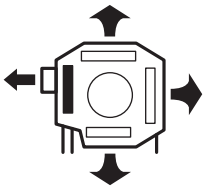	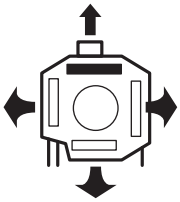	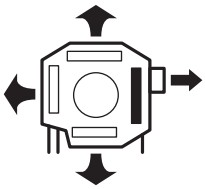	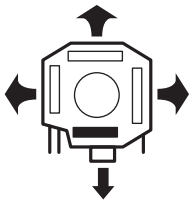

2-way air discharge + connecting air outlet duct connection flange (ϕ150)
Block two (2) air outlet and connect either of the duct connection flanges. Then the air is discharged from the air discharge duct connection flange. There is, however, only capable of discharging the air from one set of air outlet duct connection flange.

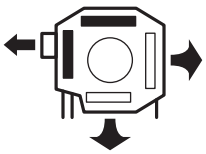	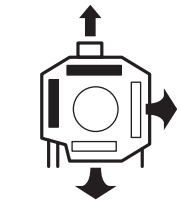	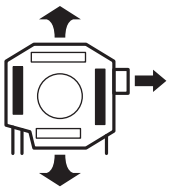	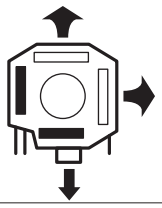
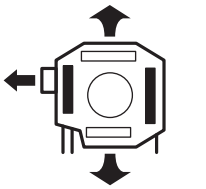	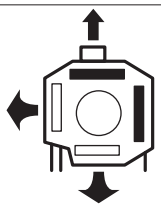	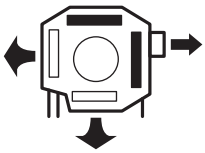	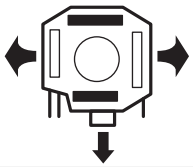
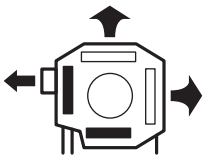	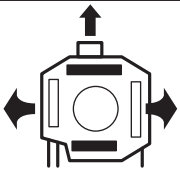	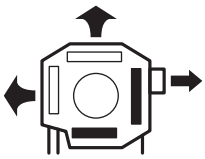	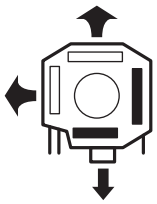

(5) Setting Changes of DC Fan Tap

- Make settings of the wired remote control, timer remote control or indoor unit control P.C. board (using supplied short-circuit connector) according to separate instructions.
- Make settings of 3-way air discharge and 2-way air discharge according to separate instructions.

8. How to select AHU system

AHU system selection guideline

● System lineup

Capacity	Outdoor combination			Connectable AHU-kit combination		
28 kW	U-10ME1E81	—	—	CZ-280MAH1	—	—
56 kW	U-20ME1E81	—	—	CZ-560MAH1	—	—
84 kW	U-16ME1E81	U-14ME1E81	—	CZ-560MAH1	CZ-280MAH1	—
112 kW	U-20ME1E81	U-20ME1E81	—	CZ-560MAH1	CZ-560MAH1	—
140 kW	U-18ME1E81	U-16ME1E81	U-16ME1E81	CZ-560MAH1	CZ-560MAH1	CZ-280MAH1
168 kW	U-20ME1E81	U-20ME1E81	U-20ME1E81	CZ-560MAH1	CZ-560MAH1	CZ-560MAH1

*Mix connection with standard indoor units is not allowed.
*Applicable system is only above. (2way VRF system, ME1E81 series)

● System Overview

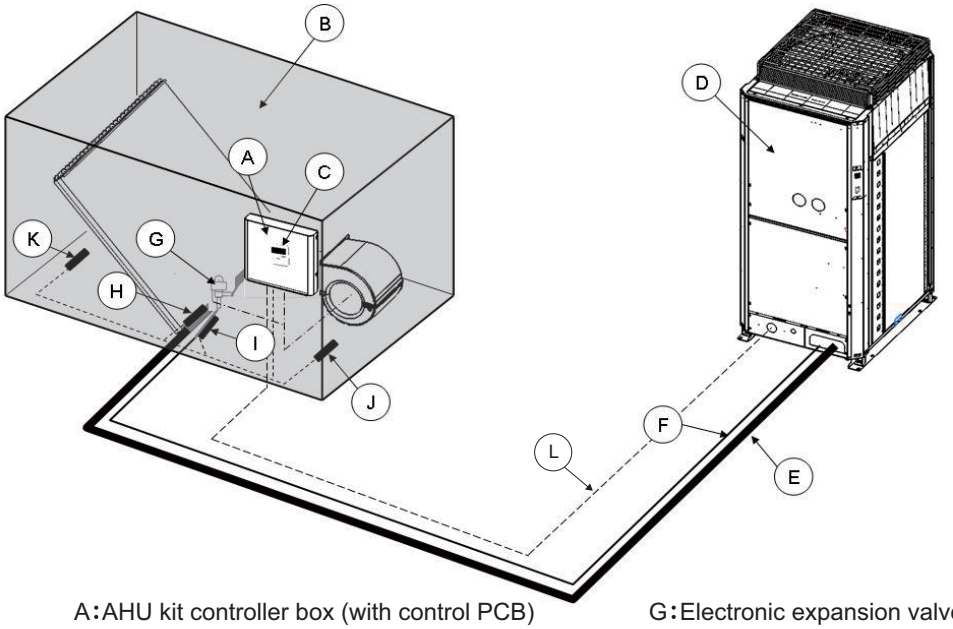

A：AHU kit controller box (with control PCB)
B：AHU unit (Field supplied)
C：Remote controller for AHU kit (Option accessory)
D：Outdoor unit
E：Gas piping (Field supplied)
F：Liquid piping (Field supplied)
G：Electronic expansion valve
H：Thermistor for Gas pipe
I：Thermistor for Liquid pipe
J：Thermistor for Suction air
K：Thermistor for Discharge air
L：Inter-unit wiring

* In case of 84kW or more capacity system, system requires 2 or 3 AHU kits and heat exchangers. Connection and setting of multiple AHU kits and heat exchanger are same as normal indoor unit. ex) There are 3 AHU kits and heat exchanger. Main piping should be distributed to 3 paths. PCB setting "No. of indoor unit" of outdoor unit (master) should be set to "3".

● Piping design regulation

・Connecting pipe dimension to heat exchanger of AHU

Capacity	Model name	Liquid pipe	Gas pipe
28kW	CZ-280MAH1	Ø9.52mm	Ø22.22mm
56kW	CZ-560MAH1	Ø15.88mm	Ø28.58mm

・Main piping diameter

System size	Liquid pipe	Gas pipe
28 kW	Ø9.52mm	Ø22.22mm
56 kW	Ø15.88mm	Ø28.58mm
84 kW	Ø19.05mm	Ø31.75mm
112 kW	Ø19.05mm	Ø38.10mm
140 kW	Ø19.05mm	Ø38.10mm
168 kW	Ø19.05mm	Ø38.10mm

8. How to select AHU system

- System piping length
  Max. piping length: 100m (actual) / 120m (equivalent)
  Difference between longest and shortest piping from first branch: 10m
  Max. length of branch tubing: 12m
  * Other conditions to be referred the standard piping design regulations.

● Installation
- Expansion Valve
  If there are multiple heat exchanges in one system, each heat exchanger requires expansion valve that is in the AHU kit.

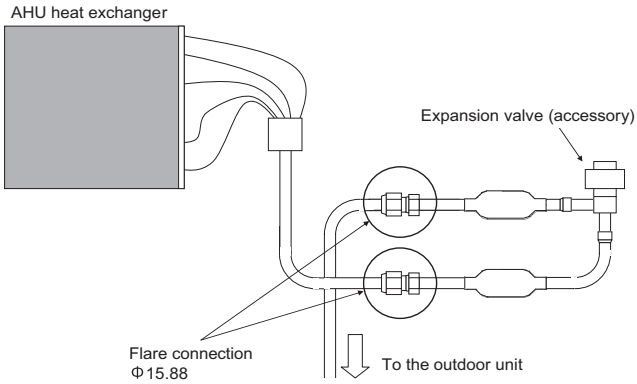

For 10HP AHU, piping to the outdoor unit is ø9.52. Reduce the piping size in the field.

- Thermistor for Gas and Liquid Pipe
  If there are multiple heat exchanges in one system, each heat exchanger requires these thermistors that is in the AHU kit.

Gas thermistor

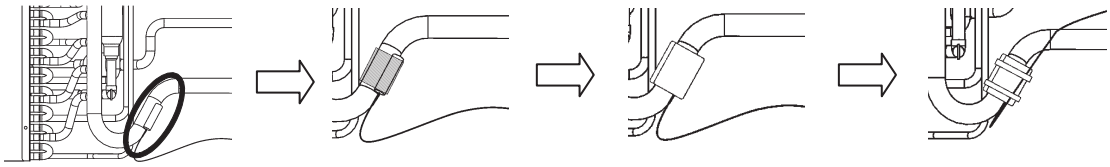

Attach the gas thermistor to the gas pipe of collecting gas pipe in heat exchanger.

Cover the thermistor and pipe with aluminum tape.

Cover the aluminum tape with thermal insulation.

Thermal insulation and wiring are fixed in two bands.

Liquid thermistor

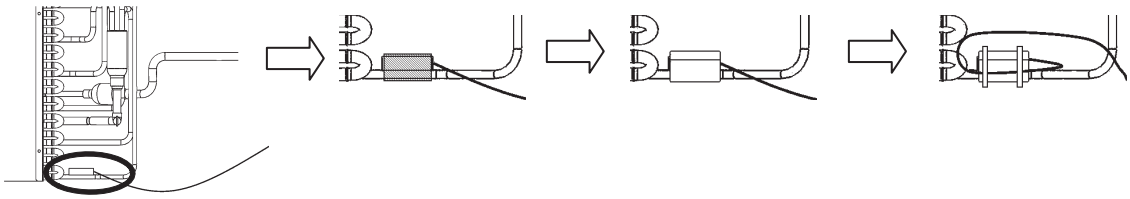

Attach the liquid thermistor to the liquid pipe located in the lowest position after distributer in heat exchanger.

Cover the thermistor and pipe with aluminum tape.

Cover the aluminum tape with thermal insulation.

Thermal insulation and wiring are fixed in two bands.

8. How to select AHU system

- Blower operation signal and protection signal

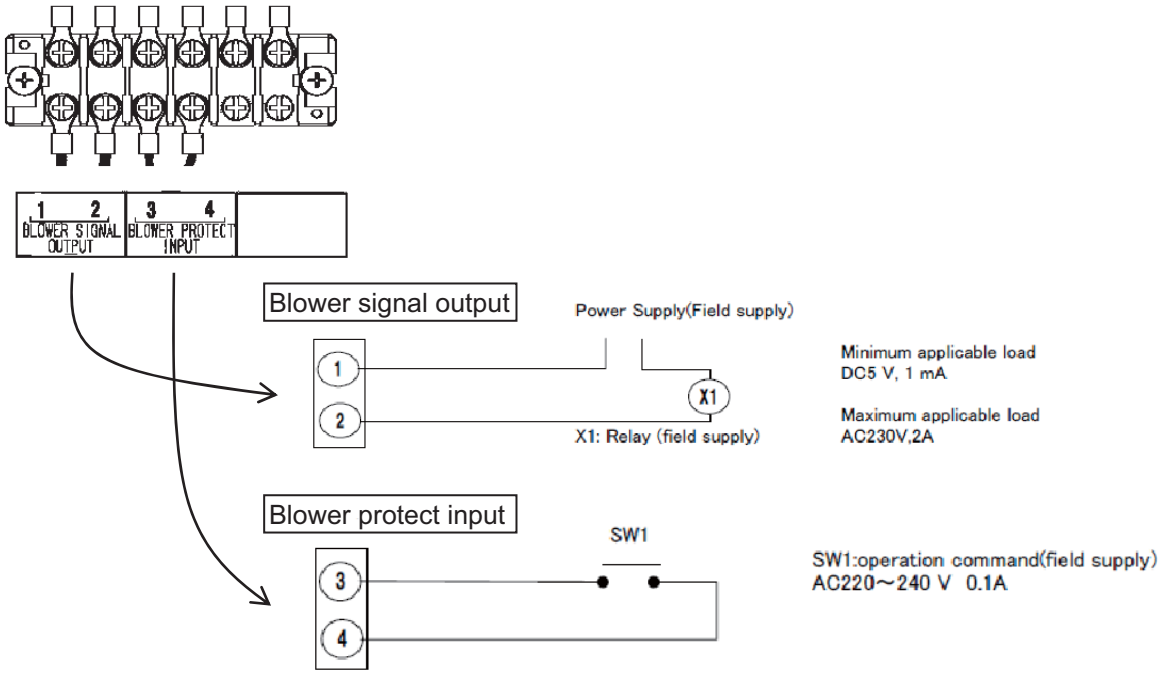

● Limitation of AHU
When the AHU is selected, there are some limitations.

- The limitation of temperature range is below.

		Cooling	Heating
Outdoor temperature	Min.	-10 ℃(DB)	-20 ℃(WB)
	Max.	43 ℃(DB)	15 ℃(WB)
Inlet air temperature (to the heat exchanger)	Min.	18 ℃(DB)	0 ℃(DB)
	Max.	32 ℃(DB) / 23℃(WB)	30 ℃(DB)

- The limitation of heat exchanger volume and air volume is shown in below table 1 & 2.

Table 1: Inside volume of heat exchanger

Capacity (Cooling)	kW	28.0	56.0	84.0	112.0	140.0	168.0
Max. volume of Hex	dm^3	5.4	10.7	16.1	21.4	26.8	32.1
Min. volume of Hex	dm^3	2.8	5.6	8.4	11.2	14.0	16.8

Table 2: Air volume of AHU

Capacity (Cooling)	kW	28.0	56.0	84.0	112.0	140.0	168.0
Max. air volume	m^3/h	3500	7000	10500	14000	17500	21000
Min. air volume	m^3/h	5000	10000	15000	20000	25000	30000

But in addition, system requires other complex limitation like pressure loss, sufficient pressure of refrigerant, etc.
An appropriate AHU can be easily selected by using software named "AHU for VRF.exe".

8. How to select AHU system

● How to use the software "AHU for VRF"

1. Execute the software "AHU for VRF.exe"

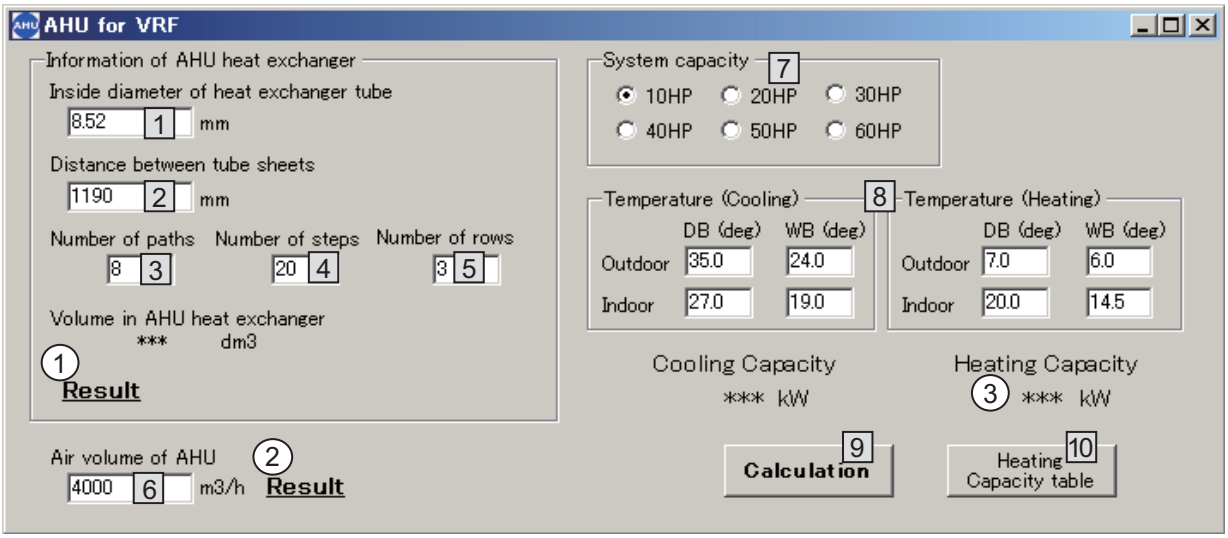

2. Input the specification of heat exchanger, air volume, capacity and temperature at heating.

[1] Input inside diameter of tube not outside diameter.
All the tubes of a heat exchanger must be the same inside diameter.

[2][3][4][5] Input distance between tube sheets, No. of paths and steps and rows.
From above information, software calculates the inside volume and pressure loss of heat exchanger.
Inside volume of heat exchanger must be between the two values in table 1.

[6] Input air volume of AHU.
Air volume must be in the range shown at table 2.

[7] Select the system capacity.
Check the system size from 10HP to 60HP listed in the box.

[8] Input the temperature condition.
It is for confirming the abnormal situation in heating mode.
At a low temperature condition, heating operation may not be possible.

[9] Push the Calculation button.

3. Check the results
The results are shown in three places.

(1) Results of inside volume and pressure loss of heat exchanger
*Case "NG":
Inside volume of heat exchanger is out of range shown at table 1.
Change the value excluding No. of paths.
*Case "NG(Pressure loss is high)":
Pressure loss, especially in cooling operation, is high.
Change the value of "No. of paths".

(2) Results of air volume
*Case "NG":
Air volume of AHU is out of range shown at table 2.
Change the value.

8. How to select AHU system

③ Heating operation check.
*Case "NG":
This is the case which AHU system cannot perform suitable operation.
The main causes are the following three points.
1) Outdoor tempearture is low.
2) Indoor temperature is low.
3) Air volume is high.
Change the above value mainly.
*In case of some value displayed:
This is the performance in this condition. 8

10 Push the "Heating Capacity table" button.
It is possible to confirm the capacity table in heating mode.
Data is saved as "temp heat.csv" at the same folder of the software.

	A	B	C	D	E	F	G	H	I
1	System capacity: 10 HP								
2	Inside diameter of HEX: 8.52 mm								
3	Distance between tube sheets: 1190 mm								
4	No of paths: 8								
5	No of steps: 20								
6	No of rows: 3								
7	Air volume: 5000 m3/h								
8									
9	Heating Capacity table(kW)								
10			Indoor temperature(DB)						
11			15	17	19	20	21	23	25
12	Outdoor	-20	NG	NG	NG	NG	22.6	21.1	19.5
13	temp(WB)	-15	NG	27.1	25.6	24.8	24	22.4	20.8
14		-10	30.2	29.1	27.5	26.7	25.9	24.2	22.5
15		-5	32.2	31.7	30.1	29.2	28.3	26.5	24.7
16		-2.5	33.5	32.9	31.7	30.8	29.9	28	25.7
17		0	34.9	34.2	32.7	31.5	30.3	28	25.7
18		2	35.9	35	32.7	31.5	30.3	28	25.7
19		5	37.3	35	32.7	31.5	30.3	28	25.7
20		6	37.3	35	32.7	31.5	30.3	28	25.7
21		7.5	37.3	35	32.7	31.5	30.3	28	25.7
22		10	37.3	35	32.7	31.5	30.3	28	25.7
23		15	37.3	35	32.7	31.5	30.3	28	25.7

If "NG" is displayed, the system cannot perform normal operation in heating mode on this condition.

– MEMO –

Contents

3. Control of 2WAY SYSTEM

1. Main Operating Functions 3-4
1. Room Temperature Control 3-4
2. Automatic Control for Heating and Cooling 3-5
2. Wireless Remote Controller 3-6
1. Optional Controller (Remote Controller) 3-6
2. How to Install the Wireless Remote Controller Receiver 3-17
■ Common to All Models 3-17
■ CZ-RWSU2 3-19
■ CZ-RWST2 3-21
■ CZ-RWSL2 3-24
■ CZ-RWSC2 3-27
■ CZ-RWSY2 3-31
■ Common to All Models 3-33
3. Timer Remote Controller 3-35
Timer Remote Controller / CZ-RTC2 3-35
■ How to Use the Timer Remote Controller 3-35
■ Names and Operations 3-36
■ Setting the Present Time 3-38
■ Weekly Program Function 3-39
■ Outing Function 3-44
■ Sleeping Function 3-46
■ INSTALLATION MANUAL FOR TIMER REMOTE CONTROLLER 3-48
■ How to install the remote controller 3-48
■ Group control using 2 remote controllers 3-49
■ Remote controller setting mode 3-49
■ Indoor unit setting mode 3-49
■ To display the sensor temperature: 3-49
■ To display the trouble history: 3-49
■ Meaning of Alarm Messages 3-51
4. Simplified Remote Controller 3-54
Simplified Remote Controller / CZ-RE2C2 3-54
■ Important Safety Instructions 3-54
■ Names and Operations 3-55
■ Outing Function 3-57
■ Basic Installation 3-58
Simplified Remote Controller / CZ-RELC2 3-62
■ Important Safety Instructions 3-62
■ Names and Operations 3-63
■ Basic Installation 3-65
5. System Controller 3-67
System Controller / CZ-64ESMC2 3-67
■ Functions of Buttons 3-67
■ Display 3-70
■ How to Start Group Operation 3-71
■ How to Start Collective Operation 3-72
■ How to Install the System Controller 3-73
■ Overview of the System Controller 3-74
■ Installation Procedure 3-75
■ Layout of Electrical Terminals 3-76
■ Basic Wiring Diagram 3-77
■ Address Switch Setting 3-78
■ Mode Setting 3-81
■ How to Perform Zone Registration 3-82
■ Zone Registration Table 3-83
■ How to Check Overlapping of Central Address Nos. 3-86
■ Memory Back-Up Switch 3-86
■ Test Run 3-86
■ System Examples 3-87

Contents

6. Schedule Timer 3-89
Schedule Timer / CZ-ESWC2 3-89
■ Operation Buttons 3-89
■ Display 3-90
■ Using the Schedule Timer 3-90
■ Setting the Present Time 3-91
■ Setting Today's Day of the Week 3-92
■ Setting Up Programmed Operations 3-93
■ Setting Errors 3-95
■ How to Check Program Times 3-96
■ How to Copy Program Times 3-97
■ How to Copy Group Programs 3-99
■ How to Set Holidays in a Scheduled Week of Operation 3-101
■ How to Clear Programs 3-103
■ Schedule Timer and Air Conditioner Operation 3-104
■ Power Outage 3-105
■ Troubleshooting 3-106
■ Accessories for Schedule Timer 3-107
■ Installing the Schedule Timer 3-107
■ Installation of Connected Schedule Timers 3-108
■ Wiring the Schedule Timer 3-108
■ About the Setting Switches 3-110
■ Creating Timer Groups 3-111
■ Memory Back-Up Switch 3-112
■ Checking the Central Control Addresses and Operating the Units that are Controlled by the Schedule Timer 3-112
■ Explanation to Customers 3-112
■ Installation Work Plan 3-113
7. ON/OFF Controller (CZ-ANC2) 3-114
1. How to Use the ON/OFF Controller 3-114
■ Functions of buttons 3-114
■ How to use the nameplate 3-115
2. Installation Instructions 3-116
■ General 3-116
■ Installation site selection 3-116
■ How to install the ON/OFF controller 3-116
■ Dip switch setting 3-121
■ Zone address setting 3-123
■ How to perform zone registration 3-124
■ How to check overlapping of central address no. 3-129
■ System examples 3-130
8. Intelligent Controller (CZ-256ESMC2) 3-132
1. Operation Manual 3-132
2. Access and Operation by Web Browser 3-183
9. Communication Adaptor (CZ-CFUNC2) 3-193
Instructions for the Electrical Installer 3-193
1. Installing 3-193
2. Wiring 3-194
3. Precautions for the Communication Adaptor control wire 3-195
4. Setting the Communication Adaptor board 3-196
5. Connecting to external equipment 3-199
6. Outer dimensions 3-199
7. Specifications 3-199
Appendix A. Connecting to an Intelligent Controller 3-200

Contents

10. Remote Sensor 3-201
Remote Sensor / CZ-CSRC2 3-201
■ Parts Supplied with Remote Sensor 3-201
■ Remote Sensor Installation Guidelines 3-201
■ How to Install the Remote Sensor 3-202
■ How to Wire the Remote Sensor 3-203
■ Important Information When Using Together with Remote Controller Switch 3-203
11. LonWorks Interface (CZ-CLNC2) 3-204
1. LonWorks Interface Overview 3-205
2. Procedures for Installation (Electrical Work) of LonWorks Interface 3-207
3. Assigning Central Control Addresses 3-211
4. LonWorks Interface Test Run 3-212
5. Checking the LonWorks Interface Version 3-213
6. List of LonWorks Network Variables 3-214
7. Details of LonWorks Network Variables 3-215
8. Locations Where Neuron ID is Applied 3-218
12. Seri-Para I/O unit for outdoor unit (CZ-CAPDC2) 3-219
1. Installing the Seri-Para I/O Unit for outdoor unit 3-220
2. Wiring for the Seri-Para I/O Unit for outdoor unit 3-220
3. Setting Switches 3-229
4. Detailed Explanation of Address Setting SW (S02) 3-232
5. Test Run 3-232
6. External Dimensions 3-233
7. Product Specifications 3-233
13. Seri-para I/O Unit for each indoor unit (CZ-CAPBC2) 3-234
14. Interface Adaptor (CZ-CAPC2) 3-242
15. Web Interface (CZ-CWEBC2) 3-249
1. Important Safety Instructions 3-252
2. Features of the System 3-256
3. System Configuration 3-257
4. Names and Functions of Parts 3-258
5. Preparations and Login 3-261
6. Status / Control 3-265
7. Maintenance 3-270
8. Initial Settings 3-273
9. Auxiliary Settings 3-284
10. Supplementary Information 3-294
11. Troubleshooting 3-297
12. Care 3-299
13. Specifications 3-300
Installation (Electric) and Service Instructions 3-301
16. Intelligent Management System 3-305
1. Basic Software (CZ-CSWKC2) 3-305
2. Distribution Ratio Software (CZ-CSWAC2) 3-356
3. Web Software (CZ-CSWWC2) 3-386
4. Layout Display Software (CZ-CSWGC2) 3-419
5. BACnet™ Software (CZ-CSWBC2) 3-442

1. Main Operating Functions

1. Room Temperature Control

The thermostat is turned ON/OFF according to ▲T as shown below.

▲T = Room temperature - Set temperature	
When remote controller sensor is used	Room temperature = Temperature detected by the remote controller sensor
When body sensor is used	Room temperature = Temperature detected by the body sensor - Intake shift temperature*

* Intake shift temperature (enabled only during heating)

During heating, a difference in temperature occurs between the top and bottom of a room. This value is set in consideration for the difference between the temperature detected by the body sensor and the temperature at the bottom of the room.
<Value set for intake shift temperature at time of shipment>: 4°C

Note: The shift temperature can be selected in the range of 0 – 10°C, by using the remote controller simplified setting mode.

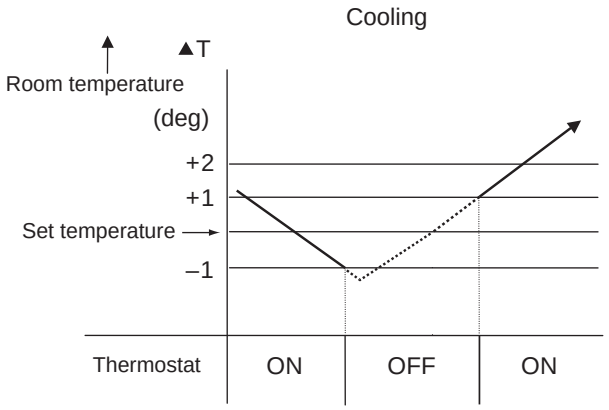

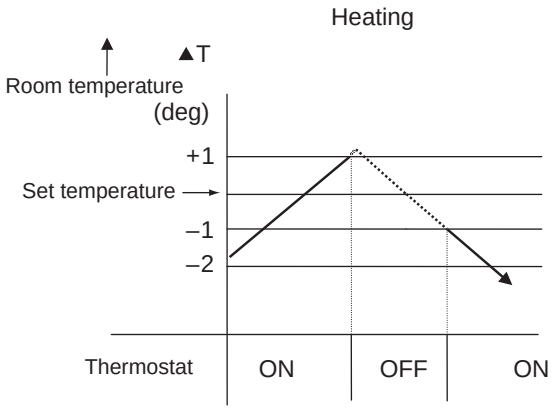

3

(1) After the thermostat turns ON, it will not turn OFF again as a result of ▲T for 5 minutes.

(2) After the thermostat turns OFF, it will not turn ON again for 3 minutes. (It also will not turn ON for 3 minutes after the power is switched ON.)

(3) The compressor turns OFF if the mode is changed cooling → heating (or heating → cooling) while the compressor is ON.

(4) If “test run” mode is selected, the thermostat will not turn OFF as a result of ▲T for 60 minutes. (The thermostat is forced ON.)

1. Main Operating Functions

2. Automatic Control for Heating and Cooling

Automatic Heating/Cooling Control

- This function is only valid as long as one indoor unit is installed within one refrigerant system or all indoor units are controlled within a group control.
- When operating in a group control, the sub-indoor units become the same operation mode of the main unit.
- As for the indoor units in a group control, install them in the same air conditioning circumstances.
- Use the temperature sensor which is built-in sensor of the indoor unit.

(1) When operation starts, heating or cooling is selected according to the set temperature and the room temperature.
- Room temperature ≥ Set temperature + 1 → Cooling
- Set temperature – 1 < Room temperature ≤ Set temperature + 1 → Monitoring mode (*1)
- Room temperature < Set temperature – 1 → Heating

*1: If the difference between the room temperature and set temperature is small when operation starts, the cooling thermostat remains in standby status (OFF) until the temperature difference increases. When the temperature difference increases, either cooling operation or heating operation is selected. This standby status is known as "monitoring mode."

(2) After operation starts in the selected operating mode, the set temperature is automatically shifted by +2°C (cooling operation) or –2°C (heating operation).

Example: Temperature set on the remote controller is 20°C.

	Selected operating mode	Shifted set temp.	Remote controller display
1	Cooling	22°C	20°C
2	Heating	18°C	20°C

(3) Operating mode changes (heating → cooling, cooling → heating) which occur during operation as a result of temperature changes are handled as shown below.
- Heating → cooling: Room temperature → Shifted set temperature (set temperature + 2°C) + 0.5°C
- Cooling → heating: Room temperature → Shifted set temperature (set temperature – 2°C) – 1.0°C

Example: Temperature set on the remote controller is 20°C.

	Operating mode change	Shifted set temp.
1	Heating → Cooling	20 + 2 + 0.5 = 22.5°C or higher (*2)
2	Cooling → Heating	20 – 2 – 1.0 = 17°C or lower

*2: During heating operation when the body sensor is used, a temperature shift is applied to the intake temperature detected by the sensor, in consideration of the difference in temperature at the top and bottom of the room. (Refer to the "Room Temperature Control" item.) If this intake shift temperature is 4°C, then the heating → cooling change occurs when the temperature detected by the body sensor is 26.5°C or higher.

(4) Cooling (heating) operation does not change if the room temperature changes from area C → A (or A → C) within 10 minutes after the compressor turns OFF. (Monitoring mode is excepted.)

(5) When the heating/cooling change occurs, the 4-way valve switches approximately 30 to 50 seconds after the compressor turns ON.

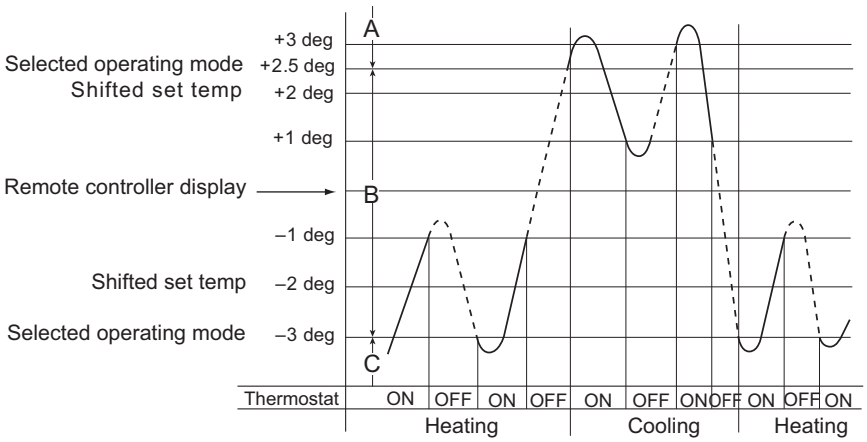

2. Wireless Remote Controller

1. Optional Controller (Remote Controller)

Wireless Remote Controller CZ-RWSU2 / CZ-RWST2 / CZ-RWSL2 / CZ-RWSC2 / CZ-RWSY2 / CZ-RWSK2

One remote control can control a group of up to eight indoor units.

1-1. Names and Functions

REMOTE CONTROL

1. Operation Display	Displays the operation status. (The figure shows all the statuses.) ● The auto-flap display may be different, depending on the installed unit.
2. Start/Stop button	Pressing this button once starts and pressing again stops the operation.
3. Fan speed button	
4. Swing/Wind Direction button	
5. Timer setting button	Use for operating with a timer.
6. Reset button	Use this button after changing the batteries.
7. Cover	Press at the top center and then slide down.
8. Transmitter	
9. Remote control sensor	Detects the temperature at the remote controller when detection has been switched to the remote control by the sensor button.
10. Temperature setting buttons	raises the temperature setting 1 ℃ at a time. lowers the temperature setting 1 ℃ at a time.
11. Filter button	**CZ-RWSC2** Press to turn off the filter lamp on the receiver.
12. Mode Select button	Press to switch the operation mode.
13. Ventilation button	Use this when connected to an aftermarket fan. Pressing this button starts and stops the fan. When the air conditioner is started or stopped, the fan starts or stops at the same time. (appears on the display of the remote control when the fan is operating.)
14. Address button	
15. Sensor button	Use this when switching to detect the temperature at the remote control. At shipping the default setting is set to detect the temperature at the unit. At this time is shown on the display.
16. Clock button	Use this when setting the clock.

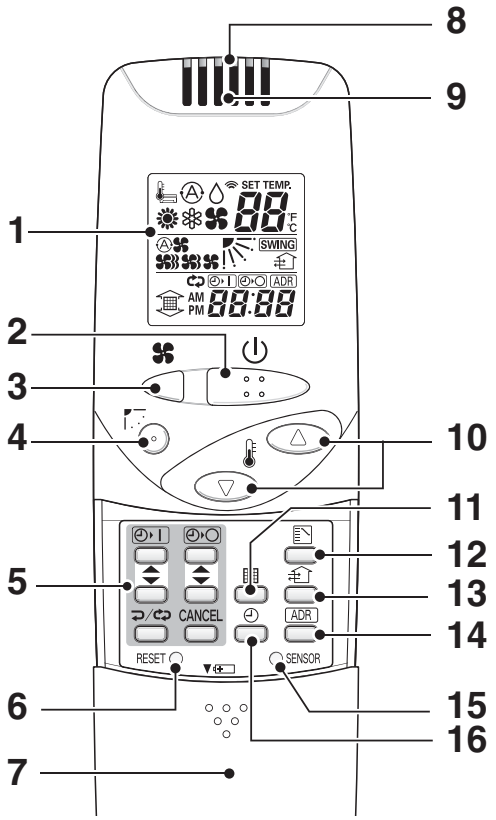

From this page on the names of remote control buttons will be abbreviated as the illustration of the “button”.
E.g.: Start/Stop button →

2. Wireless Remote Controller

RECEIVER

1. Receiver	Receives the signal sent from the remote control.
2. Emergency operation button	**Display lamps** When an error occurs, one of the lamps flashes. When a display lamp is blinking, refer to " 1-14.Before Requesting Service ".
3. Operating lamp	This lamp is lit when the unit is operating.
4. Timer lamp	This lamp is lit when the timer is set.
5. Standby lamp	• When the heater is working, the lamp lights at the following times. When the thermostat has operated during defrosting at the time of the startup. • The lamp flashes when an error occurs.
6. Filter lamp	This lamp is for notifying you when the filter needs to be cleaned.
7. Swing button	
8. Normal/Stop All switch	Use in the **Normal** position. It does not operate in the **Stop All** position. **Remote control, main / remote control, secondary, switch** In normal use this should be on remote control, main. It is also possible to use both in conjunction with a wired remote control (sold separately). (Consult with the dealer where the product was purchased about making the settings.) **Test/On switch** This is used during service. It is not for normal use. **Test Run/On switch** This is used during service. It is not for normal use.
9. Address switch	Differentiate between incoming and outgoing signals.

CZ-RWSU2

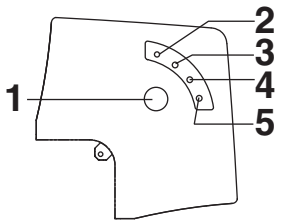

CZ-RWSY2

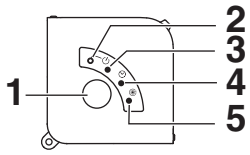

CZ-RWST2

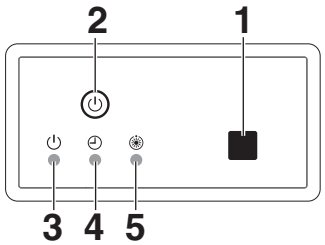

CZ-RWSC2

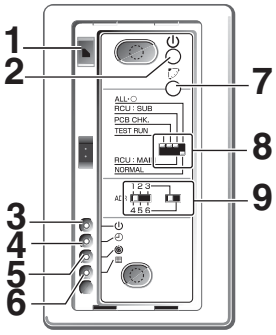

CZ-RWSL2

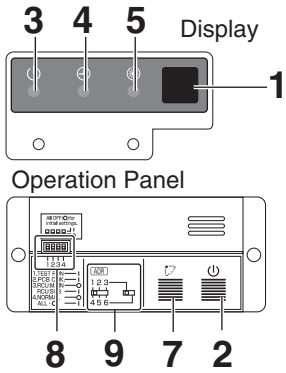

Indoor Unit (CZ-RWSK2)

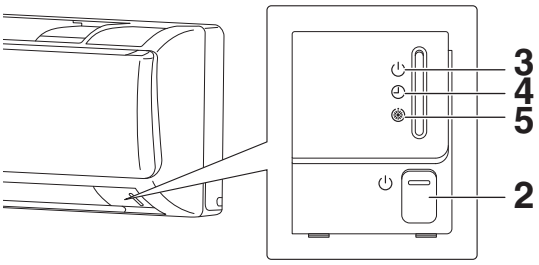

NOTE

- If a heat pump model is being used, it will beep twice and the operating lamp will light up on the display; if the timer and standby lamps blink alternately, a conflict between the heating and cooling exists, so the unit cannot operate in the desired mode. (On models that do not have an Auto function, even if Auto is selected, it works in the same way.)
- When the local operation is disabled by such as the centralized control, and if the Start, Stop, Mode or Temperature setting buttons are pressed, the unit will beep five times and the change will not be made.

2. Wireless Remote Controller

1-2. Installing Batteries

1. Remove the cover.

2. Insert two AAA alkaline batteries.

Put the batteries in with the polarity [+/–] as shown in the figure.

3. Gently insert one end of an unfolded paper clip (or a similar object that can fit) into the Reset hole and press the Reset button inside the hole and then put the cover back on.

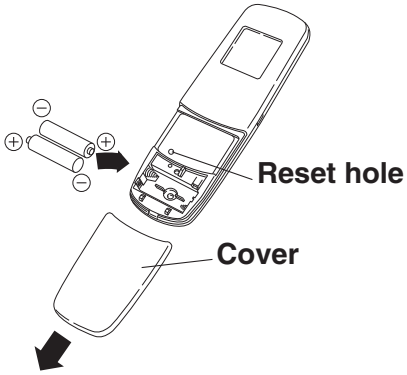

NOTE

- Change the batteries when the display of the remote control gets weak or if it will not work unless close to the receiver.
  (Alkaline batteries generally last about one year.)
- When changing batteries, always use two fresh batteries of the same make.
- If the remote control will not be used for a long period of time, remove the batteries.
- Please dispose of batteries appropriately.
- After changing the batteries, follow the procedures described below to reset the current time.

1-3. How to remove batteries

1. Remove the cover.

2. Press the battery toward the negative end and lift it out by its positive end. (As shown at right)

3. Remove the other battery in the same way.

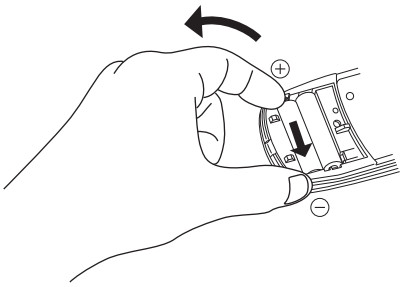

NOTE

- Dispose of the used batteries at the designated location in compliance with the applicable local ordinances.

⚠ Warning

- Do not swallow the battery.
- After removing the battery from remote control unit, keep it away from the reach of children. The battery can cause death by suffocation if swallowed.
- When inserting the battery, make sure the polarities (+ and -) are correct.

1-4. Setting the Current Time

After changing the batteries and pressing reset, be sure to reset the current time.

(When reset is pressed, the current time reverts to [0:00])

1. **Press ◴ for two seconds or more.**
   Once the clock displays starts blinking, the clock can be set.
2. **Set the hour with ▲/▼ of the ◴I.**
   If you press and hold the button, the time changes quickly.
3. **Set the minutes with ▲/▼ of the ◴O.**
   If you press and hold the button, the time changes quickly.
4. **Pressing ◴ completes the time setting.**

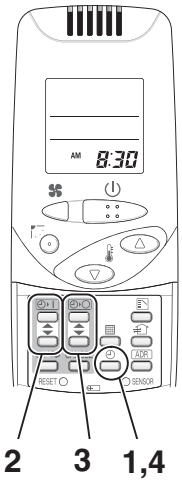

- While you are setting the current time, the time display flashes but the colon does not.
- If the buttons are not pressed for three minutes while setting the current time, it is set to the displayed time.

NOTE

When reset is pressed, the timer settings are deleted.

2. Wireless Remote Controller

1-5. Operation

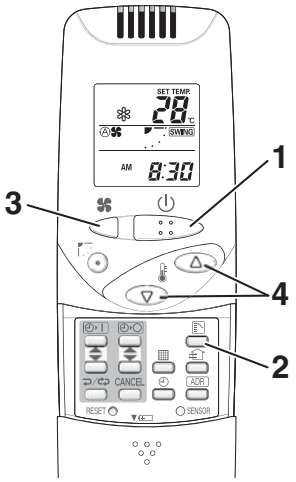

Auto Ⓐ, Heat ☀, Dry ♢, Cool ❄, Fan ✣

Models that only provide the cooling function cannot operate in the auto or heating modes.

Power: Turn on the power of the indoor unit at least 14 hours before operation.

1. **Press ⏻.**
2. **Press ▤ and select from among Auto Ⓐ, Heat ☀, Dry ♢, Cool ❄ and Fan ✣.**
3. **Press ✣ and select the desired speed.**
   If set to Auto Ⓐ✣, the fan speed switches automatically.
   (Auto does not work when in the Fan mode.)
4. **Press one of the ▽ △ buttons and set the desired temperature.**
   Temperature settings cannot be made when in the Fan mode.

	MAX	MIN
Auto Ⓐ	27	17
Heat ☀	26	16
Dry ♢ / Cool ❄	30	18

Stop: Press ⏻.

When the unit is stopped with the remote control, even though the compressor of the outdoor unit stops, the fan on the outdoor unit may continue to run for a while.

If the unit is not heating very effectively with a Low fan speed ✣, switch the fan speed to High ✣ or ✣ Medium.

Depending on the indoor unit being used, it may indicate a function that it does not have. (The fan speed is set.)

If you cannot turn the air conditioner off in the normal way.

Disconnect the power to the indoor unit and contact the dealer where the product was purchased.

<Auto Operation>

If all the indoor units are identical in a cooling system and are under control as one group, it heats or cools automatically via the differences between the set temperature and the room temperature.

<Dry Operation>

- Depending on the indoor unit used, the remote control may have a [Dry] ♢ indicator on its display even though the unit does not have the Dry function. (Same as cooler operation)
- When the room temperature approaches the temperature setting, the unit continues to start up or stop automatically.
- When the drying mode stops operating, the indoor unit's fan blows a gentle breeze in order to keep the moisture from returning to the room at a minimum.
- Depending on the indoor unit used, and/or the temperature in the room, the fan speed may not be adjustable.
- Depending on the unit used, when the outside air temperature is 15 °C or less, the dry function will not operate.

2. Wireless Remote Controller

1-6. Timer Operation

- When setting the timer, make sure the current time on the remote control is accurate.
- The timer's clock can only be set when the display of the remote control is ON.
- After setting the timer, put the remote control in a place where its signal will reach the receiver of the indoor unit. (When the time set for the timer is reached, a signal is sent from the remote control to Start/Stop the unit.)

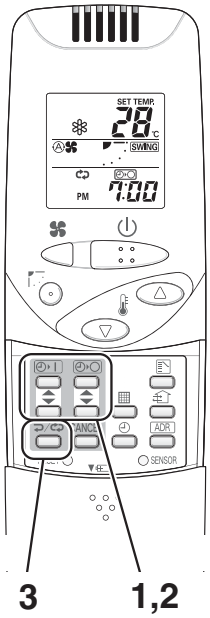

Using the Timer

1. Press either ▲ / ▼ of the ⏲I or ⏲O, and while the time is being displayed, if you press ▲ / ▼ again, a scheduled time can be set.
The time last set on the timer is displayed.
"--:--" indicates time to change the batteries.

2. Press either ▲ / ▼ of the ⏲I or ⏲O and set the timer to the desired time.
Every time you press ▲/▼, the time changes in 10 minute increments.
If you press and hold the button, the time changes quickly.

3. After setting the timer, if you press ⊃/⊂⊃, the time you set changes to a steady display, indicating settings are complete.
After the timer setting is displayed for three seconds, the display reverts to the current time.

Combining ON and OFF Timers

- Setting the ON and OFF timers, respectively.

3

Checking the timer setting

- If you press either ▲/▼ for the ⏲I or the ⏲O, the scheduled time is displayed for four seconds.
- When no timer setting has been made, it displays --:--. (Initial Setting)

Changing a timer setting

- Press ▲/▼ for the ⏲I or the ⏲O, and then when the timer setting is displayed, press ▲ / ▼ for the timer again.

Canceling a timer setting

- If you press [CANCEL], the timer setting is canceled.
- If you wish to cancel the setting for either the ⏲I or the ⏲O timer, press ▲ / ▼ or the desired timer and when the scheduled time is displayed, press [CANCEL].

Using the same timer setting every day

- If you press ⊃/⊂⊃ for 2 or more seconds, " ⊂⊃ " is displayed and the **ON timer** or the **OFF timer** will operate the unit at the same time every day.
- If you press ⊃/⊂⊃ again for two seconds or more, " ⊂⊃ " goes off and the timer operates just once.

2. Wireless Remote Controller

1-7. Adjusting the Wind Direction

- Never try to manually move the flap (up-down wind direction plate) that is operated by the remote control.
- When the unit stops, the flap (up-down wind direction plate) automatically faces downwards.
- When the unit is in heating standby, the flap (up-down wind direction plate) faces upward.
  Also, bear in mind that the flap starts swinging after the heating standby mode is released, but the display on the remote control indicates Auto Flap during standby heating as well.

CZ-RWSU2 / CZ-RWST2 / CZ-RWSL2 / CZ-RWSY2 / Indoor Unit (CZ-RWSK2)

Setting the Wind Direction

While the unit is operating, every time you press , the direction the flap faces changes.

Setting Flap to Swing

If you press to set the flap (up-down wind direction plate) in its most downward facing position, and then press again, SWING is displayed and the flap swings automatically up and down.

Stopping Flap Swing

If you press again while the flap is swinging, you can stop the flap from swinging and set it in place as desired. Thereafter, if you press , you can set the wind direction starting from the most upward position.

- When the unit is in the Cool or Dry modes, the flap cannot stop facing downwards. If you try to stop the flap from swinging while it is facing downwards, it will continue moving until it is in the third position from the top.

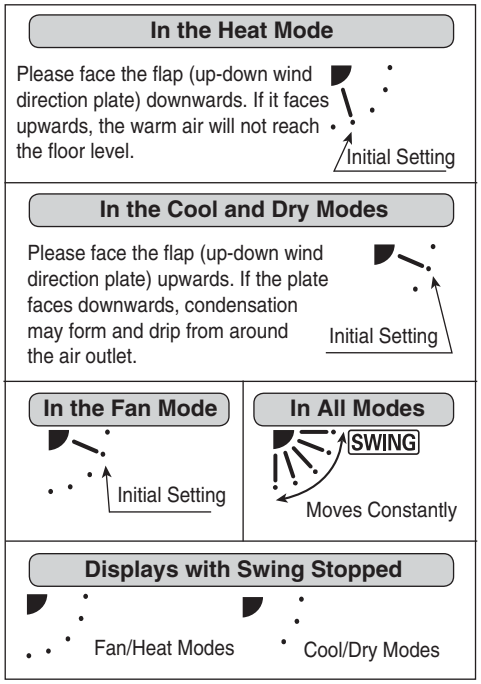

CZ-RWSC2

The available functions differ depending on the indoor unit being used.
The wind direction cannot be set via remote control for any models other than those noted below.
For more information, please refer to the users' manual that came with your indoor unit.
Four-direction Ceiling Cassette Models, Bi-directional Ceiling Cassette Models, Unidirectional Cassette Models for High Ceilings, Ceiling Suspended Models, Wall Models
Please refer to *Setting the Wind Direction and Stopping Flap Swing.*

1-8. Operating Multiple In/Outdoor Units Simultaneously (Group Control)

Group control works well for providing air conditioning to one, large room with more than one air conditioning units.

- One remote control can operate up to eight indoor units.
- All the indoor units have identical settings.
- Set temperature sensing to the indoor unit (Main Sensor).

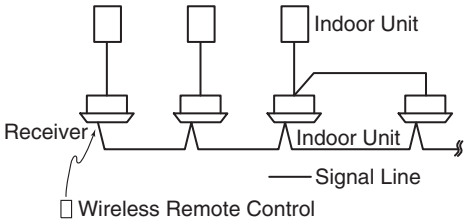

2. Wireless Remote Controller

1-9. Using the Remote Control

- Point the transmitter of the remote control at the receiver. When the signal is received correctly it will beep once. (It beeps twice only when the unit starts operating.)
- The signal can be received at a distance of about 6 meters. This distance should be used only as a guide. It depends on battery strength.
- Make sure nothing is between the remote control and the receiver that could block the signal.
- Do not leave the remote in direct sunlight, where the wind from the air conditioner can blow directly on it, or near any other heat source.
- Take care not to drop, throw or wash the remote control with water.
- The signal from the remote control may not be received in rooms with rapid start fluorescent lighting, inverter lights, plasma displays, LCD televisions (monitor), etc. For more information, please contact the dealer where the product was purchased.

Wall Mount Use

- Press ⏻ from the location you wish to mount the remote and make sure the signal is received correctly.
- Pull the remote control forward to remove it.

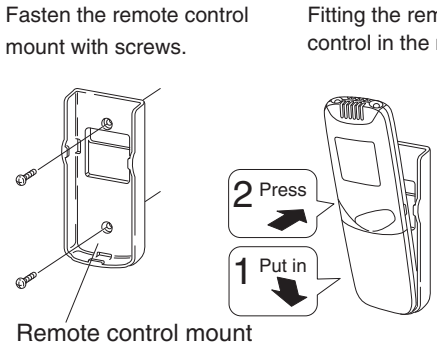

1-10. For Best Results

Don't get the remote control too far away from the receiver.
This may cause a malfunction. Be sure to keep the remote control in the same room as the receiver.

Point the remote control at the receiver.
When the signal is received correctly it will beep one time.

Avoid locating the remote control where it is covered, such as behind a curtain.
Keep it out in the open.

1-11. Addresses

In both multi and single unit installations, when more than one indoor unit is installed in the same room with a compatible remote control, addresses can be set up to avoid crosstalk. By setting the address switches on the receivers and matching them with the number of addresses on the remote control, up to six indoor units can be controlled separately with the remote control. (When using units in a flexible combination or operating multiple units simultaneously, as they are operated at the same time, they cannot be controlled individually.) There are separate address settings, receiver addresses for the receivers*1 and transmitter addresses for the remote control.
For more information, please contact the dealer where the product was purchased.

- The setting procedure is different for CZ-RWSY2 and Indoor Unit (CZ-RWSK2). (See Setting Addresses (CZ-RWSY2 / CZ-RWSK2) in the next page.)
- These settings are saved in nonvolatile memory in the remote control, so even when its batteries are changed, the settings do not have to be made again.

*1 CZ-RWST2 is of receivers (Inside the indoor unit); CZ-RWSL2 is of an operation panel. (Inside the indoor unit)

Checking Addresses
When you press ADR on the remote control, its current address is shown in the display. If this address corresponds to the address of a receiver*2, the buzzer sounds. (If it is on ALL, the buzzer will always sound.)
If it is on ALL, it can be operated regardless of receiver addresses. Point the remote control at the receiver you wish to operate and transmit.
*2 CZ-RWSL2 is a receiver. (Indoor unit)

2. Wireless Remote Controller

Matching up Addresses

Setting Remote Control Addresses

1. If you press [ADR] and ⇄/⇄ at the same time, "SET" will blink.

2. While holding [ADR] down, every time you press ⇄/⇄, it cycles from ALL → 1 → 2 → 3… 6 → ALL.

Set it to the receiver address switch of the indoor unit you wish to operate.

3. When you release [ADR], the address that was displayed is set.

When you do this, if it corresponds to the receiver's address setting, the buzzer sounds.

Address Display on the Remote Control	ALL	1	2	●●●●●	6
CZ-RWSU2					
Position of receiver's (inside indoor unit) address switch	The position of the receiver's address switch does not matter.	4-6 1-3 S001; 3 6 2 1 54 S002	4-6 1-3 S001; 3 6 2 1 54 S002	●●●●●	For 1, 2 and 3, set the switch on the right and for 4, 5 and 6, to the left. 4-6 1-3 S001; 3 6 2 1 54 S002
CZ-RWST2					
Position of receiver's (inside indoor unit) address switch	The position of the receiver's address switch does not matter.	1 2 3 4 5 6 S001 S002	1 2 3 4 5 6 S001 S002	●●●●●	For 1, 2 and 3, set the switch on the left and for 4, 5 and 6, to the right. 1 2 3 4 5 6 S001 S002
CZ-RWSL2					
Position of the operation panel's (inside indoor unit) address switch	The position of the receiver's address switch does not matter.	ADR 1 2 3 4 5 6	ADR 1 2 3 4 5 6	●●●●●	For 1, 2 and 3, set the switch on the left and for 4, 5 and 6, to the right. ADR 1 2 3 4 5 6
CZ-RWSC2					
Position of the Receiver's Address Switch	The position of the receiver's address switch does not matter.	1 2 3 ADR 4 5 6	1 2 3 ADR 4 5 6	●●●●●	For 1, 2 and 3, set the switch on the left and for 4, 5 and 6, to the right. 1 2 3 ADR 4 5 6

Setting Addresses (CZ-RWSY2 / CZ-RWSK2)

(Setting the address of the indoor unit)

1. First of all, set the address for the remote control with Setting Remote Control Address (See Page 3-12).

2. Press [Emergency Operation] ⏻ of the indoor unit for four seconds or more.

When you do this, the lamps of the display will blink one after another.

3. Press [ADR] on the remote control.

4. The buzzer will sound and the address of the indoor unit will change to the address displayed on the remote control.

5. If you press [Emergency Operation] ⏻ of the indoor unit once, the lamps on the indoor unit's display will turn off.

NOTE

- Please do not hold the [Emergency Operation] ⏻ button of the indoor unit down while the indoor unit's display lamps are blinking one after another.
- Make sure to operate while the indoor unit is stopped.
- The address of indoor unit is set to "ALL" at the time of the shipment.

2. Wireless Remote Controller

1-12. Emergency Operation

Use [Emergency Operation] ⏻ in the following situations when there is an urgent need.

- When the remote control's batteries have failed.
- When the remote control is broken.
- When the remote control is lost.

*1 Figures: CZ-RWSU2, CZ-RWSY2 and CZ-RWST2 are of receivers (inside indoor unit), CZ-RWSL2 is of the operation panel (inside indoor unit) and Indoor Unit (CZ-RWSK2) is of its front panel.

CZ-RWSU2 / CZ-RWST2 / CZ-RWSY2 / Indoor Unit (CZ-RWSK2)

Start : press [Emergency Operation] ⏻ of the receiver.

If the indoor temperature is 24 °C or greater when the unit starts running, it will act as a cooler.

If the indoor temperature is less than 24 °C when the unit starts running, it will act as a heater.

Stop : press [Emergency Operation] ⏻ of the receiver again.

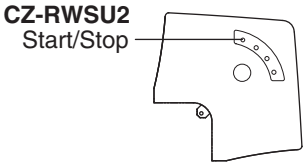

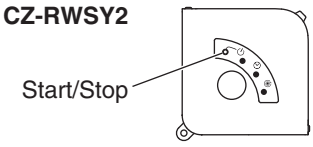

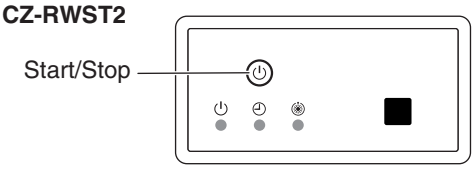

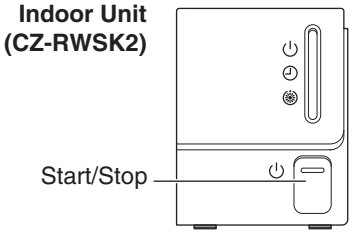

NOTE

- The Test Run/On and Test/On switches are for use when the unit is installed and test run. It is not for normal use.
- If the [Normal/Stop ALL] switch is on **Stop ALL,** the unit cannot receive signals from the remote control.

CZ-RWSC2 / CZ-RWSL2

1. Press [Emergency Operation] ⏻ of the receiver.

If the indoor temperature is 24 °C or greater when the unit starts running, it will act as a cooler.

If the indoor temperature is less than 24 °C when the unit starts running, it will act as a heater.

2. If you press , the wind direction automatically oscillates up and down.

Stop : press [Emergency Operation] ⏻ of the receiver again.

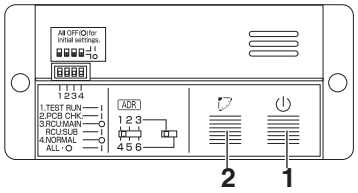

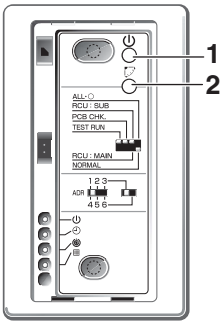

NOTE

- The Test Run/On and Test/On switches are for use when the unit is installed and test run. It is not for normal use.
- If the [Normal/Stop ALL] switch is on **Stop ALL**, the unit cannot receive signals from the remote control.

2. Wireless Remote Controller

1-13. Miscellaneous Settings

A variety of changes can be made to settings, depending on the indoor unit being used.

Operation mode indicator, time display (24 hour, AM/PM), Heat Max Temp

- (These settings are saved in nonvolatile memory in the remote control, so even when its batteries are changed, the settings do not have to be made again.)
- First check the display of the remote control when the unit is stopped and then make any desired settings.

How to Operate

- While holding down the buttons below, every time ⊃/⊂⊃ is pressed the remote control's display changes.
- Whatever is being displayed when you release ⊃/⊂⊃ is set.

Setting Item	Operation Button	Setting Content	Remote Control Display
Remote control operation mode display setting when is pressed	Press ⊃/⊂⊃ while pressing	Heat Pump (with Auto)	
		Heat Pump (without Auto)	
		Dedicated air conditioner	
Clock display setting	Press ⊃/⊂⊃ while pressing	24 Hour	23:59
		AM/PM	PM 11:59
Max possible temperature setting in the Heat mode	Press ⊃/⊂⊃ while pressing	Maximum heating temperature range is 26 °C – 30 °C	26→27→28→29→30

3

2. Wireless Remote Controller

1-14. Before Requesting Service

Before requesting service, please check the followings.

Problem	Cause	Solution
The unit doesn't work even when ⏻ is pressed on the remote control.	The power to the indoor unit is not ON.	Make sure the power to the indoor unit is ON.
	Is the Normal/Stop All switch in the Stop All position? (See Page 3-7)	Switch it to the Normal position and cancel operation.
	Are the remote control's batteries dead?	Change the batteries.
	Is there a mismatch between the display lamp and cooling/heating or is it set to something other than Auto? (The operating lamp stays lit, while the timer lamp and the standby lamp blink alternately.)	Change the operating mode.
	Do the addresses match one another?	Check the addresses of the receiver*1 and the remote control. (See Page 3-12)
The air conditioner starts and stops on its own.	Has the timer been set to repeat?	Check the timer settings.(See Page 3-10)
"EP" is displayed on the remote control when the unit is stopped.	An error has occurred in the non-volatile memory.	Please contact your sales outlet.
Although the unit is for air conditioning only, either Auto or Heat is indicated in the display.		Make settings to the remote control's operation mode display. (See Page 3-15)
After putting the batteries in the remote control, even when it is operated, the display does not change.		Press the Reset button on the remote control. (See Page 3-8)
The timer cannot be set.		Make the settings when the remote control is in Operation Display. (See Page 3-9)

If the problem persists even after you check the foregoing items, stop the unit, disconnect the power to the indoor unit and contact the dealer where the product was purchased with the model number and problem you are having.

As it is dangerous, under no circumstances should you undertake repairs yourself.

Further, when the receiver's*2 lamps are blinking; please contact your retailer with that information.

* 1 CZ-RWSL2 is an operation panel

* 2 CZ-RWSL2 is a display

1-15. Specifications

CZ-RWSU2 / CZ-RWST2 / CZ-RWSC2 / CZ-RWSY2 / CZ-RWSK2

Wireless Remote Control

Dimensions	182 mm (H) X 61 mm (W) X 18.5 mm (D)
Power source	Two AAA alkaline batteries
Clock Accuracy	±30 seconds per month (at 25 °C)

CZ-RWSU2 / CZ-RWST2 / CZ-RWSC2 / CZ-RWSY2

Receiver

Dimensions	CZ-RWSU2	200 mm (H) X 200 mm (W) X 25 mm (D)
	CZ-RWST2	65 mm (H) X 130 mm (W) X 22 mm (D)
	CZ-RWSC2	120 mm (H) X 70 mm (W) X 13 mm (D)
	CZ-RWSY2	108 mm (H) X 108 mm (W) X 20 mm (D)
Power source		16 V DC (Supplied from the terminal strip of the indoor unit's remote control)

CZ-RWSL2

Display	Dimensions	37 mm (H) X 70 mm (W) X 22 mm (D)
	Power source	5 V DC (supplied from the operation panel)
Operation Panel	Dimensions	55 mm (H) X 120 mm (W) X 16 mm (D)
	Power source	16 V DC (Supplied from the terminal strip of the indoor unit's remote control)

2. How to Install the Wireless Remote Controller Receiver

■ **Common to All Models**

2-1. Warnings about Installation of Receivers

The wireless remote uses a very weak infrared light for its signal, which can result in the signal not being received because of the following influences, so take care in where the unit is installed.

- Inverter or rapid-start type fluorescent lights. (Models without glow lamps)
- Plasma display or LCD televisions.
- Direct sunlight or other sources of bright light.

2-2. Warnings about Installing Remote Controls

(1) If a remote control is to be operated from a remote control holder that is hung on a wall, turn on the lights in the room as well as any electrical appliances and then check to make sure the air conditioner works with the remote control in the location where it will be installed. If it works, continue with installation.

(2) If the air conditioner is to be switched from the main sensor to a remote control sensor, pay attention to the following when installing.

- Locate where no warm or cold drafts will affect it.
- Locate in a place free from direct sunlight.
- Locate where it will not be affected by any other heat/cold source.

2-3. Things to remember when wired and wireless remotes are installed at the same time

Two remote controls can be used to control the unit if the wireless remote control kit is installed at the same time as the wired remote control.

(Up to 2 remotes [a wireless remote kit and the wired remote control] can be installed.)

When using 2 remotes, one or more units can be operated by the remotes.

NOTE

1. When wiring remote controls, be sure to double-check the terminal numbers of the indoor unit before connecting them so there are no mistakes in the wiring. (Damage will occur if high voltage [e.g. supply voltage] is applied)
2. It is not possible to use more than one wireless remote control kit with one indoor unit.
   (A receiver located separately can be used at the same time)
3. If both a wireless and a wired remote control are to be installed and used at the same time, one of them must be set up as the sub remote control.

- If the wired remote control is to be the sub remote, change the wired remote control to the sub remote.
- If the wireless remote control is to be the secondary, turn the #3 switch on the wireless receiver (operation panel) from OFF to ON. (see next page)

When 1 indoor unit is operated by 2 remote controls:

※ Either of the remotes can be set to main/sub.

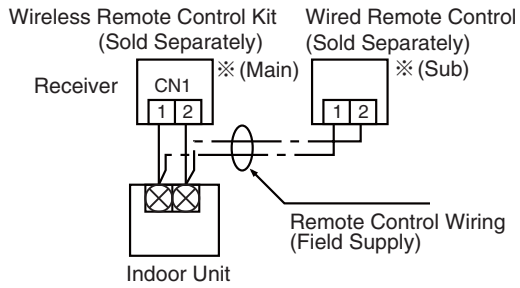

- Use wiring of 0.5 mm^2 to 2 mm^2 for field supply.
- Use a total wire length of no more than 400 m.

If a group of units are to be controlled by 2 remote controls;

※ Main/sub remote controls will work regardless of which indoor unit they are installed to.

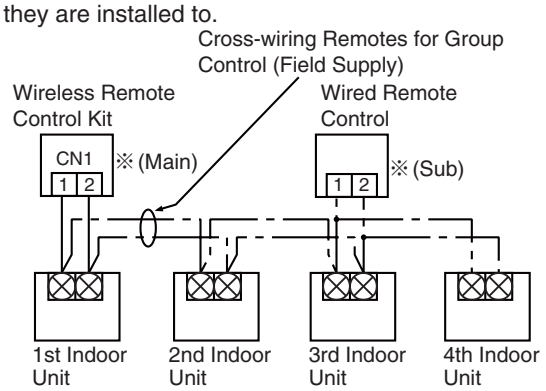

- Use wiring of 0.5 mm^2 to 2 mm^2 for field supply.
- Make the total wire length when cross-wiring a group no more than 200 m.

2. Wireless Remote Controller

CZ-RWSU2

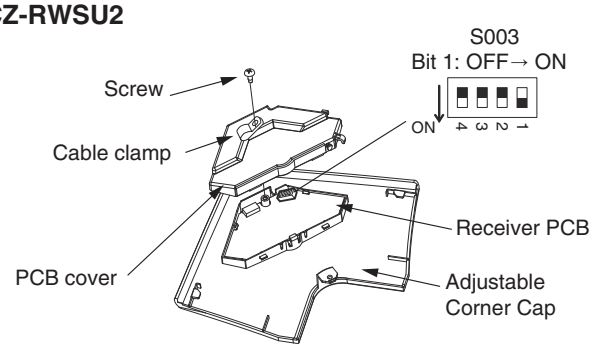

CZ-RWST2

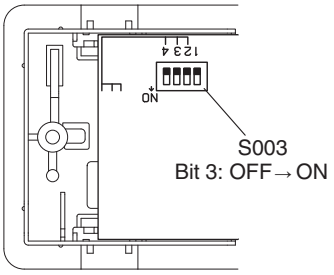

CZ-RWSL2

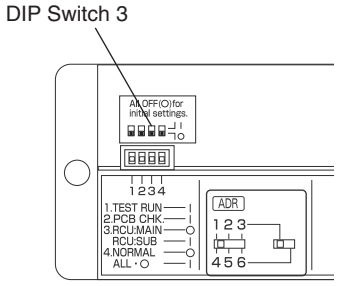

CZ-RWSC2

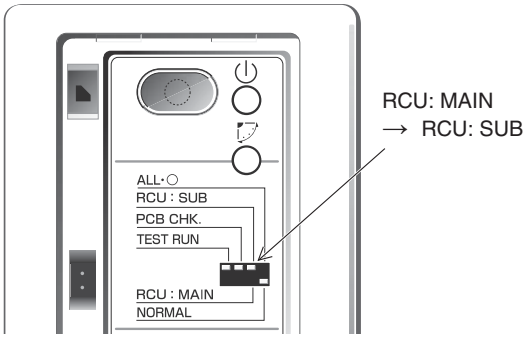

3

2. Wireless Remote Controller

■ CZ-RWSU2

2-4. Accessories

No.	Accessories	Quantity
1	Receiver	1
2	Remote Control	1
3	Remote Control Holder	1

No.	Accessories	Quantity
4	Dry-cell Batteries	2
5	Users Manual	1
6	Truss Self-Tapping Screws 4 X 16	2
7	Cable clamp	1

2-5. Installing the Receiver

The receiver can only be installed on the corner indicated in Fig. 3-1, so consider how the panel will face when it is installed on the indoor unit.

(1) Remove the air inlet grill.

(2) Remove the screw holding the adjustable corner cap, slide the cap to the side and remove it. (Fig. 3-2)

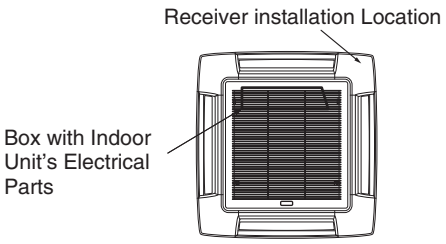

Fig. 3-1

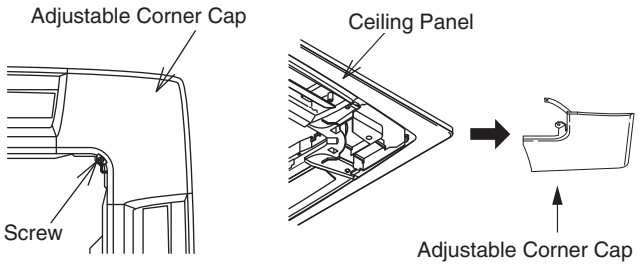

Fig. 3-2

(3) To pass the wire through the panel, bend back the clip on the hexagonal hole (diagonal line) and then pass wire protruding from the wireless receiver through the grill. (Fig. 3-3)

(4) After wiring according to the directions in Wiring the Receiver Unit below, leave enough wiring so the receiver's adjustable corner cap can be removed and fasten the cable clamp with its screw. (Fig. 3-3)

(5) Hang the string on the corner cover onto the pin on the ceiling panel as shown in the diagram. Then slide the corner cover onto the ceiling panel until the three clips are correctly located, and then fix it in place with the screws. (Fig. 3-4)

- Make sure the wire is not caught.
- Refer to the installation instructions supplied with the panel.

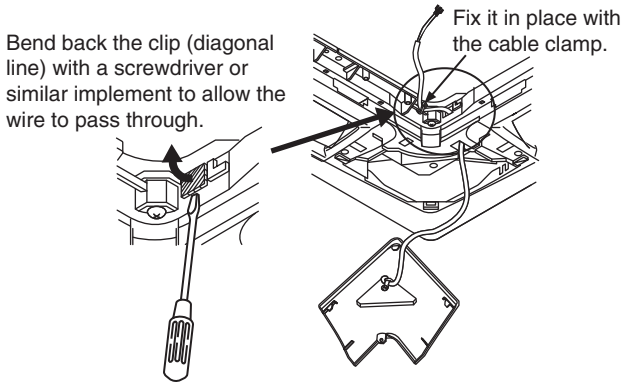

Fig. 3-3

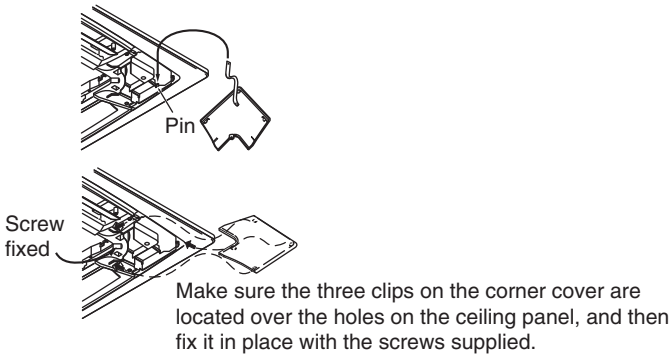

Fig. 3-4

NOTE

(1) If the wiring for the receiver is bundled with other wires, such as the incoming line, it may cause a malfunction, so avoid putting them together.

(2) If something causes the unit's power source to make noise it will be necessary to resolve the problem, such as by installing a noise filter.

- For more information about wiring or test operation, refer to Wiring the Receiver and Test Run.

2. Wireless Remote Controller

2-6. Wiring the Receiver

- **Wiring Diagram**

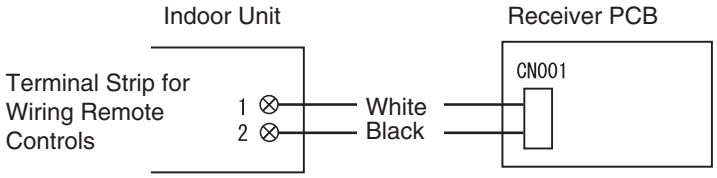

- **Connections**

Connect the wires from the receiver to the remote control terminal strip on the indoor unit. (Polarity does not matter)

2-7. Test Operation

Implementing a Test Run

1. Turn the #1 DIP switch [S003] on the receiver's PCB from OFF to ON and operate the wireless remote control with its Start/Stop button.
2. During a test run, all display lamps on the display will light up.
3. During a test run, it is not possible to adjust the temperature.
4. After completing a test run, be absolutely sure to turn the #1 DIP switch from ON to OFF and make sure none of the display lamps are blinking. Also, replace the PCB cover back as it was and fasten it; while holding the wiring with the cable clamp, tighten its screw.

NOTE

(1) This is hard on the device, so only use this for the test run.

(2) After turning on the power, the unit will not receive any commands from the remote control for about 1 minute. This is not an error. (In fact it does receive signals, but they are cancelled.)

CZ-RWSU2

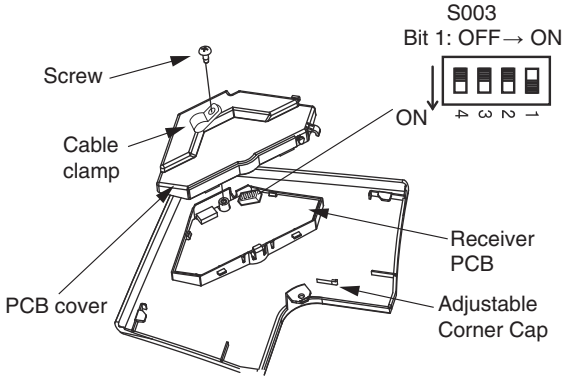

Fig. 3-5

2-8. Setting Address Switches

- When more than one receiver and remote control are installed in the same room, setting up addresses allows them to avoid interfering with each other.
- Refer to the Users Manual for information on how to change the addresses of the remote controls.
- Changing the address of a receiver can be done after removing the screw to the receiver's PCB cover. Once the change is complete, put the cover back in place; while holding the wiring with the cable clamp, tighten its screw.

Address Display on the Remote Control	ALL	1	2	·····	6
Position of the Receiver's Address Switch	It doesn't matter where the receiver's address switch is.	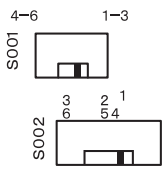	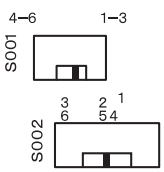	·····	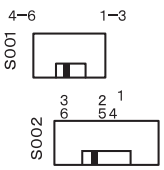

2. Wireless Remote Controller

■ CZ-RWST2

2-9. Accessories

No.	Accessories	Quantity
1	Receiver	1
2	Remote Control	1
3	Remote Control Holder	1

No.	Accessories	Quantity
4	Dry-cell Batteries	2
5	Users Manual	1
6	Truss Self-Tapping Screws 4 X 16	2
7	Cable tie	1

2-10. Installing the Receiver

● Ceiling Suspended Model

(1) Open the air inlet grill on the side panel, remove the 1 screw and then move it toward the front (direction of the arrow) and remove it. (Fig. 3-6)

(2) Wrap the tip of a slotted screwdriver with plastic tape and then slip it in to the side of and under where O is printed on the cover, wiggling the cover free. (Fig. 3-7) (Be careful not to scratch the panel.)

(3) After passing the lead wire through the panel, install the receiver in the hole in the panel. (The projecting parts of the receiver is held in the hole in the panel)

(4) Fasten the receiver's lead wire to the cable clip that is holding the wire from the louver motor. (Fig. 3-8)

(5) Attach the side panel.

(6) Put the receiver's lead wire together with other wires, such as the louver motor wire and fasten them with the wire saddle. (Fig. 3-9)

• Use the hole in the upper part of the wiring box to lead it in.

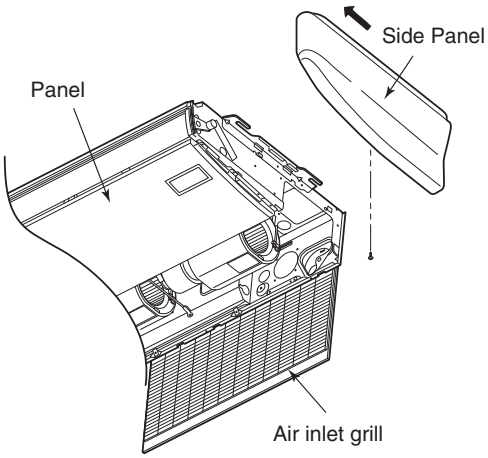

Fig. 3-6

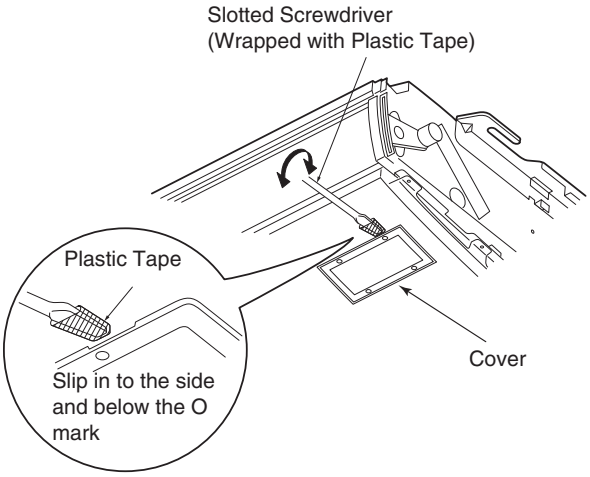

Fig. 3-7

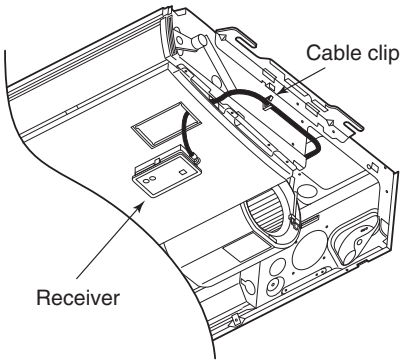

Fig. 3-8

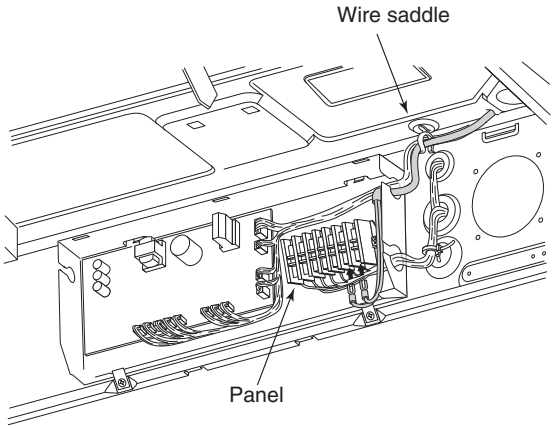

Fig. 3-9

2. Wireless Remote Controller

● **Unidirectional cassette model for high ceilings/Unidirectional ceiling cassette model**

(1) While spreading the tabs of the cover, pull it out from the panel to the front. (Fig. 3-10)

(2) Pass the lead wire through the panel and install the receiver in the hole in the panel.
(The projecting parts of the receiver hold it in the hole in the panel)

(3) Press the lead wire from the receiver in along the rib on the back of the panel.
If installing to a unidirectional high ceiling cassette, pass it through the cutout. (Fig. 3-11)

(4) Install the panel on the indoor unit.

(5) Fasten the lead wire sticking out from the panel with the cable clips on the inside of the indoor unit. (Fig. 3-12)

(6) Draw the lead wire into the electrical box through the hole on the bottom and connect it to the remote control terminal strip.
If installing to a high ceiling unidirectional cassette, fasten the wire at the latch of the fan casing with the enclosed cable tie. (Fig. 3-13)

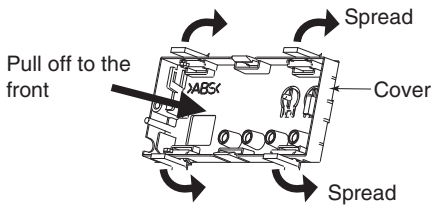

Fig. 3-10

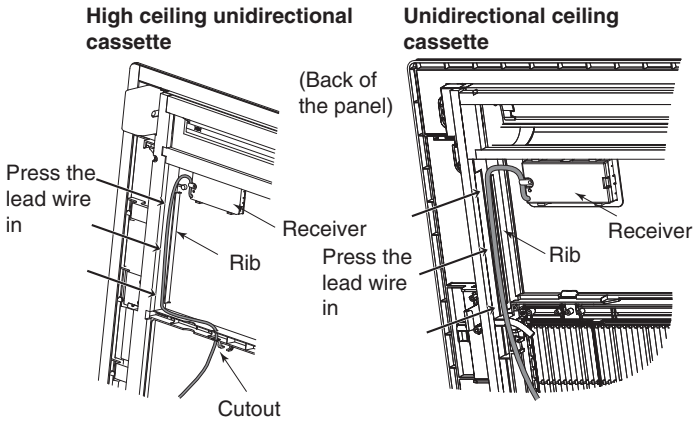

Fig. 3-11

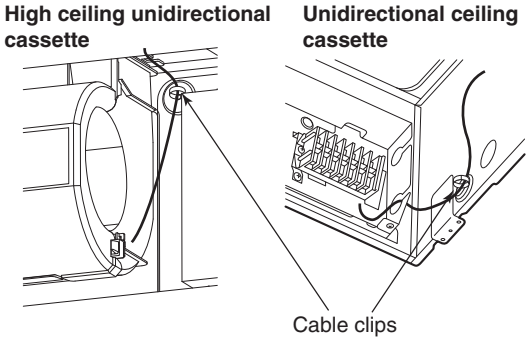

Fig. 3-12

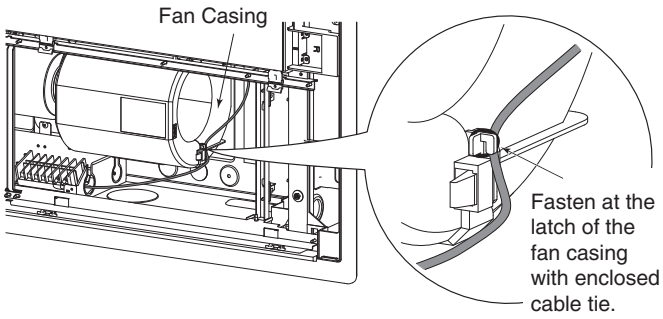

Fig. 3-13

NOTE

(1) If the wiring for the receiver is bundled with other wires, such as the incoming line, it may cause a malfunction, so avoid putting them together.

(2) Fasten the lead wire securely so it does not get wrapped up in the fan.

(3) If something causes the unit's power source to make noise it will be necessary to resolve the problem, such as by installing a noise filter.

• For more information about wiring or test operation, refer to Wiring the Receiver and Test Run.

2-11. Wiring the Receiver

Wiring Diagram

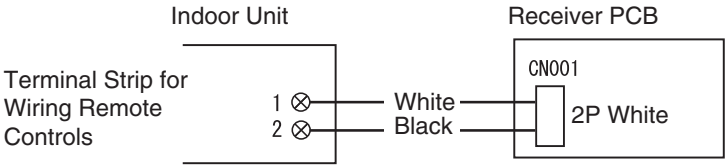

Connections

Connect the wires from the receiver to the remote control terminal strip on the indoor unit. (Polarity does not matter)

2. Wireless Remote Controller

2-12. Test Operation

Implementing a Test Run

1. Turn the #1 DIP switch [S003] on the receiver's PCB from OFF to ON and operate the wireless remote control with its Start/Stop button.
2. During a test run, all display lamps on the display will light up.
3. During a test run, it is not possible to adjust the temperature.
4. After completing a test run, be absolutely sure to turn the #1 DIP switch from ON to OFF and make sure none of the display lamps are blinking. Also, replace the PCB cover back as it was and fasten it; while holding the wiring with the cable clamp, tighten its screw.

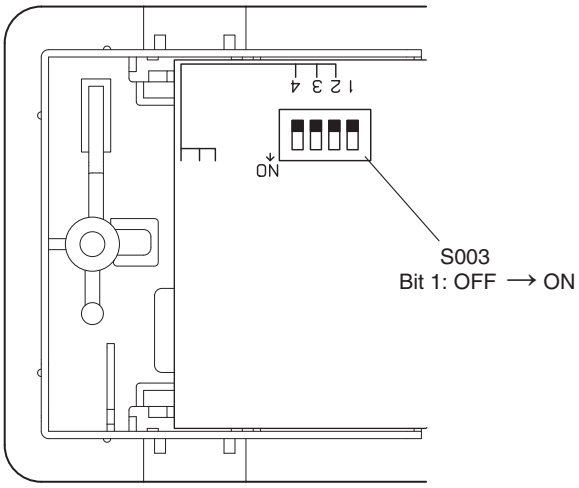

Fig. 3-14

NOTE

(1) This is hard on the device, so only use this for the test run.

(2) After turning on the power, the unit will not receive any commands from the remote control for about 1 minute. This is not an error. (In fact it does receive signals, but they are cancelled.)

2-13. Setting Address Switches

- When more than one receiver and remote control are installed in the same room, setting up addresses allows them to avoid interfering with each other.
- Refer to the Users Manual for information on how to change the addresses of the remote controls.
- Changing the address of a receiver can be done after removing the screw to the receiver's PCB cover. Once the change is complete, put the cover back in place; while holding the wiring with the cable clamp, tighten its screw.

Address Display on the Remote Control	AL L	1	2	·····	6
Position of the Receiver's Address Switch	It doesn't matter where the receiver's address switch is.	1 2 3 / 4 5 6 S001 S002	1 2 3 / 4 5 6 S001 S002	·····	1 2 3 / 4 5 6 S001 S002

2. Wireless Remote Controller

■ **CZ-RWSL2**

2-14. Accessories

No.	Accessories	Quantity
1	Operation Panel	1
2	Display	1
3	Remote Control	1
4	Remote Control Holder	1

No.	Accessories	Quantity
4	Dry-cell Batteries	2
5	Users Manual	1
6	Truss Self-Tapping Screws 4 X 16	2
7	Pan Head Self-Tapping Screws 4 X 10	2
8	Plastic Clamp L150	4

2-15. Installing the Display/Operation Panel

Resin Panel

Installing the Operation Panel

(1) Remove the 2 screws and remove cover A from the back of the panel. (Fig. 3-15)

(2) Fasten the operation panel to the location in the diagram below with the 2 enclosed screws (4 X10). (Fig. 3-16)

(3) Pass the wiring for the display (W2, 6P white connector) through the back of the panel.

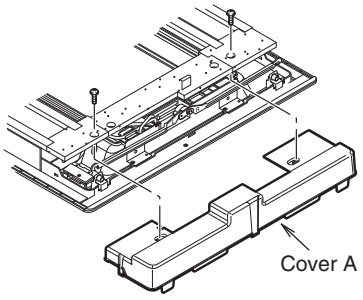

Fig. 3-15

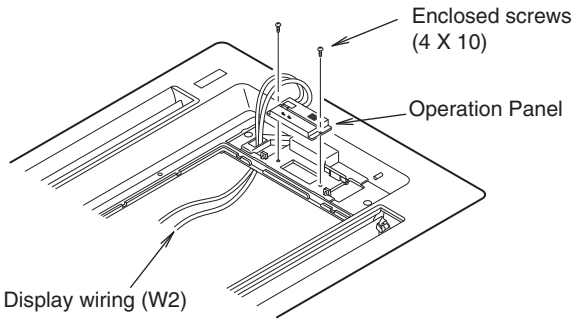

Fig. 3-16

Installing the Display

(1) 1 Cover B is fitted inside cover A, so remove the 1 screw and detach it by pressing on it from the front side of the panel. (Fig. 3-17)

(2) Connect the wiring (W2) for the display that is sticking out from the operation panel and fit the display into the panel. Make sure the 6P white connector is firmly connected all the way in.

(3) Bend the lead wire of the display into shape so it does not come in contact with the louver shaft. There is a groove in the circled part in diagram 3 that is for passing wire through; press the lead wire into this groove so there is no slack in it.

(4) Attach cover A. When doing so, press it securely into the place indicated by the arrow in Fig 3-18.

(5) Shape the lead wire of the operation panel appropriately and fasten it with the enclosed plastic clamp.

(6) Install the ceiling panel.

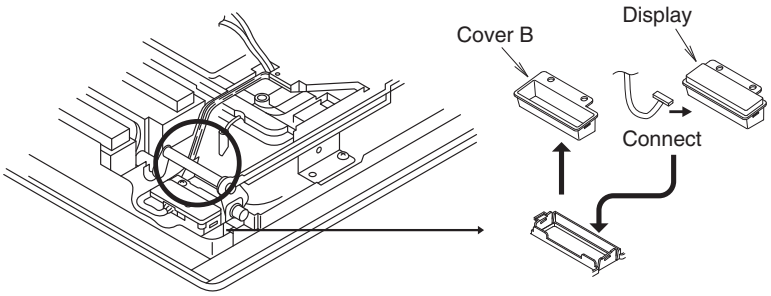

Fig. 3-17

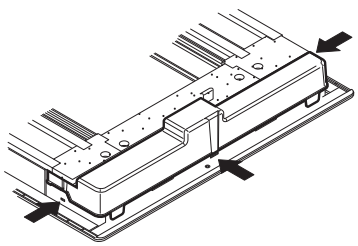

Fig. 3-18

2. Wireless Remote Controller

Metal Panel

Installing the Operation Panel

(1) Remove the 2 screws and remove cover A from the back of the panel. (Fig. 3-19)
(2) Fasten the operation panel to the location in the diagram below with the 2 enclosed screws (4 X10). (Fig. 3-20)
(3) Pass the wiring for the display (W2, 6P white connector) through the back of the panel.

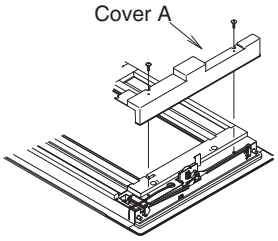

Fig. 3-19

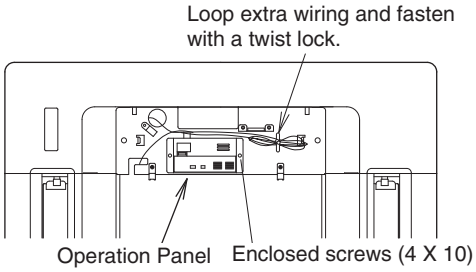

Fig. 3-20

Installing the Display

(1) Cover B is fit into Cover A, so spread the points as indicated in figure 3-21 and remove it.
The tape holding cover B is only to protect it during transport, so remove it and throw it away.
(2) Connect the wiring (W2) for the display that is sticking out from the operation panel and fit the display into the panel.
Make sure the 6P white connector is firmly connected all the way in.
(3) Pass the lead wire for the display through the cutout in the panel, and using the hole in the metal panel, fasten it with the plastic clamp. (Fig. 3-22)
(4) Attach cover A.
(5) Properly route the lead wire of the operation panel and fasten it with the twist lock. (Fig. 3-20)
(6) Install the ceiling panel.

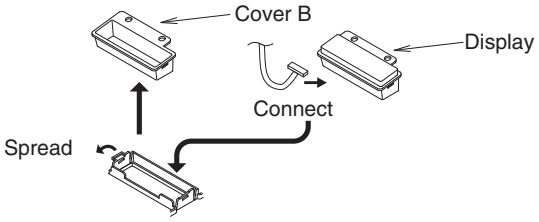

Fig. 3-21

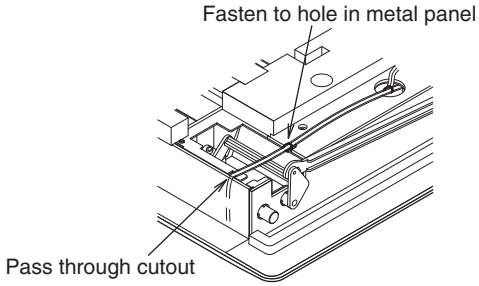

Fig. 3-22

NOTE

(1) If the wiring to the operation panel is bundled together with other wiring, such as the incoming line from the power source, it can cause a malfunction, so avoid doing so.
(2) If something causes the unit's power source to make noise it will be necessary to resolve the problem, such as by installing a noise filter.

- For more information about wiring or test runs, refer to Wiring the Receiver and Test Run.

2-16. Wiring

Wiring Diagram

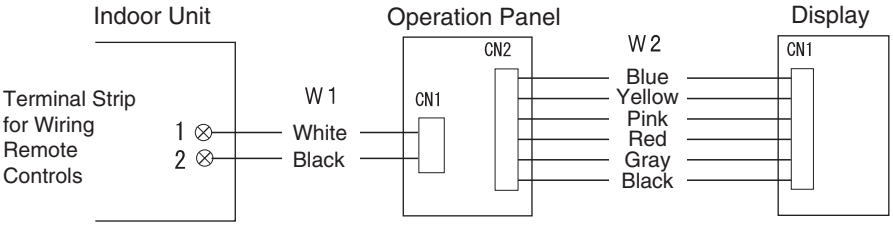

Connections

(1) Connect W1 to the remote control terminal strip on the indoor unit. (Polarity does not matter)
(2) Connect the display and the operation panel with W2.

2. Wireless Remote Controller

2-17. Test Operation

Implementing a Test Run

1. Turn the #1 DIP switch of the operation panel from OFF to ON (Down → Up) and operate the wireless remote control with its Start/Stop button.
2. During a test run, all display lamps on the display will light up.
3. During a test run, it is not possible to adjust the temperature.
4. After completing a test run, be absolutely sure to turn the #1 DIP switch from ON to OFF (Up → Down) and make sure none of the display lamps are blinking. Also, replace the PCB cover back as it was and fasten it; while holding the wiring in the cable clamp, tighten its screw.

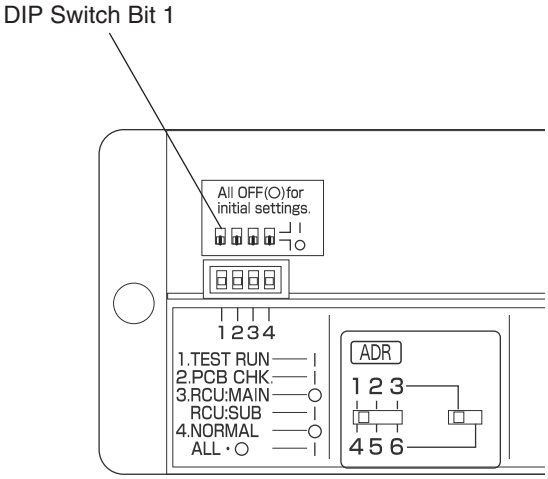

Fig. 3-23

NOTE

(1) This is hard on the device, so only use this for the test run.

(2) After turning on the power, the unit will not receive any commands from the remote control for about 1 minute. This is not an error. (In fact it does receive signals, but they are cancelled)

2-18. Setting Address Switches

- When more than one display/operation panel and remote control are installed in the same room, setting up addresses allows them to avoid interfering with each other.
- Refer to the Users Manual for information on how to change the addresses of the remote controls.

Address Display on the Remote Control	AL L	1	2	·····	6
Position of the Receiver's Address Switch	It doesn't matter where the receiver's address switch is.	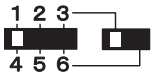	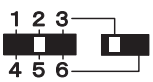	·····	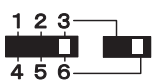

2. Wireless Remote Controller

■ CZ-RWSC2

2-19. Accessories

No.	Accessories	Quantity
1	Receiver (Enclosed 200 mm wiring)	1
2	Remote Control	1
3	Remote Control Holder	1
4	Dry-cell Batteries	2

No.	Accessories	Quantity
4	Users Manual	1
5	Truss Self-Tapping Screws 4 X 16	2
6	Small screw	2
7	Wood screw	2
8	Cable tie	1

2-20. Installing the Receiver

When using a separately installed receiver as a built-in model, install it to the JIS switch box (field supply) shown in the diagram on the right, which has been built into the wall on site in advance.

(1) Remove the face plate of the receiver by slipping a slotted screwdriver or the like into the cutout on the bottom.

(2) Install the receiver with the 2 enclosed small M4 screws.

(3) Connect the receiver's wiring (2 cores) with the wiring from the indoor unit. (Refer to the chapter on wiring the receiver) When wiring receivers, be sure to double-check the terminal numbers of the indoor unit before connecting them so there are no mistakes in the wiring. (Damage will occur if high voltage [e.g. supply voltage] is applied)

(4) Attach the face plate.

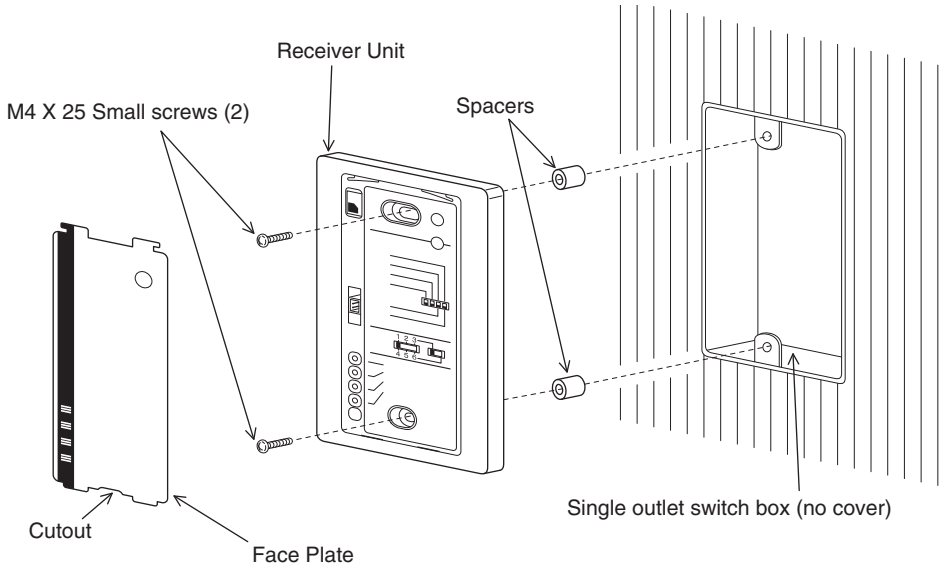

Fig. 3-24

2. Wireless Remote Controller

When using a separately installed receiver as an exposed model, attach it to a wall where the receiver can be affixed.

(1) Put a slotted screwdriver or the like into the groove on the bottom of the receiver unit and twist it to remove the bottom of the case. (Fig. 3-25)
(2) To enable the receiver's wiring to stick out from the upper part of the case (thin part at center-top), use side-cutters or the like to cut a hole in the case big enough for the remote control cord (sold separately). (Fig. 3-26)
(3) Disconnect the wires that were connected at shipment from the connector.
(4) After installing the remote control cord (sold separately) at the position in Fig. 3-27 with the enclosed cable tie, connect it to the connector on the receiver.
(5) Shape the remote control cord at the top of the PCB so it fits inside the receiver and after configuring the wiring like it is in Fig. 3-28, attach the lower case. When doing this, arrange the head of the cable tie so it face sideways.
(6) Remove the face plate and use the wood screws (2) to install the receiver unit.
(7) Use the cord clip that comes enclosed with the remote control cord to fasten it to the wall.
(8) Attach the face plate.

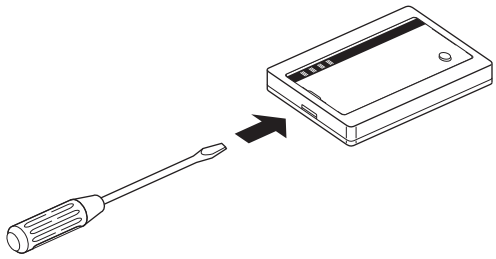

Fig. 3-25

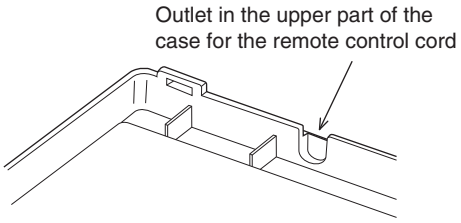

Fig. 3-26

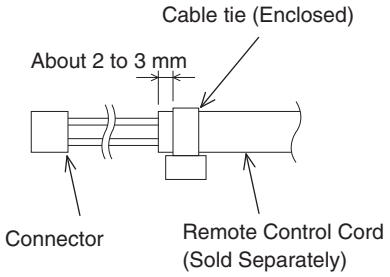

Fig. 3-27

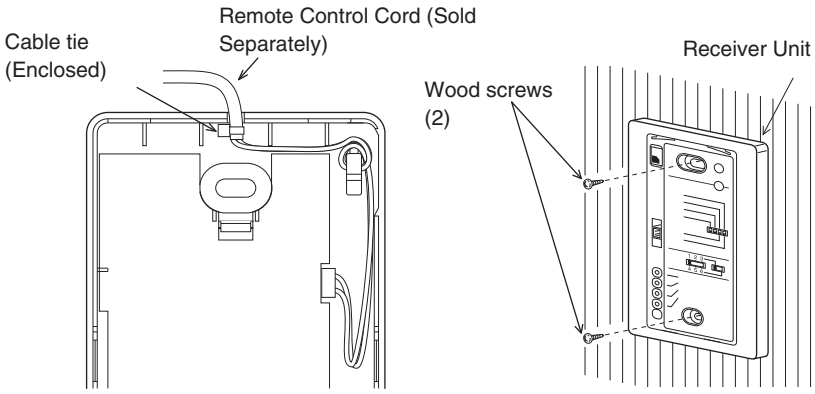

Fig. 3-28

2. Wireless Remote Controller

When using a receiver that has been installed separately into the ceiling, use the enclosed fittings for installing to a ceiling.

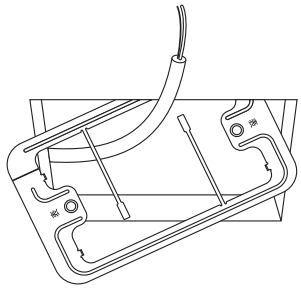

Fig. 3-29

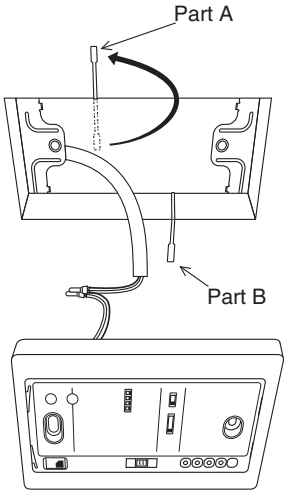

Fig. 3-30

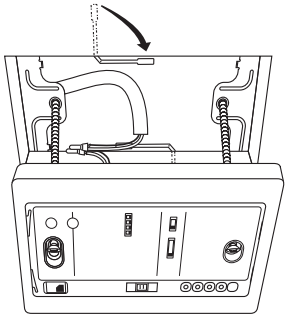

Fig. 3-31

(1) Remove the metal plate of the receiver by slipping a slotted screwdriver or the like into the cutout on the bottom.
(2) Cut out a hole in the ceiling to match the dimensions of the enclosed template. (95 X 51 mm)
(3) Pass the wiring through the enclosed installation metal fitting and put it into the hole. (Fig. 3-29)
(4) Bend parts A and B of the metal fitting so they hold onto the ceiling firmly. (Fig. 3-30)
(5) Connect the receiver's wiring (2 cores) with the wiring from the indoor unit. (Refer to the chapter on wiring the receiver) When wiring receivers, be sure to double-check the terminal numbers of the indoor unit before connecting them so there are no mistakes in the wiring. (Damage will occur if high voltage [e.g. supply voltage] is applied)
(6) Adjust the enclosed spacers so they are several millimeters thicker than the ceiling material and hold the receiver in place temporarily with the 2 enclosed small screws. (M4 X 40)
(7) Bend parts A and B back so they fit in the opening and are in the gap between the surface of the ceiling and the receiver; then tighten the screws. Do not use too much force when tightening the screws. Doing so may warp or damage the case. Move the receiver by hand and check that it can move just a little. (Fig. 3-31)
(8) Attach the face plate.

2-21. Wiring the Receiver

- Use wiring of 0.5 mm^2 to 2 mm^2 for field supply.
- Use a total wire length of no more than 400 m.
  Polarity does not matter.

If to be used as an embedded model ;

- **Wiring Diagram**

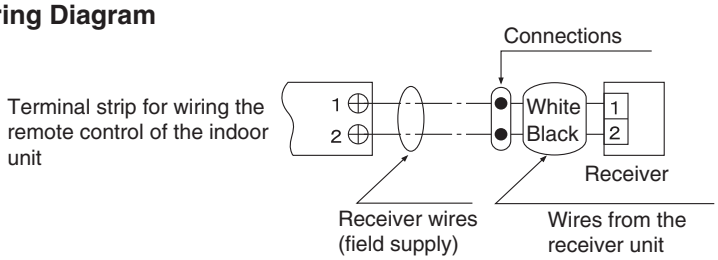

Enclosed wire joints (2, white)

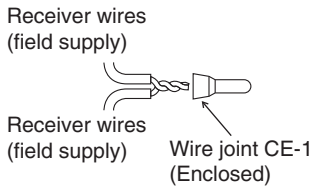

1. Strip the wire to be connected of its sheathing for 14 mm.
2. Twist the two wires together and crimp the enclosed wire joint.
3. If a special crimping tool is not used, or if the connection is made using solder, wrap the joint with insulating tape.

2. Wireless Remote Controller

If it is to be used as an exposed model:

- **Wiring Diagram**

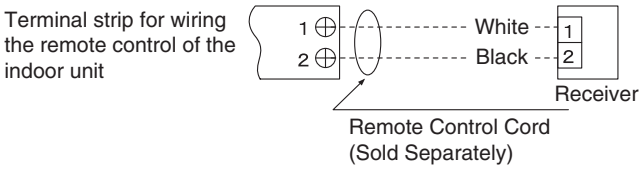

- Use remote control cord (sold separately) for wiring a separately installed receiver.

(1) For instructions on how to install a remote control cord (sold separately), refer to the chapter on Using as an Embedded Model in Installing Separate Receivers.

(2) If a remote control cord (sold separately) is to be used, refer to the Mounting Instructions attached to the remote control cord.

NOTE

(1) When wiring remote controls, be sure to double-check the terminal numbers of the indoor unit connecting them so there are no mistakes in the wiring. (Damage will occur if high voltage [e.g. supply voltage] is applied.)

(2) If the wiring to the operation panel is bundled together with other wiring, such as the incoming line from the power source, it can cause a malfunction, so avoid doing so.

(3) If something causes the unit's power source to make noise it will be necessary to resolve the problem, such as by installing a noise filter.

3

2-22. Setting Address Switches

- When more than one receiver and remote control are installed in the same room, setting up addresses allows them to avoid interfering with each other.
- Refer to the Users Manual for information on how to change the addresses of the remote controls.
- Changing the address of a receiver can be done after removing the screw to the receiver's PCB cover. Once the change is complete, put the cover back in place; while holding the wiring with the cable clamp, tighten its screw.

Address Display on the Remote Control	AL L	1	2	·····	6
Position of the Receiver's Address Switch	It doesn't matter where the receiver's address switch is.	1 2 3 / 4 5 6	1 2 3 / 4 5 6	·····	1 2 3 / 4 5 6

2-23. Test Operation

Implementing a Test Run

(1) Remove the face plate of the receiver's PCB and turn the DIP switch to RUN/On (Down → Up) and operate the wireless remote control with its Start/Stop button.

(2) During a test run, all display lamps on the display will light up.

(3) During a test run, it is not possible to adjust the temperature.

(4) After completing a test run, be absolutely sure to return the Test Run switch to OFF (Up → Down) and make sure none of the display lamps are blinking. Also, put the face plate back in place.

NOTE

(1) This is hard on the device, so only use this for the test run.

(2) After turning on the power, the unit will not receive any commands from the remote control for about 1 minute. This is not an error. (In fact it does receive signals, but they are cancelled.)

(3) Make sure to operate while the indoor unit is stopped.

(4) The address of indoor unit is set to "ALL" at the time of the shipment.

2. Wireless Remote Controller

■ **CZ-RWSY2**

2-24. Accessories

No.	Parts	Quantity
1	Receiver unit 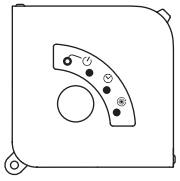	1
2	Remote Controller unit 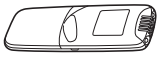	1

No.	Parts	Quantity
3	Remote Control Holder 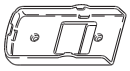	1
4	AAA alkaline batteries	2
5	Tapping screw 4x16	2
6	Clamper	1

2-25. Installing the Receiver Unit

As the receiver can only be installed in the corner where the panel wire comes out, as shown in Fig. 3-32, consideration should be given to orientation when fitting the panel to the indoor unit.

1. Twist off the circled area shown in Fig. 3-32 with pliers or similar.
2. Remove the suction grille and corner cover. (Fig. 3-33)

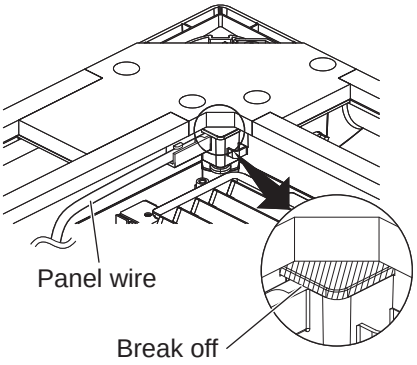

Fig. 3-32

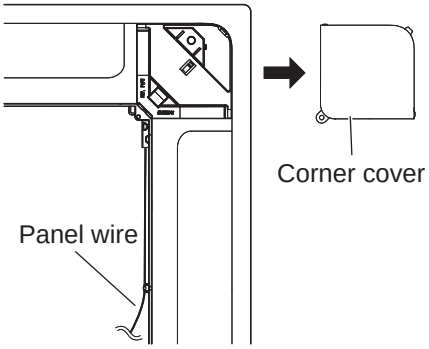

Fig. 3-33

3

2. Wireless Remote Controller

3. Pass the wire from the wireless receiver through the grille. (Fig. 3-34)
4. Fit the panel to the indoor unit and connect the wire from the receiver to the connector (CN130/WL/WHT/10P) on the indoor control board. (Fig. 3-35)
5. After fixing the panel in place, fit the receiver to the panel taking care not to trap the wire from the receiver.
6. Clamp the receiver wire and panel wire together with the supplied clamper. (Fig. 3-35)
7. Insert the receiver wire and panel wire into the wire saddles. (Fig. 3-35)
   * Refer to the Users Manual supplied with the panel.

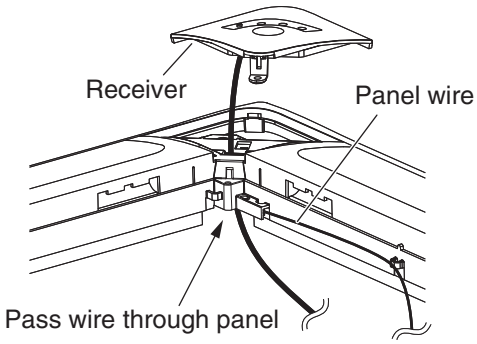

Fig. 3-34

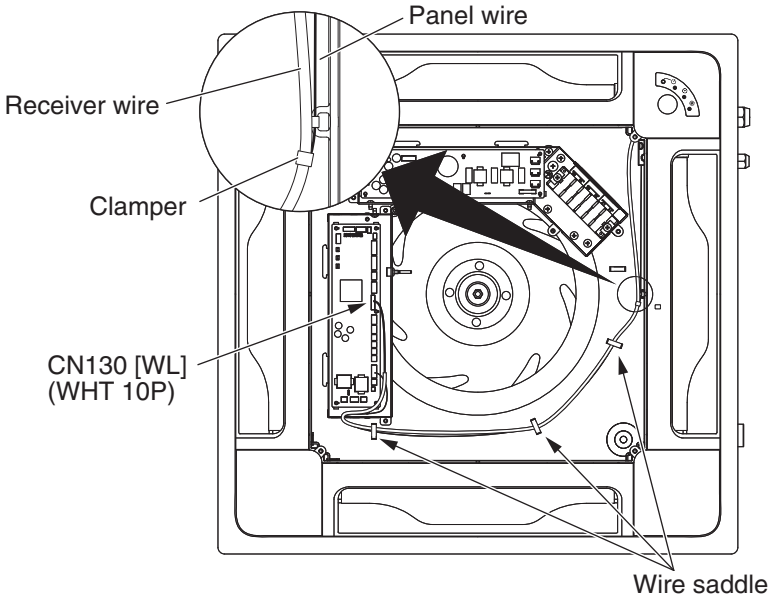

Fig. 3-35

3

NOTE

1. Do not twist the receiver wire and the power lead-in wire together as this could lead to malfunction.
2. If the unit power source is affected by noise, install a noise filter or take similar measures.

2. Wireless Remote Controller

■ Common to All Models

2-26. The Self-Diagnosis Function Display and What is Detected

Alarm Display in the table below indicates the content of alarms that are displayed when a wired remote control is connected. For information on how to deal with the alarms, refer to the Mounting Instructions for the indoor unit or to Test Run or servicing materials.

Error Detected		WL Remote Control LED Display			
	Alarm Display	Run	Timer	Standby	Blinking
Communication error in the remote control circuit	E01–E03, E08–E14, E17, E18	◎	●	●	
Communication error either in the in/outdoor operation line or the sub-bus of the outdoor unit	E04–E07, E15, E16, E19–E31	●	●	◎	
Operation of indoor protection device	P01, P09–P14	●	◎	◎	Alternately
Operation of outdoor protection device	P02–P08, P15–P31	◎	●	◎	Alternately
Error in the indoor thermistor	F01–F03, F10–F11	◎	◎	●	Alternately
Error in the outdoor thermistor	F04–F09, F12–F28	◎	◎	○	Alternately
Error in the indoor EEPROM	F29	◎	◎	●	Simultaneously
Error in the outdoor EEPROM	F30, F31	◎	◎	○	Simultaneously
Error related to the compressor	H01–H31	●	◎	●	
Error in indoor settings	L01–L03 L05–L09	◎	●	◎	Simultaneously
Error in outdoor settings	L04, L10–L31	◎	○	◎	Simultaneously
Inconsistency in Air/Heat (Including an auto-temp setting for a model without auto-temp settings)		○	◎	◎	Alternately
Oil Alarm (Same as operation of outdoor protection device)		◎	●	◎	Alternately
Test Run		◎	◎	◎	Simultaneously

● : Off / ○ : On / ◎ : Blinking (0.5 sec. intervals)

2-27. Room Temperature Sensor Settings
Common to All Models

- The indoor unit and the wireless remote control are equipped with indoor temperature sensors. The sensing of indoor temperature works via one of them.
- When the unit is shipped, it is set to the indoor unit, but to switch to the remote control, press the sensor button (diagram at right) inside the remote control's cover and then check to make sure that Main Sensor on the LCD screen goes off.

NOTE

Even when the Sensor switch has been set to the remote control, if the unit does not receive any room temperature data from the remote control for ten minutes, it automatically switches back to the indoor unit sensor, so be sure to install the remote control facing the receiver.

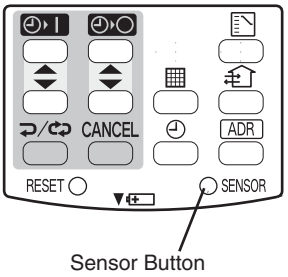

Fig. 3-36

3

2. Wireless Remote Controller

2-28. Setting Up Remote Control Functions

The functions of the wireless remote can be set on site.
(These settings are saved in nonvolatile memory in the remote control, so even when its batteries are changed, the settings do not revert to the defaults.)

NOTE

The operation of the air conditioner can be impacted, depending on the settings made, so only service personnel should make the settings.
Furthermore, making changes to these settings may cause actual operation to deviate from what is printed in the Users Manual, so be sure to explain this to the customer fully.

Making Settings (Do with unit stopped)

(1) Holding down the Swing/Wind Direction + OFF Timer ▲ + Mode Select buttons at the same time for 4 or more seconds makes the Display switch to the setting screen. (See diagram below.)

(2) Use the Temperature setting buttons, △ / ▽ , to select the number of the item to be set.

(3) Use the ON Timer buttons, ▲/▼ , to change settings.

(4) The settings are saved with the Once/Every Day button. When this is done, the settings display of the LCD changes from blinking to light.

(5) If other settings are to be changed as well, repeat steps 2 to 4.

(6) When all settings have been made, press the Start/Stop button.

Example: Operation mode setting screen

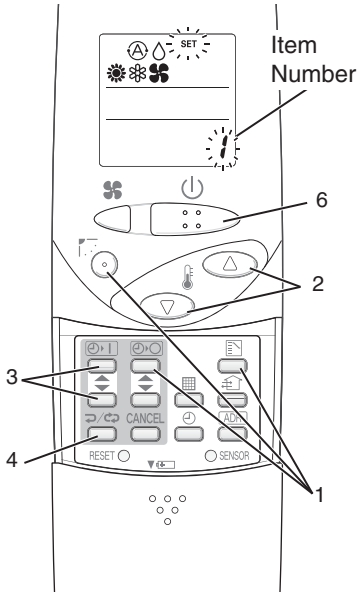

Item Number & Setting Item		Setting Content	Setting when Shipped
1	Operation Mode	→ → → → → →	
2	Flap Display	SWING → SWING → SWING → (No Display) (Note 1)	SWING
3	Select Fan Speed	→ → → (No Display)	
4	Display of Set Temperature	°C → °F → Setting Off (Note 2)	°C
5	Time Display	24 Hour (No Display) → AM/PM	24 Hour
6	Ventilation Fan ON/OFF	Off (No Display) → On	OFF(Note 3)
7	Cool temp Max	05 – 35°C	30
8	Cool temp Min	05 – 35°C	18
9	Heat temp Max	05 – 35°C	26 (Note 4)
10	Heat temp Min	05 – 35°C	16
11	Dry temp Max	05 – 35°C	30
12	Dry temp Min	05 – 35°C	18
13	Auto temp Max	05 – 35°C	27
14	Auto temp Min	05 – 35°C	17
16	Address Setting Max Value	00 (ALL only) → 01 – 31	06 (Note 5)
17	Heat temp Max ON/OFF	JP (Heater Max Temp Change Off) → EP (On)	JP

NOTE

(1) While the unit is in the swinging mode (Swing/Wind Direction), the flap cannot be stopped in a desired position.
(2) When Setting OFF is selected, "°C" is displayed on the LCD screen.
(3) You can toggle between ON and OFF by pressing Ventilation for 4 seconds or more.
(4) If the Heater Max ON/OFF setting is not changed to EP (ON), the setting change will not be reflected.
(5) This is the number of addresses that can be set in the address change mode. Do not set it to 07 or above.

3. Timer Remote Controller

Timer Remote Controller/CZ-RTC2

■ How to Use the Timer Remote Controller

Operating buttons

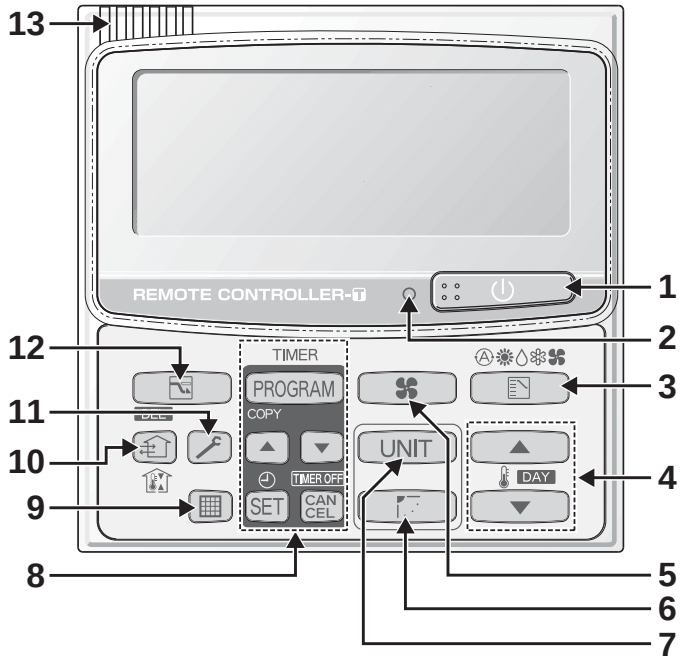

Display

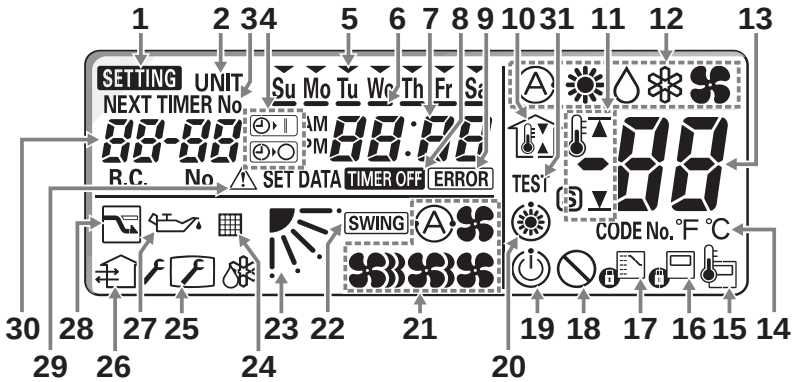

3

3. Timer Remote Controller

■ Names and Operations

Operation Section **(Refer to the previous page)**

1. **(Start/Stop) button**
   Pushing this button starts, and pushing again stops the unit.
2. **Operation lamp**
   The lamp is turned on when an air conditioner is in operation.
   This lamp blinks when an error occurs or a protective device is activated.
3. **(Mode select) button**
   Pushing this button to select an operation mode. (AUTO Ⓐ /HEAT☀ /DRY💧 /COOL❄ /FAN).
4. **Temperature setting buttons**
   Changing the temperature setting.
5. **(Fan speed) button**
   Changing the fan speed.
6. **(Swing/Air direction) button *1**
   Use this button to set the auto swing or air direction to a specific angle.
7. UNIT **(Unit select) button**
   When more than one indoor unit is operated by one remote control unit, this button is used to select a unit when adjusting the air direction.
8. **Timer setting buttons**
   (☞ Weekly Program Function)
9. **(Filter reset) button**
   Use this button to reset the filter sign.
   When ▦ is displayed, press this button after cleaning the filter.
10. **(Ventilation) button**
    Use this button when you installed a fan available in the market. Pressing this button turns on and off the fan. When turning off the air conditioner, the fan will be also turned off.
    (While the fan is operating, will appear in the display.)
    *If ⃠ is displayed on the LCD of the remote control unit when pressing the ventilation button, no fans are installed.
11. **(Inspection) button**
    Do not use this button.
12. **(Sleeping) button**
    (☞ Sleeping Function)
13. **Remote control sensor**
    Normally, the temperature sensor of the indoor unit is used to detect the temperature. However, it is also possible to detect the temperature around the remote control unit.

*1 Do not move the flap (vertical airflow adjustment board) with your hand.
- The flap is automatically directed down when the unit is stopped.
- The flap is directed up during the HEAT standby. The flap starts swinging after the HEAT standby is cancelled, although the AUTO flap indication on the remote control unit is displayed during the HEAT standby.

3

3. Timer Remote Controller

Display Section **(Refer to the page 3-35)**

1. **SETTING (Setting) indication**
   Appears when the timer program is being set.
2. **UNIT (Unit) indication**
   Indicates the unit No. of the indoor unit which is selected with the Unit select button, or the unit in which an abnormality occurs.
3. **TIMER No. (Timer No.) indication**
   Appears when the time program is being set.
4. **Timer program indication**
   : The indoor unit starts operation at the programmed time.
   : The indoor unit stops operation at the programmed time.
5. **(Today's day of the week) indication**
   Indicates today's day of the week.
6. **(Program schedule) indication**
   Appears under days that are scheduled for program operation.
7. **Present time indication**
   Displays the present time on a 24-hour clock. Also, displays settings in the various setting modes.
8. **TIMER OFF (Timer off) indication**
   Displayed when the timer has been turned OFF.
9. **ERROR (Error) indication**
   Displayed when a mistake is made during timer setting.
10. **(Outing) indication (Outing function)**
    Appears when the outing function is set.
11. **Upper and lower limit indication of the outing function**
    : Indicates the upper limit of the temperature
    : Indicates the lower limit of the temperature
12. **Operation Mode indication**
    Displays the selected operation mode. (AUTO /HEAT /DRY /COOL /FAN).
13. **Temperature indication**
    Indicates the set temperature.
14. **°F / °C (Temperature unit) indication**
15. **(Remote control sensor) indication**
    Appears when the remote control sensor is used.
16. **(Centralized control) indication**
    Appears when operated in centralized control. If the remote control operation is not permitted to the remote unit, when the Start/Stop button, Mode select button or Temperature setting button is pressed, flashes and rejects the change.
17. **(Operation mode change control) indication**
    Displays when an operation mode is entered by the remote control unit, while another operation mode has been already selected. This indicates that the operation mode cannot be changed.
18. **(Disabled feature) indication**
    Displayed if the selected feature was disabled during installation.
19. **Peak cut mode (Demand)/GHP operation standby indication**
    Appears during the peak cut mode (Demand) if an electric heat pump (EHP) air conditioner is used or during standby if a gas heat pump (GHP) air conditioner is used.
20. **(Heating standby mode) indication**
    Appears when the fan of the indoor unit is stopped or in low fan speed.
21. **/ / / (Fan mode select) indication**
    The selected fan mode is displayed.
22. **SWING (Swing) indication**
    Appears while the flap swings.
23. **(Flap position) indication**
    Indicates the flap position.
24. **(Filter) indication**
    Appears when filter needs cleaning. Clean the filter.
25. **(Maintenance function) indication**
    Appears when the maintenance function (monitoring sensor temperatures) is activated.
26. **(Ventilation) indication**
    Appears when a fan available in the market is installed and is operating.
27. **(Oil) indication**
    Appears when the engine oil needs to be changed. (Appears when the gas heat pump air conditioner is used.)
28. **(Sleeping) indication**
    Appears during the sleeping function.
29. **(Caution) indication**
    Appears when the protective device is activated or when an abnormality occurs.
30. **Unit No. indication**
    Indicates the unit No. of the selected indoor unit.
31. **TEST (Test) indication**
    Appears while in test operation.

3. Timer Remote Controller

■ Setting the Present Time

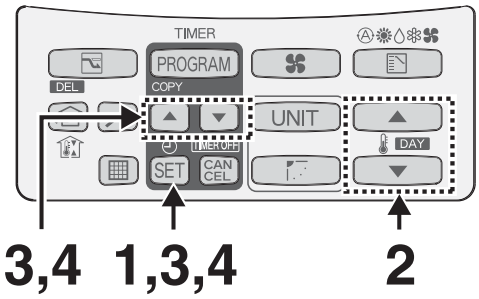

1. **Press and hold SET for more than 2 seconds to enter the present day and time setting mode.**
   Once you enter the setting mode, SETTING, "▼"(day) and "time" flash.
2. **Set "▼" to today's day of the week.**
   Press DAY *1 ▲ to move "▼" (flashing on the display) in the order of : Su → Mo → Tu → .... Press ▼ to move it in the order of : Su → St → Fr → ....
   *1 While in time setting mode, the temperature setting buttons function as DAY (changing day) button.
3. **Press ▲ ▼ to change the present "hour" in the range of 0 to 23*2.**
   Set the present hour and press SET.
   The "hour" digits light up, and the "minute" digits start flashing.
   *2 If the clock uses the 12 hours AM/PM setting, the hour is displayed in the range of AM 0 to 11/PM 0 to 11.

4. **Press ▲ ▼ , to change the present "minute" in the range of 0 to 59.**
   Set the present minute and press SET. The day and time are set and the unit finishes the setting mode.

NOTE

- The unit returns to the normal mode if CANCEL is pressed or there is no operation made for 3 minutes during the setting. In this case, all the settings in progress will be lost.
- If the present time is invalid, "– – : – –" is displayed.
  If the power failure for more than 1 hour occurs, check if the set data of day and time are valid.

3

3. Timer Remote Controller

■ Weekly Program Function

Checking Weekly Timer

Set the weekly program assigning a given timer to each day of the week.
Maximum of 6 programs a day and 42 programs a week can be set.
Select the day and the TIMER number you want to program.

Program image diagram

Vertical scale indicates the TIMER No., and horizontal scale indicates the day.

* If the day is changed, the TIMER No. returns to "1".

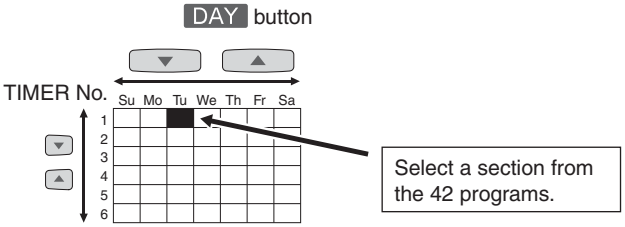

1. **Press PROGRAM to enter the program confirmation mode "CH" and start setting.**
   Once you enter the program confirmation mode, the present day is indicated as TIMER No. "1".
2. **Select the day.**
   Press DAY and ▲ / ▼ to move the "▼" horizontally on the day to select.
   Press ▲ to move "▼" (flashing on the display) in the order of : Su → Mo → Tu....
   Press ▼ to move it in the order of : Su → Sa → Fr....
   "– – : – –" is displayed when the program is not set.
3. **Select a Timer number.**
   Press ▲ / ▼ to select a TIMER No. from 1 to 6.
   Press ▲ to move up from 1.
   Press ▼ to move down from 6.

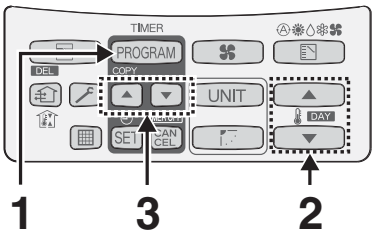

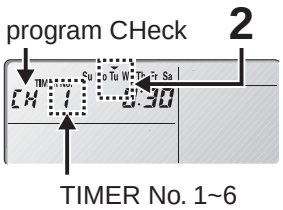

3

3. Timer Remote Controller

- Changing the Program Timer

To set the weekly program, follow the steps below.

1. **Select the program you want to set in the program confirmation mode, and press SET. This enters the setting mode of the program currently displayed.**
   * In the program setting mode, SETTING, "hour", "minute" and "item" flash on the display.
2. **Set the "hour". (program step 1)**
   Press ▲ / ▼ to set the "hour".
   Confirm the "hour" and press SET. This enters the program changing mode P2 (setting of the "minute").
3. **Set the "minute". (program step 2)**
   Press ▲ / ▼ to set the "minute".
   Confirm the "minute" and press SET.The unit enters P3 (the program pattern selection mode).

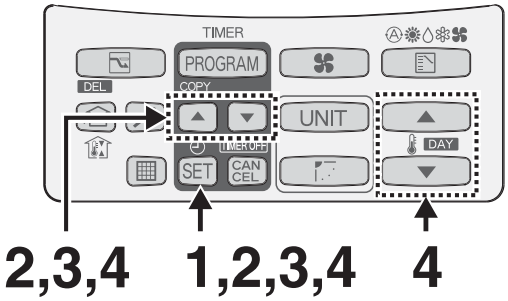

Program step1

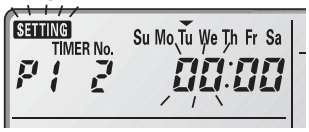

Program step2

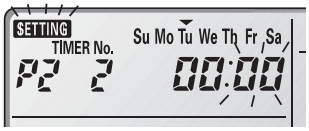

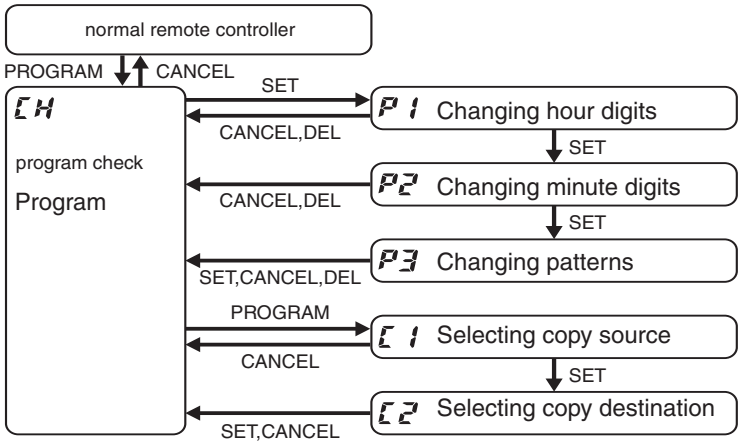

3

■ Weekly Program Function (Continued)

4. Set the program pattern. (program step 3)

There are 4 program patterns.

Pressing ▲ / ▼ repeats the following display patterns.

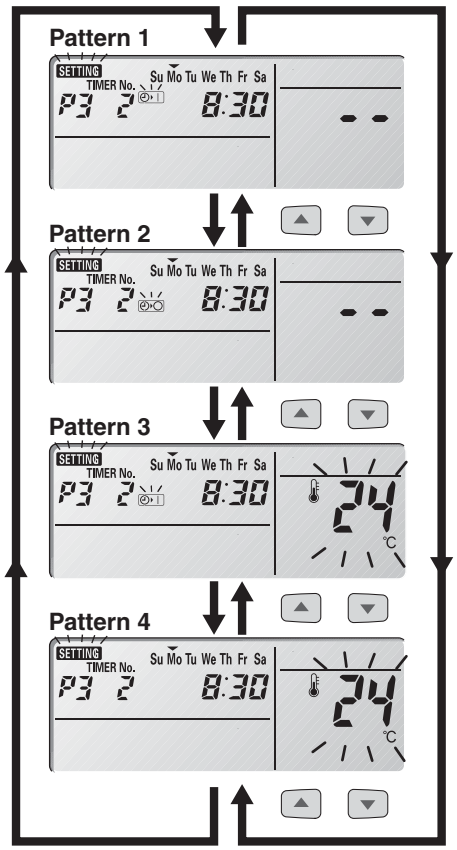

Pattern 1

The indoor unit starts operation at the programmed time.

Pattern 2

The indoor unit stops operation at the programmed time.

Pattern 3

The indoor unit starts operation at the programmed time and changes the temperature settings.

Press ▲ / ▼ to change the temperature setting.

Pattern 4

The indoor unit changes the temperature setting at the programmed time.

Press ▲ / ▼ to change the temperature setting.

Select the program pattern and press SET. The program timer setting is confirmed and the unit enters the confirmation mode CH.

NOTE

- If you press CANCEL during the setting, it returns to the program confirmation mode.
- If there is no operation made for 3 minutes during the setting, it returns to the normal mode.
  In this case, all the settings in progress will be invalid.

3. Timer Remote Controller

- **Deleting the Program Timer**

To delete the program timer setting, follow the steps below.

1. **Press PROGRAM to enter the program confirmation mode.**
2. **Press ▲ / ▼ to select the day of the program you want to delete.**
3. **Press ▲ / ▼ to select a TIMER No. (from 1 to 6).**
4. **Press SET to display the program setting mode P1.**
5. **Press DEL to delete the program.**

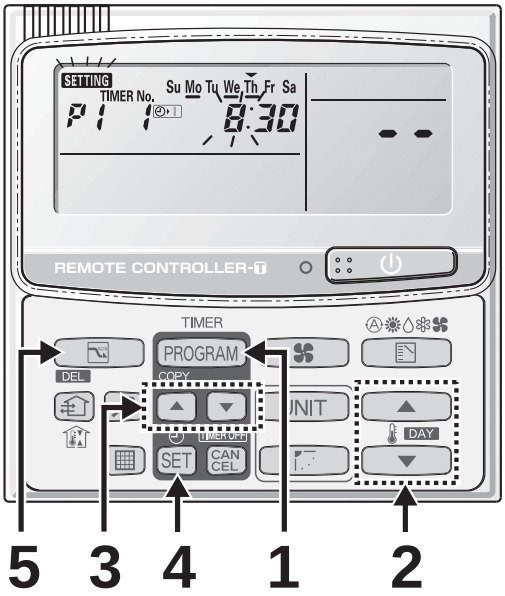

NOTE

- After deleting, the unit returns to the program confirmation mode CH.
- If you press CAN CEL during the setting, the unit returns to the program confirmation mode.
- If there is no operation made for 3 minutes during the setting, the unit returns to the normal mode.

- **Invalidating Program Timer**

If you want to adjourn the program operation for more than 1 week, you can invalidate all the timer settings.
Once the timer settings are invalidated, the program will not be operated until the invalidation is cancelled.

<<How to invalidate the program timer>>

Press and hold TIMER OFF / CAN CEL for more than 2 seconds.
TIMER OFF is displayed and the programs will be invalidated from the next one.

<<How to cancel the program timer invalidation>>

Press and hold TIMER OFF / CAN CEL for more than 2 seconds.
TIMER OFF disappears and the programs will be validated from the next one.

If Power Failure Occurred

If the power recovers in a short time period, the program after the recovered time will be valid.
If the power recovered more than 1 hour after the failure, the present time information will be lost. In this case, the program will not be operated.

3. Timer Remote Controller

■ Weekly Program Function (Continued)

● Duplicating the Program Timer

You can duplicate the preset program by day.

Select the copy source.

1. If PROGRAM is pressed in program checking mode CH, it enters the copy mode (Selecting the copy source C 1) of the program timer.
   While in the copy mode of the program timer, SETTING and ▼ (day) of the copy source flash on the display.
2. Press ▲ / ▼ to select the day of the copy source. Select the copy destination.
3. If SET is pressed in the mode of selecting the copy source C 1, it enters the copy mode (Selecting the copy destination C2) of the program timer.
4. Press ▲ / ▼ to select the day of the copy source. Then, press SET to complete copying and return to the program checking mode.

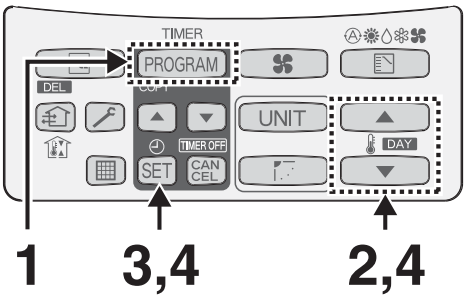

NOTE

The program will be overwritten if the preprogrammed day is selected as a copy source.

● Before Asking Repair Work

Before asking repair work, please check the followings.

Trouble	Possible Cause/Remedy
"ERROR" is displayed when the minute digits are entered.	If there is another TIMER No. which has the program of the same time and same day, you cannot overlap the setting.
The set data is not stored.	The stored programs are automatically sorted by the time. Check if the data is stored in the other TIMER No.
Program does not function.	Check if the time indication is not "– – : – –". When the time is invalid, the program is also invalid.
	Check the remote controller prohibition inside. In that case, the program is invalid.

3

3. Timer Remote Controller

■ Outing Function

Outing function is a function that prevents the room temperature from increasing too much (or decreasing too much) when no one is in the room.
An air conditioner works automatically if this function is set effective.

General Performance of the Outing Function

COOL / DRY

① The air conditioner starts operation when the room temperature increases up to –1°C of the upper limit.

② The air conditioner stops operation when the room temperature decreases up to –2°C of the upper limit.

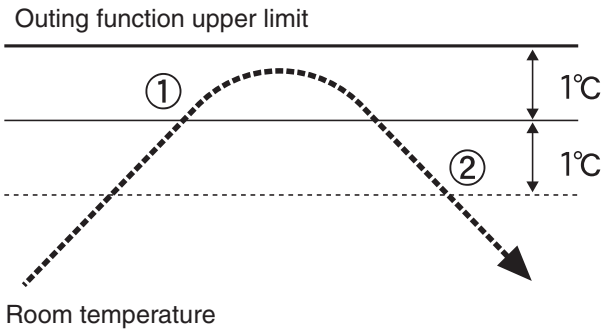

HEAT

① The air conditioner starts operation when the room temperature decreases up to +1°C of the lower limit.

② The air conditioner stops operation when the room temperature increases up to +2°C of the lower limit.

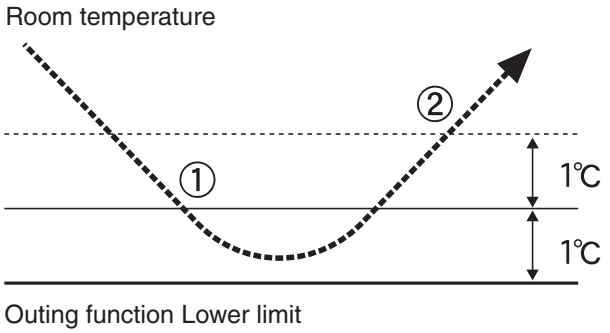

[Precautions]

- The outing control only starts/stops the air conditioner. It does not change the operation mode/temperature setting. Therefore, the operation mode/temperature needs to be set beforehand so that the outing function turns on the air conditioner with your desired operation mode/ temperature setting.
- If the room temperature rapidly changes, the room temperature may get over the upper or lower limit when the outing function is activated.
- The outing function is invalid during FAN/AUTO operation mode.
- The air conditioner's stop order (stated in ② /above) is valid only when the outing function is operated.
  If operated using other remote control unit (or a centralized control device such as a system control), the outing function does not work.

3. Timer Remote Controller

■ Outing Function (Continued)

● **Setting the Outing Function**

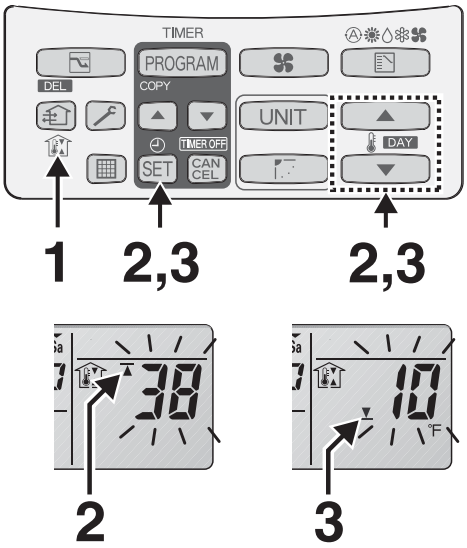

1. **Press and hold for more than 2 seconds to display the upper limit temperature setting screen.**
   , and the upper limit temperature start flashing.
   (The default value of the upper limit temperature is 38 °C.)
2. **Press / to select the upper limit temperature, and press SET to fix the value. The lower limit temperature setting screen is displayed.**
3. **Press / to select the lower limit temperature, and press SET to fix the value. The outing function setting is completed. (The default value of the lower limit temperature is 10 °C.)**

* The unit returns to the normal mode if CAN CEL is pressed or there is no operation made for 3 minutes during the setting. In this case, all the settings in progress will be lost.

● **Canceling the outing function**

Press and hold for more than 2 seconds while the outing function is set.

● **Outing function indication**

Outing function indication	Status
Off	The outing function is not set.
Flashing	The outing function is now being set, or under operation.
Lighting	Although the outing function is set, not under operation.

NOTE

A remote controller loses outing function operation information when it is cut for more than one hour during the outing function operation by electricity. It reverts from the blackout, and an air conditioner does not drive in outing function when operation is started. At this time, an air conditioner does not stop at outing function.

3. Timer Remote Controller

■ Sleeping Function

* This function leads you to a comfortable sleep and changes the room temperature during your sleep.
* You can set the off timer every one hour from 1 to 10 hours.

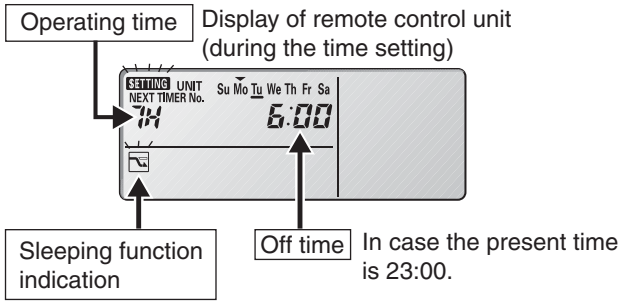

Display of remote control unit (during sleeping function setting)

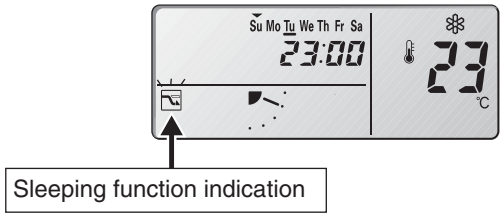

* If no operation is made for 3 minutes, the time setting mode will be automatically finished.

Ex. In case of 7 hours timer

1. Press [ ].

- Each time the button is pressed, the indication changes in the following order.

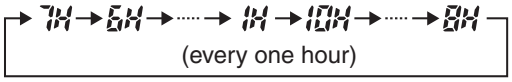

(Press [CANCEL] to stop the time setting.)

2. Press [SET].

- The sleeping operation starts.

When the off time comes:

- The indoor unit stops.
  * The temperature returns to the setting at the time when sleeping function operation started.

To cancel the sleeping function operation:

- Press [ ].
  * The temperature setting remains at the time cancelled.
- The following buttons also cancel the sleeping function operation.
  [ ] button
  Stop the indoor unit after the sleeping function operation is cancelled.
  [ ] button
  Changes the operation mode after the sleeping function operation is cancelled.

3

■ Sleeping Function (Continued)

- **If button does not work.**

Or if the operation does not start even if SET is pressed.

Check the following table.

Item	Display of the remote control unit (Lighting/flashing indication)	Contents
1	ERROR The Error indication flashes (for several seconds).	The clock is not set.
2	⃠ "This function is not available" indication lights up (for several seconds).	When the operation mode is set to AUTO or FAN, this function is not available.
3	Centralized control indication flashes (for several seconds).	The centralized control device is prohibited from starting/ stopping the unit or change the temperature setting.

The sleeping function operation will be cancelled in the following cases:

1: When the unit is operated to stop or change the temperature setting by the other remote control unit or centralized control device.

2: When the unit is operated to stop or change the temperature setting with the weekly program function / outing function.

3: When the centralized control unit is prohibited from stopping the unit or changing the temperature setting.

NOTE

Trouble	Possible Cause/Remedy
The temperature setting does not decrease (increase).	The temperature over the upper or lower limit or each operation mode cannot be set.
Operation under the sleeping function does not finish.	Note if you change the time after the sleeping function started. The operation does not finish until it reaches to the set starting time.

3. Timer Remote Controller

■ INSTALLATION MANUAL FOR TIMER REMOTE CONTROLLER

Accessories for remote controller switch

① Remote controller	② Wood screws	③ Wire joints	④ Operation manual	⑤ Installation manual
(with 200mm wire)			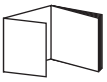	

■ How to install the remote controller

- Do not supply power to the unit or try to operate it until the tubing and wiring to the outdoor unit is completed.
- Do not twist the control wiring with the power wiring or run it in the same metal conduit, because this may cause malfunction.
- Install the remote controller away from sources of electrical noise.
- Install a noise filter or take other appropriate action if electrical noise affects the power supply circuit of the unit.
- When wiring, do not connect the remote controller wires to the adjacent terminal block for the power wiring. Otherwise, the unit will break down.
- Install wiring correctly(incorrect wiring will damage the equipment).

The mounting position for the remote controller should be located in an accessible place for control.
Never cover the remote controller or recess it into the wall.

(1) When you open the decorative cover (Fig. 3-41), you will see 2 gaps under the remote controller.
Insert a coin into these gaps and pry off the back case.

(2) Attach the back case with the 2 wood screws (②) provided. Using a screwdriver, push open the cut-outs on the back case.
These holes are for screws. (Fig. 3-42)

(3) Connect the remote controller wiring (2 wires) correctly to the corresponding terminals in the electrical component box of the indoor unit.

(4) To finish, fit the back tabs of the case into the remote controller and mount it.

3

■ Basic Wiring Diagram

● Connection diagram

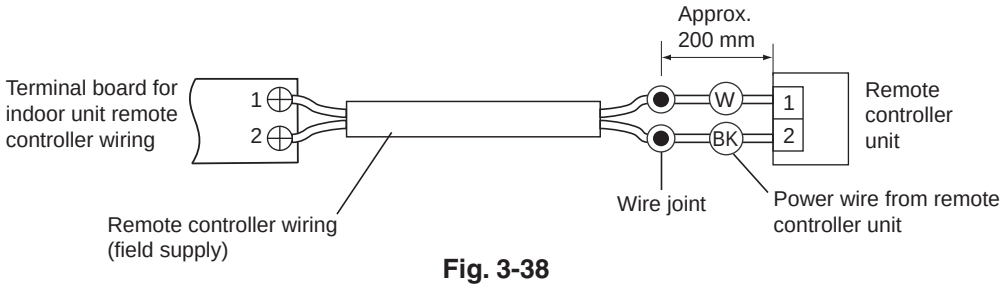

Fig. 3-38

3. Timer Remote Controller

- Use 0.5mm^2 - 1.25mm^2 wires.
  Remote controller wiring can be extended to a maximum of 500m.

(1) Strip the insulation to approximately 14 mm from the ends of the wires that will be connected.

(2) Twist together the 2 wires and create a crimp connection at the wire joint.

(3) If a special crimping tool is not used, or if the connection is soldered, insulate the wires using insulation tape.

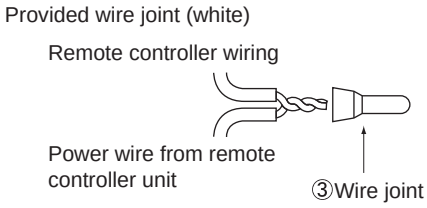

Fig. 3-39

■ Group control using 2 remote controllers

It does not matter which of the 2 remote controllers you set as the main controller. When using multiple remote controllers (up to 2 can be used), one serves as the main remote controller and the other as the sub-remote controller.

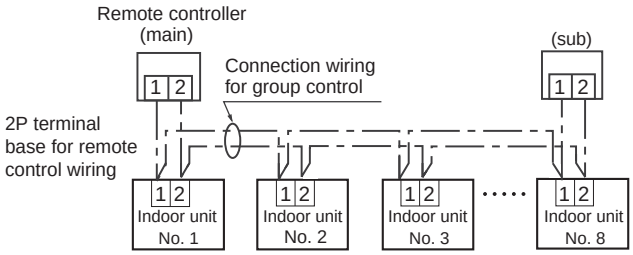

Fig. 3-40

■ Remote controller setting mode

To set the remote controller main/sub setting or change the sensor, follow the steps below.

① Press both [ ] and [SET] buttons on the remote controller for more than 4 seconds together.

② Select CODE No. with [▲] / [▼] ([🌡]) buttons.

③ Change DATA with [▲]/[▼] (TIMER) buttons.

④ Press [SET] . Finally, press [🔧] .

* DATA is memorized in the RCU. (DATA setting will not be changed even when the power is turned off.)

* Make sure to set [Normal] for RCU. CK.

CODE	ITEM	DATA	
		0000	0001
01	RCU. Main/Sub	Sub	Main
02	Clock display	24 hours	12 hours (AM/PM)
08	RCU. CK	RCU. CK	Normal
0A	Room temperature sensor	Main unit	RCU

■ Indoor unit setting mode

To select the ventilation setting or change the temperature unit, follow the steps below.

① Press [🔧] + [SET] + [CANCEL] buttons on the remote controller for more than 4 seconds together.

② Select CODE No. with [▲] / [▼] ([🌡]) buttons.

③ Change DATA with [▲]/[▼] (TIMER) buttons.

④ Press [SET] . Finally, press [🔧] .

* DATA is memorized in the indoor unit. (DATA setting will not be changed even when the power is turned off.)

CODE	ITEM	DATA	
		0000	0001
31	Vent. button	No	Yes
33	Temperature unit	°C	°F

■ To display the sensor temperature:

- Press both [CANCEL] and [🔧] buttons on the remote controller for more than 4 seconds together.
- Change the sensor address (CODE No.) with [▲] / [▼] ([🌡]) buttons.
- Select the UNIT No. which you want to call with the [UNIT] button.
- Press the [🔧] button to finish service mode.

■ To display the trouble history:

- Press both [SET] and [🔧] buttons on the remote controller for more than 4 seconds together.
- Change the alarm message: [▲] / [▼] ([🌡]) buttons
- Press the [🔧] button to finish service mode.

CODE No. 01→04
(New) (Old)

3

3. Timer Remote Controller

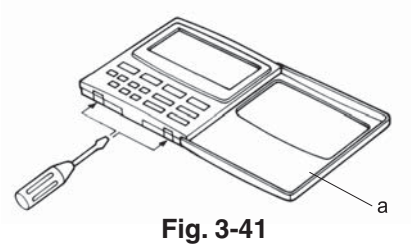

Fig. 3-41

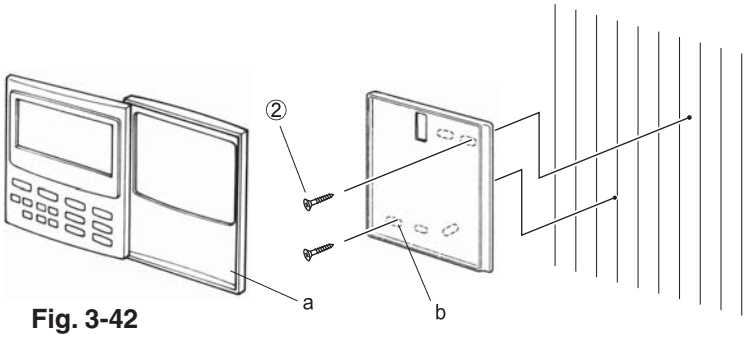

Fig. 3-42

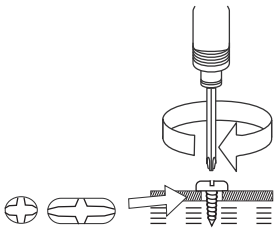

When mounting the back case to the electric junction box, tighten the screws securely until the screw heads touch the back case.
Otherwise, a loose screw head may damage the PCB on the back of the top cover when mounting the top cover.
But do not over-tighten the screws. Overtightening may deform the back case and cause the unit to fall.

Caution when installing the remote controller

*1 Install the remote controller more than 95 mm apart from the wall surface.
*2 To install the remote controllers side-by-side, keep the space between each for more than 125 mm.
*3 To install the remote controllers one above the other, keep the space between each for more than 25 mm.

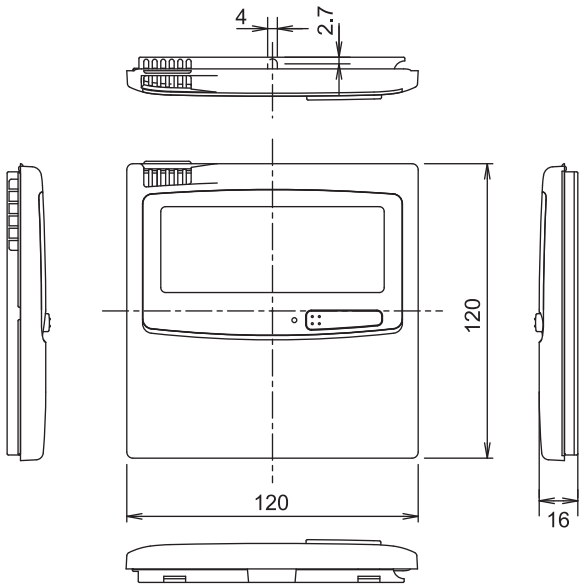

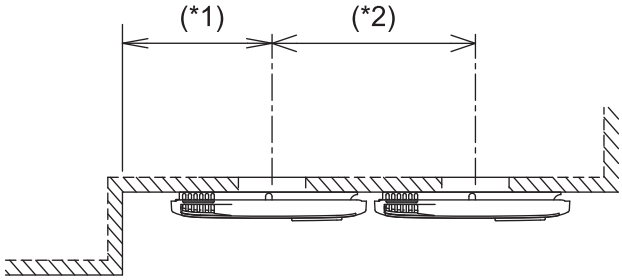

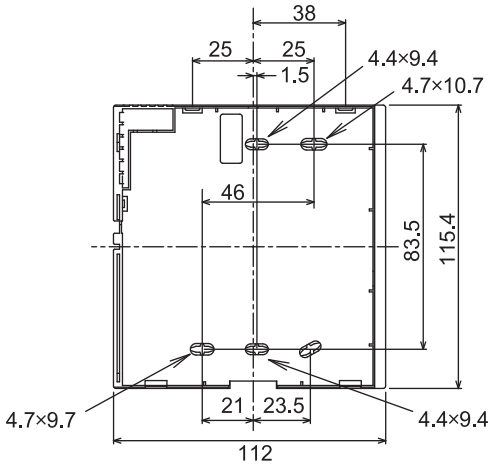

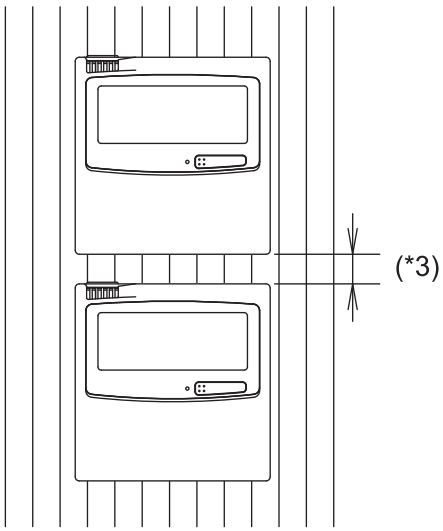

3. Timer Remote Controller

■ Meaning of Alarm Messages

Table of Self-Diagnostics Functions and Description of Alarm Displays

Possible cause of malfunction			Alarm message
Serial communication errors Mis-setting	Remote controller is detecting error signal from indoor unit.	Error in receiving serial communication signal. (Signal from main indoor unit in case of group control) Ex: Auto address is not completed.	<E01>
		Error in transmitting serial communication signal.	<E02>
	Indoor unit is detecting error signal from remote controller (and system controller).		≪E03≫
	Indoor unit is detecting error signal from main outdoor unit.	Error in receiving serial communication signal. When turning on the power supply, the number of connected indoor units does not correspond to the number set. (Except R.C. address is “0.”)	E04
		Error of the main outdoor unit in receiving serial communication signal from the indoor unit.	<E06>
	Improper setting of indoor unit or remote controller.	Indoor unit address setting is duplicated.	E08
		Remote controller address connector (RCU. ADR) is duplicated. (Duplication of main remote controller)	≪E09≫
	During auto address setting, number of connected units does not correspond to number set. When turning on the power supply, number of connected units does not correspond to number set. (Except R.C. address is “0.”)	Starting auto address setting is prohibited. This alarm message shows that the auto address connector CN054 is shorted while other RC line is executing auto address operation.	E12
		Error in auto address setting. (Number of connected indoor units is less than the number set.)	E15
		Error in auto address setting. (Number of connected indoor units is more than the number set.)	E16
		No indoor unit is connected during auto address setting.	E20
		Main outdoor unit is detecting error signal from sub outdoor unit.	E24
		Error of outdoor unit address setting.	E25
		The number of connected main and sub outdoor units do not correspond to the number set at main outdoor unit PCB.	E26
		Improper wiring between main outdoor unit and sub-unit.	E27
		Error of sub outdoor unit in receiving serial communication signal from main outdoor unit.	E29
		Serial transmission failure of outdoor unit.	E30
	Communications trouble between units	Communication failure with MDC	E31
	Indoor unit communication error of group control wiring.	Error of main indoor unit in receiving serial communication signal from sub indoor units.	E18

Continued

3. Timer Remote Controller

Possible cause of malfunction				Alarm message
Serial communication errors Mis-setting	Improper setting.	This alarm message shows when an indoor unit for multiple-use is not connected to the outdoor unit.		L02
		Duplication of main indoor unit address setting in group control.		<L03>
		Duplication of outdoor R.C. address setting.		L04
		There are 2 or more indoor unit controllers that have operation mode priority in refrigerant circuit.	Priority set remote controller	L05
			Non-priority set remote controller	L06
		Group control wiring is connected to individual control indoor unit.		L07
		Indoor unit address is not set.		L08
		Capacity code of indoor unit is not set.		≪L09≫
		Capacity code of outdoor unit is not set.		L10
		Mis-matched connection of outdoor units that have different kinds of refrigerant.		L17
		4-way valve operation failure		L18
Activation of protective device	Protective device in indoor unit is activated.	Thermal protector in indoor unit fan motor is activated.		≪P01≫
		Improper wiring connections of ceiling panel.		≪P09≫
		Float switch is activated.		≪P10≫
		Operation of protective function of fan inverter.		P12
	Protective device in outdoor unit is activated.	Compressor thermal protector is activated. Power supply voltage is unusual. (The voltage is more than 260 V or less than 160 V between L and N phase.)		P02
		Incorrect discharge temperature. (Comp. No. 1)		P03
		High pressure switch is activated.		P04
		Negative (defective) phase.		P05
		O_2 sensor (detects low oxygen level) activated		P14
		DCCT overcurrent or ACCT overcurrent		P16
		Incorrect discharge temperature. (Comp. No. 2)		P17
		Compressor 3 discharge temp. failure		P18
		High load alarm		P20
		Outdoor unit fan motor is unusual.		P22
		IPM trip (IPM current or temperature)		H31
		Inverter for compressor is unusual. (DC compressor does not operate.)		P29
Thermistor fault	Indoor thermistor is either open or damaged.	Indoor coil temp. sensor (E1)		≪F01≫
		Indoor coil temp. sensor (E2)		≪F02≫
		Indoor coil temp. sensor (E3)		≪F03≫
		Indoor suction air (room) temp. sensor (TA)		≪F10≫
		Indoor discharge air temp. sensor (BL)		≪F11≫
	Outdoor thermistor is either open or damaged.	Comp. No. 1 discharge gas temp. sensor (DISCH1)		F04
		Comp. No. 2 discharge gas temp. sensor (DISCH2)		F05
		Outdoor No. 1 coil gas temp. sensor (EXG1)		F06
		Outdoor No. 1 coil liquid temp. sensor (EXL1)		F07
		Outdoor air temp. sensor (AIR TEMP)		F08
		Compressor intake port temperature sensor (RDT)		F12
		High pressure sensor. Negative (defective) N phase.		F16
		Low-pressure sensor failure		F17
		Compressor 3 discharge temp. sensor failure (DISCH3)		F22
		Outdoor No. 2 coil gas temp. sensor (EXG2)		F23
		Outdoor No. 2 coil liquid temp. sensor (EXL2)		F24

Continued

3. Timer Remote Controller

Possible cause of malfunction			Alarm message
EEPROM on indoor unit PCB failure			F29
Protective device for compressor is activated	Protective device for compressor No. 1 is activated.	EEPROM on the main or sub outdoor unit PCB has failed.	F31
		Current is not detected when comp. No. 1 is ON.	H03
	Protective device for compressor No. 2 is activated.	Compressor No. 2 current trouble (overcurrent)	H11
		Compressor No. 2 current trouble (locked)	H12
		Compressor No. 2 CT sensor disconnected or short circuit	H13
		Compressor No. 2 discharge temp. sensor disconnected	H15
	Protective device for compressor No. 3 is activated.	Compressor No. 3 current trouble (overcurrent)	H21
		Compressor No. 3 current trouble (locked)	H22
		Compressor No. 3 CT sensor disconnected or short circuit	H23
		Compressor No. 3 discharge temp. sensor disconnected	H25
		Low pressure switch is activated.	H06
	Oil sensor fault. (Disconnection, etc.)	Comp. No. 1 oil sensor	H08
		Comp. No. 2 oil sensor	H27
		Oil sensor (connection) failure	H28

Alarm messages displayed on system controller			
Serial communication errors Mis-setting	Error in transmitting serial communication signal	Indoor or main outdoor unit is not operating correctly. Mis-wiring of control wiring between indoor unit, main outdoor unit and system controller.	C05
	Error in receiving serial communication signal	Indoor or main outdoor unit is not operating correctly. Mis-wiring of control wiring between indoor unit, main outdoor unit and system controller. CN1 is not connected properly.	C06
Activation of protective device	Protective device of sub indoor unit in group control is activated.	When using wireless remote controller or system controller, in order to check the alarm message in detail, connect wired remote controller to indoor unit temporarily.	P30

NOTE

1. Alarm messages in << >> do not affect other indoor unit operations.
2. Alarm messages in < > sometimes affect other indoor unit operations depending on the fault.

4. Simplified Remote Controller

Simplified Remote Controller / CZ-RE2C2

■ Important Safety Instructions

Before using the system, be sure to read these "Important Safety Instructions".
After reading this manual, save it in a convenient place.

⚠ Warning

*** Installation Precautions**

1. Do not install by yourself.
   Installation should always be performed by your dealer or a professional service provider.
   Electric shock or fire may result if an inexperienced person performs any installation or wiring procedures incorrectly.
2. Use only specified air conditioners.
   Always use only air conditions specified by the dealer.

*** Moving and Repair Precautions**

1. Do not repair.
   Never repair the system by yourself.
2. Contact your dealer before moving the system.
   Contact your dealer or a professional service provider about moving and reinstalling the system.
   Electric shock or fire may result if an inexperienced person performs any installation procedures incorrectly.

*** Precautions for Use**

1. Do not touch switches with wet hands.
   Electric shock and damage to the system can result.
2. Protect the remote controller from water.
   Damage to the system can result.
3. Stop the system and turn the power off if you sense unusual smells or other irregularities.
   Continuing operation when the system is out of order can result in electric shock, fire, and damage to the system. Contact your dealer.
4. Do not turn the air conditioner on and off from the power mains switch.
   Use the ON/OFF operation button.
5. Do not stick anything into the air outlet of the air conditioner.
   Doing so is dangerous because the fan is rotating at high speed.
6. Do not let children play with the air conditioner.
7. Do not cool or heat the room too much if babies or invalids are present.
8. Do not wipe the remote controller with benzine, thinner, or chemical cloth.

NOTE

- This device complies with Part 15 of the FCC Rules. Operation is subject to the following two conditions: (1) This device may not cause harmful interference, and (2) this device must accept any interference received, including interference that may cause undesired operation.
- This equipment has been tested and found to comply with the limits for a Class B digital device, pursuant to part 15 of the FCC Rules. These limits are designed to provide reasonable protection against harmful interference in a residential installation. This equipment generates, uses and can radiate radio frequency energy and, if not nstalled and used in accordance with the instructions, may cause harmful interference to radio communications. However, there is no guarantee that interference will not occur in a particular installation. If this equipment does cause harmful interference to radio or television reception, which can be determined by turning the equipment off and on, the user is encouraged to try to correct the interference by one or more of the following measures:
  - Reorient or relocate the receiving antenna.
  - Increase the separation between the equipment and receiver.
  - Connect the equipment into an outlet on a circuit different from that to which the receiver is connected.
  - Consult the dealer or an experienced radio/TV technician for help.
- FCC Caution: To assure continued compliance, follow the attached installation instructions.
  Any changes or modifications not expressly approved by the party responsible for compliance could void the user's authority to operate this equipment.

4. Simplified Remote Controller

■ Names and Operations

Operation Section

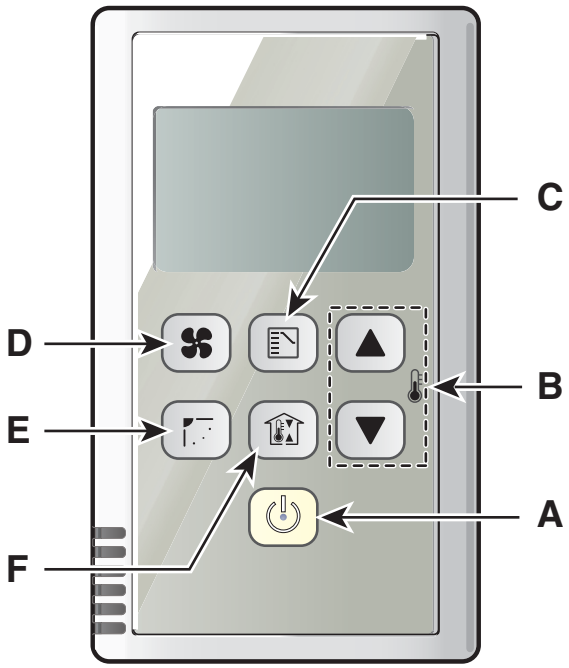

A. (Start/Stop)button
Pushing this button starts, and pushing again stops the unit.

B. / ( ) (Temperature setting) buttons
Changing the temperature setting.

C. (Mode Select) button
Pushing this button to select an operation mode. (AUTO /HEAT /DRY /COOL / FAN).

D. (Fan speed) button
Changing the fan speed.
(/ / /)

E. (Swing/Air direction) button*1
Use this button to set the auto swing or air direction to a specific angle.

*1 Do not move the flap (vertical airflow adjustment board) with your hand.
The flap is automatically directed down when the unit is stopped.
The flap is directed up during the HEAT standby.
The flap starts swinging after the HEAT standby is cancelled, although the AUTO flap indication on the remote control unit is displayed during the HEAT standby.

F. (Outing function) button
(Outing Function)

3

4. Simplified Remote Controller

Display Section

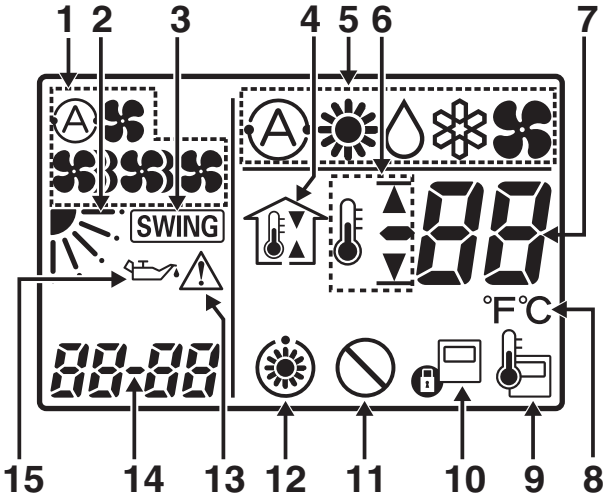

1. **(Fan mode select) indication**
   The selected fan mode is displayed.
2. **(Flap position) indication**
   Indicates the flap position.
3. **SWING (Swing) indication**
   Appears while the flap swings.
4. **(Outing) indication**
   (Outing Function)
   Appears when the outing function is set.
5. **Operation Mode indication**
   Displays the selected operation mode. (AUTO /HEAT /DRY /COOL / FAN).
6. **Upper and lower limit indication of the outing function**
   : Indicates the upper limit of the temperature.
   : Indicates the lower limit of the temperature.
7. **Temperature indication**
   Indicates the set temperature.
8. **°F / °C (Temperature unit) indication**
9. **(Remote control sensor) indication**
   Appears when the remote control sensor is used.
10. **(Centralized control) indication**
    Appears when operated in centralized control. If the remote control operation is not permitted to the remote unit, when the (Start/Stop) button, (Mode select) button, (Fan speed) button, (Swing/Air direction) button or / ( ) (Temperature setting) buttons are pressed, flashes and rejects the change.
11. **(Disabled feature) indication**
    Displayed if the selected feature was disabled during installation.
12. **(Heating standby mode) indication**
    appears when the fan of the indoor unit is stopped or in low fan speed.
13. **(Caution) indication**
    Appears when the protective device is activated or when an abnormality occurs.
14. **Alarm indication**
    This displays alarm messages when an error occurs.
15. **(Oil) indication**
    Appears when the engine oil needs to be changed. (Appears when the gas heat pump air conditioner is used.)

4. Simplified Remote Controller

■ Outing Function

Outing function is a function that prevents the room temperature from increasing too much (or decreasing too much) when no one is in the room. An air conditioner works automatically if this function is set effective.

General Performance of the Outing Function

COOL / DRY

① The air conditioner starts operation when the room temperature increases up to –1°C of the upper limit.

② The air conditioner stops operation when the room temperature decreases up to –2°C of the upper limit.

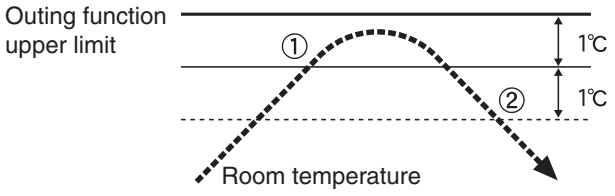

HEAT

① The air conditioner starts operation when the room temperature decreases up to +1°C of the lower limit.

② The air conditioner stops operation when the room temperature increases up to +2°C of the lower limit.

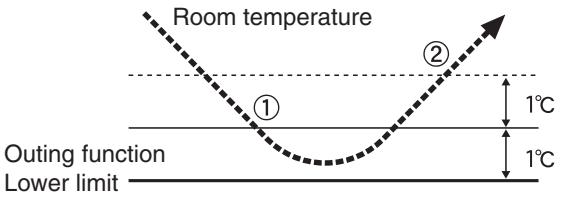

[Precautions]

- The outing control only starts/stops the air conditioner.
  It does not change the operation mode/temperature setting.
  Therefore, the operation mode/temperature needs to be set beforehand so that the outing function turns on the air conditioner with your desired operation mode/ temperature setting.
- If the room temperature rapidly changes, the room temperature may get over the upper or lower limit when the outing function is activated.
- The outing function is invalid during FAN/AUTO operation mode.
- The air conditioner's stop order (stated in ② /above) is valid only when the outing function is operated.
  If operated using other remote control units (or a centralized control device such as a system control), the outing function will not stop air conditioner operation.

• Setting the Outing Function

1. **Press and hold [⌂] for more than 4 seconds to display the upper limit temperature setting screen.**
   [⌂], [▲] and the upper limit temperature start flashing.
   (The default value of the upper limit temperature is 38 °C.)
2. **Press [▲] / [▼] to select the upper limit temperature, and press [⌂] to fix the value.**
   The lower limit temperature setting screen is displayed.
3. **Press [▲] / [▼] to select the lower limit temperature, and press [⌂] to fix the value.**
   The outing function setting is completed.
   (The default value of the lower limit temperature is 10 °C.)

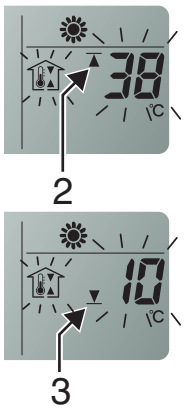

* The unit returns to the normal mode if [⌂] is pressed or there is no operation made for 3 minutes during the setting. In this case, all the settings in progress will be lost.

• Canceling the outing function

Press and hold [⌂] for more than 4 seconds while the outing function is set.

• Outing function indication

Outing function indication	Status
Off	The outing function is not set.
Flashing	The outing function is now being set, or under operation.
Lighting	Although the outing function is set, not under operation.

NOTE

If a blackout occurs during outing function operation and power is cut, the remote controller will lose the infomation for outing function operation. It reverts from the blackout, and an air conditioner does not drive in outing function when operation is started. At this time, an air conditioner does not stop at outing function.

4. Simplified Remote Controller

■ Basic Installation

Parts supplied with simplified remote controller

Simplified remote controller	Wood screws	Binding strap	Instruction manual	Installation manual
		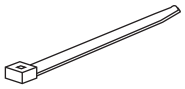	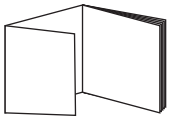	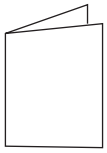

Simplified remote controller installation guidelines (Place of installation)

1. Mount the simplified remote controller at a height of 1 to 1.5 meters above the floor where it can sense the average temperature of the room.
2. Do not mount the simplified remote controller in a place exposed to direct sunlight or a place exposed to outside air such as near a window.
3. Do not mount the simplified remote controller behind an object so that it is separated from the air circulation of the room.
4. Mount the simplified remote controller within the room being air conditioned.
5. The simplified remote controller must be mounted on the wall or other surface vertically.

How to install the simplified remote controller

- **When used as embedded type**

1. Insert a screwdriver or the like in the groove on the lower side of the simplified remote controller body to pry off the back case. (See Fig. 3-44)
2. After passing the simplified remote controller wiring through the conduit on the back case of the controller, secure it with the two screws (field supply). (See Fig. 3-43)

   NOTE Do not apply excessive strain to the back case when securing it.
   Deformation of the back case may result in the remote controller falling off.
3. Connect the simplified remote controller wiring to the simplified remote controller main unit. (See “How to wire the simplified remote controller”.) When connecting the locally supplied 2 core lead wires to the terminal block, check the terminal numbers in the indoor unit to make sure that the wires are correctly connected. (See Fig. 3-45) (The simplified remote controller is damaged if 220 / 240 V AC is applied.)
4. Fit the simplified remote controller to the tabs of the back case and mount it.

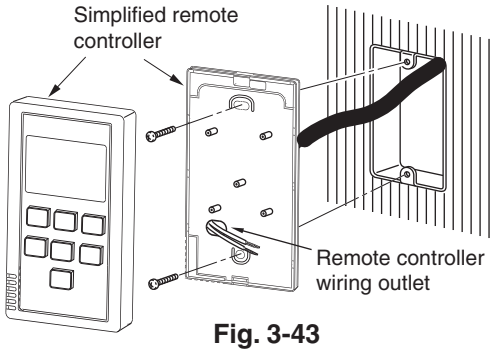

Fig. 3-43

When mounting the back case to the electric junction box, tighten the screws securely unitl the screw heads touch the back case. Otherwise, a loose screw head may damage the PCB on the back of the top cover when mounting the top cover. But do not over-tighten the screws. Overtightening may deform the back case and cause the unit to fall.

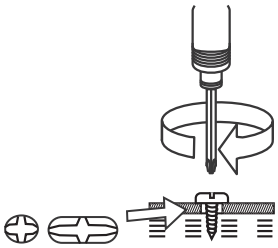

4. Simplified Remote Controller

- **When used as exposed type**

1. This step is the same as step 1 for the embedded type.
2. Because the simplified remote controller wiring exits the back case (thin part in upper central area), use a nipper or the like to cut out the part to fit the thickness of the simplified remote controller wiring. (See Fig. 3-46)
3. Referring to Fig. 3-47, connect the controller wiring to the main unit, and then attach the binding strap (supplied).
4. Place the controller wiring in the groove, and then adjust the wiring so that the binding strap attached in step 3 can be stored inside the simplified remote controller.
5. Secure the back case to the wall with the wood screws (supplied). (See Fig. 3-48)

   NOTE Do not apply excessive strain to the back case when securing it.
   Deformation of the back case may result in the remote controller falling off.

6. This step is the same as step 4 for the embedded type.

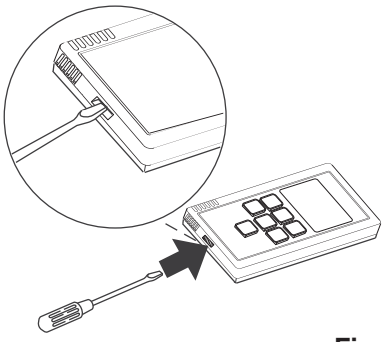

Fig. 3-44

- **Basic wiring diagram**

NOTE

Make sure to connect the wires correctly or the unit may be damaged. (See Fig. 3-49)

1. Following is a wiring diagram for controlling 1 indoor unit by 2 simplified remote controllers.
2. Performing group control of the multiple indoor units with 2 simplified remote controllers.
3. The main and the sub simplified remote controllers can be installed at any indoor unit for operations.

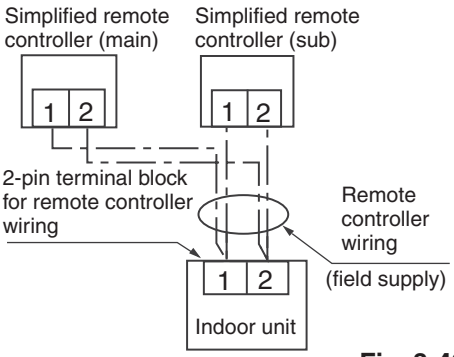

Fig. 3-49

● **How to wire the simplified remote controller**

- **Connection diagram**

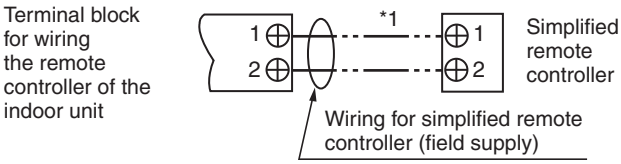

*1: Use 0.5 mm^2 to 1.25 mm^2 stranded wires.

Fig. 3-45

Remote controller wiring can be extended to a maximum of 500m.

NOTE

1. Do not twist the simplified remote controller wiring with the power wiring or run it in the same metal conduit, because this may cause malfunction.
2. Install the simplified remote controller away from sources of electrical noise.
3. Install a noise filter or take other appropriate action if electrical noise affects the power supply circuit of the unit.

- Use an electric junction box (field supply) (See Fig. 3-43) for flush mounting of the simplified remote controller

● **Guidelines for using 2 simplified remote controllers**

This multiple remote controller system controls 1 to 8 indoor units with 2 simplified remote controllers.

- **Set-up procedure**

1. One of the 2 simplified remote controllers should be set as main controller.
2. For the rest, see the “Remote controller setting mode” section and set up Sub.

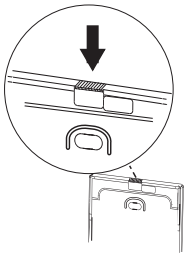

Fig. 3-46

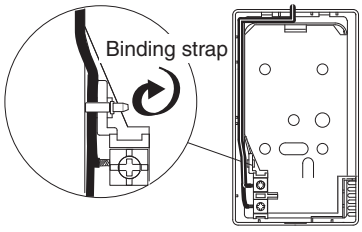

Fig. 3-47

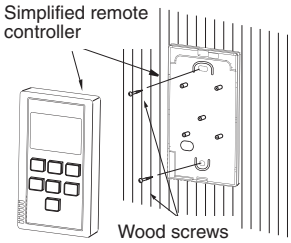

Fig. 3-48

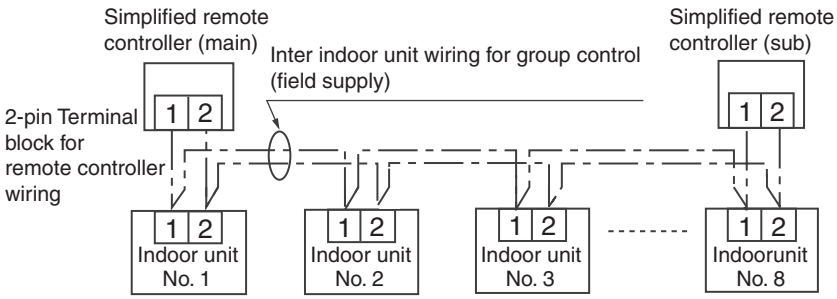

Fig. 3-50

4. Simplified Remote Controller

● **Remote controller setting mode**

Use the following method to perform simplified remote controller Main/Sub setting and RCU.CK switching.

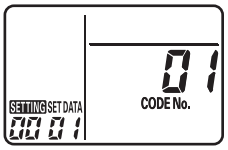

1. Press both [ ] and [ ] buttons on the remote controller for more than 4 seconds together.
2. Use [▲]/[▼] ( ) button to select an item code, and then use [ ] button to confirm.
3. Change DATA with [▲]/[▼] ( ) buttons.
4. Press [ ]. Finally, press [ ].

* To go back one step, press [ ].
* DATA is memorized in the RCU.
(DATA setting will not be changed even when the power is turned off.)
* Make sure to set [Normal] for RCU. CK.

CODE ITEM	ITEM	DATA	
		0000	0001
01	RCU. Main/Sub	Sub	Main
08	RCU. CK	RCU. CK	Normal

● **Indoor unit setting mode**

Use the following method to switch sensor or temperature unit (Celsius/Fahrenheit).

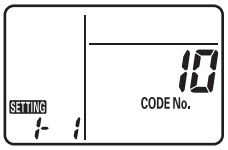

1. Press [ ] + [ ] + [ ] buttons on the remote controller for more than 4 seconds together.
2. Use [▲]/[▼] ( ) button to select a unit, and then use [ ] button to confirm.
3. Use [▲]/[▼] ( ) button to select an item code, and then use [ ] button to confirm.
4. Change DATA with [▲]/[▼] ( ) buttons.
5. Press [ ]. Finally, press [ ].

* To go back one step, press [ ].
* DATA is memorized in the indoor unit.
(DATA setting will not be changed even when the power is turned off.)

CODE	ITEM	DATA	
		0000	0001
32	Room temperature sensor	Main unit	RCU
33	Temperature unit	°C	°F

● **To display the sensor temperature:**

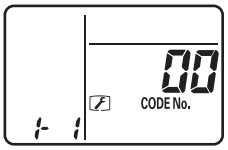

1. Press both [ ] and [ ] buttons on the remote controller for more than 4 seconds together.
2. Use [▲]/[▼] ( ) button to select a unit, and then use [ ] button to confirm.
3. Change the sensor address (CODE No.) with [▲]/[▼] ( ) buttons.
4. Press the [ ] button to finish service mode.

* To go back one step, press [ ].

● **To display the trouble history:**

1. Press both [ ] and [ ] buttons on the remote controller for more than 4 seconds together.
2. Change the alarm message: [▲]/[▼] ( ) buttons
3. Press the [ ] button to finish service mode.

* To clear the trouble history, press [ ].

CODE No. 01 → 04
(New) (Old)

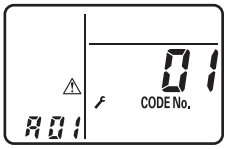

3

4. Simplified Remote Controller

● Test run setting

1. Press both ⏻ and ⊡ buttons on the remote controller for more than 4 seconds together, and then press ⏻ (ON/OFF) button.
   - "TEST" will appear on the crystal display during test run.
   - During test run, temperature cannot be adjusted. This button should be used only for test run.
2. Perform test run in any operation mode of "heat", "cool" or "fan".

   NOTE

   The outdoor unit does not operate for 3 minutes after stopping operation or turning on the unit.
3. After test run is finished, press both ⏻ and ⊡ buttons again for more than 4 seconds together, and then make sure "TEST" goes off from the display. (The 60-minute off timer function is provided for this remote controller in order to avoid continuous test run.)

● Caution

Caution when installing the remote controller (See Fig. 3-51-1)

*1 Install the remote controller more than 70 mm apart from the wall surface. (See Fig. 3-51-2)

*2 To install the remote controllers side-by-side, keep the space between each for more than 75 mm. (See Fig. 3-51-2)

*3 To install the remote controllers one above the other, keep the space between each for more than 25 mm. (See Fig. 3-51-3)

Unit: mm

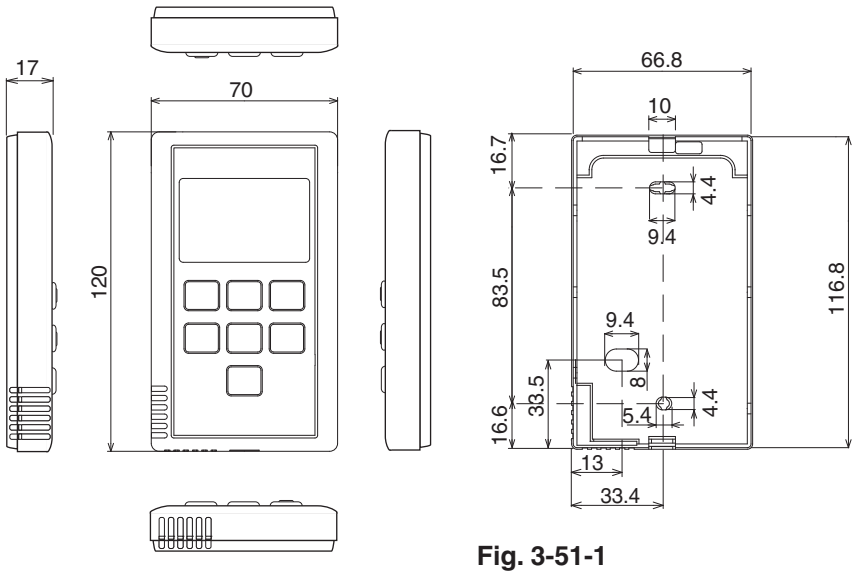

Fig. 3-51-1

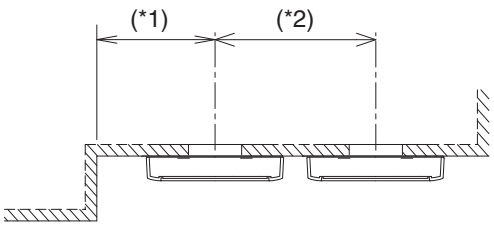

Fig. 3-51-2

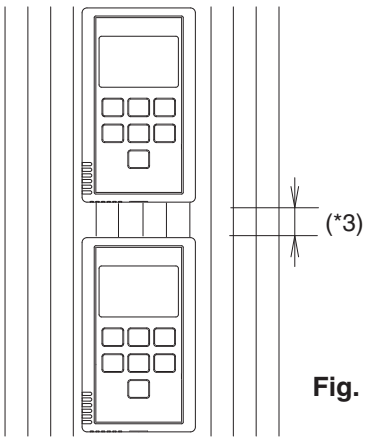

Fig. 3-51-3

4. Simplified Remote Controller

Simplified Remote Controller / CZ-RELC2

■ Important Safety Instructions

Before using the system, be sure to read these “IMPORTANT SAFETY INSTRUCTIONS”.
After reading this manual, save it in a convenient place.

⚠ Warning

Installation Precautions

- Do not install by yourself.
  Installation should always be performed by your dealer or a professional service provider. Electric shock or fire may result if an inexperienced person performs any installation or wiring procedures incorrectly.
- Use only specified air conditioners.
  Always use only air conditions specified by the dealer.

Moving and Repair Precautions

- Do not repair.
  Never repair the system by yourself.
- Contact your dealer before moving the system.
  Contact your dealer or a professional service provider about moving and reinstalling the system.
  Electric shock or fire may result if an inexperienced person performs any installation procedures incorrectly.

Precautions for Use

- Do not touch switches with wet hands.
  Electric shock and damage to the system can result.
- Protect the remote controller from water.
  Damage to the system can result.
- Stop the system and turn the power off if you sense unusual smells or other irregularities.
  Continuing operation when the system is out of order can result in electric shock, fire, and damage to the system. Contact your dealer.

Note:

- This device complies with Part 15 of the FCC Rules. Operation is subject to the following two conditions: (1) This device may not cause harmful interference, and (2) this device must accept any interference received, including interference that may cause undesired operation.
- This equipment has been tested and found to comply with the limits for a Class B digital device, pursuant to part 15 of the FCC Rules. These limits are designed to provide reasonable protection against harmful interference in a residential installation.
  This equipment generates, uses and can radiate radio frequency energy and, if not installed and used in accordance with the instructions, may cause harmful interference to radio communications. However, there is no guarantee that interference will not occur in a particular installation. If this equipment does cause harmful interference to radio or television reception, which can be determined by turning the equipment off and on, the user is encouraged to try to correct the interference by one or more of the following measures:
  - Reorient or relocate the receiving antenna.
  - Increase the separation between the equipment and receiver.
  - Connect the equipment into an outlet on a circuit different from that to which the receiver is connected.
  - Consult the dealer or an experienced radio/TV technician for help.
- FCC Caution: To assure continued compliance, follow the attached installation instructions. Any changes or modifications not expressly approved by the party responsible for compliance could void the user’s authority to operate this equipment.

4. Simplified Remote Controller

■ Names and Operations

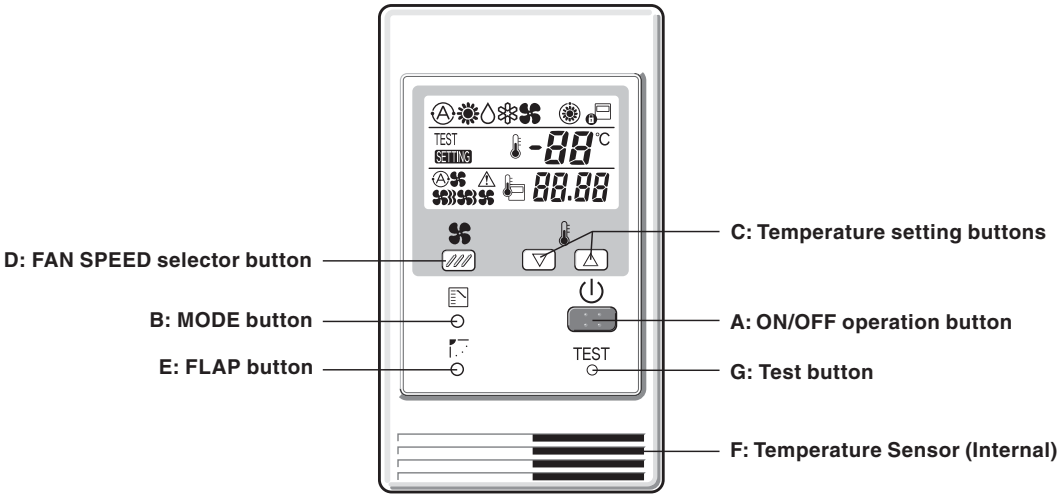

Operation Section

A: ON/OFF operation button	This button is for turning the air conditioner on and off.
B: MODE button	Use this button to select one of the following five operating modes.
(AUTO)	: Used to automatically set cooling or heating operation. (temperature range: 17 ~ 27 °C)
(HEAT)	: Used for normal heating operation. (temperature range: 16 ~ 26 °C)
(DRY)	: Used for dehumidifying without changing the room temperature. (temperature range: 18 ~ 30 °C)
(COOL)	: Used for normal cooling operation. (temperature range: 18 ~ 30 °C)
(FAN)	: Used to run the fan only, without heating or cooling operation.

3

4. Simplified Remote Controller

C: Temperature setting buttons	△ : Press this button to increase the temperature setting. ▽ : Press this button to decrease the temperature setting.
D: FAN SPEED selector button	
(AUTO)	Ⓐ : The air conditioner automatically decides the fan speed.
(HI.)	: High fan speed
(MED.)	: Medium fan speed
(LO.)	: Low fan speed
E: FLAP button	1. Use this button to set the airflow direction to a specific angle. • In the cool mode and dry mode, if the flaps are set in a downward position, condensation may form and drip around the vent. • Do not move the flap with your hands.
F: Temperature sensor (Internal)	Although the temperature sensor in the indoor unit normally detects the temperature, this internal sensor can detect the temperature around the remote controller. For more information, contact the dealer where you made the purchase. (Do not make any settings if group control is being used.)
G: TEST button CAUTION	This button is used only when servicing the air conditioner. **Do not use the TEST button for normal operation.**

NOTE When any button is pressed, the backlight of the LCD display lights up for 30 seconds.

* Group control means that maximum up to 8 indoor units can be concurrently controlled with a remote controller.

4. Simplified Remote Controller

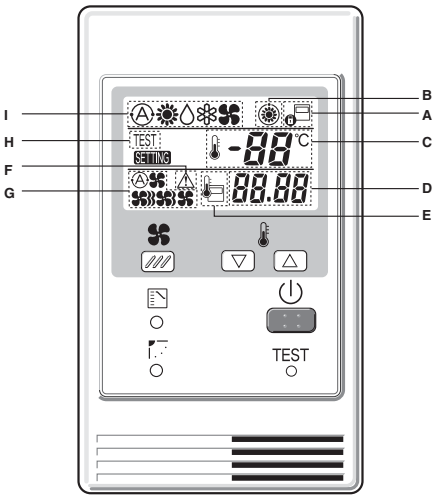

Display Section

A: This is displayed to indicate that the system controller is being used for control.
When indicator is flashing on the display, the operation is not accepted by the system controller.

B: When the unit is in the heating standby mode, the indicator appears.

C: This displays the temperature setting.

D: This displays alarm messages when an error occurs.

E: This is displayed when using the temperature sensor in the remote controller.

F: This is displayed only if an abnormality occurs within a unit.

G: The currently selected FAN SPEED is displayed.

H: When the TEST button is pressed, the TEST indicator appears.

I: The currently selected operation mode is displayed.

■ Basic Installation

● Parts supplied with simplified remote controller

No.	Supplied parts	Qty
1	Simplified remote controller (comes with 200 mm wire)	1
2	Machine screws M4 × 25	2
3	Wood screws	2

No.	Supplied parts	Qty
4	Spacers	2
5	Wire joints	2
6	Operating Instructions	1

● Simplified remote controller installation guidelines

Place of installation

- Mount the simplified remote controller at a height of 1 to 1.5 meters above the floor where it can sense the average temperature of the room.
- Do not mount the simplified remote controller in a place exposed to direct sunlight or a place exposed to outside air such as near a window.
- Do not mount the simplified remote controller behind an object so that it is separated from the air circulation of the room.
- Mount the simplified remote controller within the room being air conditioned.
- The simplified remote controller must be mounted on the wall or other surface vertically.

SWITCHING THE ROOM TEMPERATURE SENSOR

The room temperature sensor is placed both in the indoor unit and the simplified remote controller respectively. Either sensor can be used to sense the room temperature.
The indoor unit sensor is usually used.
If you use the simplified remote controller to sense the room temperature, switch the remote controller sensor switch (RCU. SNS) on the PCB of the simplified remote controller from OFF to ON. See the diagram below.

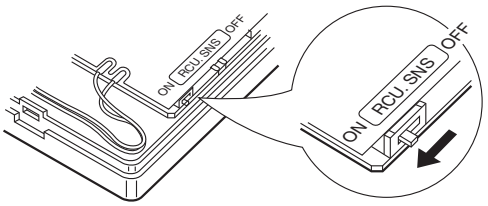

(Fig. 3-52)

4. Simplified Remote Controller

● How to install the simplified remote controller

< NOTE 1 > Do not twist the simplified remote controller wiring with the power wiring or run it in the same metal conduit, because this may cause malfunction.

< NOTE 2 > Install the simplified remote controller away from sources of electrical noise.

< NOTE 3 > Install a noise filter or take other appropriate action if electrical noise affects the power supply circuit of the unit.

- Use an electric junction box (supplied locally) (See Fig. 3-53) for flush mounting of the simplified remote controller.

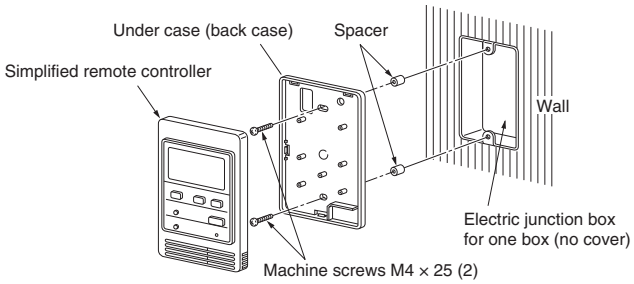

When mounting the back case, tighten the screws securely until the screw heads touch the back case. Otherwise, a loose screw head may damage the PCB on the back of the top cover when mounting the top cover. But do not over-tighten the screws. Overtightening may deform the back case and cause the unit to fall.

(Fig. 3-53)

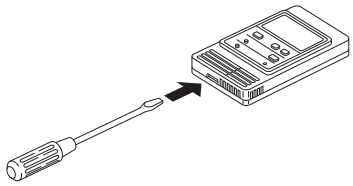

(Fig. 3-54)

1. Insert a screwdriver or the like in the groove on the lower side of the simplified remote controller body to pry of the back case. (See Fig. 3-54)
2. Use the 2 supplied M4 machine screws to secure the simplified remote controller back case. Prior to mounting, clear the cutouts in the back case corresponding to the holes in the wall box using a screwdriver or the like. Use the spacers and take care not to tighten the screws excessively. If the back case will not seat well, cut the spacers to a suitable thickness.
3. Connect locally supplied 2 core lead wires to the lead wires from the simplified remote controller. (See “How to wire the simplified remote controller.”)
   When connecting the locally supplied 2 core lead wires to the terminal block, check the terminal numbers in the indoor unit to make sure that the wires are correctly connected. (See Fig. 3-55)
   (The simplified remote controller is damaged if 220 / 240 V AC is applied.)
4. Fit the simplified remote controller to the tabs of the back case and mount it.

● How to wire the simplified remote controller

- **Connection diagram**

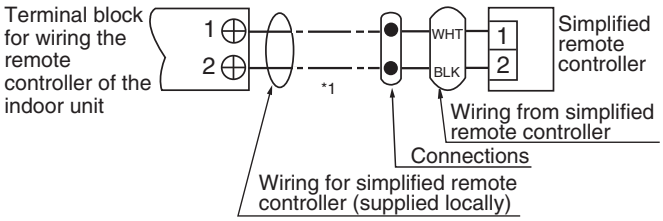

*1: Use 0.5 mm² to 1.25 mm² stranded wires.
Remote controller wiring can be extended to a maximum of 400 m.

(Fig. 3-55)

- **How to connect lead wires**

2 supplied white wire joints	Lead wire from indoor unit Lead wire from simplified remote controller Wire joint	1. Peel off 14 mm of the cable sheathing. 2. Twist the 2 wires together and crimp them together with the wire joint. 3. When a crimping tool is not used, solder the wires together and cover the joint with insulating tape.

- Multiple simplified remote controllers can not be mounted. Use the simplified remote controller with the remote controller address switch in the OFF position.

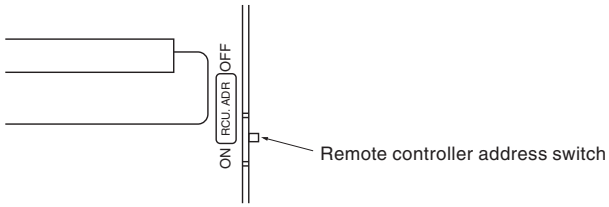

(Fig. 3-56)

● Remote controller test run setting

1 Push the tip of a ball-pointed pen, etc. into the hole marked “TEST” for more than 4 seconds and press the ⏻ (ON/OFF) button.

- “TEST” will appear on the crystal display during test run.
- During test run, temperature cannot be adjusted. This button should be used only for test run.

2 Perform test run in any operation mode of “heat,” “cool” or “fan.”

Note: The outdoor unit does not operate for 3 minutes after stopping operation or turning on the unit.

3 After finishing the test run, push the tip of a ball-point pen, etc. into the hole marked “TEST” again until “TEST” disappears from the crystal display.
(The 60-minute off timer function is provided for this remote controller in order to avoid continuous test run.)

5. System Controller

System Controller / CZ-64ESMC2

■ Functions of buttons

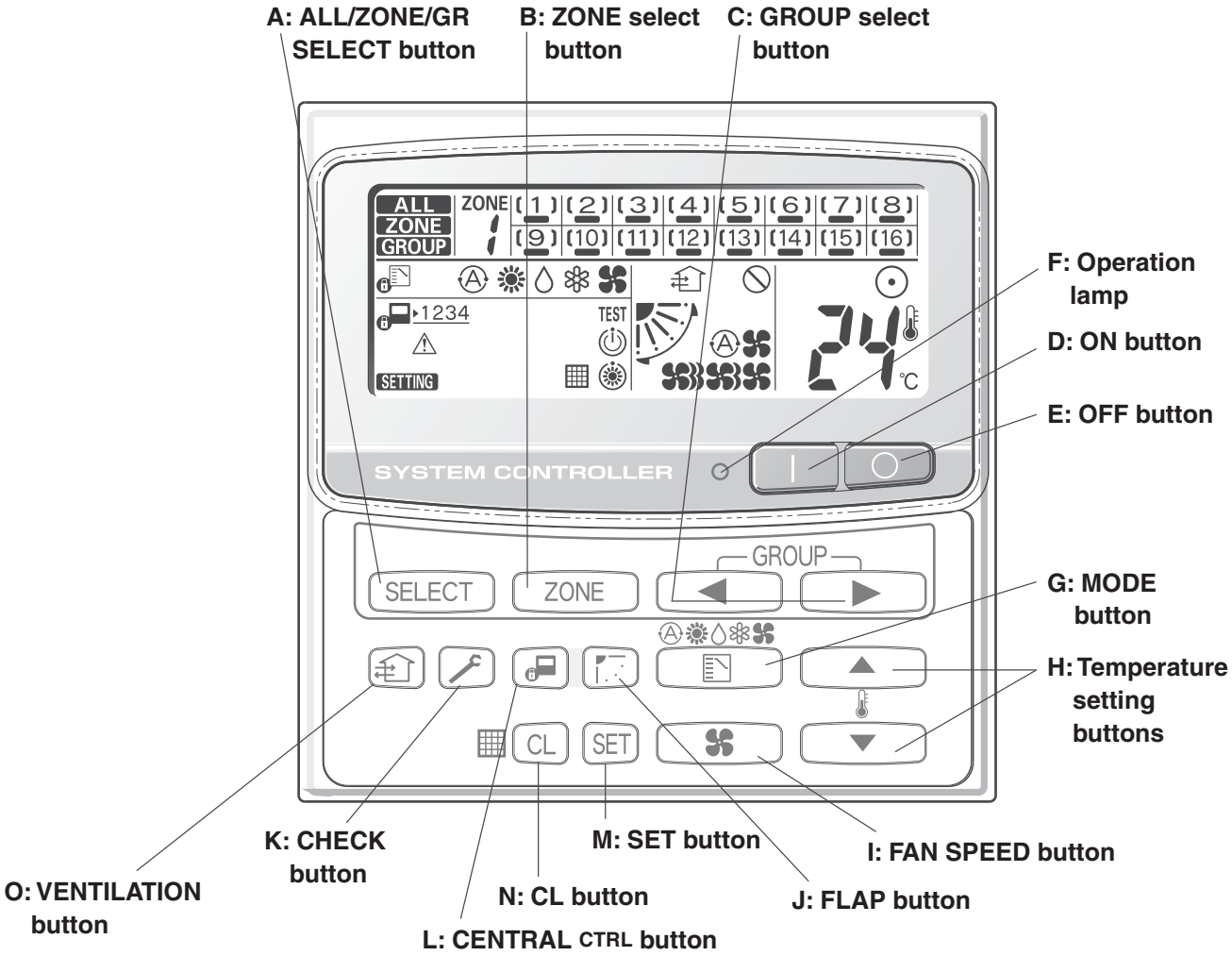

A: ALL/ZONE/GR SELECT button SELECT 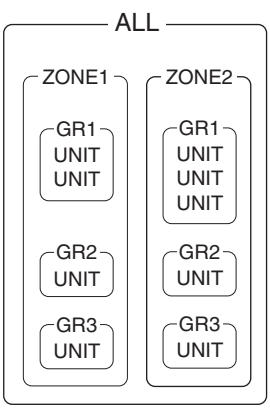 NOTE	Use this button to select one of the following: **ALL:** Used for turning all the air conditioners on and off. **ZONE:** Used for turning all the air conditioners of each zone on and off. **GROUP:** Used for turning all the air conditioners of each group on and off. **(GR)** **A maximum of four zones and 16 groups (units) in a zone can be set.**
B: ZONE select button ZONE	Use this button to select a zone (1 to 4) to operate individually.
C: GROUP select buttons ◀ ▶	Use these buttons to select a group (1 to 16) to operate individually.

Continued

5. System Controller

D: ON button	This button is for turning the selected air conditioner on.
E: OFF button	This button is for turning the selected air conditioner off.
F: Operation lamp	This lamp lights when the unit is turned on.
G: MODE button	Use this button to select one of the following five operations:
(AUTO)	Ⓐ: Used to automatically set cooling or heating operation. **Only for heat pump type** (Temperature range: 17 to 27°C)
(HEAT)	: Used for normal heating operation. **Only for heat pump type** (Temperature range: 16 to 26°C)
(DRY)	: Used for dehumidifying without changing the room temperature. (Temperature range: 18 to 30°C)
(COOL)	: Used for normal cooling operation. (Temperature range: 18 to 30°C)
(FAN)	: Used to run the fan only, without heating or cooling operation.
NOTE	When the indication is displayed, you cannot change the mode from and or to or and . To change the mode, turn off all units once then select the mode again.
H: Temperature setting buttons	: Press this button to increase the temperature setting. : Press this button to decrease the temperature setting.
I: FAN SPEED button	
(AUTO)	Ⓐ: The air conditioner automatically decides the fan speed.
(HI)	: High fan speed
(MED)	: Medium fan speed
(LO)	: Low fan speed
J: FLAP button ( )	1. Use this button to set the airflow direction to a specific angle. The airflow direction is displayed on the remote control unit. Operation mode — Number of airflow direction settings (COOL) or (DRY): 3 (HEAT) or (FAN): 5 Ⓐ (AUTO) Cooling mode: 3 Heating mode: 5
CAUTION	**In the cool mode and dry mode, when the flaps are set in a downward position, condensation may form and drip around the vent.** **Do not move the flap with your hands.**
NOTE	This function is available only for models U1 and T1.
( )	2. Use this button to make the airflow direction sweep up and down automatically. Press this button several times until the ( ) symbol appears on the display.
NOTE	This function is available only for models U1, K1 and T1.
NOTE	1) The flap setting can be performed only for units that have no remote controllers. 2) In the ALL or ZONE mode, no flap setting can be performed. If necessary, you should select the GROUP mode and use the FLAP button.

3

5. System Controller

K: CHECK button CAUTION	This button is used only when servicing the air conditioner. **Do not use the CHECK button for normal operation.**
L: CENTRAL CTRL button	Use this button to inhibit individual operation by remote controller as follows: 1234 1: Individual ON/OFF operation is inhibited. 2: Individual ON/OFF, MODE and Temperature setting operation is inhibited. 3: Individual MODE and Temperature setting operation is inhibited. 4: Individual MODE operation is inhibited. No indication: Central control is cleared. (Individual operation)
M: SET button NOTE	This button is used for setting indoor unit's address when installing the air conditioner. **Do not use the SET button for normal operation.**
N: CL button	Use this button to reset the filter sign. The air conditioner has the timer for the filter and informs you when the filter needs cleaning
O: VENTILATION button	Use this button when you installed a fan available in the market. Pressing this button turns on and off the fan. When turning off the air conditioner, the fan will also turned off. While the fan is operating, will appear in the display. * If " " is displayed when pressing the ventilation button, no fans are installed.

3

5. System Controller

■ Display

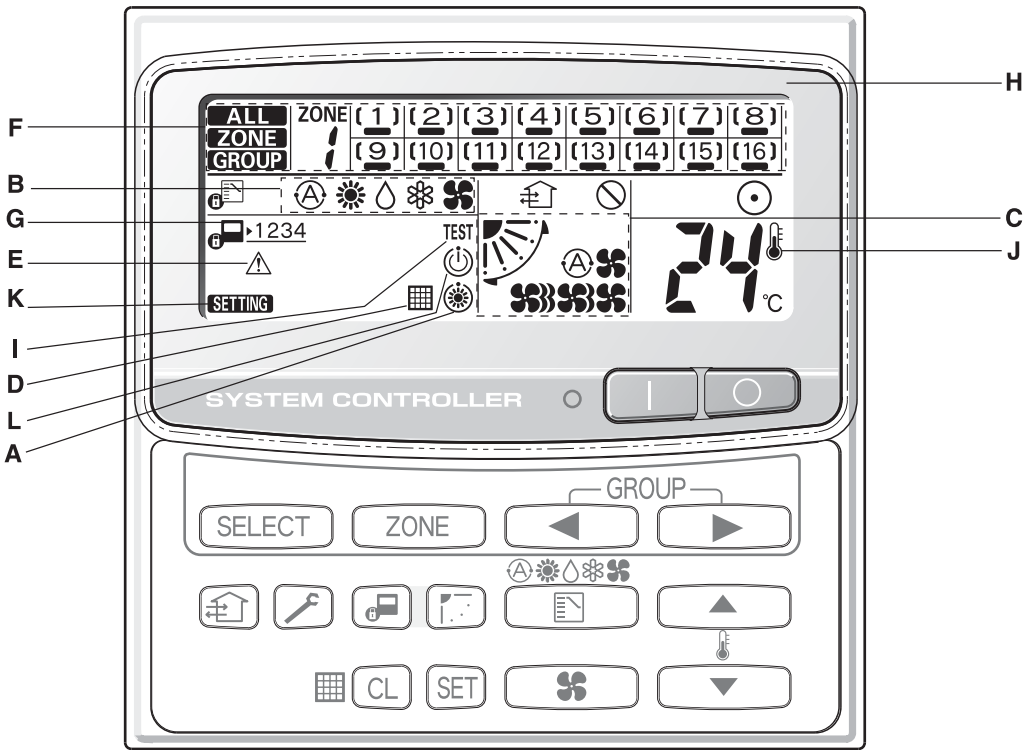

Description

A: When the unit is in heating standby mode, the ❄ indicator appears.

B: The currently selected operation mode is displayed.

C: The currently selected FAN SPEED, Airflow Direction and SWEEP settings are displayed.

D: This indication appears when the filter needs cleaning.

E: This indication appears only when an abnormality occurs within a unit.

F: The currently selected mode (ALL, ZONE or GROUP), ZONE number and GROUP number are displayed.

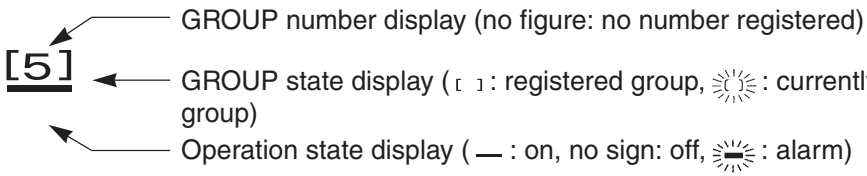

G: The currently selected central control mode (1, 2, 3 or 4) is displayed.

H: Lights when any of the air conditioners under the system control is operating; turns off when none of the air conditioners under the system control is operating. Blinks when any conditioner is operating under abnormal conditions and its protection function is working.

I: When the button is pressed for more than 4 seconds, the TEST indicator appears.

J: This indication appears when the temperature is set.

K: When turning on the power switch of the system controller, SETTING sign blinks for a few minutes. While blinking, any controls using the system controller are inhibited. This is because the system controller is verifying connected groups.

L: Appears during the peak cut mode (Demand) if an electric heat pump (EHP) air conditioner is used or during standby if a gas heat pump (GHP) air conditioner is used.

5. System Controller

■ How to Start Group Operation

To start group operation

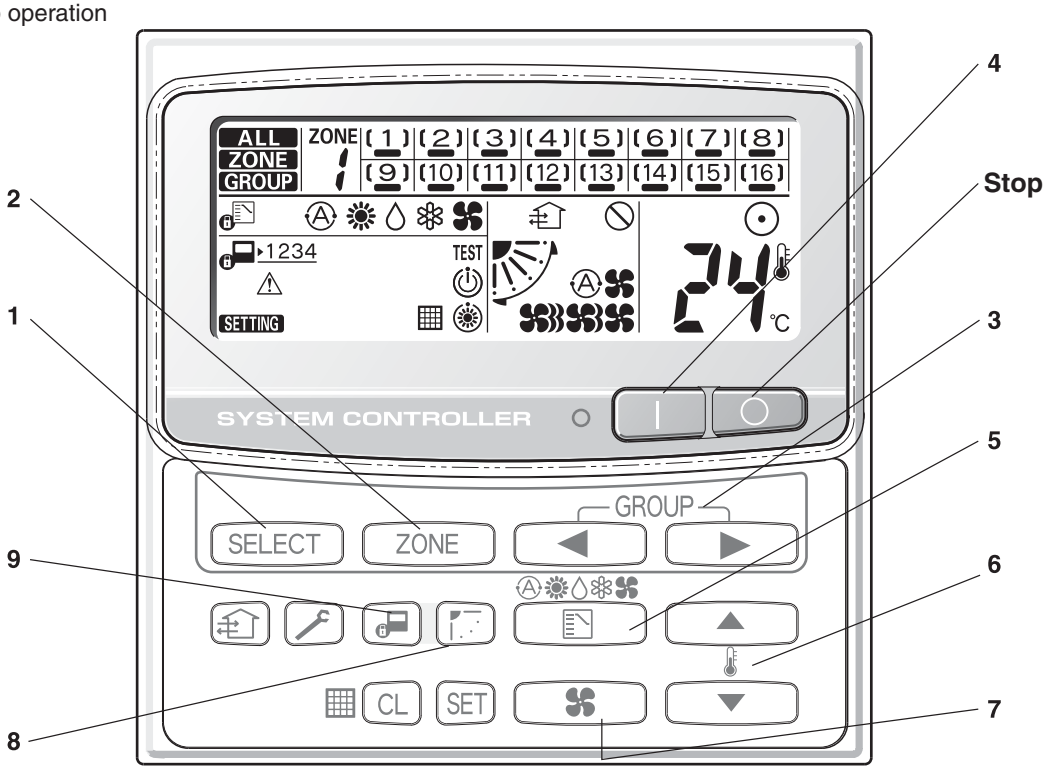

Power	Turn the power supply switch on more than 5 hours before starting operation.
1 SELECT	Press the SELECT button and select GROUP.
2 ZONE	Select the ZONE No. including the group to be operated by pressing ZONE button.
3 ◀ ▶	Select the GROUP No. to be operated by pressing GROUP select buttons ◀ ▶.
4 I	Press the ON button.
5	Set the operation mode by pressing the MODE button.
6 ▲ ▼	Set the desired temperature by pressing one of the temperature setting buttons ▲ ▼.
7	Set the desired fan speed by pressing the FAN SPEED button.
8	Set the airflow direction to a specific angle or sweep mode.
9	By pressing , select your desired setting. Individual → : Controls with the remote controller are possible. Central 1 → : Individual ON/OFF operation with the remote controller is inhibited. Central 2 → : Individual ON/OFF, MODE, and Temp. setting operations with the remote controller are inhibited. Central 3 → : Individual MODE and Temp. setting operations with the remote controller are inhibited. Central 4 → : Individual MODE operation with the remote controller is inhibited. ● Under Central/Individual settings other than listed above, “CENTRAL” is displayed.
Stop ○	Confirming the GROUP No. to be selected, press the OFF button.

NOTE
- The flap setting can be performed only for units that have no remote controllers.
- **AUTO Operation :** Depending on the difference between the temperature setting and the room temperature, heating and cooling alternate automatically so that a uniform room temperature is maintained.

3

5. System Controller

■ How to Start Collective Operation

To start collective operation (ALL or ZONE)

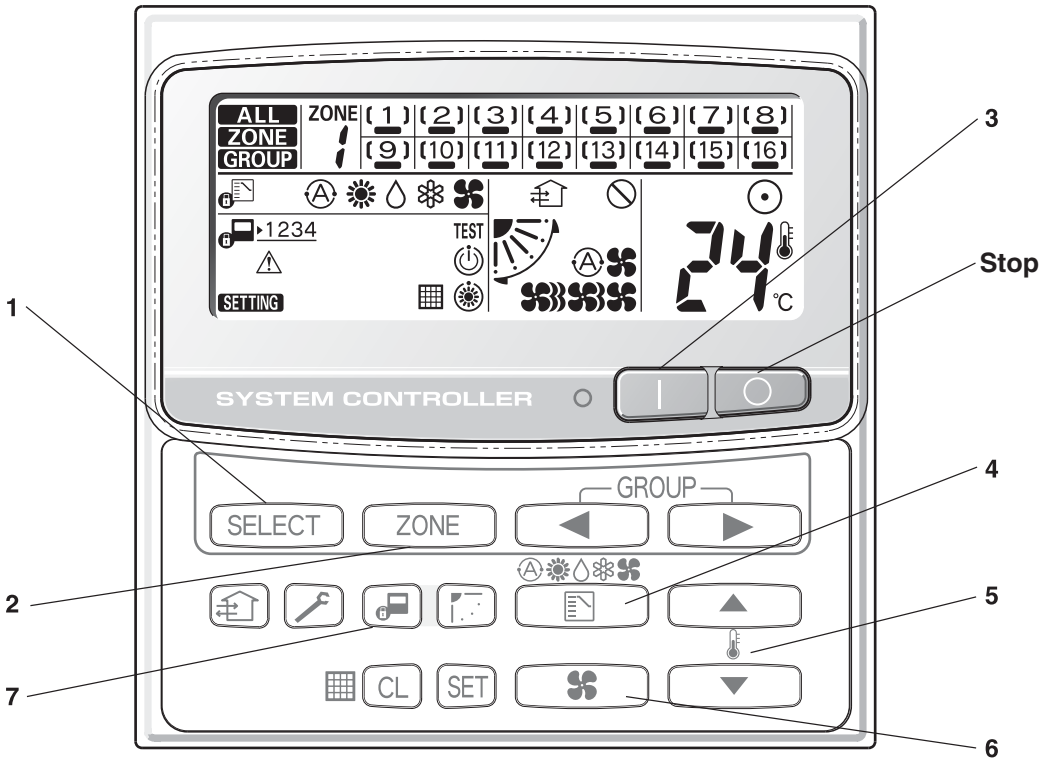

Power		Turn the power supply switch on 5 hours or more before starting operation.
1	SELECT	Press the SELECT button and select ALL or ZONE. In case of ZONE collective operation.
2	ZONE	Select the ZONE No. to be operated by pressing ZONE button.
3	I	Press the ON button.
4		Set the operation mode by pressing the MODE button.
5	▲ ▼	Set the desired temperature by pressing one of the temperature setting buttons ▲ ▼.
6		Set the desired fan speed by pressing the FAN SPEED button.
7		Select the control mode.
Stop	○	Confirming the ZONE No. to be selected or ALL indication, press the OFF button.

NOTE In the ALL or ZONE mode, no flap setting can be performed. If necessary, you should select the GROUP mode and use the FLAP button.

5. System Controller

■ How to Install the System Controller

Installation site selection

- Install the system controller at a height between 1 and 1.5 meters above the floor.
- Do not install the system controller in a place where it will be exposed to direct sunlight or near a window or other place where it will be exposed to the outside air.
- Be sure to install the system controller vertically, such as on a wall.

CAUTION

- **Do not twist the control wiring together with the power wiring or run it through the same metal conduit, because this may cause a malfunction.**
- **Install the system controller away from sources of electrical noise.**
- **Install a noise filter or take other appropriate action if electrical noise affects the power supply circuit of the unit.**

WARNING

Do not supply power to the unit or try to operate it until the tubing and wiring to the outdoor unit is completed.

Part Name	Figure	Q'ty	Remarks
System controller	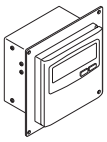	1	
Tapping screw	Truss-head Phillips 4 × 16 mm	4	For securing the system controller
Rawl plug		4	For securing the system controller
Manual		1	For installation
		1	For operation

3

5. System Controller

■ Overview of the System Controller

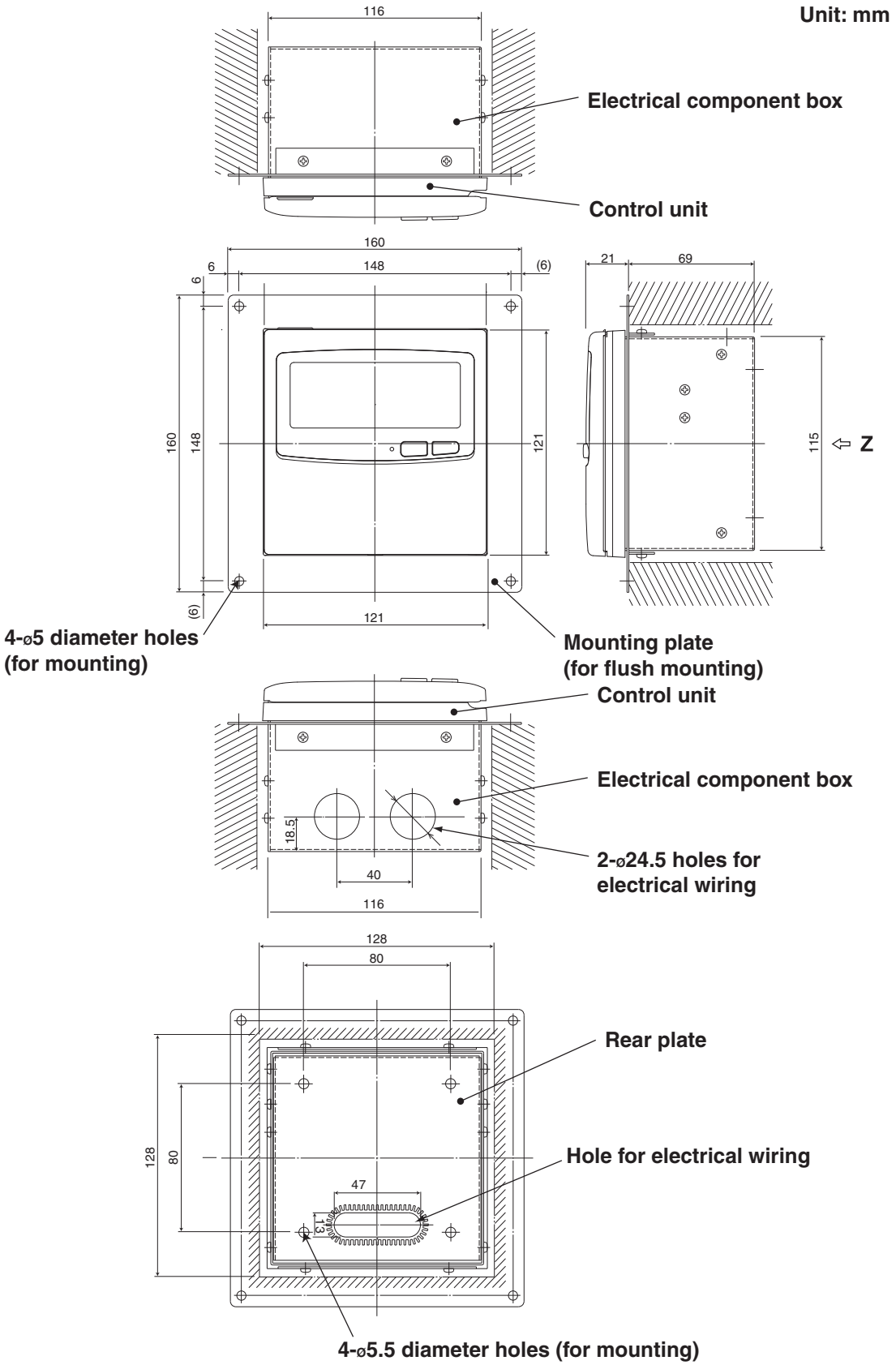

Z-view (back side)

* In order to mount the system controller flush with the wall, an opening measuring 128 mm × 128 mm is necessary.

Fig. 3-52

5. System Controller

■ Installation Procedure

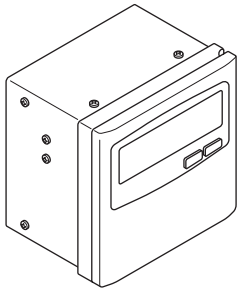

a): Normal mounting

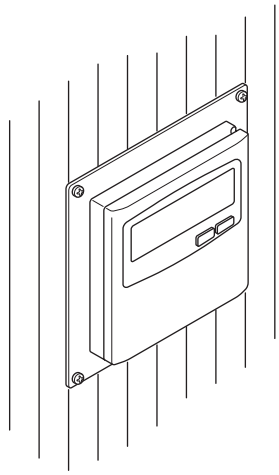

b): Flush mounting

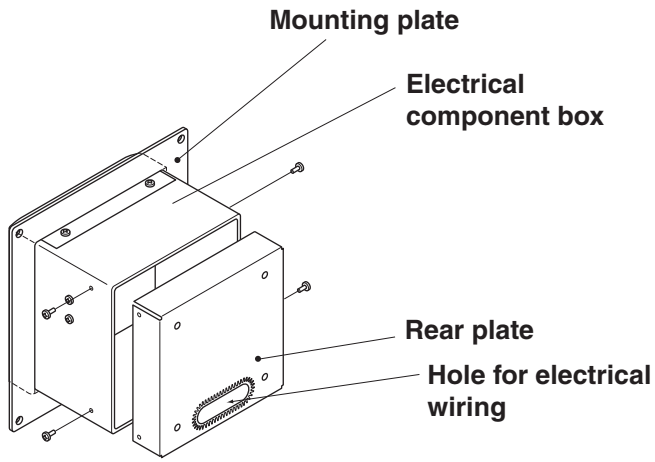

Fig. 3-53

1. Decide how the system controller will be mounted: in the normal manner or flush with the wall.
   a) To mount the system controller in the normal manner, remove the mounting plate. Then reattach the four screws to the electrical component box.
   b) To mount the system controller flush with the wall, make an opening in the wall measuring 128 mm x 128 mm. The opening must be at least 85 mm deep as measured from the outside surface of the wall.

2. Remove the rear plate and connect the electrical wiring.
   1) Remove the four screws located on both sides of the rear plate.
   2) Either the hole in the bottom of the electrical component box or the hole in the rear plate may be used to feed the electrical wiring.
   3) If the hole on top is used, the rear plate should be turned upside down.

3. Secure the system controller in place.
   a) If the system controller is being mounted in the normal manner, first attach the rear plate to the wall using the screws and Rawl plugs provided. Next, place the body of the system controller over the rear plate and secure it in place using four screws.
   b) If the system controller is being mounted flush with the wall, fit it through the mounting plate on the wall and secure it in place using the screws and Rawl plugs provided.

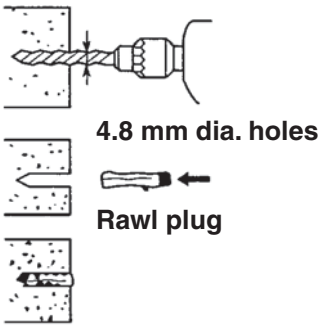

NOTE To mount the system controller on a wall made of cinder block, brick, concrete, or a similar material, drill 4.8 mm diameter holes in the wall and insert Rawl plugs to anchor the mounting screws.

3

5. System Controller

■ Layout of Electrical Terminals

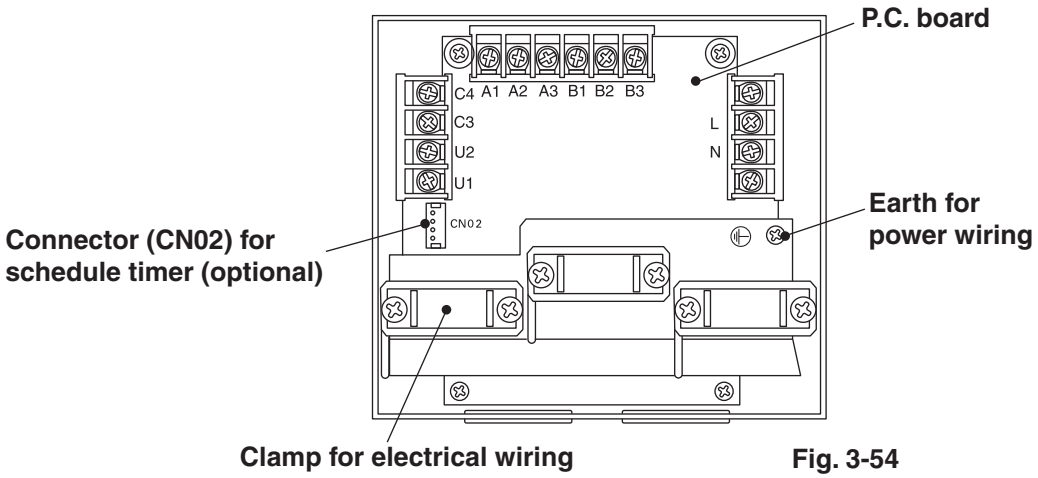

Fig. 3-54

How to connect electrical wiring

1) Basic wiring

N: L: Power supply (220 – 240 V ∿ 50 Hz/60 Hz)

U1: U2: Inter-unit control wiring. (Low voltage) (Use shielded wiring)

C3: Reserve

C4: Earth for inter-unit control wiring

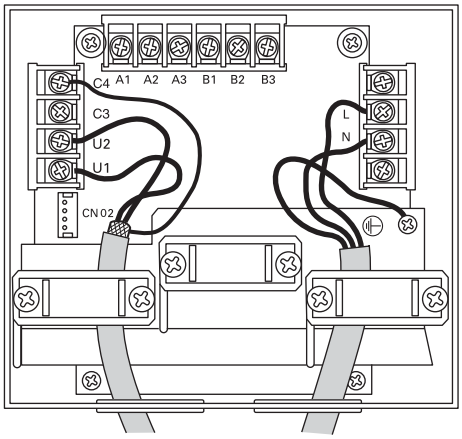

2) Terminals for remote monitoring

A1: Input for turning on air conditioners concurrently.

A2: Input for turning off air conditioners concurrently.

A3: Common input for turning air conditioners on or off.

B1: On operation state indicator output.

B2: Alarm indicator output.

B3: Common indicator output.

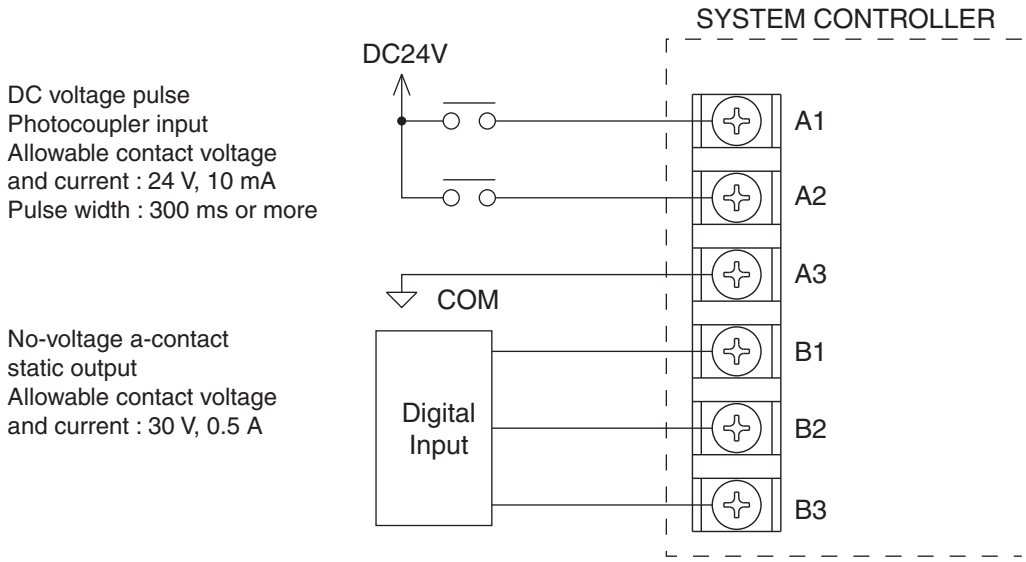

5. System Controller

■ Basic Wiring Diagram

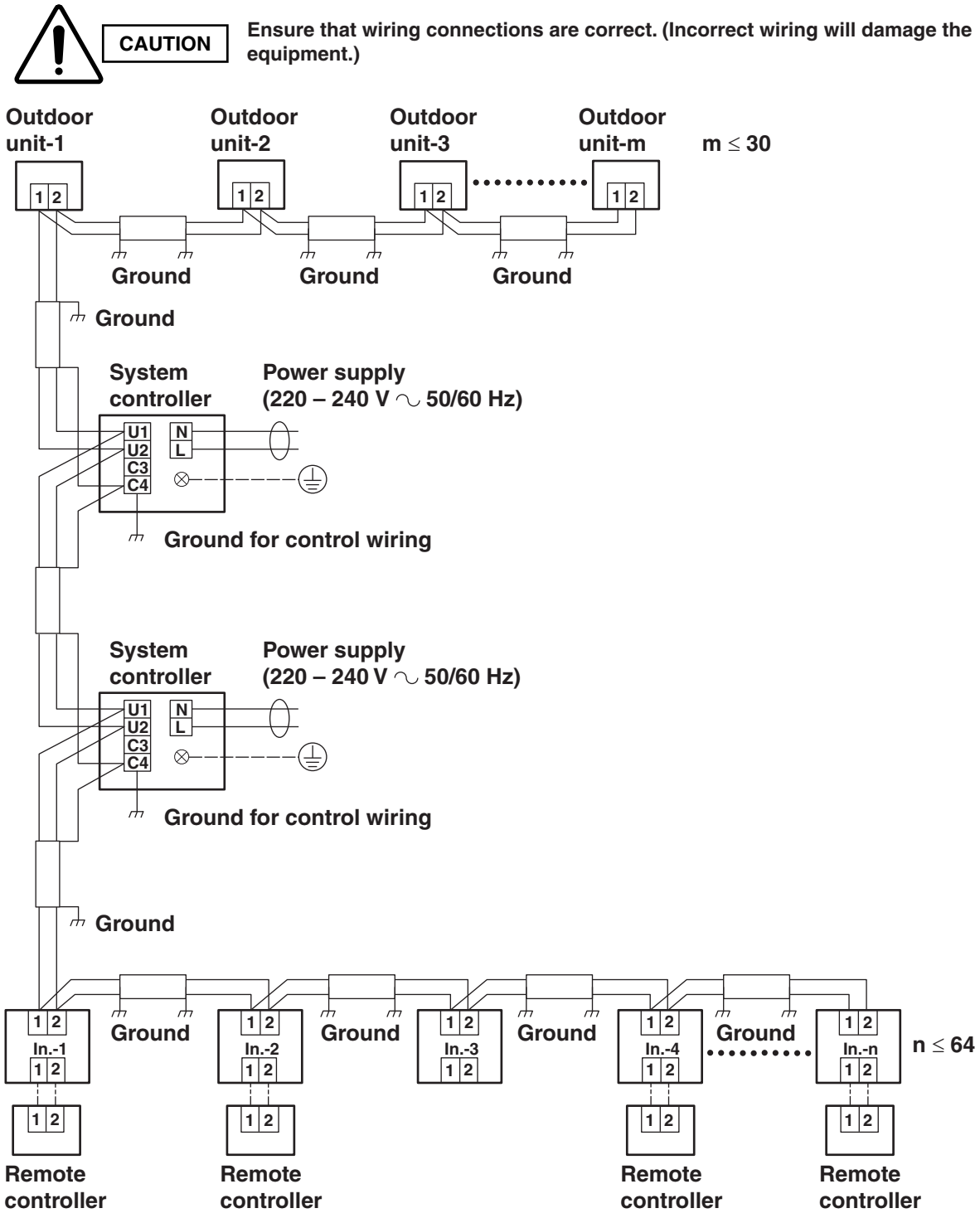

NOTE

1. The following figure is the inter-unit controll wiring.

   Use the shielded wiring.
2. In. means indoor unit.
3. Up to two system controllers may be connected to one control line system.

Fig. 3-55

5. System Controller

■ Address Switch Setting

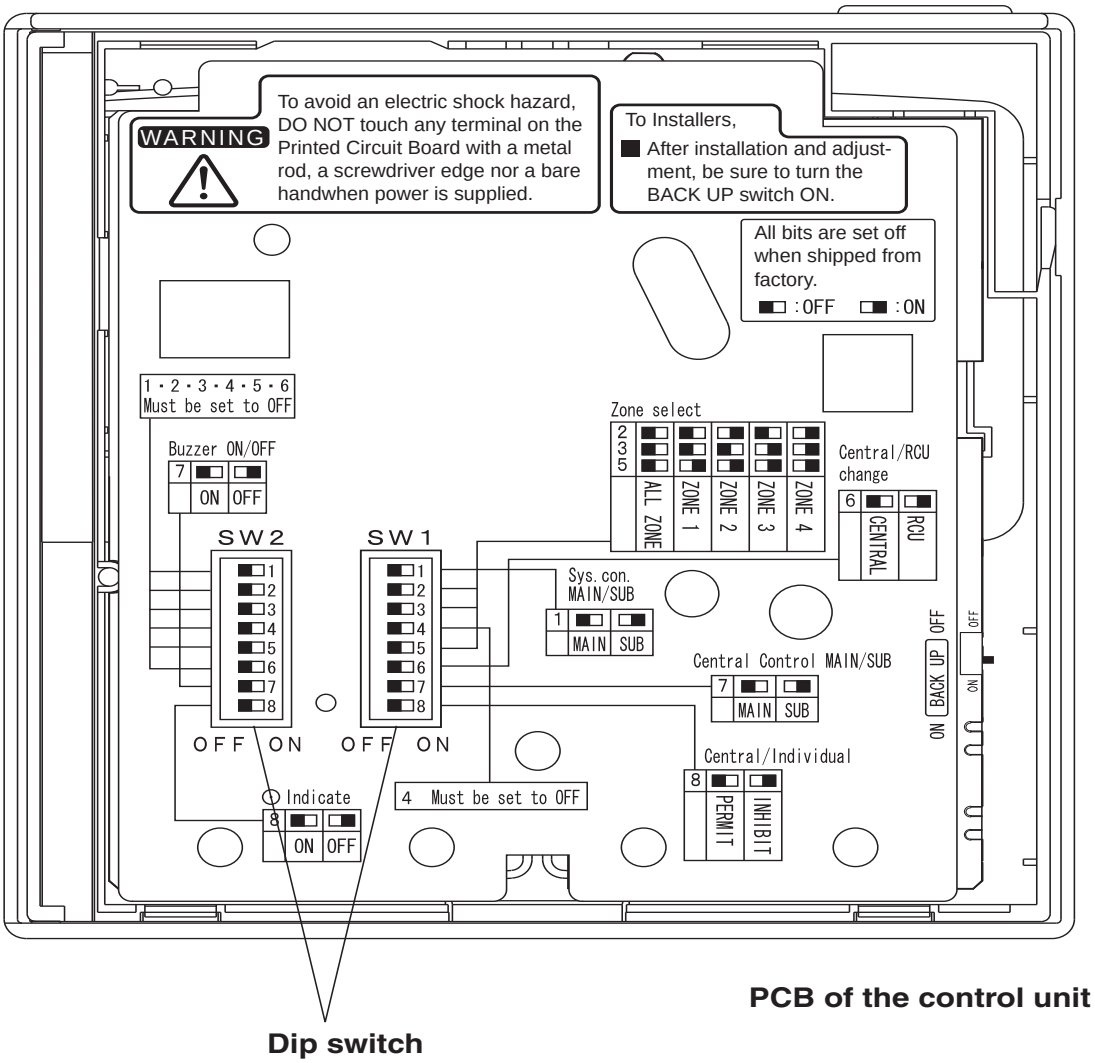

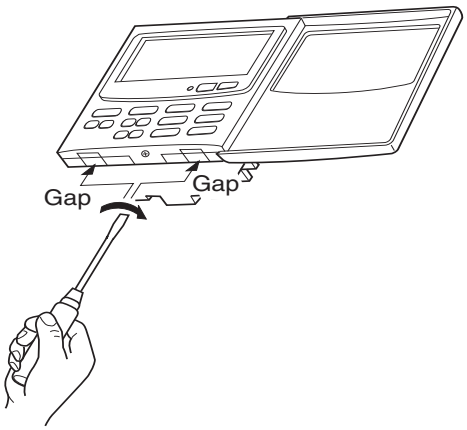

How to reach the P.C. board

Remove the flat-top screw on the bottom of the back case. When you open up the decorative cover, you will see two notches under the control unit. Inset a coin or other flat object into these notches and pry off the back case. The P.C. board on the back of the control unit is now visible.

5. System Controller

SW1

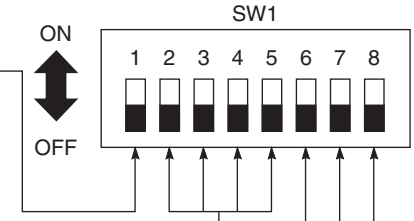

Main/sub selection switch
OFF: System controller operates as main controller.
ON: System controller operates as sub-controller.

ALL/ZONE mode selection switch
ALL mode:
All indoor units can be controlled by system controller ZONE 1, 2, 3, 4 mode:
Indoor units in one of zone 1, 2, 3, or 4 can be controlled by system controller. All indoor units cannot be set.

	2	3	4	5
ALL mode	OFF	OFF	OFF	OFF
ZONE 1 mode	OFF	OFF		ON
ZONE 2 mode	ON	OFF		ON
ZONE 3 mode	OFF	ON		ON
ZONE 4 mode	ON	ON		ON

Central control/Remote control mode selection switch.
OFF: Central control mode
Individual setting by remote controller can be inhibited by system controller.

ON: Remote control mode
Setting by system controller is inhibited by other central control equipments.

Central control Main/Sub selection switch
(OFF: Main, ON: Sub)
① When AMY adaptor etc. is used with system controller, set the switch to ON position.
② When only one system controller is used, set the switch to OFF position.
③ Except ①, when multiple system controllers are used, set only one system controller to OFF position others to ON position.
ALL mode system controller to be OFF position. (recommended)

(Central control) button operation switch
OFF: (Central control) button operation is permitted.
ON : button operation is inhibited.

*All switches are in OFF position at shipment.

Fig. 3-56

3

5. System Controller

SW2

Auxiliary switch
Must be set to OFF position.

Beep tone switch
OFF: Beep tone when each button is pushed.
ON: No tone when each button is pushed.

⦿ **Indication switch**
Normally set to OFF position.
When set to ON position, ⦿ indication is not displayed on LCD of system controller.

*All switches are OFF position at shipment.

Fig. 3-57

3

5. System Controller

■ Mode Setting

According to the function of each system controller, set SW1 as Fig. 3-58.

(1) Central control/Remote control mode

- Central control mode

  System controller is used as central control equipment.

  Individual setting by remote controller can be inhibited by system controller

- Remote control mode

  System controller is used as remote controller.

  Setting by system controller is inhibited by other central control equipments.

(2) ALL/ZONE mode

- **ALL mode**

  All indoor units can be controlled by system controller.

- **ZONE mode**

  Indoor units in one of ZONE 1, 2, 3 or 4 can be controlled by system controller

(3) Function of system controller is 10 types according to combination of central control/remote control mode and ALL/ZONE mode setting as the table 3-1.

(4) Stick the system controller unit label in a conspicuous position.

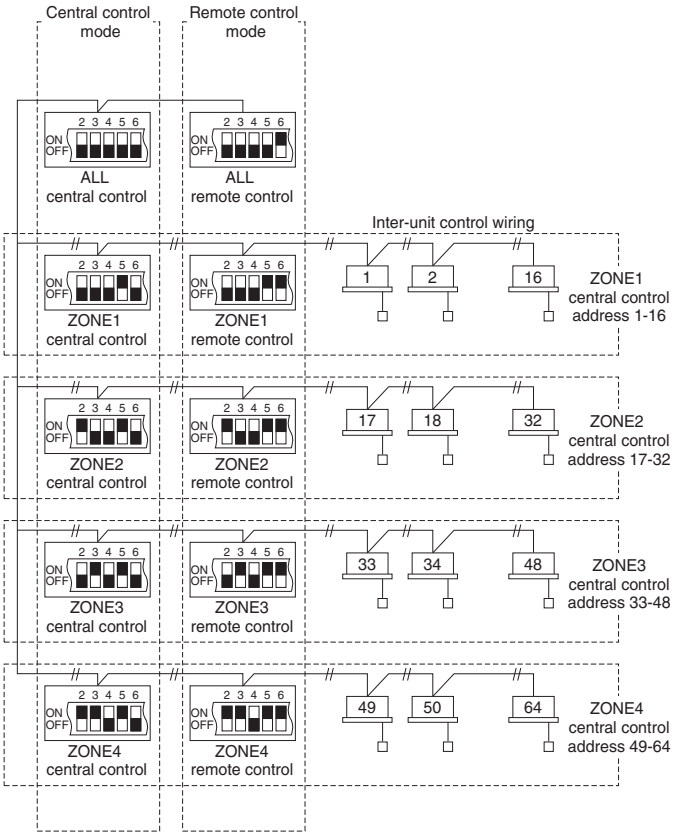

Fig. 3-58

Table 3-1

	Central control	Remote control
ALL	1. ALL/Central	6. ALL/Remote
ZONE1	2. ZONE1/Central	7. ZONE1/Remote
ZONE2	3. ZONE2/Central	8. ZONE2/Remote
ZONE3	4. ZONE3/Central	9. ZONE3/Remote
ZONE4	5. ZONE4/Central	10. ZONE4/Remote

3

5. System Controller

■ How to Perform Zone Registration

To operate the system controller properly, zone registration is required after finishing the test run (and after setting all indoor unit addresses) using one of the following methods.

(a) Zone registration using the remote controller (CZ-RTC2)
Refer to page 3-84

(b) Zone registration using the system controller (CZ-64ESMC2)
Refer to page 3-85

(c) Automatic zone registration using the system controller (CZ-64ESMC2)
Refer to page 3-85

For methods (a) and (b), you should make a zone registration table manually before performing the registration as shown on the page 3-83.

For method (c), zone registration is executed automatically, proceeding from small indoor unit addresses and small central addresses to larger numbers in numerical order. For example:

Central address	1	2	3	4	5	6	
ZONE-group	1-1	1-2	1-3	1-4	1-5	1-6	
Indoor unit address	1-1	1-2	2-1	2-2	2-3	3-1	

NOTE

1. An indoor unit address is assigned to each indoor unit during automatic address operation. Each indoor unit address combines an R.C. address and indoor unit number as follows:

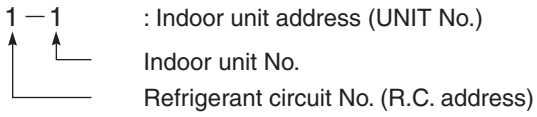

   This address is displayed on remote controller for UNIT No. when the UNIT button is pressed.

2. The central address represents the zone and group number. These addresses are assigned in ascending numerical order.

5. System Controller

■ ZONE Registration Table

ZONE	GROUP	Central address	Indoor unit address (UNIT No.)	Unit location		ZONE	GROUP	Central address	Indoor unit address (UNIT No.)	Unit location
1	1	1				3	1	33		
	2	2					2	34		
	3	3					3	35		
	4	4					4	36		
	5	5					5	37		
	6	6					6	38		
	7	7					7	39		
	8	8					8	40		
	9	9					9	41		
	10	10					10	42		
	11	11					11	43		
	12	12					12	44		
	13	13					13	45		
	14	14					14	46		
	15	15					15	47		
	16	16					16	48		
2	1	17				4	1	49		
	2	18					2	50		
	3	19					3	51		
	4	20					4	52		
	5	21					5	53		
	6	22					6	54		
	7	23					7	55		
	8	24					8	56		
	9	25					9	57		
	10	26					10	58		
	11	27					11	59		
	12	28					12	60		
	13	29					13	61		
	14	30					14	62		
	15	31					15	63		
	16	32					16	64		

NOTE

1. Assign indoor unit addresses to the desired positions (central addresses) manually.
2. For group control, only the main indoor unit should be assigned. Sub indoor units cannot be assigned.

5. System Controller

(a) Zone registration using the remote controller
(CZ-RTC2)
(Determination of central address)

- In this case, after confirming which indoor unit is connected to the remote controller and that the air conditioner in the OFF state, you set the central addresses one at a time.
- If the system has no remote controller, connect a remote controller to the system temporarily. Then follow this procedure.

NOTE

The indoor unit address must already have been set before performing zone registration. If necessary, refer to the Installation Manual supplied with the outdoor unit.

(1) Press the [🔧] and [⌂] buttons at the same time of the remote controller for more than 4 seconds.

(2) Do not press [UNIT] button.

(3) Once in this mode, the UNIT No., CODE No., No. of SET DATA and SETTING indications will flash on the display as shown Fig. 3-59.

NOTE

In case of group control "ALL" instead of "UNIT No." will flash on the display. Select the main indoor unit address by pressing the [UNIT] button once.

(4) Set CODE No. to 03 using the [▲] and [▼] (🌡) buttons.

NOTE

CODE No. 03 must be selected to perform zone registration using the remote controller.

(5) Set the Central address which you want to assign to the indoor unit address using the [▲] and [▼] (🕘) buttons according to the zone registration table.

(6) Press the [SET] button. The CODE No. and Central address changes from flashing to ON state. If you make a mistake, then press the [CAN CEL] button and reset the central address.

(7) Press the [🔧] button to finish zone registration.

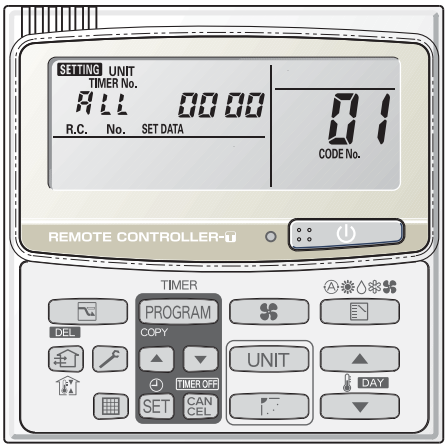

Fig. 3-59

For example, in this case
Indoor unit address: 1-8
Central address : 17 (ZONE 2, GROUP 1)

Fig. 3-60

5. System Controller

(b) Zone registration using the system controller (CZ-64ESMC2)

- In this case, you set all Central addresses by system controller at once manually.

(1) Press the [🔧] and [ZONE] buttons at the same time for more than 4 seconds.
SETTING and CODE No. C1 will flash.

(2) After confirming that CODE No. C1 is displayed, press the [SET] button. Once in this mode, a change takes place as shown in Fig. 3-65.

(3) Select the zone and group No. which you want to set with [ZONE] and [◀] [▶] (GROUP) buttons. If already set, press the [CL] button.

(4) Set the unit No. (Indoor unit address) with [📠] and [⊡] buttons, according to the zone registration table.
R.C. No. ..... [📠] button
Indoor unit No..... [⊡] button

(5) Press the [SET] button.
GROUP No. turns ON and UNIT No. (Indoor unit address) changes from flashing to ON state. UNIT No. is registered to selected ZONE No. and GROUP No.
If you make a mistake, then press the [CL] button and reselect the ZONE, GROUP and UNIT No.

(6) Register the other UNIT Nos. in the same way by following steps (3) to (5).

(7) Finally, complete the registration by pressing the [🔧] button.
SETTING flashes for a few minutes, then goes OFF.

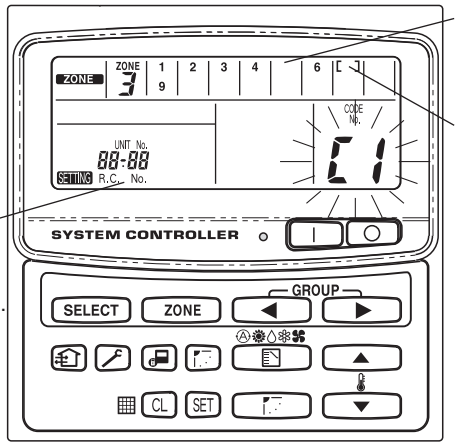

Fig. 3-61

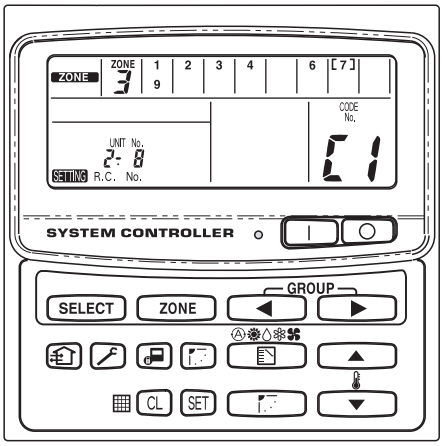

For example, in the case at left
Zone 3, group No. 7
Unit No. (indoor unit address) 2-8
Unit No. 2-8 is registered to zone 3-group 7.

Fig. 3-62

(c) Automatic zone registration using the system controller (CZ-64ESMC2)

(1) Press the [🔧] and [ZONE] buttons at the same time for more than 4 seconds.
SETTING and CODE No. C1 will flash.

(2) Select CODE. No. C2 by pressing [▲] and [▼] (🌡) button and press the [SET] button.
C2 changes from flashing to ON state and automatic zone registration will start.

(3) All registered GROUP No. will be disappeared all.

(4) Central address will be assigned from small indoor unit address to large one in numerical order automatically.
Finishing automatic zone registration, SETTING changes from flashing to OFF.

(5) If the error is happened, the "CHECK" starts flashing and zone registration finishes at this time. Press the [CL] button.

(6) Finally, complete automatic zone registration mode by pressing the [🔧] button.
SETTING flashes for a few minutes, then OFF.

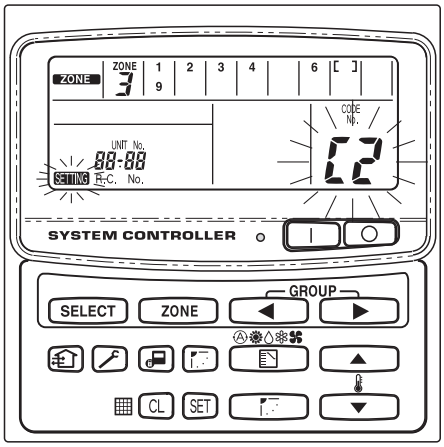

Fig. 3-63

3

5. System Controller

■ How to Check Overlapping of Central Address Nos.

(1) Press the [🔧] and [ZONE] buttons at the same time for more than 4 seconds.

SETTING and CODE No. C1 will flash.

(2) Select CODE. No. C3 by pressing [▲], [▼] ([🌡]) button and press the [SET] button.

C3 changes from flashing to ON state and SETTING will flash. Then auto overlap checking will start.

(3) If C3 changes from ON to flashing and SETTING stops flashing and disappears, there is no overlapping.

Then finally, complete the auto overlap checking mode by pressing the [🔧] button.

(4) If some of GROUP No., ZONE No. and UNIT No. flash, you should try again the zone registration.

① Select CODE No. C1 by pressing [▲], [▼] ([🌡]) button and press the [SET] button.

② Select the flashing GROUP No. with ZONE and GROUP button.

Then press the [CL] button and reselect the ZONE, GROUP and UNIT No.

③ Then finally, complete the auto overlap checking mode by pressing the [🔧] button.

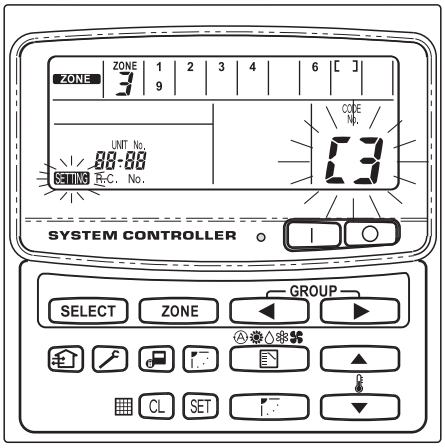

Fig. 3-64

3

■ Memory Back-Up Switch

Check the back-up switch is ON for back side of the system controller PCB.

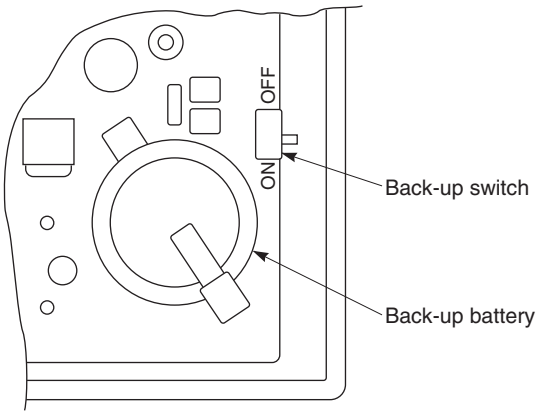

■ Test Run

(1) Power on for all indoor units. Next, power on for the system controller.

SETTING will flash, checking the indoor unit address automatically.

(2) If the group No. displayed on system controller is not same as indoor unit No.* which is connected, see Fig. 3-58 and do the setting again.

* In case of group control, main unit No. only.

5. System Controller

■ System Examples

The following diagrams show system examples and the correct setting of the switches on the PCB.

(1) For a system without link

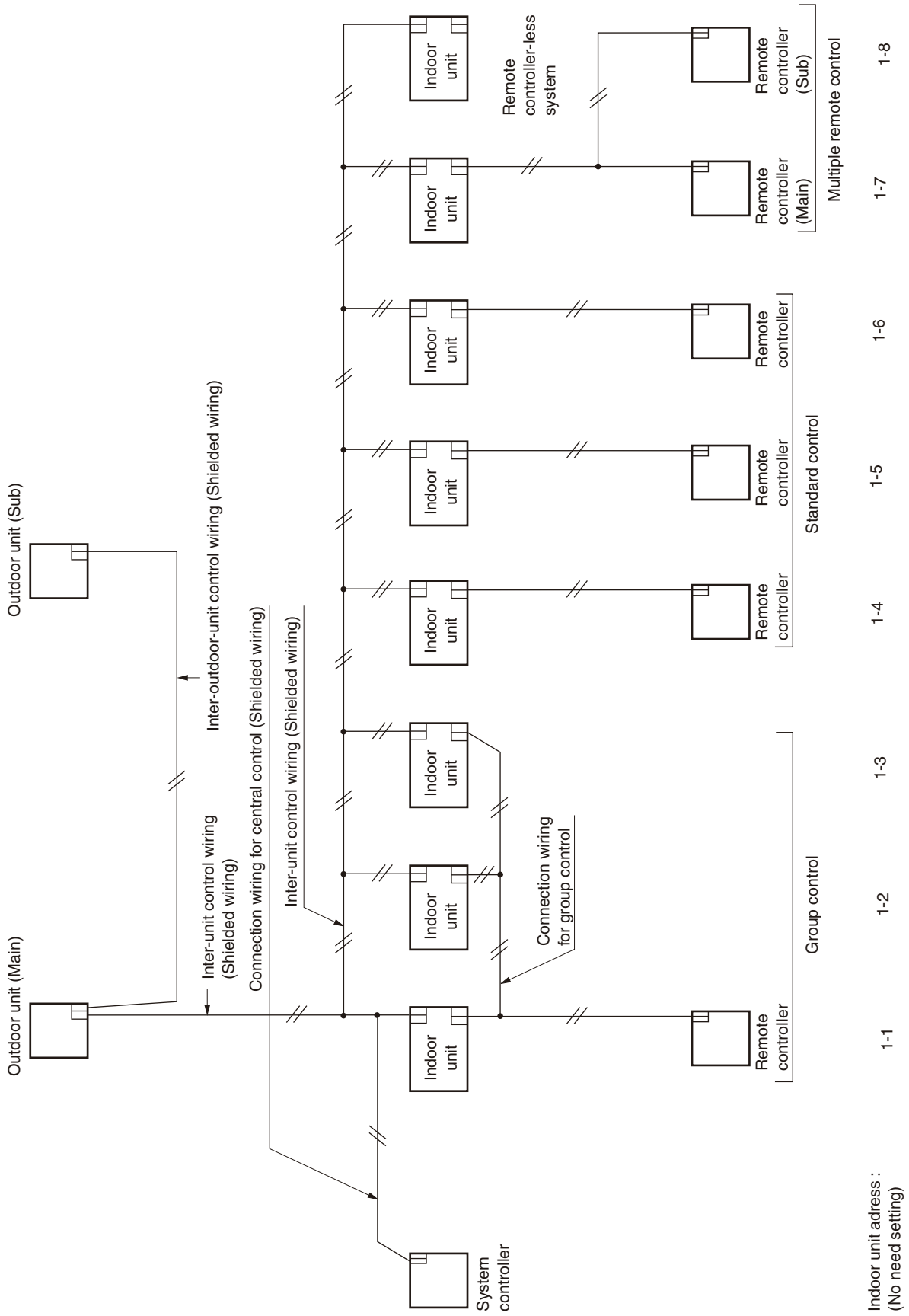

3

5. System Controller

(2) For a system with link

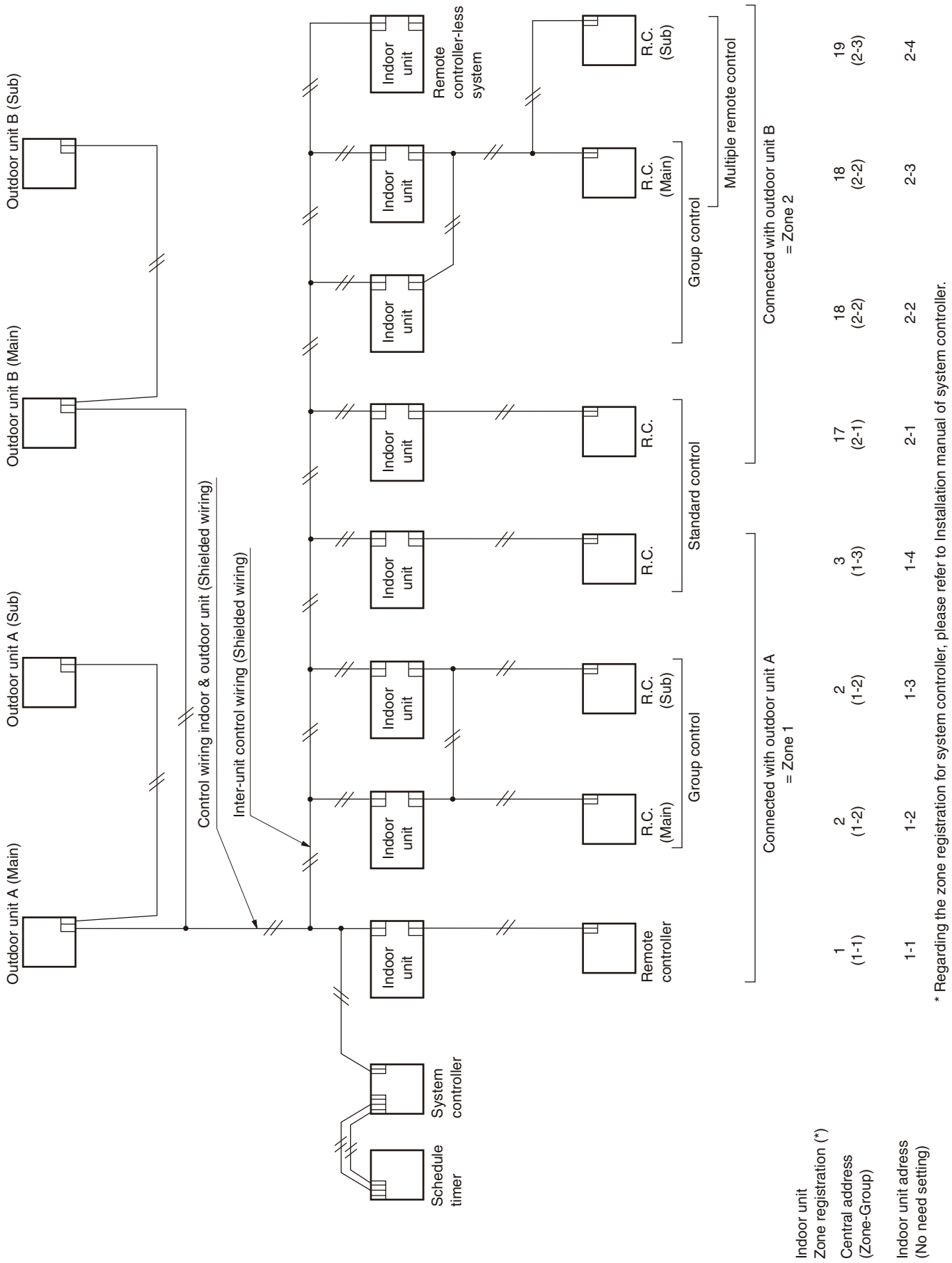

6. Schedule Timer

Schedule Timer / CZ-ESWC2

■ Operation Buttons

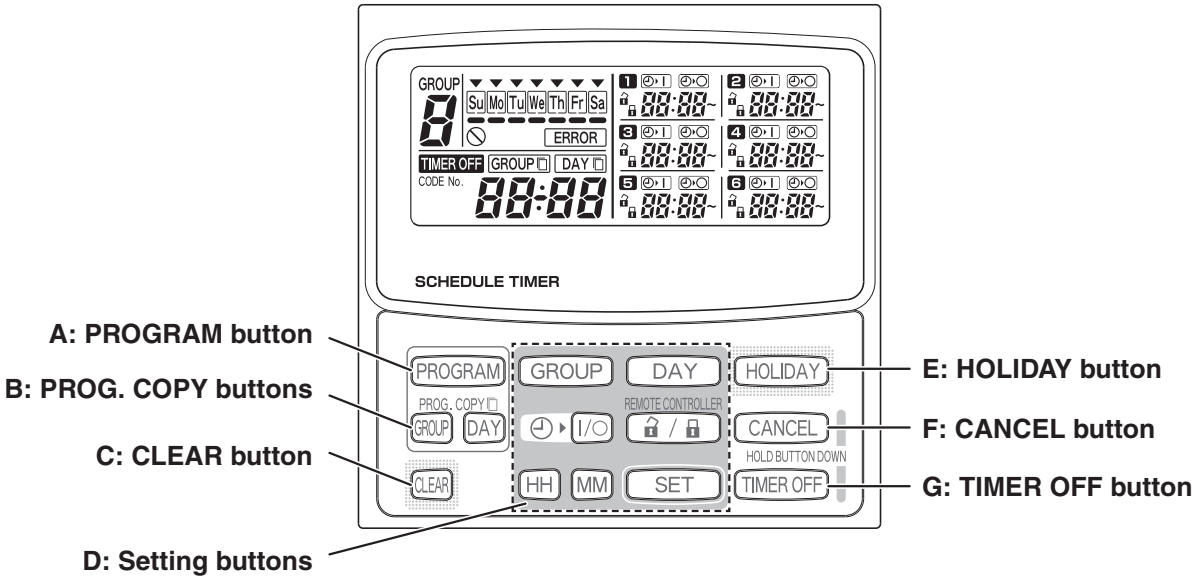

A: PROGRAM button	Use to start setting programs and to enter program settings.
B: PROG. COPY buttons	Use to copy programs to groups or specific days in a schedule. (Refer to page 3-92)
C: CLEAR button	Press to clear the settings of the currently displayed program. • The current program is not cleared unless the PROGRAM button is pressed after pressing the CLEAR button.
D: Setting buttons	Use to make program settings and to set the present time.
GROUP	Press to set groups for programmed operation.
DAY	Press to set today's day and days of programmed operation.
HH MM	Press to set the present time and times used in programmed operation.
I/○	Use to start/stop indoor units via the timer.
REMOTE CONTROLLER	Use to enable/disable remote controller operation via the timer.
SET	Use to set programmed operation trigger time. • Program settings are not entered unless the PROGRAM button is pressed at the end of setting operations.
E: HOLIDAY button	Press to set and cancel holidays during a scheduled week of operation.
F: CANCEL button	Press to cancel the current program setting operation, copying operation or holiday setting operation. When the CANCEL button is held down for 2 seconds, the current setting operation or copying operation is canceled and the normal display returns.
G: TIMER OFF button	Press to turn the timer OFF when timer operation will not be used for a long period of time. When this button is held down for 2 seconds, TIMER OFF appears on the display. Programs cannot be run until the button is again held down for 2 seconds.

- Some of the above features are disabled when the unit is installed. If the button of a disabled feature is pressed, ⃠ appears on the display.
  For more information, contact your dealer.

3

6. Schedule Timer

■ **Display**

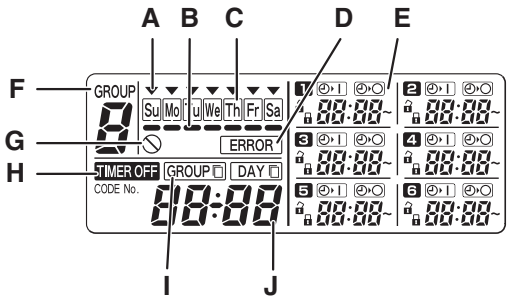

A: Today's day of the week (▼)	Indicates today's day of the week.
B: Program schedule indication (▬)	Appears under days that are scheduled for program operation.
C: Holiday schedule indication (▯)	Appears around scheduled holidays. (Refer to page 3-96)
D: ERROR indication	Displayed when a mistake is made during timer setting.
E: Timer program	Displays set timer programs. Also, indicates the copy source/destination during group program copying.
F: Group No.	Up to 8 groups can be selected and displayed.
G: ⃠ (Disabled Feature) indication	Displayed if the selected feature was disabled during installation.
H: TIMER OFF indication	Displayed when the timer has been turned OFF.
I: Copy mode indication	Displayed when copying a program into a group or day of the schedule.
J: Present time	Displays the present time on a 24-hour clock. Also, displays settings in the various setting modes.

3

Using the Schedule Timer

To use the schedule timer, follow the steps below.

STEP 1 **Turn ON power to the air conditioner.**

- Turn ON power to the air conditioner connected to the schedule timer. The schedule timer performs initial communications with the indoor units, during which SC An blinks on the display.

NOTE

Do not turn off the power mains in heating and cooling seasons. (This keeps the crankcase heater electricity turned on, which protects the compressor at startup.) If the air conditioner has been OFF for a long period of time, turn on power 5 hours before starting operation.

STEP 2 **Make the initial settings of the schedule timer.**

- Set the present time and today's day of the week. (Refer to page 3-86)

STEP 3 **Set up programs of the schedule timer.**

- Make settings for programmed operation. (Refer to page 3-88)

6. Schedule Timer

■ Setting the Present Time

Set the present time. (Example: When the present time is 12:45)

STEP 1 **Hold down the SET button and press the HH button to set the hour.**

- The hour increases one hour at a time with each single press of the HH button while the SET button is held down.
- The hour scrolls rapidly when both the SET button and HH button are held down. (Example: To set 12:00, release the HH button when “12” is displayed.)
- When the SET button is released, the hour is set and the indication changes from blinking to lighting.

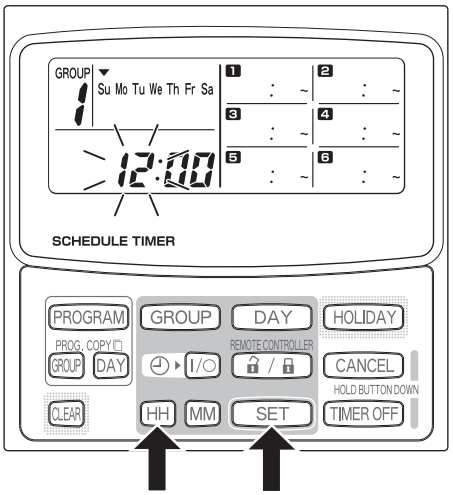

STEP 2 **Hold down the SET button and press the MM button to set the minutes.**

- The minutes increase one minute at a time with each single press of the MM button while the SET button is held down.
- The minutes scroll rapidly when both the SET button and MM button are held down. (Example: To set 00:45, release the MM button when “45” is displayed.)
- When the SET button is released, the minutes are set and the indication changes from blinking to lighting.

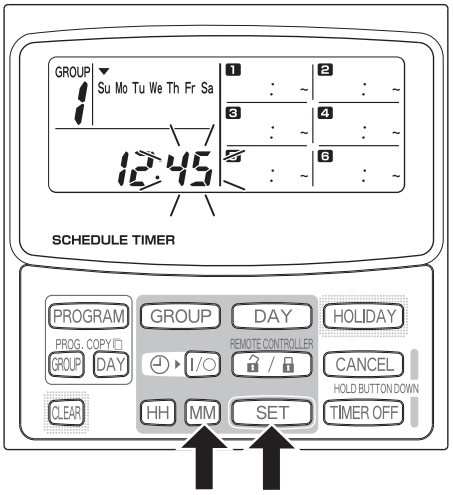

NOTE

- **Pressing just the HH or MM button does not change the time.**

3

6. Schedule Timer

■ Setting Today's Day of the Week

Set today's day of the week. (Example: When today is Wednesday)

STEP 1 **Hold down the SET button and press the DAY button to set today's day of the week.**

- ▼ blinks and moves one day at a time across the days of the week with each single press of the DAY button while the SET button is held down.
- When the SET button is released, the day of the week is set and the ▼ changes from blinking to lighting.

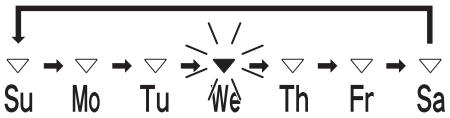

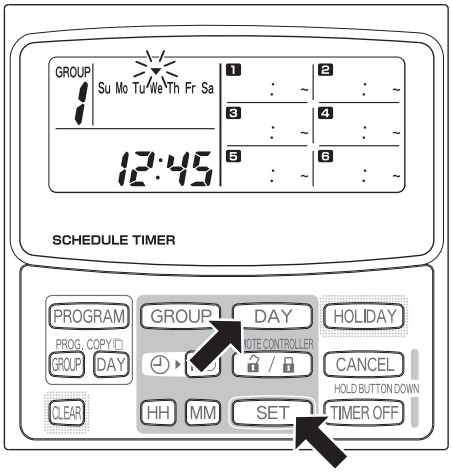

NOTE

- **Pressing just the DAY button does not change the day of the week.**

3

6. Schedule Timer

■ Setting Up Programmed Operations

Correctly set the present time and today's day of the week.
Unless both are correctly set, the programs will not run as expected.

- Up to 6 programmed operations can be set per day for each group and day of the week.
- A combination of the below operations can be set for each timer program.
  – Air conditioner starting/stopping
  – Remote controller operation enable/disable *1
- To change the settings of an existing program, use the same below procedure used to set up a new program.

*1 The remote controller operation enable/disable setting is disabled depending on installation conditions. If so, ⊘ appears on the display when the [🔒 / 🔒] button is pressed.
For more information, contact your dealer.

Example settings

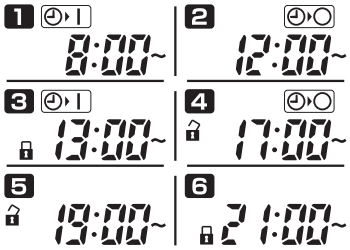

STEP 1 **Press the PROGRAM button to select a group.**

- When the PROGRAM button is pressed, the group No. and today's day of the week start blinking and the present time indication changes to a blinking "PG-1".
- Press the GROUP button to select a group for programmed operation and then press the SET button.

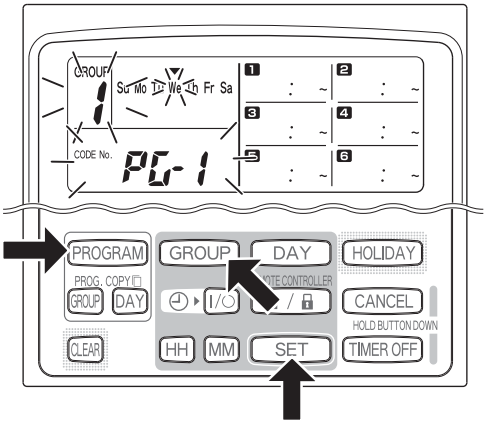

NOTE

- Group selection is disabled depending on installation conditions. If so, proceed to the next step.
- The number of selectable groups is set during installation.

STEP 2 **Press the DAY button and select a day of the week for programmed operation.**

- When the SET button is pressed, the program schedule marker (▬) changes from blinking to lighting and, at the same time, the time set in program 1 starts blinking. Also, the present time indication changes to a blinking "PG-2".

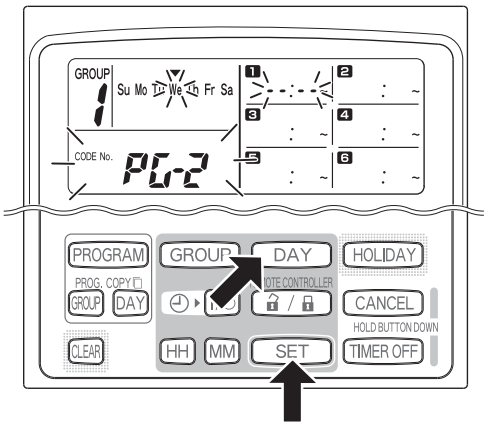

NOTE

- The currently selected day of the week blinks slowly at this time.

3

6. Schedule Timer

STEP 3 **Set up the program and press the SET button.**

- Select timer operation with the (timer ON/OFF) button and (remote controller operation enable/disable) button. Then, set the trigger time with the HH and MM buttons, and press the SET button.
- When the SET button is pressed, the time set in program 1 changes from blinking to lighting and, at the same time, the time set in program 2 starts blinking.

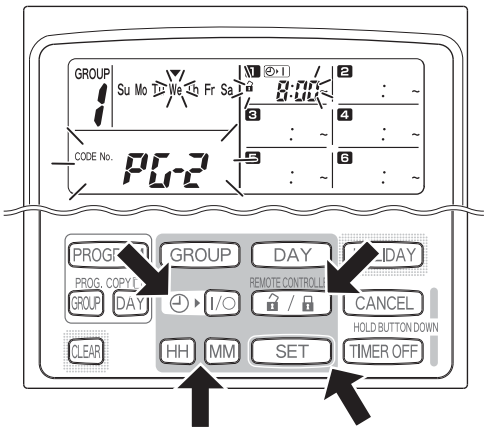

NOTE

- Every time the button is pressed, the timer indication changes in the order of (ON) → (OFF) → no indication.
- Every time the button is pressed, the remote controller indication changes in the order of (enabled) → (disabled) → no indication.
- The remote control operation enable/disable setting is disabled depending on installation conditions. In this case, only timer ON/OFF can be set.

STEP 4 **Set up programs 2 ~ 6 in the same way.**

- When the SET button is pressed, settings are automatically arranged in the order of earliest time first.
- If the SET button is pressed without any new settings being made in the program, program 1 starts blinking again and settings can be changed.
- Similarly, if the SET button is pressed after setting up program 6, program 1 starts blinking again.

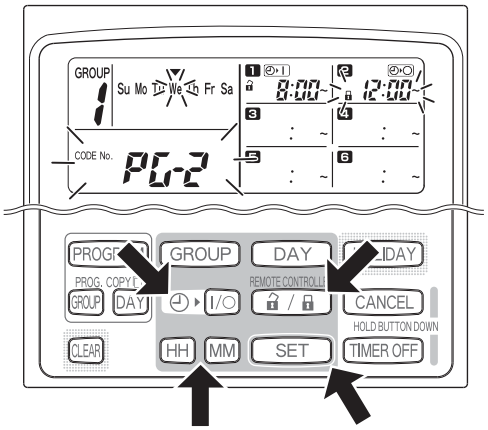

STEP 5 **Press the PROGRAM button.**

- Program settings are entered and the normal display returns.

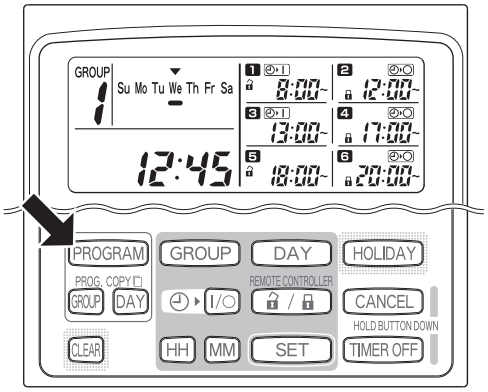

STEP 6 **Set up programmed operation for other groups and days of the week in the same way.**

Programs that have already been set up can be copied into other groups and days of the week. (Refer to page 3-97)

NOTE

- **A "0:00" time setting is interpreted to mean 12:00 midnight.**
- **To cancel program settings during program setup (while "PG-1" or "PG-2"is blinking on the display), hold down the CANCEL button for more than 2 seconds. The normal display returns.**
- If settings are canceled without pressing the PROGRAM button, settings are not entered.

6. Schedule Timer

■ Setting Errors

If time is set as shown below while setting up a program, “ERROR” is displayed (the ERROR indication blinks). Therefore, correct the time setting.

If Program Times Are the Same

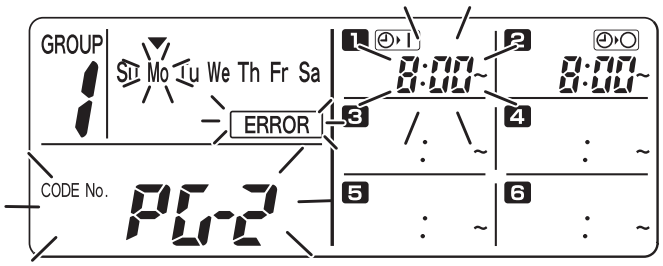

STEP 1 Every time the SET button is pressed, the setting mode switches between programmed operations of the same time setting (1 and 2 in the above example), therefore select the time setting to correct.

STEP 2 Change the time setting with the HH and MM buttons so that the times are no longer the same.

STEP 3 Press the SET button and check “ERROR” is not displayed.

STEP 4 Press the PROGRAM button to end the setting mode.

Example Time Settings That Do Not Cause Errors

The below time settings do not generate an error.

1) When ON and OFF times are staggered

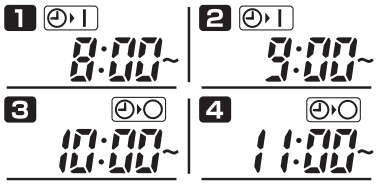

2) When OFF time is earlier than ON time

3

6. Schedule Timer

■ How to Check Program Times

You can check the programmed times for each group and day of the week.

STEP 1 **Press the GROUP button and select a group whose time you want to check.**

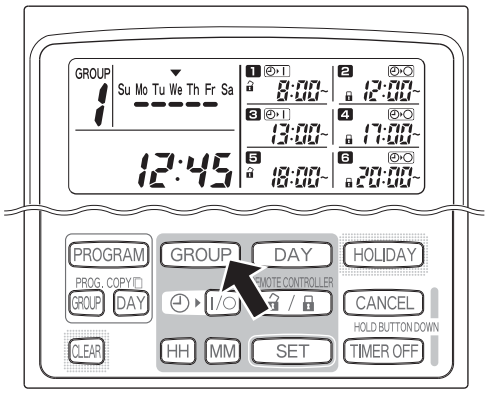

NOTE

- Group selection is disabled depending on installation conditions. If so, proceed to the next step.

STEP 2 **Press the DAY button.**

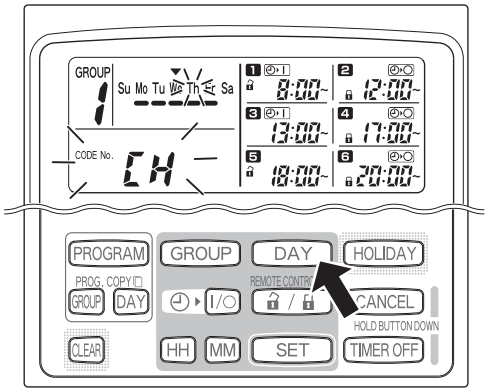

- When the DAY button is pressed the first time, tomorrow's day of the week starts blinking and the program settings for tomorrow are displayed.
- Every time the DAY button is pressed, the program settings change in order of the days of the week.
- Pressing the GROUP button displays the program settings of another group on that same day.

STEP 3 **End checking.**

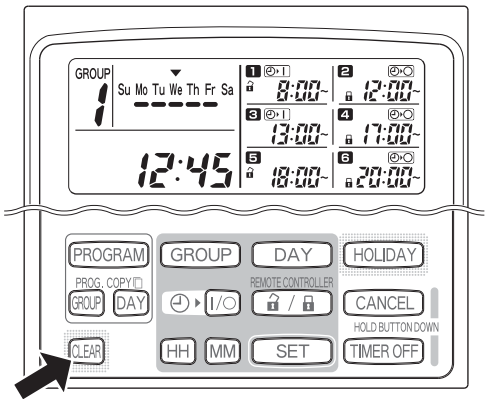

- Press the CLEAR button. The normal display returns.

NOTE

- Holding down the CANCEL button for more than 2 seconds also returns the normal display.

3

6. Schedule Timer

■ How to Copy Program Times

You can copy the already set program of one day into another day (Day Program Copying), as well as copy the entire week programmed for one group into another group (Group Program Copying).

Example of Day Program Copying (Copying Monday's program into Tuesday)

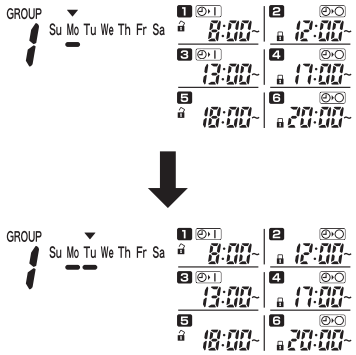

Example of Group Program Copying (Copying group No. 1's program into group No. 2)

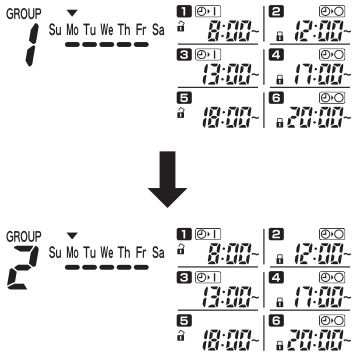

How to Copy Day Programs

STEP 1 **Press the PROG. COPY DAY button.**

- The group No. and the ▼ over today's day start blinking and "CP-1" starts blinking in the present time display area. In this state, select a group in which to copy day programs, using the GROUP button.

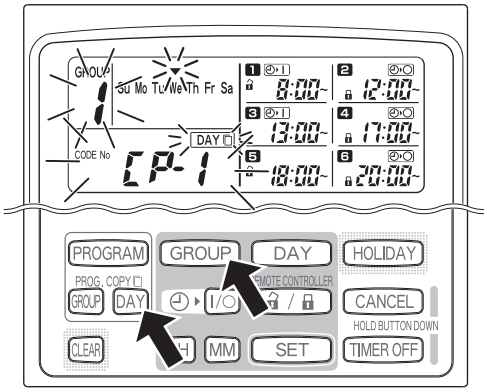

STEP 2 **Select a source day program to copy.**

- Every time the DAY button is pressed, the ▼ moves across the days of the week display, therefore select a day of the week that will serve as the copy source.
- Once having selected the copy source day, press the SET button to set it. The display changes to key you to select a copy destination day.

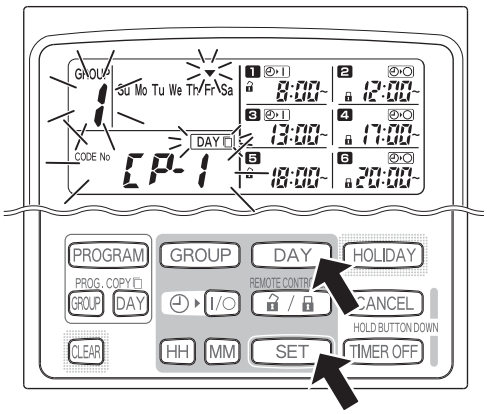

STEP 3 **Select a copy destination day.**

- When the schedule timer is ready for you to select a copy destination day, "CP-2" starts blinking in the present time display area, while the selected copy source day blinks in the days of the week. Therefore, select a day of the week as the copy destination, using the DAY button.

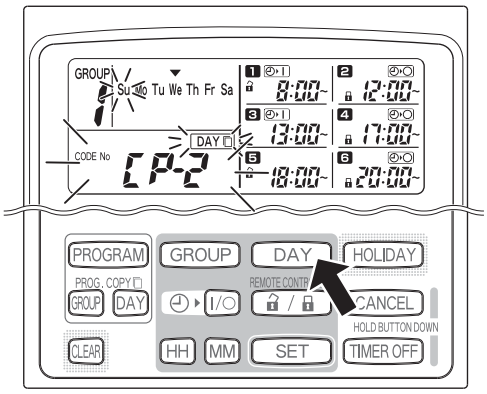

6. Schedule Timer

STEP 4 **Press the SET button to copy.**

- Press the SET button and the program schedule marker (▬) will be displayed.

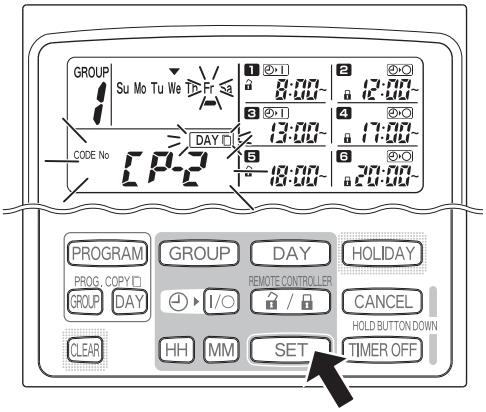

STEP 5 **Select other copy destination days if desired.**

- You can copy the selected source day program into other days by repeatedly pressing the DAY button to select a day of the week followed by the SET button to set it.

NOTE

- Pressing the CLEAR button extinguishes the program schedule marker (▬) and cancels the copy operation.

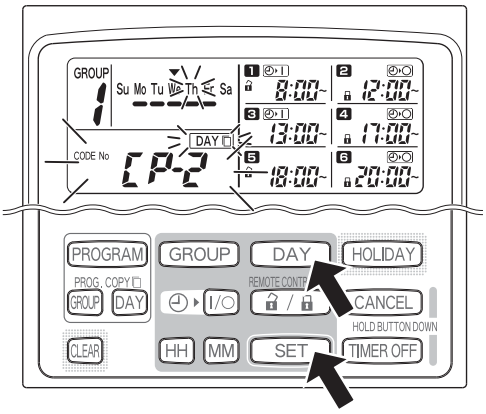

STEP 6 **Press the PROG. COPY DAY button to enter the copied program in the selected days.**

- The normal display returns.

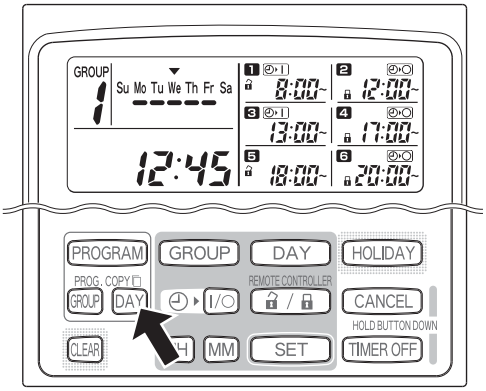

NOTE

- **If a program already exists in the copy destination day, the newly copied program overwrites the existing program.**
- **If you accidentally copy over a program in the day program copy mode, holding down the CANCEL button for more than 2 seconds returns the program to the point prior to pressing the PROG. COPY DAY button in STEP 1. (All changes and copy operations made up until that point are cleared.)**

6. Schedule Timer

■ How to Copy Group Programs

STEP 1 **Press the PROG. COPY GROUP button.**

- "CP-1" starts blinking in the present time display area and "CP" (copy) starts blinking in the program 1 area to indicate the copy source.

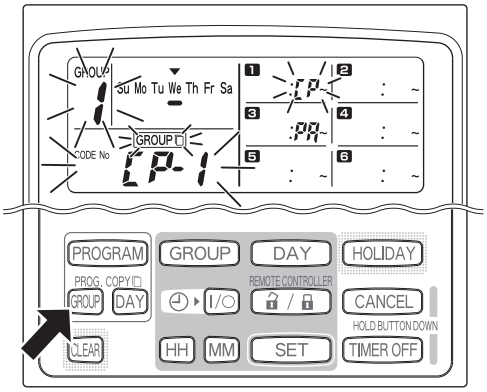

STEP 2 **Select a source group program to copy.**

- Select a copy source group using the GROUP button.
- Once having selected the copy source group, press the SET button to set it. The display changes to key you to select a copy destination group.

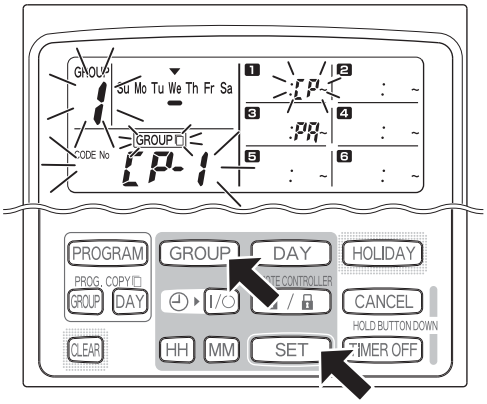

STEP 3 **Select a copy destination group.**

- After pressing the SET button, "CP-2" starts blinking in the present time display area, the copy source group No. set appears in the program 2 area, and "PA" (paste) starts blinking in the program 3 area to indicate the copy destination.
- Select a copy destination group using the GROUP button.

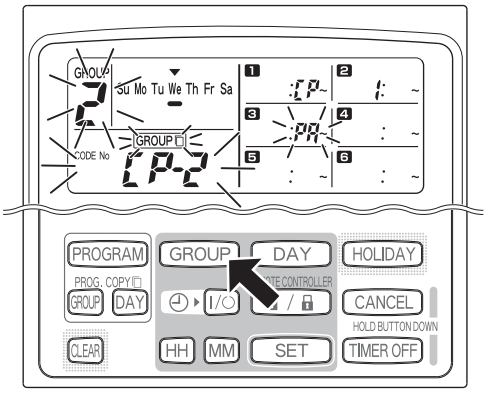

STEP 4 **Enter the selected copy destination group.**

- When the SET button is pressed, the number of the copy destination group appears in the program No. area.

NOTE

- If a group from numbers 1 to 4 was selected as the copy destination group, that number appears in the program 4 area. If a group from numbers 5 to 8 was selected, that number appears in the program 6 area.

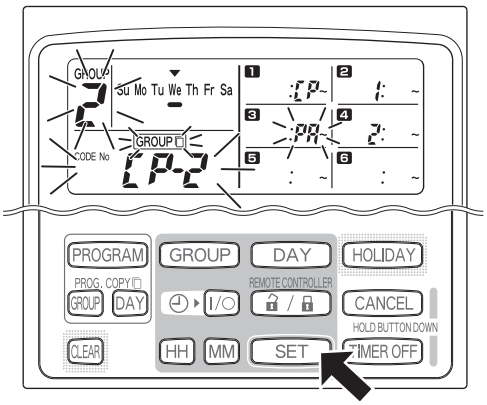

3

6. Schedule Timer

STEP 5 **Select other copy destination groups if desired.**

- You can copy the selected source group programs into other groups by repeatedly pressing the GROUP button to select a group followed by the SET button to set it.

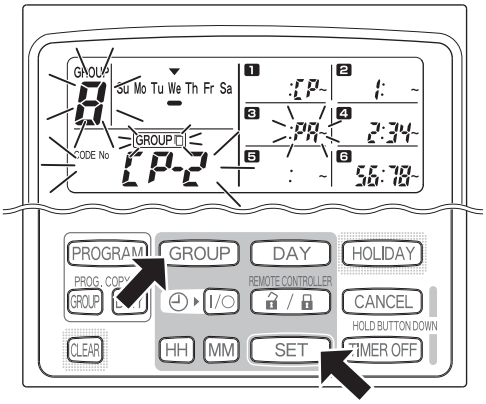

NOTE

- If a group from numbers 1 to 4 was selected as the copy destination group, that number appears in the program **4** area. If a group from numbers 5 to 8 was selected, that number appears in the program **6** area.

STEP 6 **Press the PROG. COPY GROUP button to enter the copied programs in the selected groups.**

- The normal display returns.

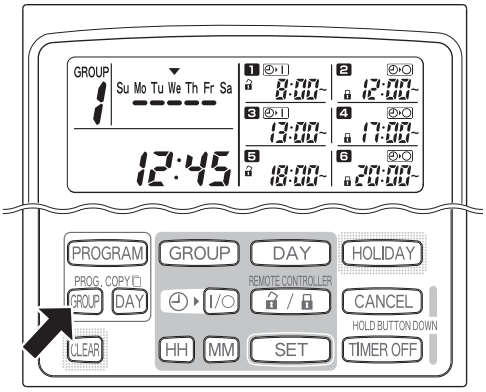

NOTE

- **If a program already exists in the copy destination group, the newly copied program overwrites the existing program.**
- **If you accidentally copy over a program in the group program copy mode, holding down the CANCEL button for more than 2 seconds returns the program to the point prior to pressing the PROG. COPY GROUP button in STEP 1. (All changes and copy operations made up until that point are cleared.)**

3

6. Schedule Timer

■ How to Set Holidays in a Scheduled Week of Operation

Operations programmed for a specific day during the week can be temporarily disabled by setting that day as a holiday.

- When the set holiday passes, the holiday setting is canceled and operation is resumed as programmed the following week.
- Holidays can be selected for the week starting from today's day. If today is selected as a holiday, the holiday setting is canceled from the next programmed operation. (Depending on the program, if the program is currently running, the program may not stop.)

Example Setting

Today is Thursday and Friday is set as a holiday.

When Friday comes, the program set for that day does not run.

When Saturday comes, Friday's holiday setting is canceled.

STEP 1 **Press the GROUP button to select a group to go on holiday.**

NOTE

- Depending on installation conditions, group selection is disabled or set so that all groups are automatically selected for the holiday feature. If so, proceed to the next step.

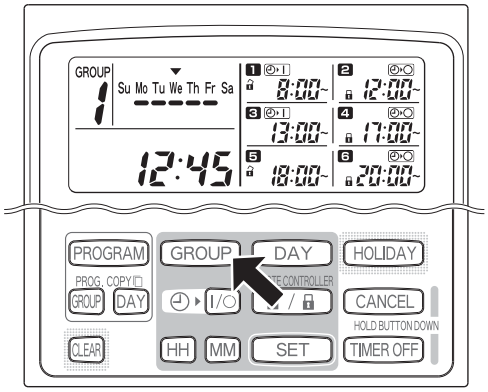

STEP 2 **Press the HOLIDAY button.**

- "HL" starts blinking in the present time display area and today's day of the week starts blinking.

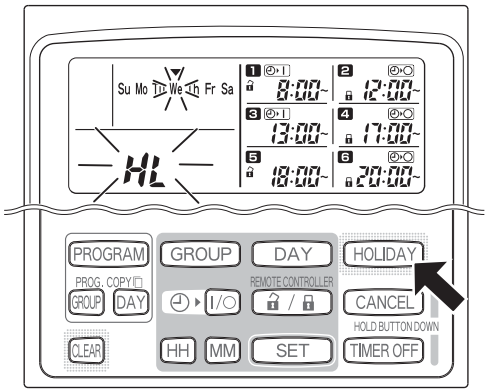

STEP 3 **Select a day as the holiday using the DAY button, and press the SET button.**

- A "▢" appears over the selected holiday.
- To select other holidays, select a day using the DAY button and set it with the SET button.
- If you made a mistake or want to cancel a holiday, press the CLEAR button.

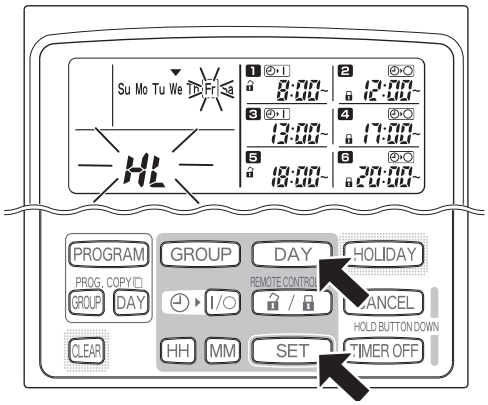

6. Schedule Timer

STEP 4 **Press the HOLIDAY button to enter the holiday.**

- The normal display returns.

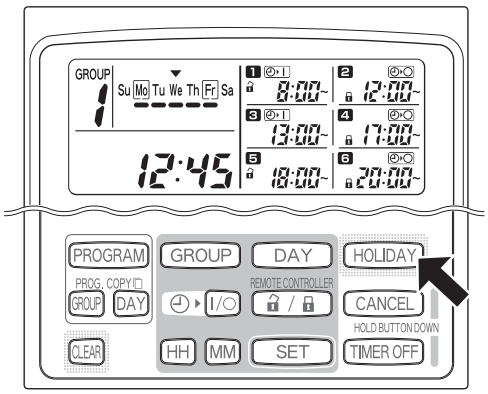

■ How to Disable the Timer Operation

To halt programmed operation for one week or more, you can disable all timer programs.

- Once the timer has been disabled, programmed operations are not run until the below procedure is performed.

NOTE

- During installation, the remote controller may be set to disable the timer for individual groups. In this state, the timer is disabled only for the selected group, therefore press the GROUP button to confirm which group is selected.

3

Hold down the TIMER OFF button for more than 2 seconds

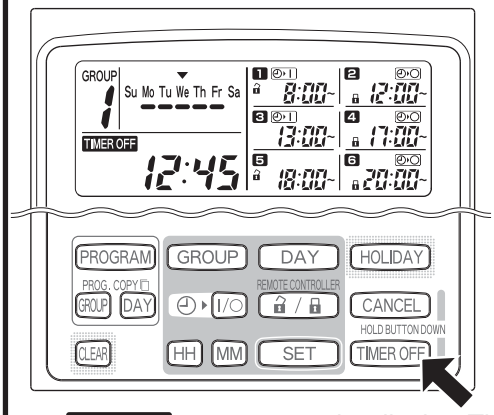

- TIMER OFF appears on the display. The timer is disabled from the next scheduled program.

To turn the timer back ON, hold down the TIMER OFF button for more than 2 seconds

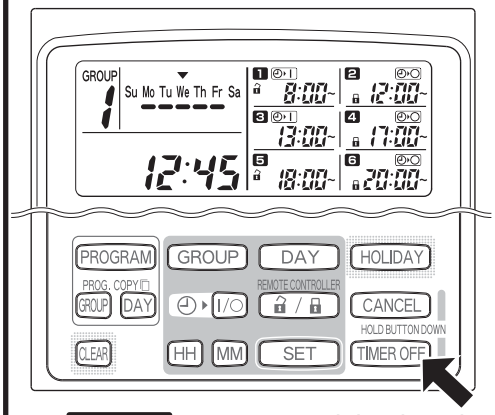

- TIMER OFF goes out and the timer is enabled from the next scheduled program.

6. Schedule Timer

■ How to Clear Programs

Press the PROGRAM button.

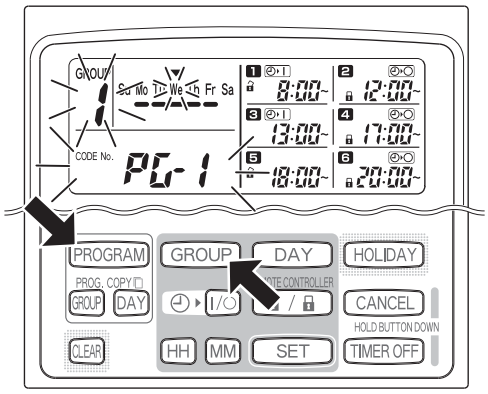

- When the PROGRAM button is pressed, the group No. and the present day of the week start blinking and the present time indication changes to a blinking “PG-1”.
- Press the GROUP button to select a group to clear.

NOTE

- Group selection may be disabled during installation. If so, proceed to the next step.
- Holding down the CANCEL button for more than 2 seconds returns the program to the point prior to pressing the PROGRAM button. (All operations made up until that point are cleared.)

To cancel specific days

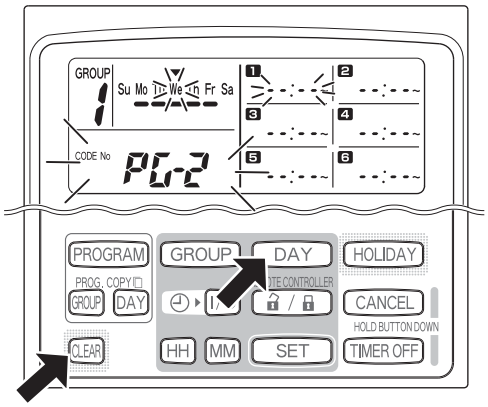

- Select a day to cancel using the DAY button and press the CLEAR button. All settings in programmed operations 1 through 6 are cleared. The display appears as shown above.
- Press the PROGRAM button to enter the clear operation. The normal display returns without the program schedule marker (▬) underneath the days of the week.

To cancel individual programs on specific days

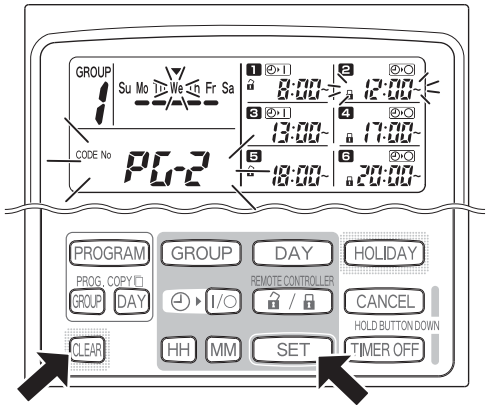

- Select a day and press the SET button. Programmed operations 1 through 6 start blinking in rotation, therefore press the CLEAR button when the programmed operation to clear starts blinking. (The remaining programmed operations are automatically arranged in the order of earliest time first.)
- Press the PROGRAM button to enter the clear operation. The normal display returns.

Example:
Display after clearing programmed operation 2 above

3

6. Schedule Timer

■ Schedule Timer and Air Conditioner Operation

Air conditioners operate either according to operations programmed from the schedule timer (starting/stopping and remote control operation enable/disable) or according to a connected remote controller or system controller.

Schedule timer settings (Example)

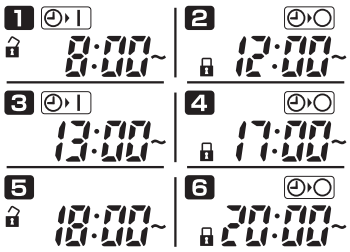

Operation without system controller operation

- If remote controller operation is enabled, the air conditioner can be started/stopped from the remote controller. (The air conditioner responds to the most recently pressed button.)

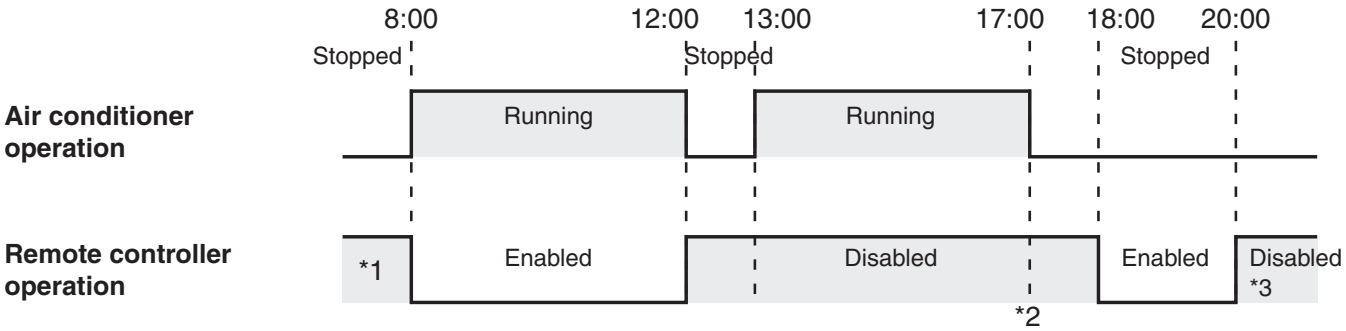

*1 Whether remote controller operation is enabled or disabled depends on the setting of the previous day.
*2 Since remote controller operation is disabled, operation remains disabled.
*3 The remote controller remains disabled the next day and thereafter until it is enabled in the remote controller operation enable/disable setting.

Operation with system controller operation

- If remote controller operation is enabled, the air conditioner can be started/stopped from the remote controller. (The air conditioner responds to the most recently pressed button.)
- The remote controller operation enable/disable set from the system controller (Centralized control 1 to 4) is canceled according to programmed operations.

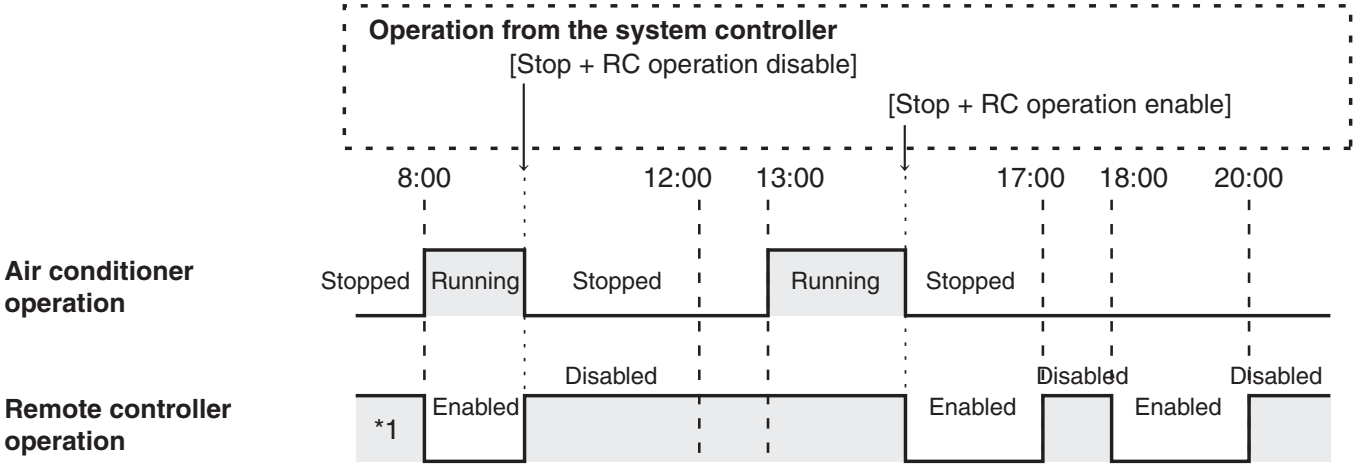

*1 Whether remote controller operation is enabled or disabled depends on the setting of the previous day.

6. Schedule Timer

■ Power Outages

If the air conditioner is running when power is lost, the air conditioner remains OFF when power is restored. Also, if remote controller operation was disabled when power was lost, it is enabled for a few minutes when power is restored.

- Programmed operations scheduled for times that come after power is restored run as usual.
- Program settings are retained in the non-volatile memory of the schedule timer, therefore they are not cleared in the event of a power outage. Also, the present time and today's day of the week are retained for a maximum of 100 hours by the internal battery.

Schedule timer settings (Example)

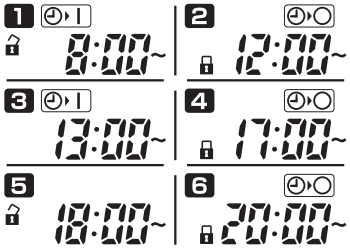

Operation when power is not lost

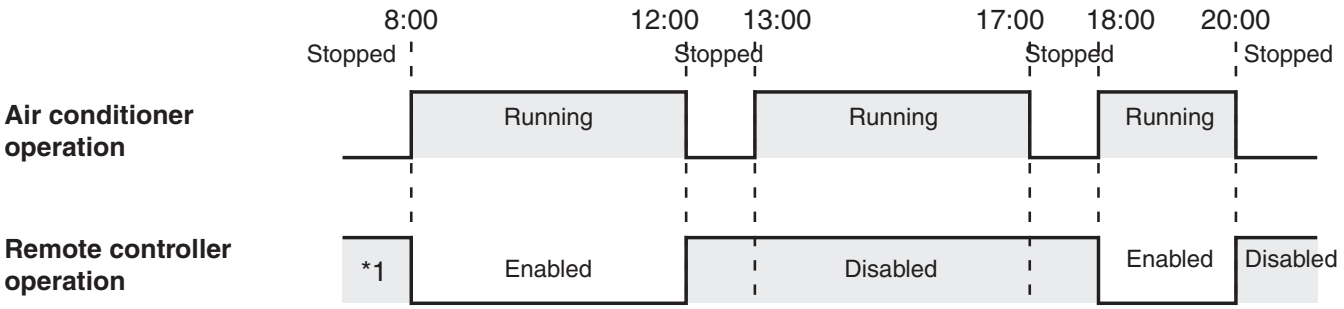

*1 Whether remote controller operation is enabled or disabled depends on the setting of the previous day.

Operation when power is lost at 15:00 and subsequently restored

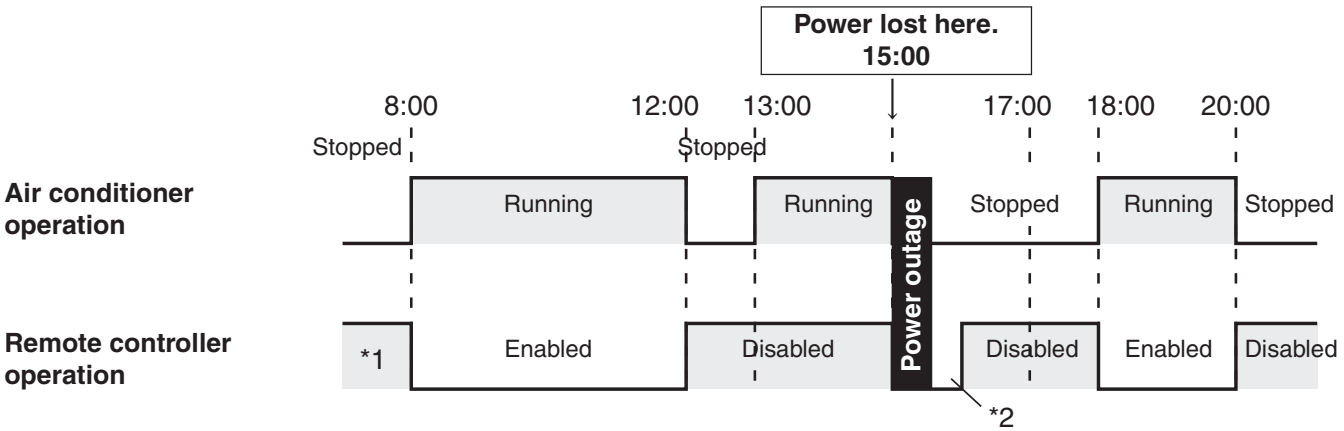

*1 Whether remote controller operation is enabled or disabled depends on the setting of the previous day.

***2 Remote controller operation is enabled for a few minutes after power is restored.**

6. Schedule Timer

■ Troubleshooting

Before requesting servicing, check the following.

	Trouble	Cause/Remedy
Check before requesting servicing	SC An blinks on the display.	The schedule timer is performing initial communications with connected indoor units. Wait for communications to finish.
	Air conditioners do not operate as scheduled when the set time comes.	The timer has been disabled. (Refer to page 3-97) A holiday has been scheduled. (Refer to page 3-96)
	Air conditioners can be started and stopped from the remote controller even though the program disables remote controller operation.	Power to the air conditioner was lost and subsequently restored. (Refer to page 3-100)
	88:88 blinks in the present time display area.	Power to the air conditioner was lost for a long period of time. Set the present time and today's day of the week again. (Refer to pages 3-86 and 3-87)

If trouble persists despite taking the above action, stop the schedule timer, turn off the unit and report the serial number and problem to your dealer. Never service the unit yourself as this is dangerous.

6. Schedule Timer

■ Accessories for Schedule Timer

No.	Supplied parts	Q'ty
1	T10 power wire (with current fuse) *1	1
2	T10 relay wire *2	1
3	Power wire for connection to system controller	1
4	Screws M4 x 25	2

No.	Supplied parts	Q'ty
5	Spacers	2
6	Wire joints	7
7	Operating Instructions	1
8	Label	1
9	Earth screw for T10 (for indoor unit) 4 x 8 - 3	1

*1 If the fuse blows as a result of a wiring short-circuit, mis-wiring, or overcurrent, replace it with a 125 V, 0.5 A fuse.

*2 Use it according to the form of T10 connector.

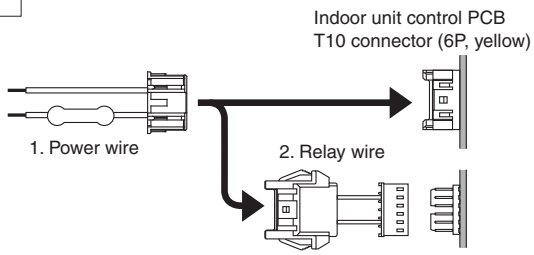

Fig. 3-65

■ Installing the Schedule Timer

NOTE

- Avoid twisting the inter-unit control wiring or the input/output wiring together with power or other wiring, and avoid running them in the same metal conduit. Doing so can cause malfunction.
- Install the schedule timer at a location away from any sources of electrical noise.
- Install a noise filter or take other appropriate action if electrical noise affects the power supply circuit of the unit.

*3 For used in North America, remove the wiring for earth (green) on the back case.

When mounting the back case to the electric junction box, tighten the screws securely unitl the screw heads touch the back case. Otherwise, a loose screw head may damage the PCB on the back of the top cover when mounting the top cover. But do not over-tighten the screws. Over-tightening may deform the back case and cause the unit to fall.

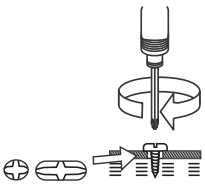

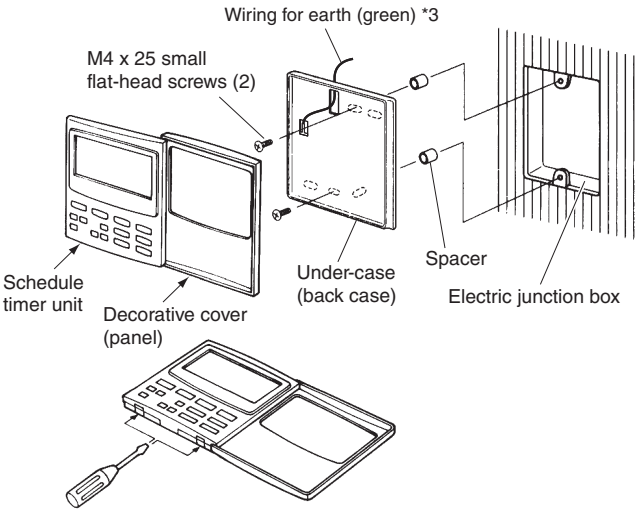

Fig. 3-66

(1) Open the panel on the schedule timer unit. Insert a standard (flat-head) screwdriver or similar tool into the notches on the bottom of the schedule timer unit to open and remove the back case.

(2) Use the 2 supplied M4 machine screws and install the schedule timer back case onto the switch box. Before installing, use a screwdriver or similar tool to press on and open the screw holes that correspond to the Electric junction box that is used. When fastening the case, use spacers and do not tighten the screws too much. If the schedule timer does not fit tightly against the wall, cut the spacers as required to make adjustments.

(3) Connect the supplied power wire (2-core) and inter-unit control wire (3-core) to the schedule timer unit. (Refer to “Wiring the Schedule Timer.”)

(4) Align the schedule timer unit with the tabs on the back case and press to install it.

6. Schedule Timer

■ Installation of Connected Schedule Timers

When installing schedule timers (remote controller switches, system controllers, etc.) onto the wall, use the method shown in Figs. 3-71 and 3-72.

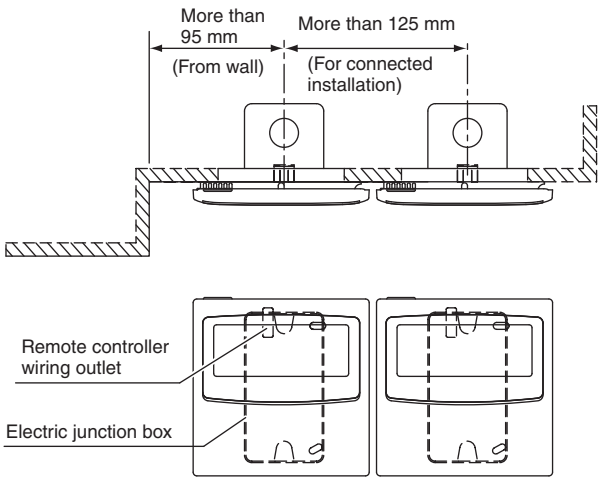

Fig. 3-67

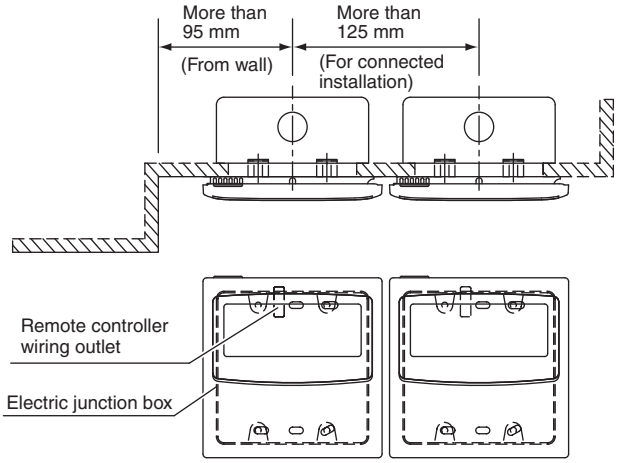

* For maintenance reasons, leave a gap of 25 mm or more between the remote controller switch and schedule timer if they are arranged in parallel above/below each other.

Fig. 3-68

3

■ Wiring the Schedule Timer

- Before beginning wiring
  - Use 0.5 – 2 mm^2 wires for field supply wiring.
  - For inter-unit control wiring, use signal wires that allow the remote controller wiring to be differentiated from the power wiring, and take care to prevent miswiring. **(Miswiring will damage the schedule timer.)**
  - Use shielded wiring for Inter-unit control wiring and power wiring(T10). (Except North America)
  - Check that the schedule timer communications wiring and power wiring are connected correctly. (Fig. 3-69)

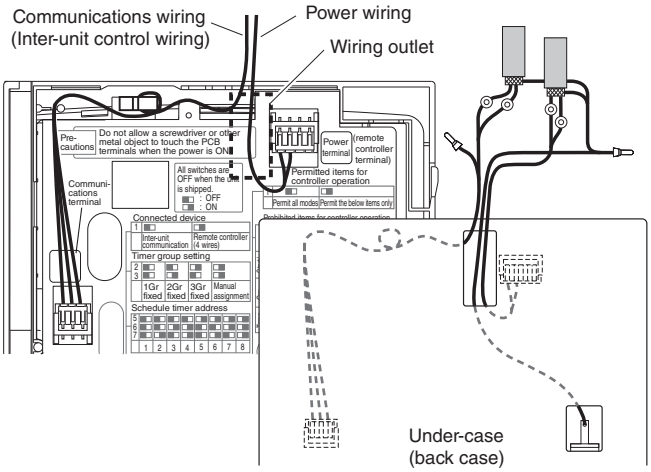

Fig. 3-69

<Basic Wiring Diagram>

- Route the A/C inter-unit control wiring for central control as shown in the figure at right.
- The maximum number of indoor units that can be connected to a single system is 64. The maximum number of outdoor units is 30.
- The maximum number of schedule timer units that can be connected is 8. (A maximum of 10 schedule timer units and other central control devices can be connected.)

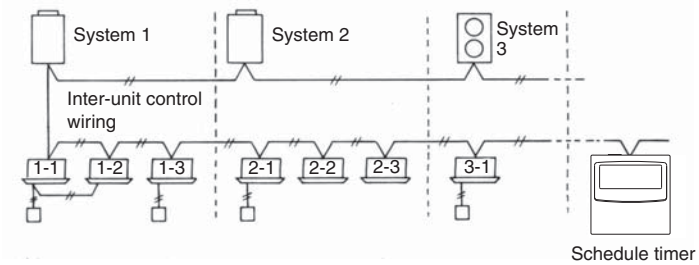

Fig. 3-70

NOTE Depending on the model of A/C, a local adapter may be required.

6. Schedule Timer

- Wiring

The schedule timer wiring can be connected by the following two methods. Select one of these connection methods according to the actual installation location.
When wiring, extend the lengths of the wires using wire joints (provided) and extension wires (field supply).

CAUTION

When installing multiple schedule timers, avoid the use of cross-over wiring.

- Connection diagram (Be sure to use the provided wires as the power wiring.)

If a system controller is also installed:

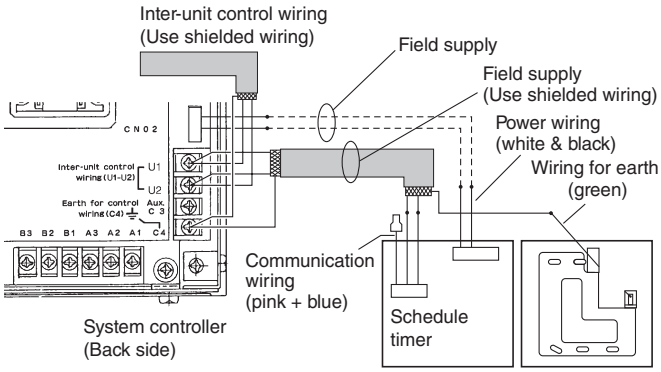

Fig. 3-71

Connect the wires for the schedule timer inter-unit control wiring (see Note below) to the U1 and U2 terminals on the system controller terminal board. Connect the system controller power wiring to CN02 and to the schedule timer power wires (white + black).

- The inter-unit control wiring has no polarity. The wiring may be connected in either direction to U1 and U2. (Use shielded wirng)
- The power wiring has no polarity. The wiring may be connected in reverse.
- **The length of the power wiring must be no more than 100 m.**

Note: The inter-unit control wires are pink + blue + blue (using wire joint crimping). Use pink + blue wires.

If a system controller is not installed (power is supplied from the indoor unit):

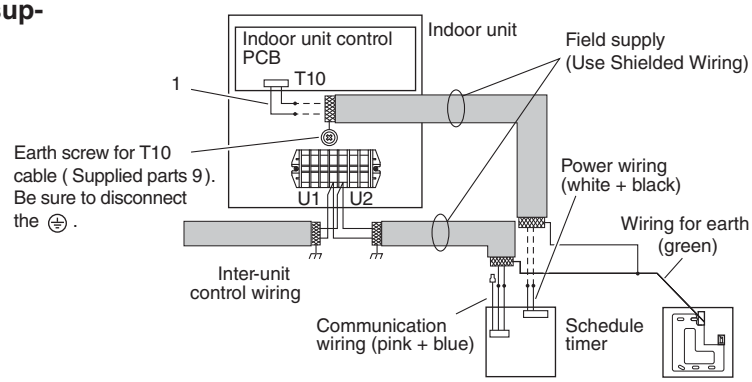

Fig. 3-72

If power is supplied from the indoor unit control PCB of a nearby indoor unit, connect the provided T10 terminal connection wires to the T10 terminal on the indoor unit control PCB, and to the schedule timer power wires.

- The inter-unit control wiring has no polarity. The wiring may be connected in either direction to U1 and U2. (Use shielded wiring)
- If necessary, use a relay wire when connecting the wiring to the indoor unit control PCB.
- The power wiring has no polarity. The wiring may be connected in reverse. (Use shielded wiring)
- **The length of the power wiring must be no more than 100 m.**

NOTE The only functions of the schedule timer are indoor unit ON/OFF and remote controller enable/disable operations. It is therefore recommended that during installation, a system controller, remote controller, or similar device be installed next to the schedule timer so that the operation mode and other information can be checked.
(If the system controller or other central control device is not present, the schedule timer cannot be used in combination with a system that does not utilize remote controllers.)

6. Schedule Timer

■ About the Setting Switches

Complete the switch settings before turning ON the schedule timer power.

S41

* These switches are all OFF at the time of delivery.

Spare (1)
Be sure that these switches are OFF when the system is used.

Timer Group Settings (2, 3)

Function	2	3
1 timer group – fixed	OFF	OFF
4 timer group – fixed	OFF	ON
8 timer group – fixed	ON	OFF
Manual group setting	ON	ON

What is a timer group?
This is a group of indoor units, created by dividing the central control addresses of the 64 indoor units that are connected to the inter-unit control wiring, and assigning a timer program to each group.

Central Control Main/Sub Switching (4) Sub: OFF Main: ON

(1) Set to "sub" (OFF) when using together with the AMY adapter, communications adapter, intelligent controller, multi-controller, LON I/F, and system controller.
(2) In cases other than (1) above, when using together with an ON/OFF central controller, set to "main" (ON) when only 1 schedule timer unit is used.
(3) In cases other than (1) above, and when using with multiple schedule timer units, set only 1 unit to "main" (ON) and set the remainder to "sub" (OFF).

Schedule Timer Address Settings (5, 6, 7)

A maximum of 8 schedule timer units can be connected to the inter-unit control wiring. If multiple units are connected, use the setting switches and allocate the addresses, taking care to avoid duplication.

Function	5	6	7
Address 1	OFF	OFF	OFF
Address 2	OFF	OFF	ON
Address 3	OFF	ON	OFF
Address 4	OFF	ON	ON
Address 5	ON	OFF	OFF
Address 6	ON	OFF	ON
Address 7	ON	ON	OFF
Address 8	ON	ON	ON

Holiday and Operation Disable Settings for Each Group (8)
When this setting switch is OFF, units are all controlled together. When this switch is ON, the units are controlled by the settings for each timer group.

S42

* These switches are all OFF at the time of delivery.

Remote Controller Enable Items (1)
If remote controller enable/disable is used, this switch sets the range for remote controller enable (cancel).
Enable all items* that can be controlled with the remote controller.
→ OFF
Enable only the items determined by setting switches 2, 3, and 4.
→ ON
This switch should be OFF for normal use, or when remote controller enable/disable is not used.

* This refers to the following items: start/stop, operation mode, temperature setting, flap, and fan speed.

Remote Controller Disable Item Switches (2, 3, 4)
When timer remote controller disable is used, set the remote controller disable item switches according to the items for which remote controller operation will be disabled.

Remote controller disabled items		2	3	4
Remote controller disable not used		OFF	OFF	OFF
Start/stop	Central 1	OFF	OFF	ON
Operation mode	Central 4	OFF	ON	OFF
Operation mode + Start/stop		OFF	ON	ON
Temperature setting		ON	OFF	OFF
Temperature setting + Start/stop		ON	OFF	ON
Temperature setting + Operation mode	Central 3	ON	ON	OFF
Temperature setting + Operation mode + Start/stop	Central 2	ON	ON	ON

Central 1 – 4 are the designations for the remote-controller disable modes for the system controller.

Simultaneous time communications (5) Disabled: OFF Enabled: ON
When multiple schedule timers are installed, set this switch to ON to perform time settings for multiple units simultaneously. One minute after the time is set, the time at the other schedule timers will change to match the set time. (Ordinarily this switch is OFF.)

Spare (6, 7, 8)
Be sure that these switches are OFF when the system is used.

3

6. Schedule Timer

■ Creating Timer Groups

The schedule timer can be set for 6 time status changes. These can be used to create up to 8 groups (timer groups). For systems in which schedule timers are used, set the timer groups to match the central control addresses of the indoor units that will be subject to group timer control.
The timer-group settings for the schedule timer involve assignment of central control addresses. Therefore, use the system controller (or other central control device) or wired remote controllers to set the central control addresses of the indoor units, then make the schedule timer settings.

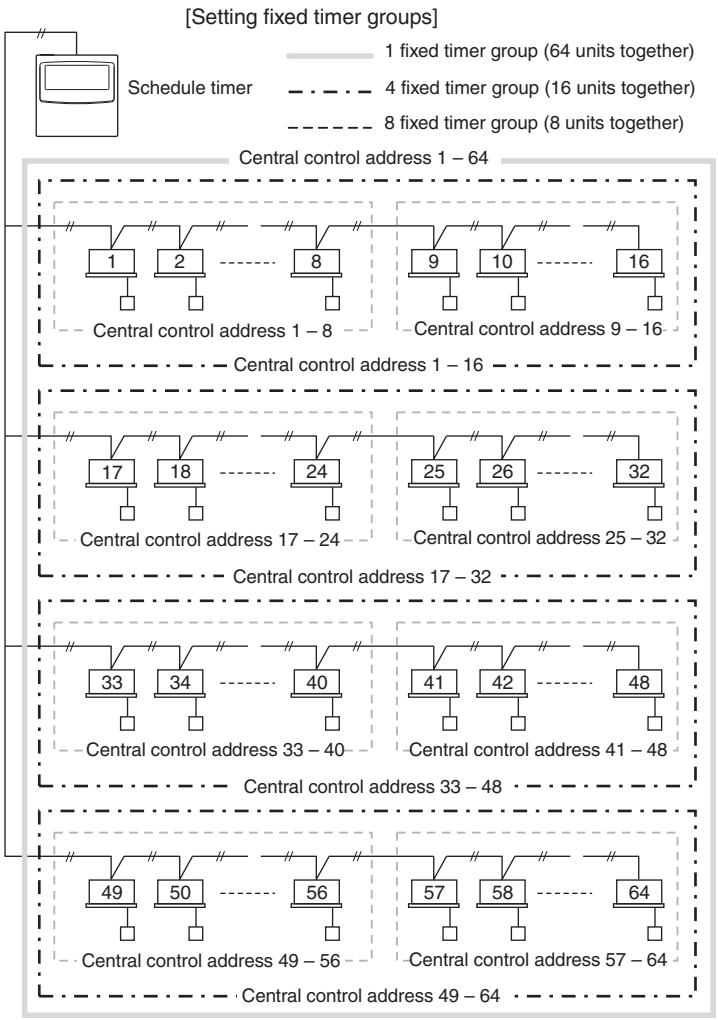

● **Procedure for making fixed timer group settings (fixed groups)**

(1) First, use a different central control device (system controller or other device) or the wired remote controllers to set the central control addresses, as assigned in the figure above, to the indoor units that will be subject to group timer control.

(2) Next, use S41 switches 2 and 3 to set the number of timer groups you wish to create.

(3) Finally, turn ON the schedule timer power. Initial communications are performed. (SCAN blinks in the display.) The normal display appears after several minutes, and the timer group settings are confirmed.

● **Procedure for making manual timer group settings (manual group assignments)**

Manual timer group settings allow central control addresses to be assigned freely within the timer groups.

(1) Turn ON S41 setting switches 2 and 3, then turn ON the power. Restart and initial communications are performed. (SCAN blinks in the display.) The normal display appears after several minutes.

(2) When the normal display appears, press and hold the schedule timer CLEAR button, the timer button, and the button for 4 seconds or longer. “Ad-01” appears, blinking, in the current time display. (Ad indicates “address” and 01 is the central address number.)

(3) Use the GROUP button in the area to select the timer group. Then use the DAY button in the area to select the central control address to assign and register for that timer group. Press the SET button to register the selected central control address.

6. Schedule Timer

(4) To continue registering addresses, repeat step (3). (Central control address numbers will be added to the right side of the LCD display.) To cancel a registered central control address, use the GROUP button in the area to select the timer group, then use the DAY button in the area to select the central control address and press the CLEAR button.

(5) Repeat steps (3) - (4) for each timer group. When registration is completed, press the timer button. The schedule timer restarts automatically and performs initial communications. (SCAN blinks in the display.) The normal display appears after several minutes, and the manually assigned timer group settings are confirmed.

■ Memory Back Up Switch

After installation is completed, check that the backup switch on the reverse side of the schedule timer PCB is turned to ON. (The backup battery will retain the current time for up to 100 hours.)

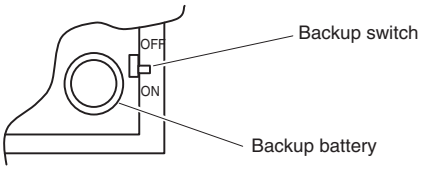

■ Checking the Central Control Addresses and Operating the Units that are Controlled by the Schedule Timer

The schedule timer communicates with the indoor units to check which central control addresses can be controlled with the current timer control. The schedule timer can then be used to start and stop these units.

(1) Press and hold the schedule timer button, TIMER OFF button, and CLEAR button for 4 seconds or longer. “Ad-(central control address)” appears in sequence, blinking.

(2) Use the GROUP button in the area to display the blinking central control addresses in sequential order. In this way, it is possible to check which central control addresses in the displayed timer group can be operated by the timer.

(3) With the selected timer group displayed, press the timer button. Each time the button is pressed the indoor units in the displayed timer group start or stop. Pressing the button in this mode permits all items (operation start/stop, operation mode, temperature setting items) at the indoor units in the displayed timer group where remote controller prohibit is in effect.

(4) After checking the addresses and operating the units, press and hold the CANCEL button for 2 seconds or longer. The schedule timer display returns to the normal display and all controllable indoor units stop.

■ Explanation to Customers

- After work is completed, present the Operation Manual and Information for the Person in Charge of Installation (Electrical) Work to the customer.
- Explain to the customer the methods for use of the system, as described in the Operation Manual.

6. Schedule Timer

■ Installation Work Plan

- Use the wired remote controller to check the unit No. of the indoor units.
  (Start the A/C unit with the wired remote controller, then press the remote controller UNIT SELECT button once to display the unit No. of the main unit.)

Schedule timer			Central control addresses	Indoor unit Unit No. System - Indoor	Room name
Fixed timer group					
1	4	8			
1 At the time of shipment	1	1	1	- , -	
			2	- , -	
			3	- , -	
			4	- , -	
			5	- , -	
			6	- , -	
			7	- , -	
			8	- , -	
		2	9	- , -	
			10	- , -	
			11	- , -	
			12	- , -	
			13	- , -	
			14	- , -	
			15	- , -	
			16	- , -	
	2	3	17	- , -	
			18	- , -	
			19	- , -	
			20	- , -	
			21	- , -	
			22	- , -	
			23	- , -	
			24	- , -	
		4	25	- , -	
			26	- , -	
			27	- , -	
			28	- , -	
			29	- , -	
			30	- , -	
			31	- , -	
			32	- , -	
	3	5	33	- , -	
			34	- , -	
			35	- , -	
			36	- , -	
			37	- , -	
			38	- , -	
			39	- , -	
			40	- , -	
		6	41	- , -	
			42	- , -	
			43	- , -	
			44	- , -	
			45	- , -	
			46	- , -	
			47	- , -	
			48	- , -	
	4	7	49	- , -	
			50	- , -	
			51	- , -	
			52	- , -	
			53	- , -	
			54	- , -	
			55	- , -	
			56	- , -	
		8	57	- , -	
			58	- , -	
			59	- , -	
			60	- , -	
			61	- , -	
			62	- , -	
			63	- , -	
			64	- , -	

3

7. ON/OFF Controller (CZ-ANC2)

1. How to Use the ON/OFF Controller

■ Functions of buttons

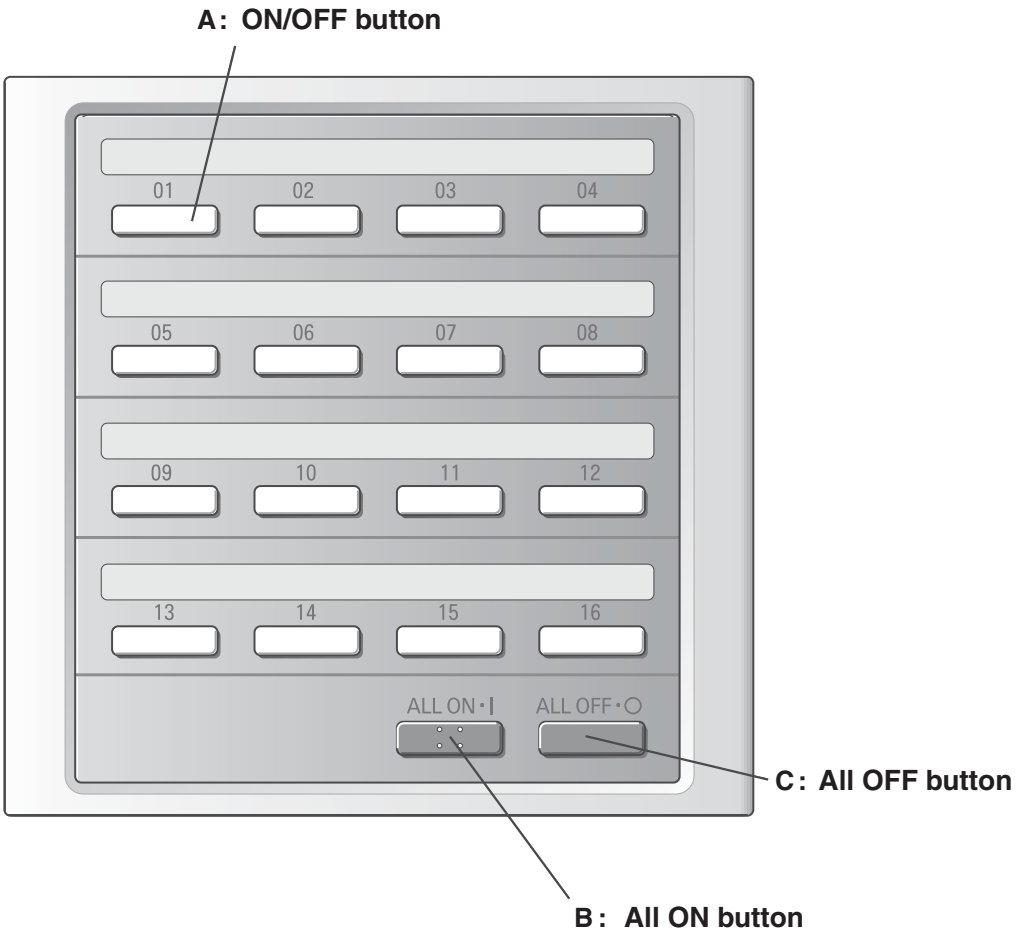

A: ON/OFF button 01 ~ 16	Press this to start up or stop an individual air conditioner.
B: All ON button ALL ON • I NOTE	Press this to start up all the air conditioners at the same time. **The indoor units which can be operated by the ON/OFF controller now start operating in sequence at intervals of 1 to 2 seconds.**
C: All OFF button ALL OFF • O	Press this to stop all the air conditioners at the same time.

7. ON/OFF Controller (CZ-ANC2)

■ How to use the nameplate

The nameplate shows the rooms where the air conditioners are to be operated, and it enables the operating statuses of the air conditioners in those rooms to be checked by the operation indicator lamps.

Steps

1. Insert an implement such as a ballpoint pen into the hole on the left of the transparent cover, and remove the cover.
2. Use a writing instrument such as an oil-based pen to write the names of the rooms on the switch name labels provided, and adhere the labels to the name displays.

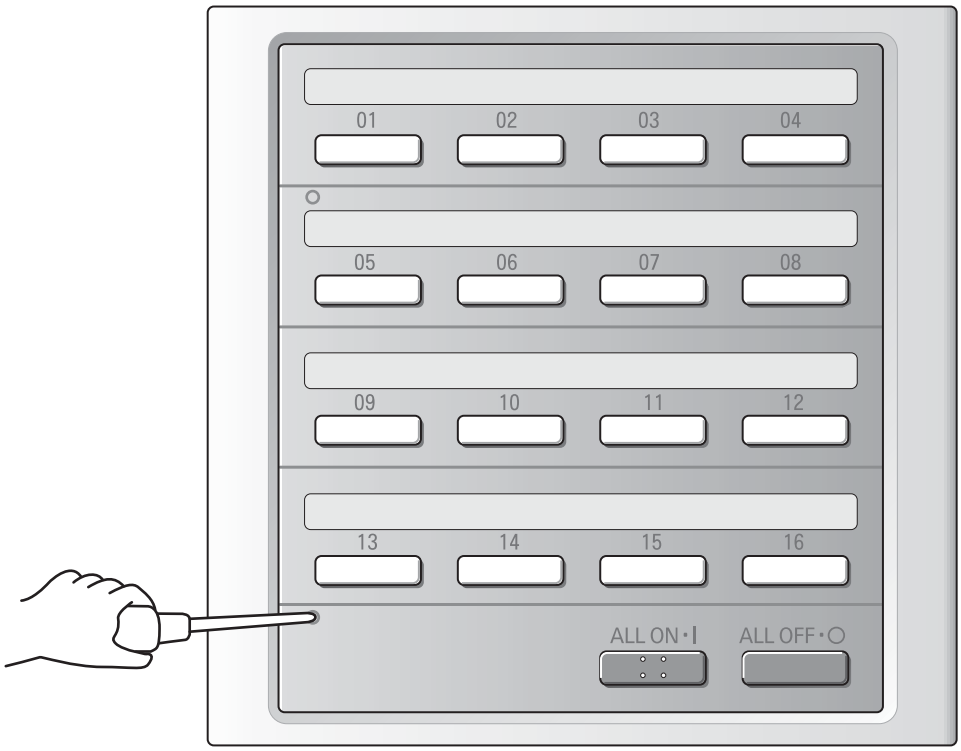

7. ON/OFF Controller (CZ-ANC2)

2. Installation Instructions

■ General

This booklet briefly outlines where and how to install the ON/OFF controller. Please read over the entire set of instructions for the indoor and outdoor units and make sure all accessory parts listed are with the controller before beginning.

NOTE Give these instructions to the customer after finishing the installation.

Part Name	Figure	Q'ty	Remarks
ON/OFF controller	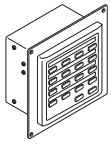	1	
Tapping screw	Truss-head Phillips 4 x 16 mm	4	For securing the system controller
Rawl plug		4	For securing the system controller
Manual		1	For installation
		1	For operation

■ Installation site selection

- Install the ON/OFF controller at a height of between 1 and 1.5 meters above the floor.
- Do not install the ON/OFF controller in a place where it will be exposed to direct sunlight or near a window or other place where it will be exposed to the outside air.
- Be sure to install the ON/OFF controller vertically, such as on a wall.

■ How to install the ON/OFF controller

CAUTION

- Do not twist the control wiring together with the power wiring or run it through the same metal conduit, because this may cause a malfunction.
- Install the ON/OFF controller away from sources of electrical noise.
- Install a noise filter or take other appropriate action if electrical noise affects the power supply circuit of the unit.

WARNING Do not supply power to the unit or try to operate it until the tubing and wiring to the outdoor unit is completed.

7. ON/OFF Controller (CZ-ANC2)

Overview of the ON/OFF controller

Unit: mm

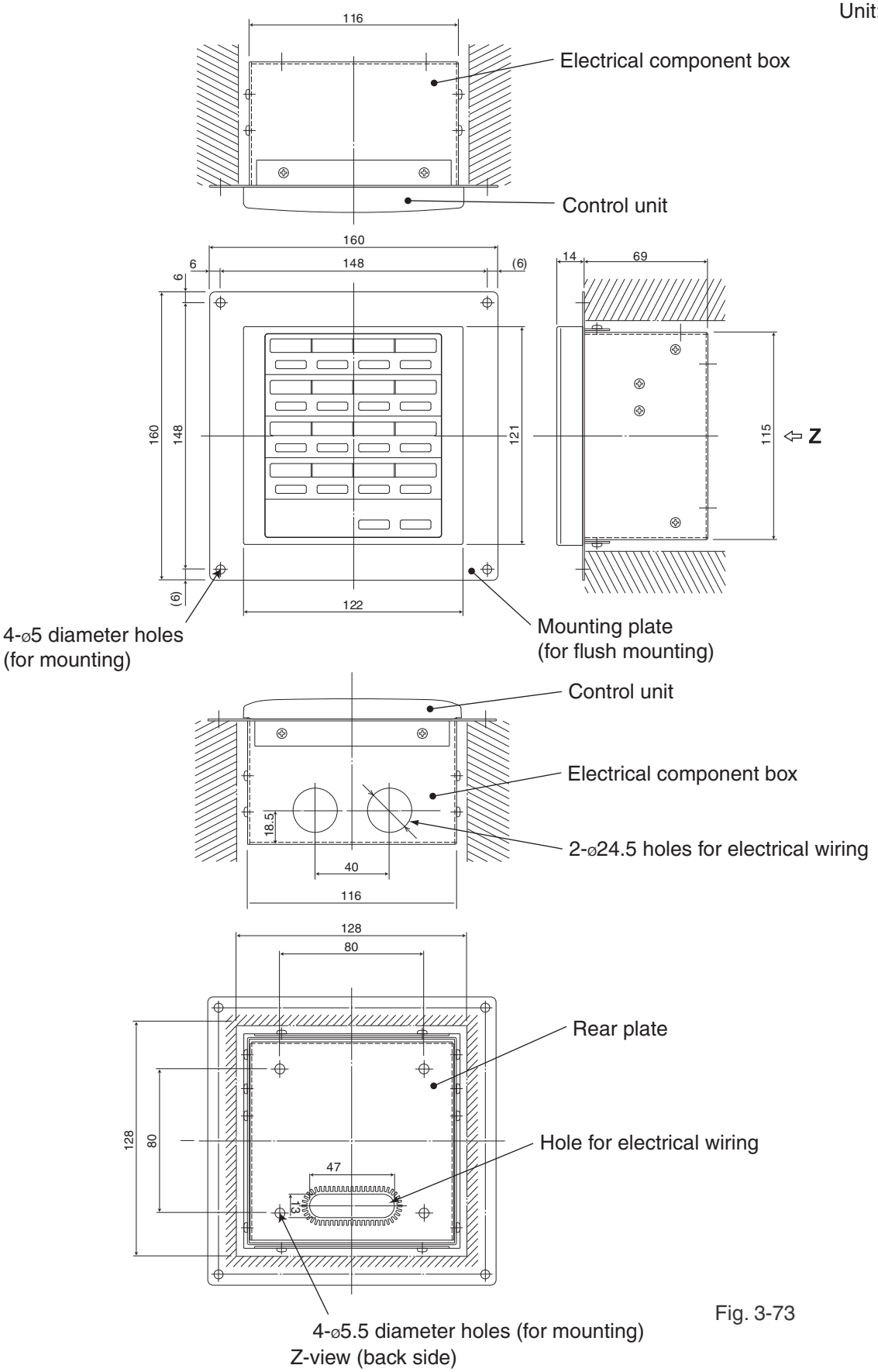

Fig. 3-73

* In order to mount the ON/OFF controller flush with the wall, an opening measuring 128 mm × 128 mm is necessary.

7. ON/OFF Controller (CZ-ANC2)

Installation procedure

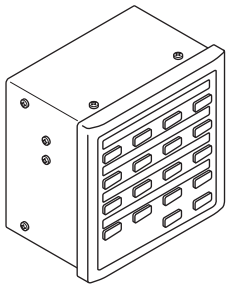

a): Normal mounting

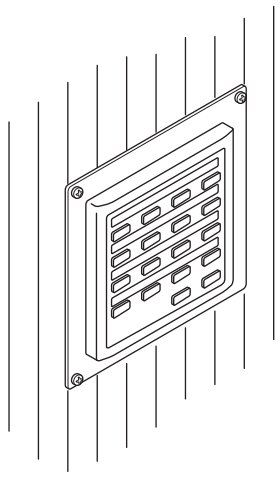

b): Flush mounting

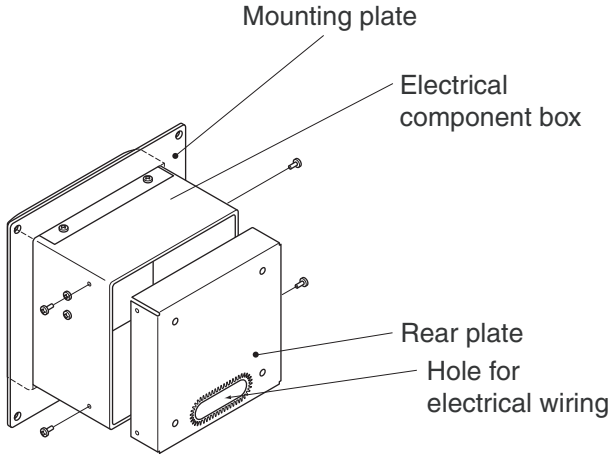

Fig. 3-74

1. Decide how the ON/OFF controller will be mounted: in the normal manner or flush with the wall.
   a) To mount the ON/OFF controller in the normal manner, remove the mounting plate. Then reattach the four screws to the electrical component box.
   b) To mount the ON/OFF controller flush with the wall, make an opening in the wall measuring 128 mm × 128 mm. The opening must be at least 85mm deep as measured from the outside surface of the wall.

2. Remove the rear plate and connect the electrical wiring.
   1) Remove the four screws located on both sides of the rear plate.
   2) Either the hole in the bottom of the electrical component box or the hole in the rear plate may be used to feed the electrical wiring.

3. Secure the ON/OFF controller in place.
   a) If the ON/OFF controller is being mounted in the normal manner, first attach the rear plate to the wall using the screws and Rawl plugs provided. Next, place the body of the ON/OFF controller over the rear plate and secure it in place using four screws.
   b) If the ON/OFF controller is being mounted flush with the wall, fit it through the mounting plate on the wall and secure it in place using the screws and Rawl plugs provided.

NOTE

To mount the ON/OFF controller on a wall made of cinder block, brick, concrete, or a similar material, drill 4.8 mm diameter holes in the wall and insert Rawl plugs to anchor the mounting screws.

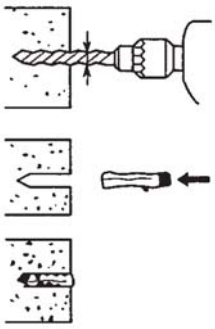

7. ON/OFF Controller (CZ-ANC2)

Layout of electrical terminals

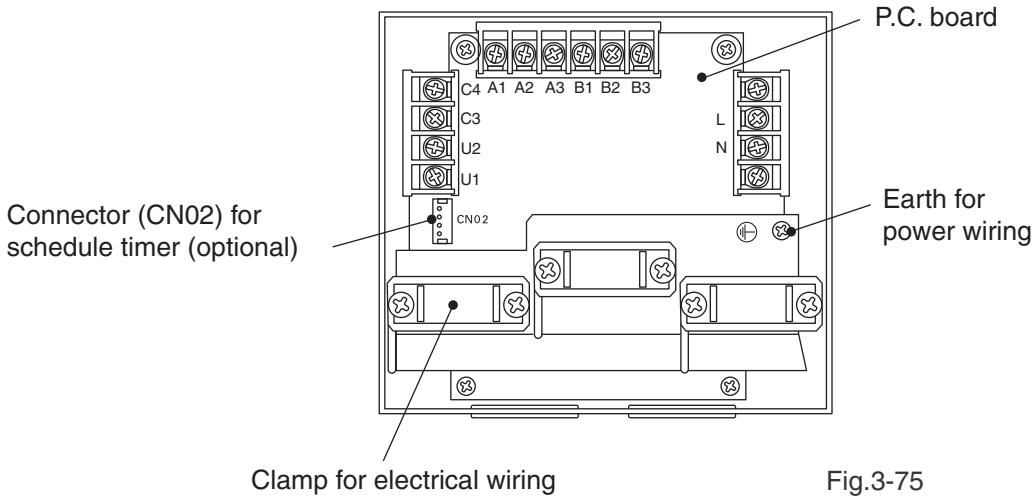

Fig.3-75

How to connect electrical wiring

1) Basic wiring

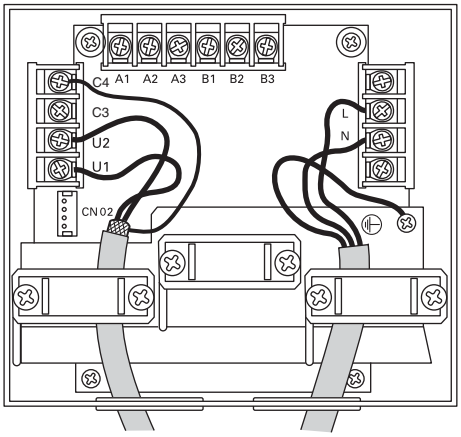

N: ┐ Power supply (220-240 V ∿ 50/60 Hz)
L: ┘

U1: ┐ Inter-unit control wiring. (Low voltage)
U2: ┘ (Use shielded wiring)

C3: Reserve

C4: Earth for inter-unit control wiring

2) Terminals for remote monitoring

A1: Input for turning on air conditioners concurrently.

A2: Input for turning off air conditioners concurrently.

A3: Common input for turning air conditioners on or off.

B1: On operation state indicator output.

B2: Alarm indicator output.

B3: Common indicator output.

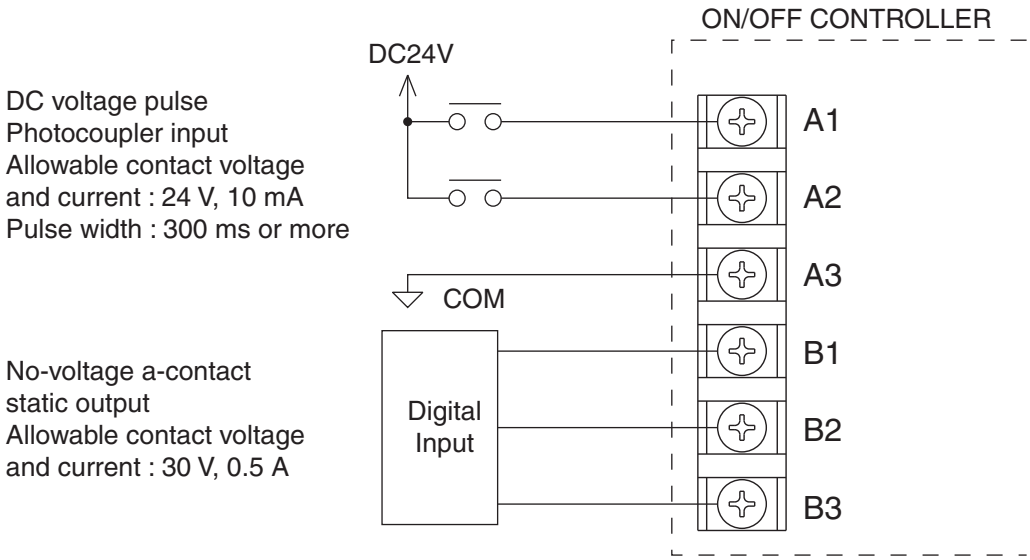

7. ON/OFF Controller (CZ-ANC2)

Basic wiring diagram

CAUTION

Ensure that wiring connections are correct.
(Incorrect wiring will damage the equipment.)

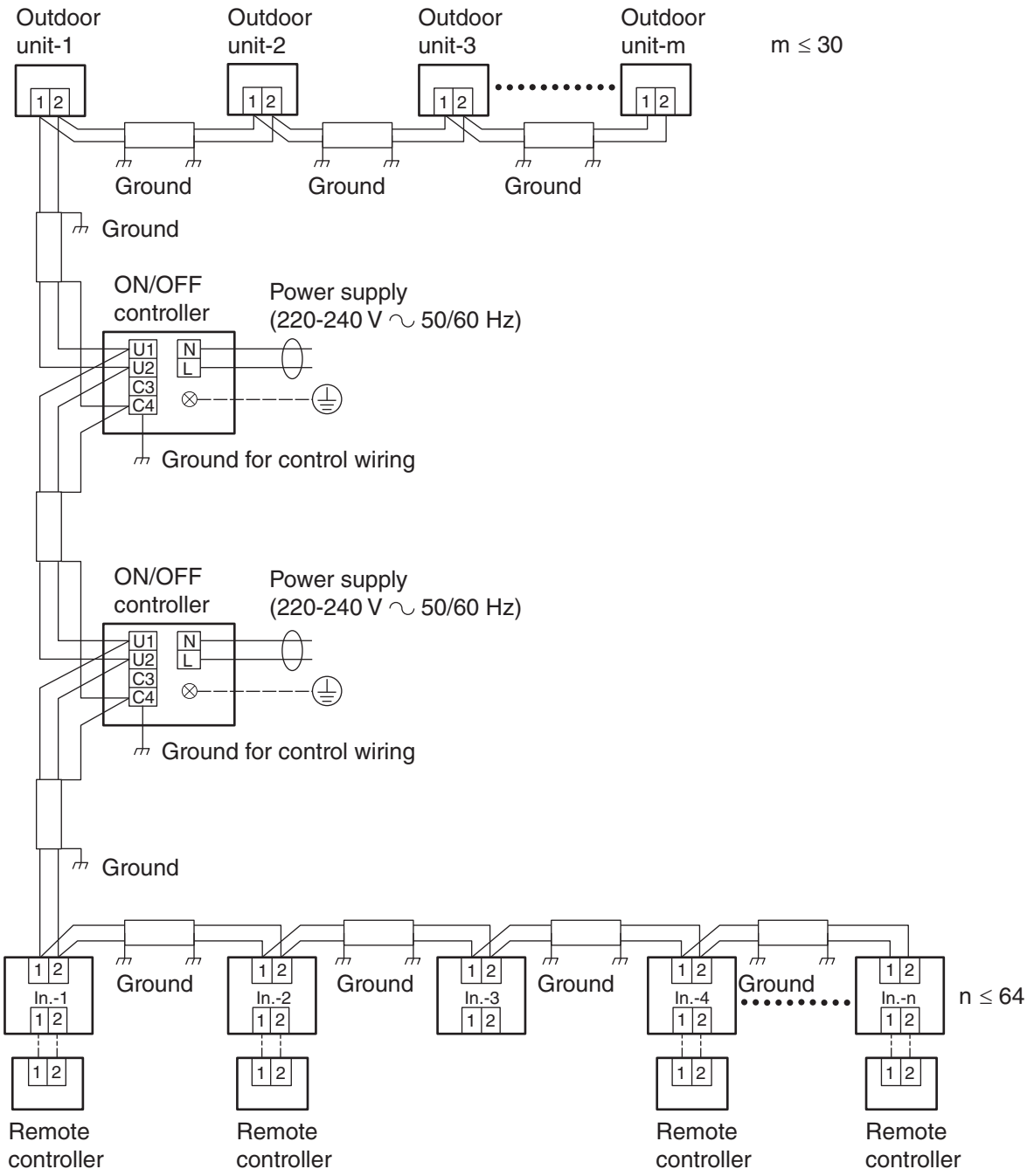

Fig. 3-76

NOTE

1. The following figure is the inter-unit control wiring.

Use the shielded wiring.
2. In. means indoor unit.
3. One ON/OFF controller can connect up to two units – one main unit and one sub unit – for each zone.

7. ON/OFF Controller (CZ-ANC2)

■ Dip switch setting

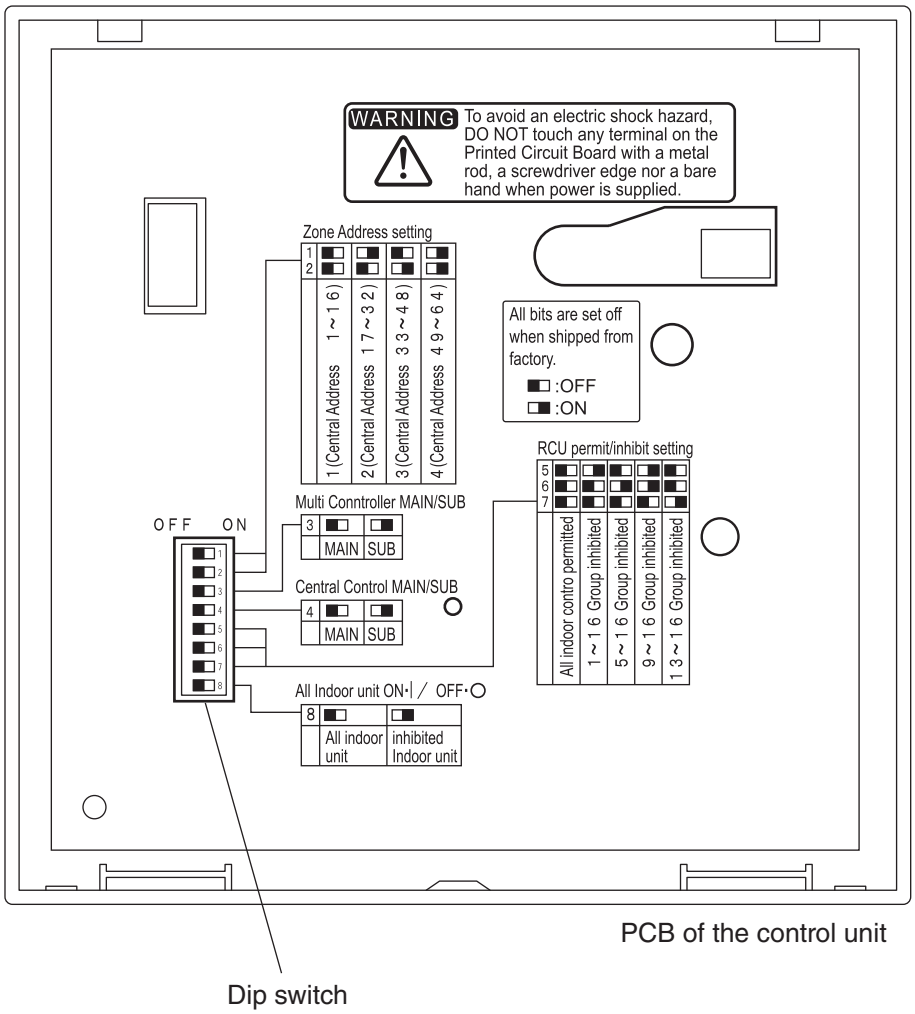

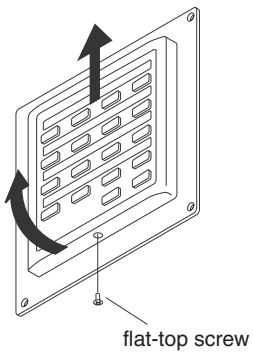

How to reach the P.C. board
Remove the flat-top screw on the bottom of the back case.
Raise the bottom of the control unit, and now remove the unit by sliding it upward.
The P.C. board on the back of the control unit is now visible.

NOTE Do not force the bottom of the control unit open. Doing so may damage the notch at the top and make it impossible to install the control unit.

3

7. ON/OFF Controller (CZ-ANC2)

DIPSW1

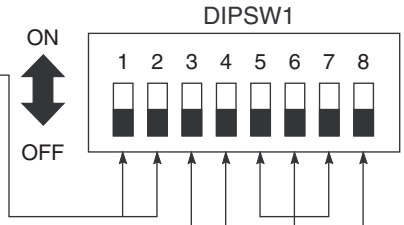

Zone address switches

Use these to set the zone addresses.

	1	2
1(Central Adress 1-16)	OFF	OFF
2(Central Adress 17-32)	ON	OFF
3(Central Adress 33-48)	OFF	ON
4(Central Adress 49-64)	ON	ON

ON/OFF controller main/sub selection switch

This is normally used at the main (OFF) setting.
When the ON/OFF controller is to be used by a main unit and a sub unit (2 units) in one zone, set one unit to main (OFF) and the other unit to sub (ON).

OFF: ON/OFF controller operates as main controller.
ON: ON/OFF controller operates as sub-controller.

NOTE
- Set the zone address switch of the sub ON/OFF controller to the same address as the main ON/OFF controller.
- One ON/OFF controller must always be set as the main ON/OFF controller.

Central control main/sub selection switch
(OFF: main, ON: sub)

This is normally used at the main (OFF) setting.
Set it to sub (ON) when a communication adapter, intelligent controller or system controller is to be used concurrently.

Group inhibited/all indoor unit control permitted selection switch

Use these to switch between the group inhibited and all indoor unit control permitted statuses for each of the four groups.

	5	6	7
All indoor unit control permitted	OFF	OFF	OFF
1-16 Group inhibited	ON	OFF	OFF
5-16 Group inhibited	OFF	ON	OFF
9-16 Group inhibited	ON	ON	OFF
13-16 Group inhibited	OFF	OFF	ON

All indoor run/stop selection switch

Use this to select the units to be run or stopped when the ALL ON. or ALL OFF.O button has been pressed.

OFF : All indoor unit
ON: inhibited indoor unit

Fig. 3-77

* All switches are OFF position at shipment.

3

7. ON/OFF Controller (CZ-ANC2)

■ Zone address setting

The zone addresses must be set (using #1 and #2 of DIPSW1) when the ON/OFF controllers are to be controlled in a multiple number of zones.

- Set to zone 1 when the ON/OFF controller is to be used in one zone only.
- When the ON/OFF controllers are to be used in a multiple number of zones, one of them must be set to zone 1 without fail.

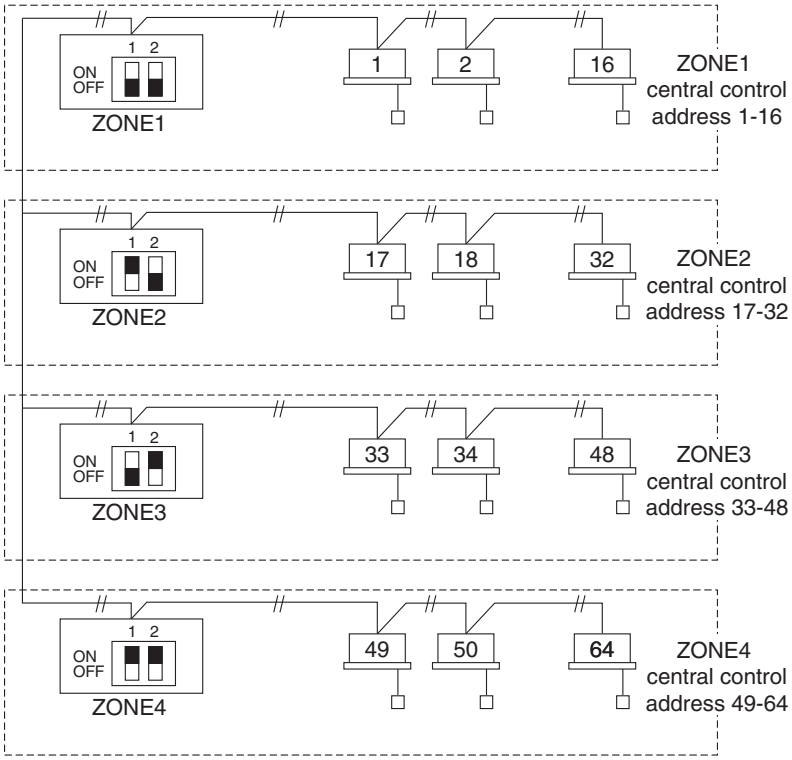

Fig. 3-78

3

7. ON/OFF Controller (CZ-ANC2)

■ How to perform zone registration

To operate the ON/OFF controller properly, zone registration is required after finishing the test run (and after setting all indoor unit addresses)using one of the following methods.

(a) Zone registration using the remote controller
Refer to page 3-126

(b) Zone registration using the system controller
Refer to page 3-127

(c) Automatic zone registration using the system controller
Refer to page 3-128

For methods (a) and (b), you should make a zone registration table manually before performing the registration as shown on the page 3-120.

For method (c), zone registration is executed automatically, proceeding from small indoor unit address and small central addresses to larger numbers in numerical order. For example:

Central address	1	2	3	4	5	6	
ZONE-group	1-1	1-2	1-3	1-4	1-5	1-6	
Indoor unit address	1-1	1-2	2-1	2-2	2-3	3-1	

3

NOTE

1. An indoor unit address is assigned to each indoor unit during automatic address operation. Each indoor unit address combines an R.C. address and indoor unit number as follows:

   1 — 1 : Indoor unit address (UNIT No.)
   Indoor unit No.
   Refrigerant circuit No. (R.C. address)

   This address is displayed on remote controller for UNIT No. when the UNIT button is pressed.

2. The central address represents the zone and group number. These addressed are assigned in ascending numerical order.

7. ON/OFF Controller (CZ-ANC2)

ZONE registration table

ZONE	GROUP	Central address	Indoor unit address (UNIT No.)	Unit location	ZONE	GROUP	Central address	Indoor unit address (UNIT No.)	Unit location
1 (1 2 ON OFF DIPSW)	1	1			3 (1 2 ON OFF DIPSW)	1	33		
	2	2				2	34		
	3	3				3	35		
	4	4				4	36		
	5	5				5	37		
	6	6				6	38		
	7	7				7	39		
	8	8				8	40		
	9	9				9	41		
	10	10				10	42		
	11	11				11	43		
	12	12				12	44		
	13	13				13	45		
	14	14				14	46		
	15	15				15	47		
	16	16				16	48		
2 (1 2 ON OFF DIPSW)	1	17			4 (1 2 ON OFF DIPSW)	1	49		
	2	18				2	50		
	3	19				3	51		
	4	20				4	52		
	5	21				5	53		
	6	22				6	54		
	7	23				7	55		
	8	24				8	56		
	9	25				9	57		
	10	26				10	58		
	11	27				11	59		
	12	28				12	60		
	13	29				13	61		
	14	30				14	62		
	15	31				15	63		
	16	32				16	64		

NOTE

1. Assign indoor unit addresses to the desired positions (central addresses) manually.
2. For group control, only the main indoor unit should be assigned. Sub indoor units cannot be assigned.

7. ON/OFF Controller (CZ-ANC2)

(a) Zone registration using the remote controller
(Determination of central address)

- In this case, after confirming which indoor unit is connected to the remote controller and that the air conditioner in the OFF state, you set the central addresses one at a time.
- If the system has no remote controller, connect a remote controller to the system temporarily. Then follow this procedure.

NOTE

The indoor unit address must already have been set before performing zone registration. If necessary, refer to the Installation Manual supplied with the outdoor unit.

(1) Press the [ ] and [ ] buttons at the same time of the remote controller for more than 4 seconds.

(2) Do not press [UNIT] button.

(3) Once in this mode, the UNIT No., CODE No., No. of SET DATA and SETTING indications will flash on the display as shown Fig. 3-79.

NOTE

In case of group control "ALL" instead of "UNIT No." will flash on the display. Select the main indoor unit address by pressing the [UNIT] button once.

(4) Set CODE No. to 03 using the [▲] and [▼] ( ) buttons.

NOTE

CODE No. 03 must be selected to perform zone registration using the remote controller.

(5) Set the Central address which you want to assign to the indoor unit address using the [▲] and [▼] ( ) buttons according to the zone registration table.

(6) Press the [SET] button. The CODE No. and Central address changes from flashing to ON state. If you make a mistake, then press the [CANCEL] button and reset the central address.

(7) Press the [ ] button to finish zone registration.

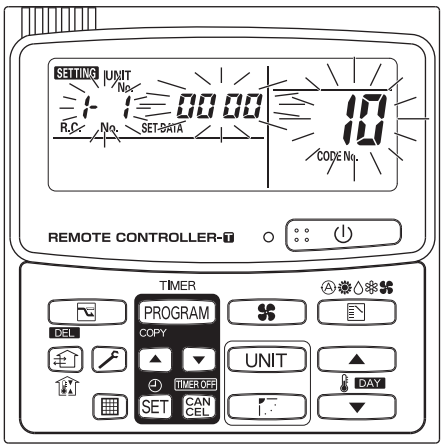

Fig. 3-79

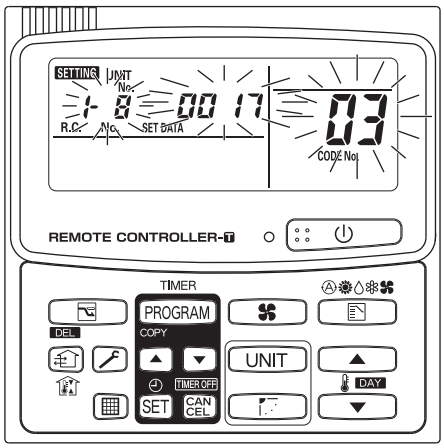

For example, in this case
Indoor unit address: 1-8
Central address : 17 (ZONE 2, GROUP 1)

Fig. 3-80

7. ON/OFF Controller (CZ-ANC2)

(b) Zone registration using the system controller

- In this case, you set all Central addresses by system controller at once manually.

(1) Press the [🔧] and [ZONE] buttons at the same time for more than 4 seconds.
SETTING and CODE No. C1 will flash.

(2) After confirming that CODE No. C1 is displayed, press the [SET] button. Once in this mode, a change takes place as Fig. 3-81.

(3) Select the zone and group No. which you want to set with [ZONE] and [◀] [▶] (GROUP) buttons.
If already set, press the [CL] buttons.

(4) Set the unit No. (Indoor unit address) with [📠] and [⊡] buttons, according to the zone registration table.

R.C. No.. ..... [📠] button

Indoor unit No.. ..... [⊡] button

(5) Press the [SET] button.
GROUP No. turns ON and UNIT No. (Indoor unit address) changes from flashing to ON state. UNIT No. is registered to selected ZONE No. and GROUP No.
If you make mistake, then press the [CL] button and reselect the ZONE, GROUP and UNIT No.

(6) Register the other UNIT No. in the same way by following the steps (3) to (5).

(7) Finally, complete the registration by pressing the [🔧] button.
SETTING flashes for a few minutes, then OFF.

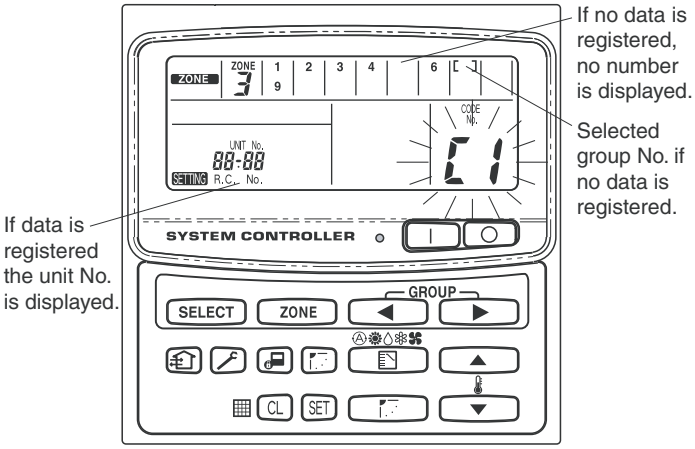

Fig. 3-81

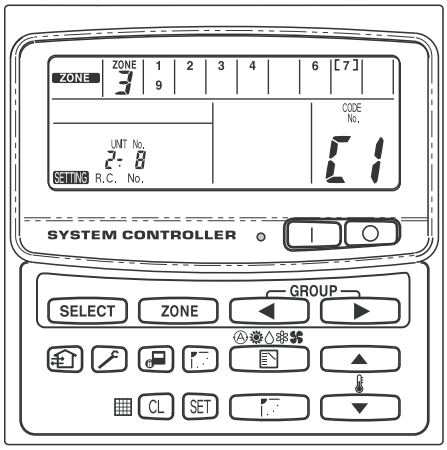

For example, in the case at left
Zone 3, group No. 7
Unit No. (indoor unit address) 2-8

Unit No. 2-8 is registered to zone 3-group 7.

Fig. 3-82

3

7. ON/OFF Controller (CZ-ANC2)

(c) Automatic zone registration using the system controller

(1) Press the [ ] and [ZONE] buttons at the same time for more than 4 seconds.
SETTING and CODE No. C1 will flash.

(2) Select CODE. No. C2 by pressing [▲] and [▼] ( ) button and press the [SET] button.
C2 changes from flashing to ON state and automatic zone registration will start.

(3) Registered GROUP No. will be disappeared all.

(4) Central address will be assigned from small indoor unit address to large one in numerical order automatically.
Finishing automatic zone registration, SETTING changes from flashing to OFF.

(5) If the error is happened, the “CHECK” starts flashing and zone registration finishes at this time. Press the [CL] button.

(6) Finally, complete automatic zone registration mode by pressing the [ ] button.
SETTING flashes for a few minutes, then OFF.

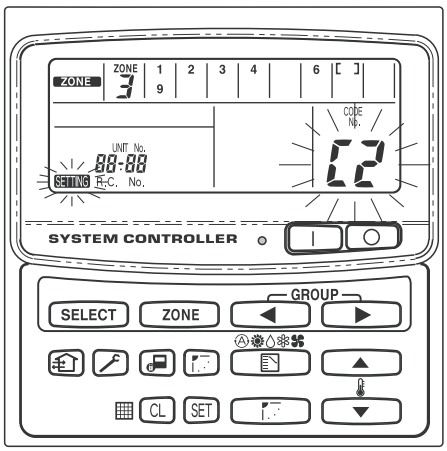

Fig. 3-83

3

7. ON/OFF Controller (CZ-ANC2)

■ How to check overlapping of central address no.

(1) Press the [🔧] and [ZONE] buttons at the same time for more than 4 seconds.
SETTING and CODE No. C1 will flash.

(2) Select CODE No. C3 by pressing [▲], [▼] ([🌡]) button and press the [SET] button.
C3 changes from flashing to ON state and SETTING will flash. Then auto overlap checking will start.

(3) If C3 changes from ON to flashing and SETTING stops flashing and disappears, there is no overlapping.
Then finally, complete the auto overlap checking mode by pressing the [🔧] button.

(4) If some of GROUP No., ZONE No. and UNIT No. flash, you should try again the zone registration.

① Select CODE No. C1 by pressing [▲], [▼] ([🌡]) button and press the [SET] button.

② Select the flashing GROUP No. with ZONE and GROUP button. Then press the [CL] button and reselect the ZONE, GROUP and UNIT No.

③ Then finally, complete the auto overlap checking mode by pressing the [🔧] button.

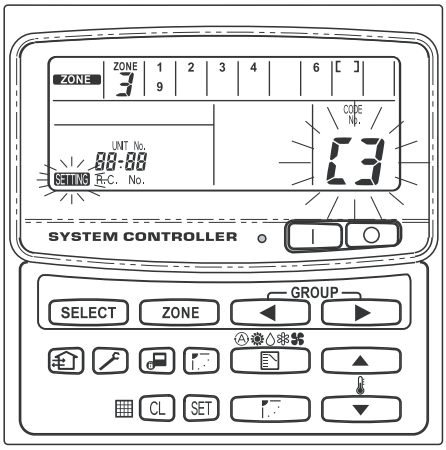

Fig. 3-84

3

7. ON/OFF Controller (CZ-ANC2)

■ System examples

The following diagrams show system examples and the correct setting of the switches on the PCB.

(1) For a system without link

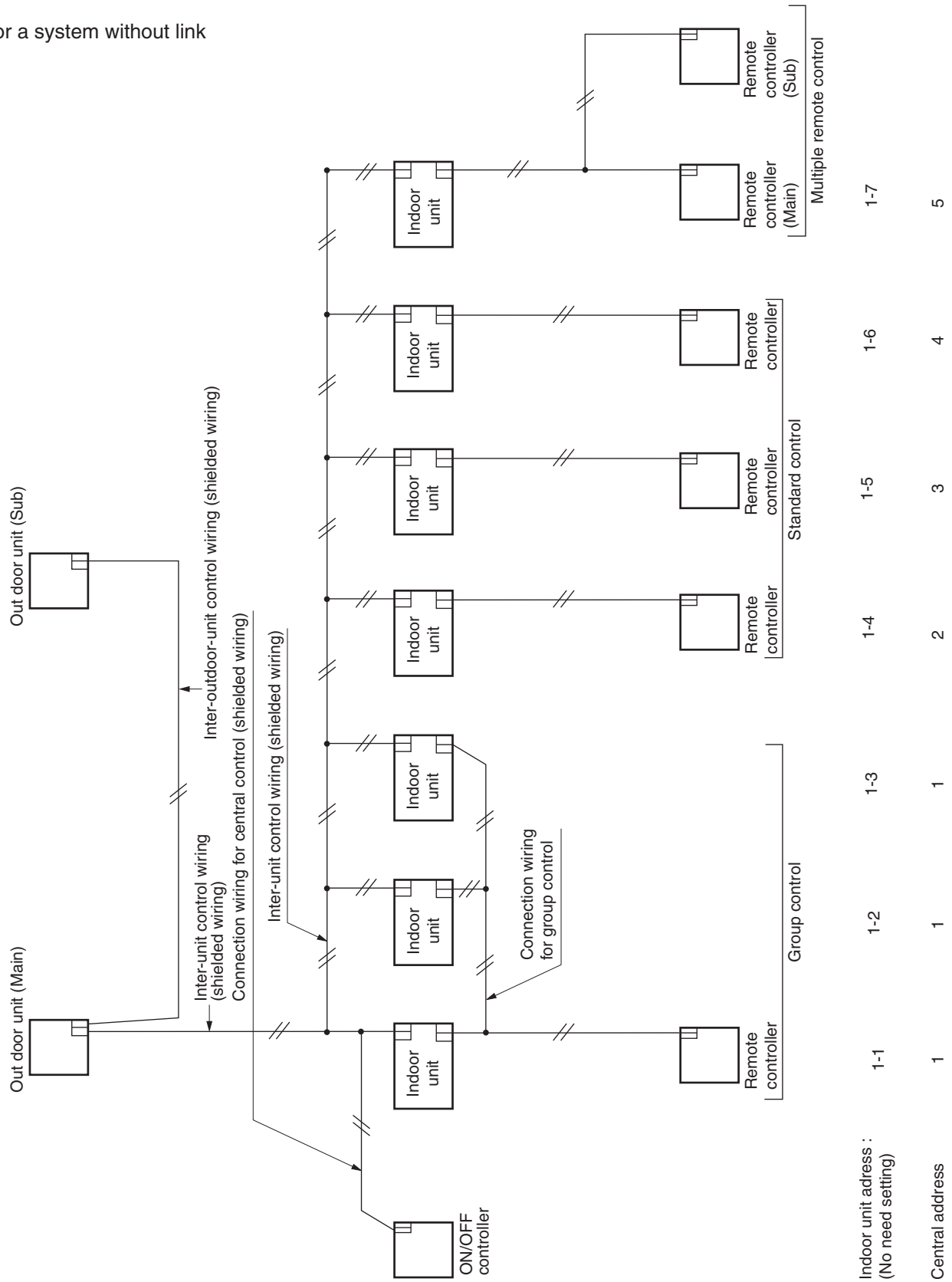

7. ON/OFF Controller (CZ-ANC2)

(2) For a system with link

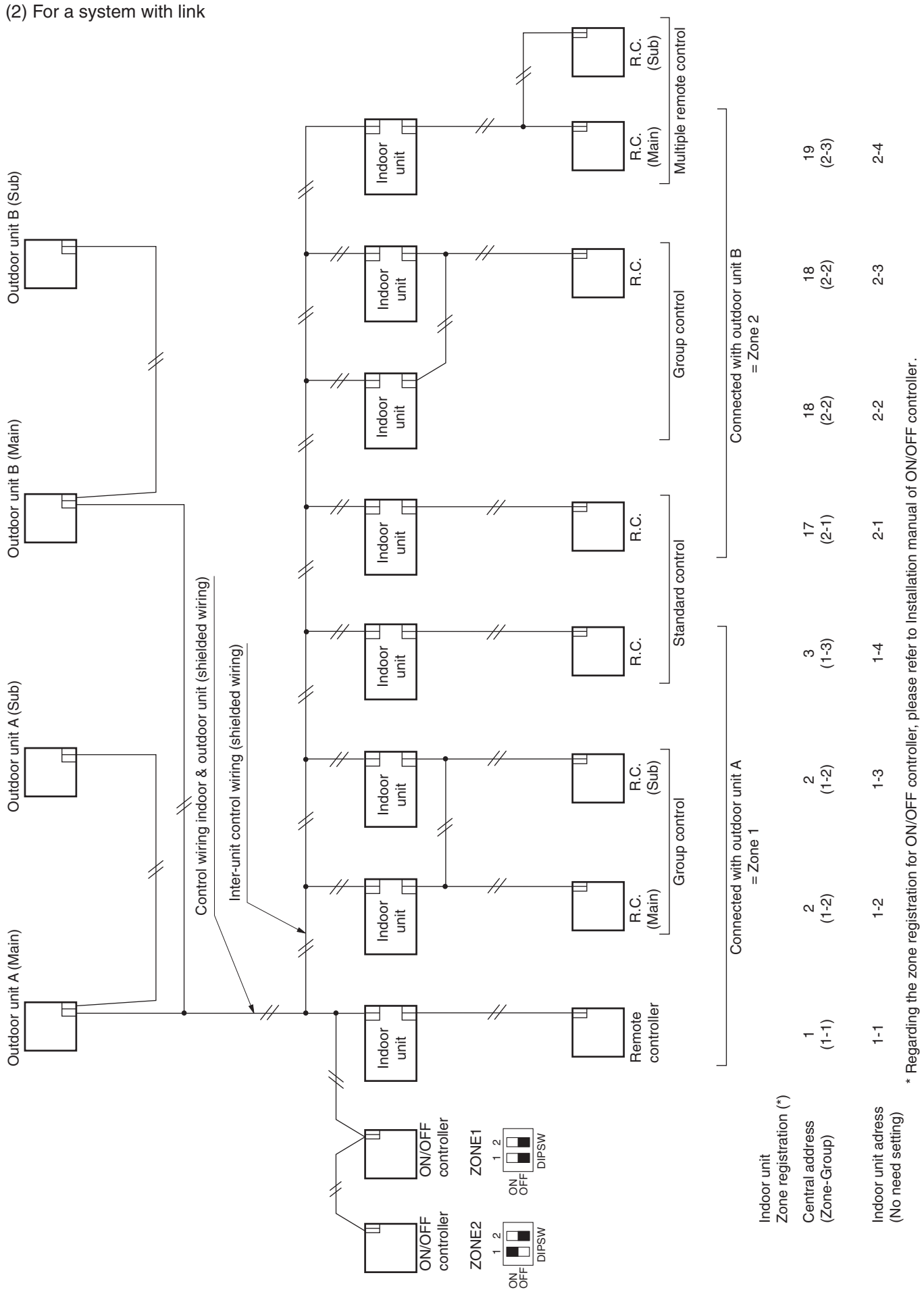

Centralized Control System

CZ-256ESMC2

INTELLIGENT CONTROLLER

Operation Manual

Centralized Control System CZ-256ESMC2 Operation Manual

INTELLIGENT CONTROLLER

Thank you for choosing the CZ-256ESMC2 Intelligent Controller.
Before using the system, be sure to read this manual carefully. In particular, be sure to read the "Important Safety Instructions".
After reading this manual, store it in a convenient place.

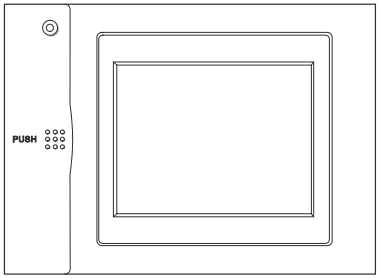

Contents

1 Important Safety Instructions 4
2 Features of the System..... 8
3 System Configuration..... 9
4 Names and Functions of Parts..... 10
5 Quick Reference 13
6 Using the System..... 15
7 Entering Text and Numbers 76
8 Connection of External Signals..... 79
9 TERMS 82
10 Calculating air conditioner distribution..... 83
11 Supplementary Information-1..... 87
12 Supplementary Information-2..... 88
13 Troubleshooting 91
14 Maintenance 93
15 Specifications..... 94
16 Installation (Electric) and Service Instructions..... 96

Contents

1 Important Safety Instructions **4**
2 Features of the System **8**
3 System Configuration **9**
4 Names and Functions of Parts **10**
5 Quick Reference **13**
6 Using the System **15**
6.1 Powering the System On 15
6.2 Names and Functions of Screen Parts 15
6.2.1 Initial communications screen 15
6.2.2 Operating screen example 16
6.3 Initial Settings 18
6.3.1 System setting flow 19
6.3.2 Setting the date, cut-off date, and distribution ratio calculation method ..... 22 — Main 5 Sub 1
6.3.3 Setting central addresses, unit names and tenant numbers ..... 24 — Main 5 Sub 2
6.3.4 Setting tenant names and distribution groups ..... 26 — Main 5 Sub 3
6.3.5 Making pulse meter settings ..... 28 — Main 5 Sub 4
6.3.6 Clear accumulation data ..... 30 — Main 5 Sub 5
6.4 Status Monitoring and Operation Screens 31
6.4.1 Displaying general information by tenant ..... 31 — Main 1 Sub 1
6.4.1.1 Operating units individually 32
6.4.1.2 Operating all units by tenant 33
6.4.1.3 Operating all connected units 34
6.4.2 Displaying detailed information by tenant ..... 35 — Main 1 Sub 2
6.4.3 Displaying general information by zone ..... 36 — Main 1 Sub 3
6.4.4 Displaying detailed information by zone ..... 37 — Main 1 Sub 4
6.4.5 Displaying and operating all indoor units ..... 38 — Main 1 Sub 5
6.5 Total Data and Manual Cut-Off Processing 39
6.5.1 Displaying total data by indoor unit ..... 39 — Main 2 Sub 1
6.5.2 Displaying total data by tenant ..... 40 — Main 2 Sub 2
6.5.3 Displaying total data by outdoor unit ..... 41 — Main 2 Sub 3
6.5.4 Displaying pulse meter total data ..... 42 — Main 2 Sub 4
6.5.5 Performing manual cut-off processing and saving data ..... 43 — Main 2 Sub 5
6.5.5.1 Manual cut-off processing 43
6.5.5.2 Saving data 44
6.5.5.3 Outputting distribution data in progress 44
6.5.5.4 Restoring data 45
6.6 Air Conditioning Distribution Ratios and Energy Usage 46
6.6.1 Displaying distribution ratios and energy usage by indoor unit ..... 46 — Main 3 Sub 1
6.6.2 Displaying distribution ratios and energy usage by tenant ..... 47 — Main 3 Sub 2
6.6.3 Time zone totals and distribution 48
6.7 Maintenance and Test Runs 49
6.7.1 Checking inspection signs ..... 49 — Main 4 Sub 1
6.7.2 Checking the alarm logs ..... 50 — Main 4 Sub 2
6.7.3 Executing test runs ..... 52 — Main 4 Sub 3

Main 5 Sub 1 refers to the explanation of main menu 5, sub menu 1.

6.8 Auxiliary Settings 53
6.8.1 Registering zone names ..... 53 — Main 6 Sub 1
6.8.2 Setting zone numbers and management targets ..... 54 — Main 6 Sub 2
6.8.3 Programming timers ..... 56 — Main 6 Sub 3
6.8.3.1 Programming daily timers 56
6.8.3.2 Programming weekly timers 59
6.8.4 Setting Tenant holiday/Timer special day ..... 60 — Main 6 Sub 4
6.8.5 Prohibiting remote control use ..... 61 — Main 6 Sub 5
6.8.6 Setting distribution time zones ..... 62 — Main 6 Sub 6
6.8.7 Setting special distribution days ..... 63 — Main 6 Sub 7
6.8.8 Indoor unit settings ..... 64 — Main 6 Sub 8
6.8.9 Other settings ..... 65 — Main 6 Sub 9
6.8.9.1 Checking the connection configuration 65
6.8.9.2 Registering passwords 66
6.8.9.3 Selecting no-communications mode 66
6.8.9.4 Buzzer sounds 66
6.8.9.5 Initialization 66
6.8.9.6 LCD auto off settings 67
6.8.9.7 Calibrating touch panels 67
6.8.9.8 Power off button 68
6.8.10 WEB settings ..... 69 — Main 6 Sub 10
6.8.10.1 Detailed server settings 70
6.8.10.1.1 Receiving server settings 71
6.8.11 User settings ..... 72 — Main 6 Sub 11
6.9 System Configuration Changes 74
6.9.1 When a system configuration change detected 74
6.9.2 When system configuration may change 75
7 Entering Text and Numbers **76**
7.1 Entering Numbers 76
7.2 Entering Text 77
8 Connection of External Signals **79**
8.1 Pulse Meter Input 79
8.2 All Stop Input 80
8.3 All Start Input 80
8.4 All-Unit Alarm Output 81
8.5 All-Unit Operation Output 81
9 TERMS **82**
10 Calculating air conditioner distribution **83**
10.1 Calculating simple distribution 83
10.2 Calculating air conditioner energy usage 85
10.3 Calculating loaded distribution 86
11 Supplementary Information-1 ..... **87**
12 Supplementary Information-2 ..... **88**
13 Troubleshooting **91**
14 Maintenance **93**
15 Specifications **94**
16 Installation (Electric) and Service Instructions **96**

1 Important Safety Instructions

Before using the system, be sure to read these "Important Safety Instructions".

The precautions given in this manual consist of specific "⚠ Warnings" and "⚠ Cautions". They provide important safety related information and are important for your safety, the safety of others, and trouble-free operation of the system. Be sure to strictly observe all safety procedures.

- The labels and their meanings are as described below.

⚠Warning	This refers to a hazard or unsafe procedure or practice which can result in severe personal injury or death.
⚠Caution	This refers to a hazard or unsafe procedure or practice which can result in personal injury or product or property damage.

- Meaning of symbols

⚠	Indicates "Warning" or "Caution".
⃠	Indicates "Prohibited".
❗	Indicates an action that should always be performed.

- After reading this manual, save it in a convenient place.
  Be sure to provide this manual to any person who may use the product.

Installation Precautions

⚠ Warning

Do not install yourself

Installation should always be performed by your dealer or a professional service provider. Electric shock or fire may result if an inexperienced person performs any installation or wiring procedures incorrectly.

Use only specified air conditioners

Always use only air conditions specified by dealer.

Electrical work must be carried out by qualified personnel

Contact your dealer for installation. Do not attempt to install the product yourself.

Location

⚠ Caution

Do not install in damp locations or locations subject to vibrations

Damage to the product can result.

Do not install under direct sunlight or in places near heat sources

The product may be damaged.

Do not install near sources of noise

Malfunctions can result.

Elevators,
Automatic doors,
Industrial machinery,
etc

Avoid static electricity during cabling work

Before starting cabling work, touch ground to discharge static electricity from the body.

Avoid installation in the following locations

- Locations subject to inflammable gas leakage
- Near beaches or other places with a large amount of salt
- Hot springs or other locations subject to sulfuric gas
- Locations near water and oil (including industrial lubricants), and water and oil sprays
- Locations with large changes in voltage
- Near machines generating electromagnetic waves
- Locations close to organic solvents

Keep televisions, radios, PCs, etc, at least 1m away from the central controller, indoor units, and remote controls

Picture breakup and noise can occur.

Do not use heaters near the Intelligent Controller

Plastic parts of the Intelligent Controller may be deformed or discolored.

Precautions for Use

⚠ Warning

Do not touch switches with wet hands

Electric shock and damage to the system can result.

Prohibited

Protect the Intelligent Controller from water

Damage to the system can result.

Prohibited

Stop the system and turn the power off if you sense unusual smells or other irregularities

Continuing operation when the system is out of order can result in electric shock, fire, and damage to the system.
Contact your dealer

Turn off the power.

⚠ Caution

Do not drop the system or subject it to strong shocks

Damage to the system can result.

Prohibited

Use only fuses with the correct capacity

Use of pins or copper wire can result in fire and damage to the system.

Prohibited

Use only the specified power source

Use of any other power source can result in fire and damage to the system.Use single-phase 100-240V power.

⚠ Caution

Use the special supplied touch pen

Touching the touch panel with any pen other than the supplied touch pen can damage the system.

Prohibited

Moving and Repair Precautions

⚠ Warning

Do not disassemble or repair

Never disassemble or repair the system yourself. Contact your dealer for repair. Electric shock or fire may result if an inexperienced person attempts to repair the system.

Prohibited

Contact your dealer before moving the system

Contact your dealer or a professional service provider about moving and reinstalling the system. Electric shock or fire may result if an inexperienced person performs any installation procedures incorrectly.

Do not touch the LCD if it is leaking

If the touch panel is damaged, the liquid crystal from inside the display may leak out. Do not ingest the liquid or allow it to contact your skin.

If accidental contact with skin occurs, rinse the area of contact thoroughly under running water for at least 15 minutes.

If accidental swallowing occurs, rinse the inside of your mouth thoroughly with water. Drink plenty of water and induce vomiting, and then seek immediate medical attention.

Prohibited

2 Features of the System

The Intelligent Controller is a centralized air conditioning management system dedicated to PAC and GHP for small and medium sized buildings.

- Number of connectable units ····· • By connecting communication adaptors to one Intelligent Controller, up to 256 indoor units can be connected.
  • Up to 120 outdoor units can be connected.
- Display····· • Touch panel type 6.5-inch TFT color (640x480 pixel VGA) LCD display
- Operation functions ····· • Start and stop, temperature settings, operation mode selection, fan speed settings, fan direction settings, ventilation etc.
- Operating monitoring ····· • All unit monitoring of operation status (operating/stopped, operation mode, alarms)
  • Display of alarm logs
  • One-operation checking of all filter cleaning signs and engine oil inspection signs
  • External output of all errors, external output of all operations (relay connections)
- Program timers ····· • Up to 50 types of weekly timers can be programmed by combining 50 types of daily timers (50 times per day).
- Air conditioning energy distribution ····· • Recording and display of accumulated operating time and total number of operations for each indoor unit.
  • Calculation of gas and electricity distribution ratios and energy amounts used (m^3, kWh) for each indoor unit and each tenant.
  • Distributions are available in two modes: the "simple distribution" calculated based on the operating time and "loaded distribution" calculated based on the actual air conditioning capacity, respectively. (In order to make operation in the "Loaded distribution" mode, the air conditioner side needs to be adaptable to the "Loaded distribution".
  • Distribution by time zones (regular hours, out of hours, special days).
  • Recording of up to past 24 months of cut-off data.

Terms and abbreviations used in this manual and in the system software

Full term	Abbreviation
Adaptor address	Adaptor
Link system address	Link system
Outdoor unit system address	Outdoor unit system, Outdoor unit, Outdoor system, Outdoor, O/D
Indoor unit address	Indoor unit, Indoor, I/D
Distribution group number	Distribution group No., Distribution group
Tenant number	Tenant No., Tenant
Zone number	Zone No., Zone
Unit name	Unit
Air conditioning distribution ratio	Distribution ratio, Distr. ratio
Central control address	Central address, CNTR
Thermostat	T/S

* For more information about terms, see "9 Terms".

3 System Configuration

System Configuration Example

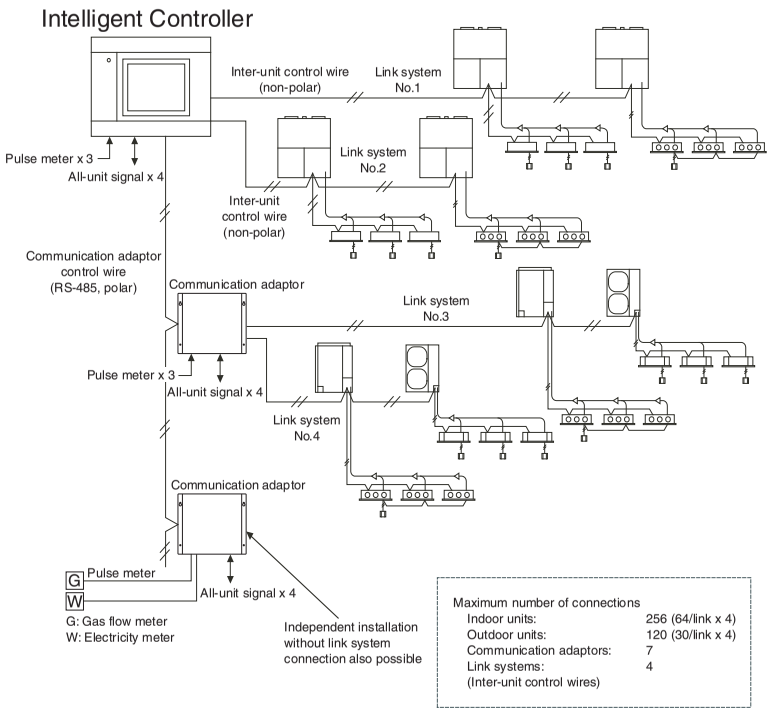

* When connecting link systems (Inter-unit control wires), always connect beginning with LINK1 and LINK2 on the Intelligent Controller. Up to 4 link systems can be connected.

8. Intelligent Controller (CZ-256ESMC2)

4 Names and Functions of Parts

● Front Panel

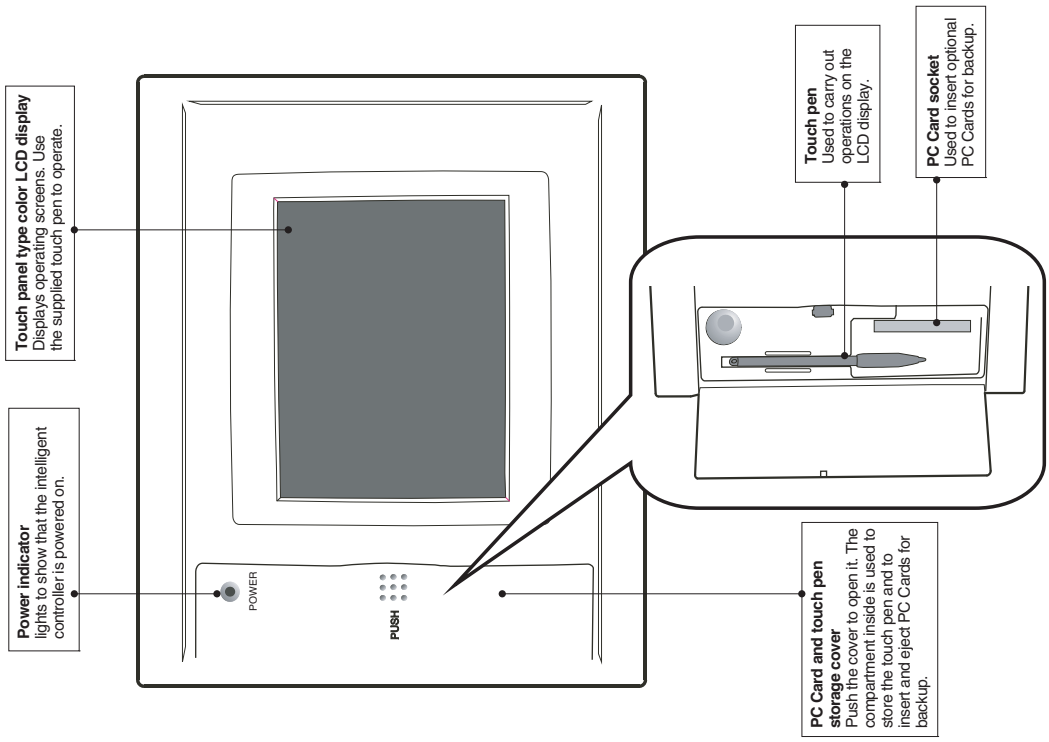

10

4 Names and Functions of Parts

● Rear Panel

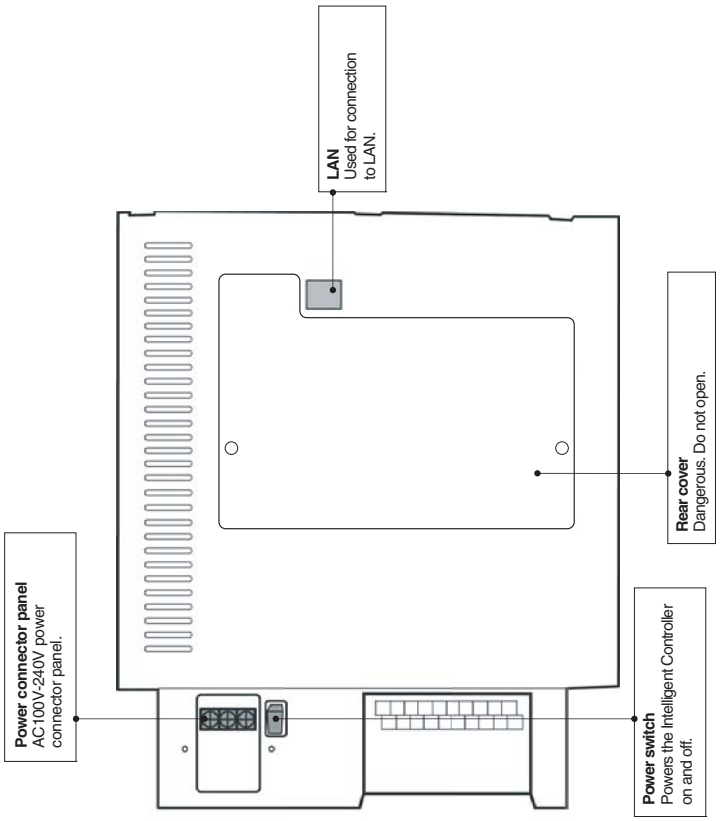

11

3

4 Names and Functions of Parts

● Right side panel

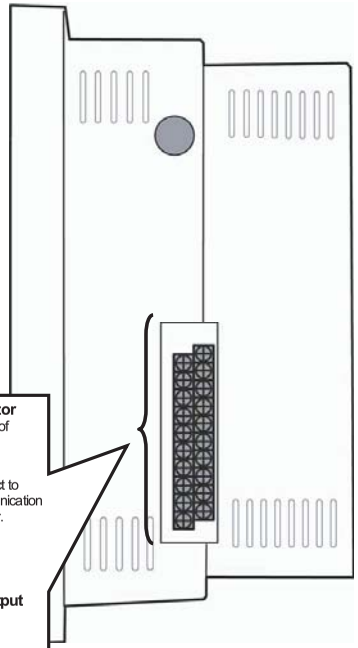

Communications connector panel

LINK1 Inter-unit control wire 1 (LINK1-U2)	U1	0	10	Ground connector: Connect shield line of RS-485.
	U2	1	11	ADAPT (RS-485): Connect to communication adaptor. (+)
		2	12	(−)
LINK2 Inter-unit control wire 2 (LINK2-U2)	U1	3	13	DO-COMM
	U2	4	14	DO 1 — All alarm output
		5	15	DO 2 — All operation output
*1 P-COMM Pulse meter input		6	16	DI-COMM
Gas flow meter (Fuel flow meter)	P1	7	17	DI 1 — All stop input
Electricity meter 1	P2	8	18	DI 2 — All start input
Electricity meter 2	P3	9	19	DI 3 — Spare input

*1 Factory default setting (alterable)

5 Quick Reference

Menu List

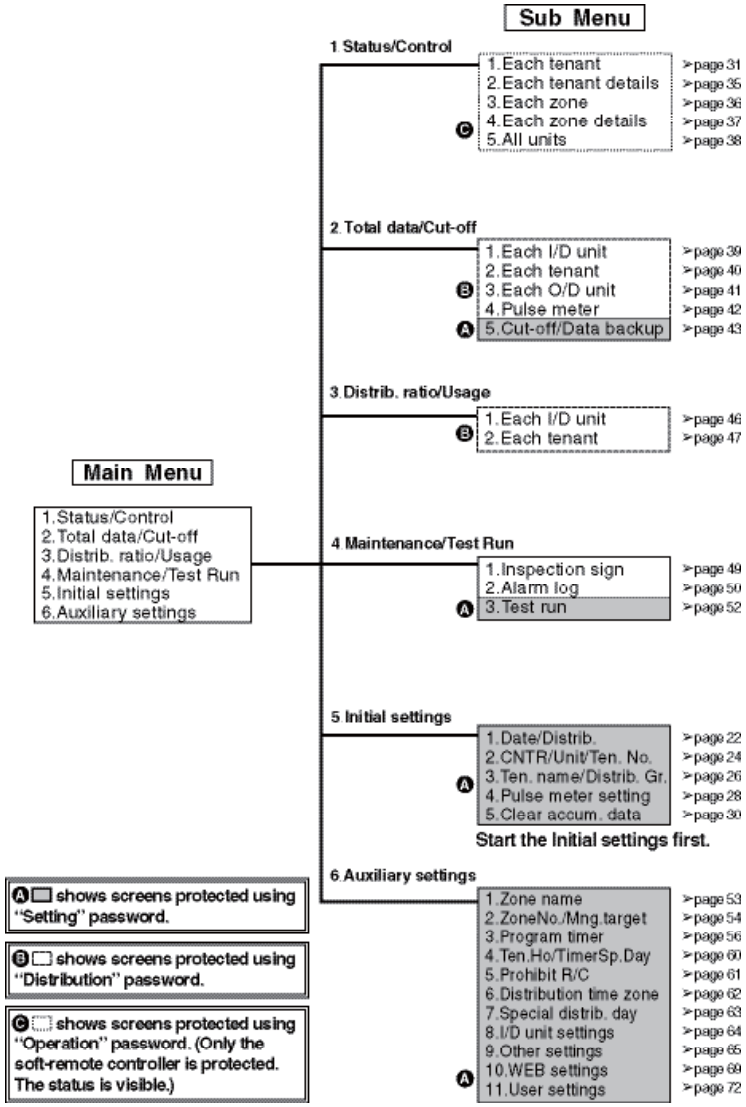

5 Quick Reference

Menu List

Listed are only typical functions.

How to operate air conditioners

Operating all units collectively desired	⇨ 6.4.1.3 Operating all connected units	☞ Page 34
Operating units individually desired	⇨ 6.4.1.1 Operating units individually	☞ Page 32
Operating units by tenant desired	⇨ 6.4.1 Displaying general information by tenant	☞ Page 31
Operating units by zone desired	⇨ 6.4.3 Displaying general information by zone	☞ Page 36
Varying operation modes desired	⇨ 6.4.1.1 Operating units individually	☞ Page 32
Varying setting temperatures desired	⇨ 6.4.1.1 Operating units individually	☞ Page 32
Resetting filter signs desired	⇨ 6.4.1.1 Operating units individually	☞ Page 32
Varying fan direction and speed	⇨ 6.4.1.1 Operating units individually	☞ Page 32
Prohibiting remote controlling desired	⇨ 6.4.1.1 Operating units individually	☞ Page 32

Monitoring status of air conditioner operation

Monitoring status of inspection signs desired	⇨ 6.7.1 Checking inspection signs	☞ Page 49
Monitoring operation status collectively desired	⇨ 6.4.5 Displaying and operating all indoor units	☞ Page 38
Checking the alarm history desired	⇨ 6.7.2 Checking the alarm logs	☞ Page 50
Checking current and past total calculation times desired	⇨ 6.5.1 Displaying total data by indoor unit	☞ Page 39
Checking current and past distribution ratios and energy consumption desired	⇨ 6.6.1 Displaying distribution ratios and energy usage by indoor unit	☞ Page 46

Setting the system

Changing the unit names desired	⇨ 6.3.3 Setting central addresses, unit names and tenant numbers	☞ Page 24
Changing tenant names desired	⇨ 6.3.4 Setting tenant names and distribution groups	☞ Page 26
Changing zone names desired	⇨ 6.8.1 Registering zone names	☞ Page 53
Adjusting dates and times desired	⇨ 6.3.2 Setting the date, cut-off date, and distribution ratio calculation method	☞ Page 22
Changing type of pulse meter (power meter or gas meter)	⇨ 6.3.5 Making pulse meter settings	☞ Page 28
Setting timer operation desired	⇨ 6.8.3 Programming timers	☞ Page 56
Setting security displayed on the screen desired	⇨ 6.8.9.2 Registering passwords	☞ Page 66
Stopping or sounding the buzzer	⇨ 6.8.9.4 Buzzer sounds	☞ Page 66

Others

Backing up PC cards desired	⇨ 6.5.5.4 Restoring data	☞ Page 45
Powering off Intelligent Controllers desired	⇨ 6.8.9.8 Power off button	☞ Page 68
Outputting distribution in progress desired	⇨ 6.5.5.3 Outputting distribution data in progress	☞ Page 44
Calibrating touch panel deviations	⇨ 6.8.9.7 Calibrating touch panels	☞ Page 67

6 Using the System

6.1 Powering the System On

Check the wiring, (air conditioners, communication adaptors, etc.) and then turn the power switch on (see page 12). The system starts automatically.
When the system is powered on for the first time, about 10 minutes are required for the normal system screen to appear. Wait until it appears.

6.2 Names and Functions of Screen Parts

6.2.1 Initial communications screen

The figure below shows the initial communications screen, which appears when the Intelligent Controller starts.

★ System power off procedure ★

Always use the following procedure to power the Intelligent Controller off.

In the "Other settings" menu (Main Sub), select the last item, Power off.

⇩

The message "Exit this program?" appears. Press the OK button.

⇩

The message "It is now safe to turn off the Intelligent Controller." appears (∗). Turn the power off.
(∗ Several minutes may be required before the message appears.)

6 Using the System

6.2.2 Operating screen example

The figure below shows a typical operating screen.

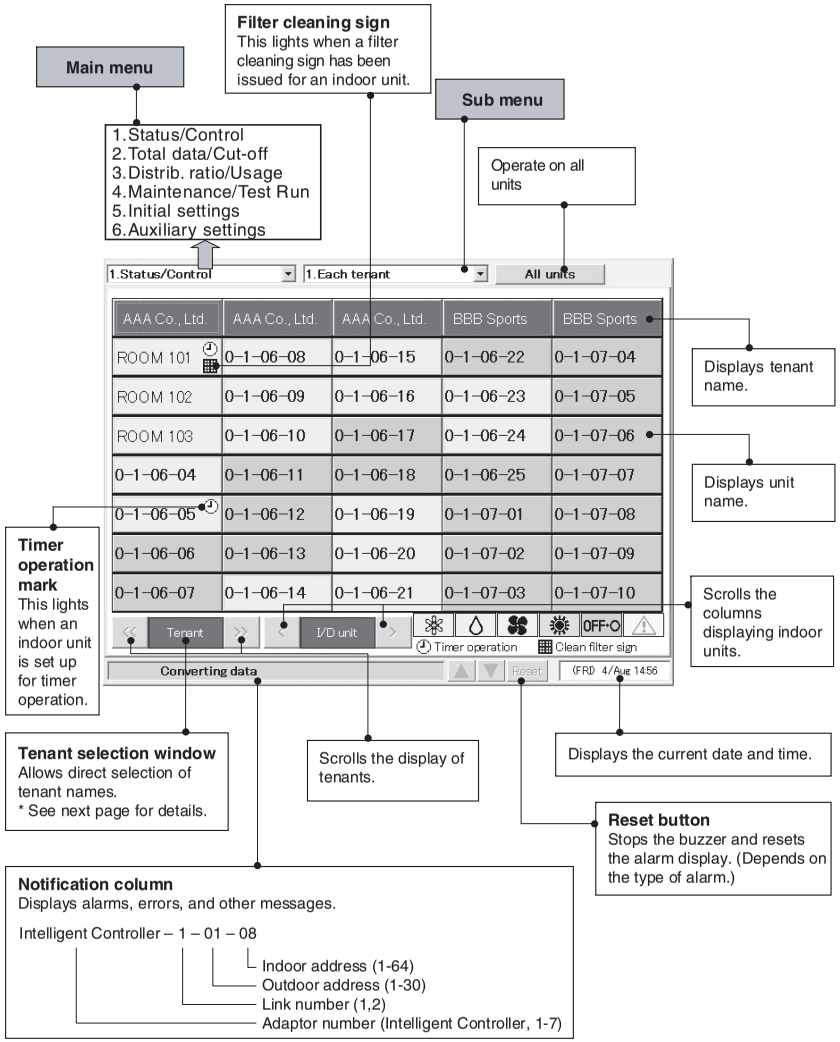

Filter cleaning signs are issued only as approximate guides. We recommend that filters be cleaned regularly, even if no sign has been issued.

6 Using the System

* Selection windows

When you touch [Tenant] (or whatever is displayed in blue between the scroll buttons) shown on the previous page, the items available for selection appear in a list as follows, enabling direct selection.

[Tenant] list

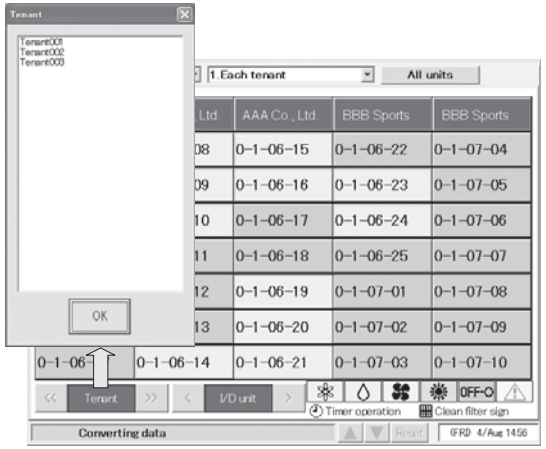

A similar list appears for the other buttons.

[I/D unit] list

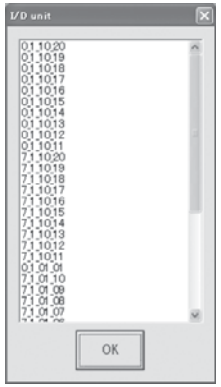

[Weekly timer] list

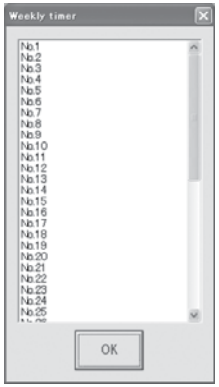

Tenant holiday [Date] list

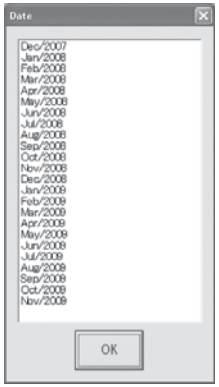

6.3 Initial Settings

The items in the “Initial settings” menu (main menu 5) must be set in order to use the Intelligent Controller. Be sure to set these items.
Before making the settings, read the following and decide what kind of information you want to obtain from the system.

(1) Setting central addresses
Central addresses must be set on the “CNTR/Unit/Ten.No.” screen (Main 5 Sub 2).
Be aware that using them along with the system controller, ON/OFF-controller and so on, may affect zone control classification.

(2) Decide whether or not to use distribution ratios. (See “6.3.2 Setting the date, cut-off date, and distribution ratio calculation method”.)
Question: Do you need to display and record **distribution ratios** for each indoor unit and each tenant?
Yes ⇨ Select “T/S ON+OFF time” or “T/S ON time” as calculation target of power distribution.
No ⇨ Select “No Distrib.” as calculation target of power distribution.

If all you need to do is to monitor air conditioning status, operate the system, and view total data for operating time and so on, you should select “No”. (Information you do not need will not be displayed.)
When you select “No”, the following displays are disabled.
Setting items : Distribution group registration in Main 5 Sub 3.
Display items : Time zones in Main 2 Sub 1 and Main 2 Sub 2.
Menus : Main 3 Sub 1 and Main 3 Sub 2, Main 6 Sub 6, Main 6 Sub 7, and Main 6 Sub 8

(3) If you will be using distribution ratios, decide which **calculation method** to use. (See “6.3.2 Setting the date, cut-off date, and distribution ratio calculation method”.)
Question: Do you need to consider electricity of indoor units?
Yes ⇨ Select “T/S ON+OFF time” as calculation target of power distribution.
No ⇨ Select “T/S ON time” as calculation target of power distribution.

If pulse (electricity) meters are installed for measuring both indoor and outdoor units, select “T/S ON+OFF time”.
If only outdoor units are measured, select “T/S ON time”.

(4) Pulse meter settings (See “6.3.5 Making pulse meter settings”.)
When you need to display air conditioner distribution ratios for (1) above,
Question: Do you require monthly **energy usage** display?
Yes ⇨ Install a pulse meter for each distribution group.
No ⇨ Pulse meter installation is unnecessary.
When pulse meters are not set, “0” is displayed for usage.

> You can remove connected units from management by this system. For details, see “6.8.2 Setting zone numbers and management targets”.

6.3.1 System setting flow

❍: Settings are necessary.
▲: Settings are necessary depending on circumstances.
×: Settings are unnecessary.

Basic settings are completed by setting items of “❍” one by one in accordance with the system management of the customer.
Items of “▲” need to be set only when making necessary settings and maintenance upon customer request regardless of the said management.

	Air conditioner operation only	Displaying distribution ratios (simple distribution)	Displaying distribution ratios (loaded distribution)	Displaying energy usage (simple distribution)	Displaying energy usage (loaded distribution)
START					
↓					
Main 5 Sub 1 Date/Distrib.					
(1) Setting the current date	❍	❍	❍	❍	❍
(2) Setting the cut-off date	▲ *Note 1*	❍	❍	❍	❍
(3) Calculation target of power distribution	×	❍	❍	❍	❍
(4) Setting the energy saving distribution	×	×	▲ *Note 2*	×	▲ *Note 2*
(5) Language	❍	❍	❍	❍	❍
↓					
Main 5 Sub 2 CNTR/Unit/Ten.No.					
(1) Central addresses *Note 8*	❍	❍	❍	❍	❍
(2) Unit name	❍	❍	❍	❍	❍
(3) Tenant No.	▲ *Note 3*	❍	❍	❍	❍
↓					
Main 5 Sub 3 Ten.name/Distrib.Gr.					
(1) Tenant name	▲ *Note 3*	❍	❍	❍	❍
(2) Distribution group	×	❍	❍	❍	❍
Product type	×	▲ *Note 4*	▲ *Note 5*	▲ *Note 4*	▲ *Note 5*
Distribution “Loaded” or “Simple” *Note 14*	×	×	❍	×	❍
↓					
Main 5 Sub 4 Pulse meter setting					
(1) Pulse meter type	×	×	×	▲	▲
(2) Distribution group	×	×	×	❍	❍
(3) Pulse unit value	×	×	×	❍	❍
(4) Ice heat accumulation night power / system selection	×	×	×	×	❍

6 Using the System

		Air conditioner operation only	Displaying distribution ratios (simple distribution)	Displaying distribution ratios (loaded distribution)	Displaying energy usage (simple distribution)	Displaying energy usage (loaded distribution)
↓						
Main 5 Sub 5 Clear accum.data	Note 6	▲ Note 1	❍	❍	❍	❍
↓						
Main 6 Sub 1 Zone name	Note 7	▲	▲	▲	▲	▲
↓						
Main 6 Sub 2 ZoneNo./Mng.target	Note 7					
(1) Zone No.		▲	▲	▲	▲	▲
(2) Management target		▲	▲	▲	▲	▲
↓						
Main 6 Sub 3 Program timer						
(1) Daily timer		▲	▲	▲	▲	▲
(2) Weekly timer		▲	▲	▲	▲	▲
↓						
Main 6 Sub 4 Ten.Ho/TimerSp.Day		▲	▲	▲	▲	▲
↓						
Main 6 Sub 5 Prohibit R/C		▲	▲	▲	▲	▲
↓						
Main 6 Sub 6 Distribution time zone		×	▲	▲	▲	▲
↓						
Main 6 Sub 7 Special distrib. day		×	▲	▲	▲	▲
↓						
Main 6 Sub 8 I/D unit setting						
(1) Indoor unit capacity	Note 9	×	▲	×	▲	×
(2) Electric heater capacity	Note 10	×	×	▲	×	▲
↓						
Main 6 Sub 9 Other settings		▲	▲	▲	▲	▲
(1) Checking system configuration						
(2) Set/Clear password						
(3) No-communications mode	Note 11					
(4) Buzzer						
(5) Initialization	Note 12					
(6) Auto display off						
(7) Touch panel calibration	Note 15					
(8) Power off						

6 Using the System

		Air conditioner operation only	Displaying distribution ratios (simple distribution)	Displaying distribution ratios (loaded distribution)	Displaying energy usage (simple distribution)	Displaying energy usage (loaded distribution)
↓						
Main 6 Sub 10 WEB settings	Note 17	▲	▲	▲	▲	▲
↓						
Main 6 Sub 11 User settings	Note 17	▲	▲	▲	▲	▲
↓						
Main 2 Sub 5 Cut-off/Data backup						
(1) Manual cut-off	Note 6	×	❍	❍	❍	❍
(2) Data backup	Note 13	▲	▲	▲	▲	▲
(3) Restore	Note 13 and 16	▲	▲	▲	▲	▲
↓						
END						

Note 1 Settings are necessary when you would like to monitor operation accumulated time only and distribution ratio is not needed.
Note 2 Settings are necessary only when air-conditioners include a 3-Way type unit.
Note 3 Make settings even when no distribution is made, if you would like to control units as a bundle of the group of tenants.
Note 4 Settings are necessary only when the indoor unit has a interface adaptor and is set at almighty.
Note 5 Settings are necessary only for the indoor unit set at almighty.
Note 6 Immediately before delivery, execute "Clear accum.data" to clear total data taken during test runs. When clearing the test run data after storing it, make "Cut-off" (Main 2 Sub 5) manually.
Note 7 Make the settings when you would like to operate the unit by optional grouping.
Note 8 When using the unit along with the system controller or ON/OFF-controller, the controller-side control classification needs to be taken into consideration. The system controller or ON/OFF-controller-side zone varies as varying central addresses from the Intelligent Controller.
Note 9 Settings are necessary only for interface adaptor.
Note 10 Settings are unnecessary for the simple distribution as they will be taken into consideration in calculation only for the loaded distribution.
Note 11 Always set the mode at "NO (Normal)".
Note 12 Do not make any initialization imprudently as it may cause missing of all the set and cut-off data.
Note 13 The system works only with the backup PC card inserted, which is separately available.
Note 14 Always manually make the cut-off processing in advance to vary the method of distribution.
Note 15 Although the touch panel is adjusted before factory shipment, calibrate deviations if any.
Note 16 Do not restore any data imprudently as it may return them to their backed-up status.
Note 17 Settings are necessary when you would like to control/monitor the unit via network.

6 Using the System

Main 5 Sub 1

6.3.2 Setting the date, cut-off date, and distribution ratio calculation method

Use this screen to set the current date and time, and make settings related to time.
These settings are needed for program timers and distribution ratio calculation, **so be sure to make them before starting operation of the system**.

Procedure

Select 5.Initial settings in the main menu and 1.Date/Distrib. in the sub menu, then proceed as follows.

① Set the current date and time.
Under "(1) Current time", select the current year, month, day, hour, minute, and second from the drop-down lists(▼).
The day of the week is shown automatically.
Press the Set button to set the settings.

② Set the monthly cut-off day.
Under "(2) Cut-off day", select a number from 1 to 28 or End (to select the last day of the month) from the drop-down list(▼).

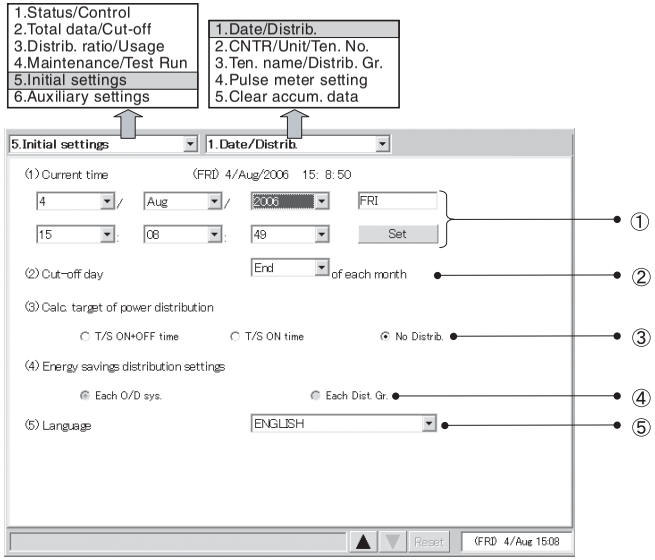

If the time set is ahead of the current time, the program timer set in that period becomes invalid and transmission is not performed.

6 Using the System

Main 5 Sub 1

③ Select the calculation target of power distribution.
(3) Select T/S ON+OFF time, T/S ON time, or No Distrib..
- T/S ON + OFF time
  To be selected when taking power both for the outdoor and indoor units to make distribution calculation.
- T/S ON time
  To be selected when taking power only for the outdoor unit to make distribution calculation.
- No Distrib.
  To be selected when distribution calculation for gas and electricity is unnecessary.

④ Select the energy savings distribution settings.
(4) Select Each O/D sys. or Each Dist. Gr..
This item cannot be selected when No Distrib. has been set for "(3) Calc. target of power distribution".
Select a range where the energy savings effect in 3 WAY units can be reflected on the distribution calculation.
- Each O/D sys.
  The energy savings operation in 3 WAY units is reflected only on the air conditioning distribution for the tenant for the outdoor system.
- Each Dist.Gr.
  The energy savings operation in 3 WAY units is reflected on air conditioning distributions for all the tenants in the overall distribution group including them.
  (However, this is effective only when plural distribution groups have been set.)

⑤ In the Language pull-down menu (5), select the language you would like to use.

6 Using the System

Main 5 Sub 2

6.3.3 Setting central addresses, unit names and tenant numbers

Use this screen to set central addresses, names of units connected to the system and tenant numbers.

Procedure

Select 5.Initial settings in the main menu and 2.CNTR/Unit/Ten. No. in the sub menu, then proceed as follows.

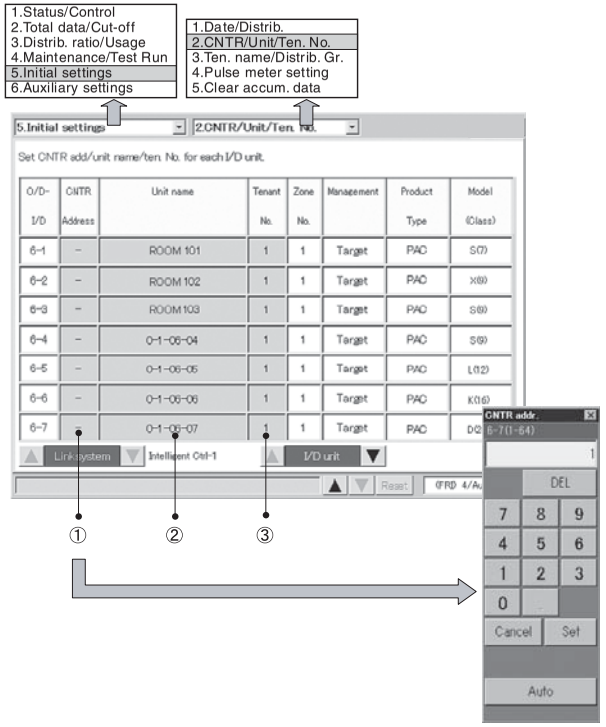

① When you touch a central address column, a screen will be displayed as shown on the right.
Input a number 1 to 64 to set central address.
When you touch [Auto], the central address will be automatically set.

> Two identical central address settings cannot be used within a link system. If you input an existing address, the input data is cancelled.
> It may take several minutes before the central address settings are reflected in the display.
> When other central controllers (system controller, etc.) are connected, it is recommended to set the central addresses on those units.

6 Using the System

Main 5 Sub 2

② Touch an unit name column. A keyboard window like the one shown below appears.
Use the keyboard to enter an unit name. Unit names can be up to 12 characters long.

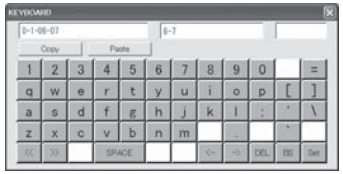

* See “7 Entering Text and Numbers” for details about entering text in keyboard windows.
* You can copy and paste text using the [Copy] and [Paste] buttons. See “7.2 Entering Text” for details.

③ Touch a tenant number.A keyboard window like the one shown below appears. Use the keyboard to enter the tenant number.

*** The tenant number range is from 1 to 256.**

6 Using the System

Main 5 Sub 3

6.3.4 Setting tenant names and distribution groups

Use this screen to set tenant names and distribution groups.
You can also use this screen to set the product type (PAC, GHP, HOT, etc.) of indoor units.

Procedure

Select 5.Initial settings in the main menu and 3.Ten. name/Distrib. Gr. in the sub menu, then proceed as follows.

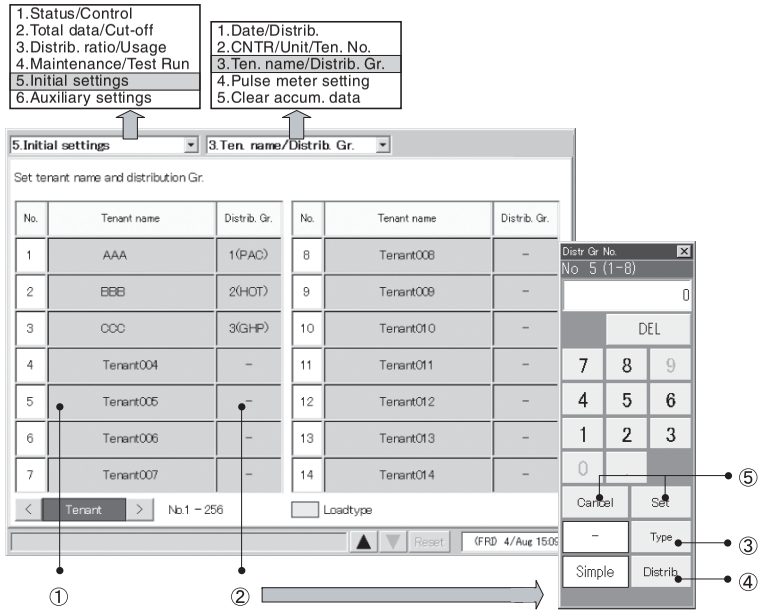

① Touch a tenant name. A keyboard window appears. Use the keyboard to enter the tenant name. Tenant names can be up to 20 characters long.

* See "7 Entering Text and Numbers" for details about entering text on software keyboards.
* The tenant number range is from 1 to 256.

6 Using the System

Main 5 Sub 3

② Touch a distribution group. A keyboard window like the one shown above appears. Use the keyboard to enter a distribution group number and to select the product type from among PAC, GHP and HOT. Select "Simple" or "Load" in the distribution methods.

* Refer to "10. Calculating air conditioner distribution" for details.
  The tenant set at "Load" distribution will have its "No" box display in light blue.
* The distribution group number range is from 1 to 8.
* This button is invalid when "No Distrib." has been set. (Refer to Main 5 Sub 1)
* The distribution group column set at loaded distribution has no product type such as "PAC" and "GHP" displayed.
* Make manual cut-off in advance to change the distribution method.

③ Press the Type button to select "PAC" or "GHP" for the following unit that is unable to automatically recognize product type.
- Interface Adaptor
This is only for "Simple distribution" setting.

④ Specify which distribution method, "Simple" or "Load," to apply to the selected distribution group.

⑤ Touch Set to confirm the setting, or Cancel to cancel it.

- PAC, GHP, and HOT cannot be mixed in the same group. Set up a separate distribution group for each type.
- HOT multi units cannot be recognized automatically (they are recognized as PAC). Manually set the product type to HOT.
- HOT Tenants cannot be set at the "Load" distribution.
- "Load" distribution tenants cannot be set at "HOT".
- Air conditioners unadaptable to loaded distribution cannot be set at "Load" Distribution.
- Interface Adaptors are also unadaptable to loaded distribution.

6 Using the System

Main 5 Sub 4

6.3.5 Making pulse meter settings

If you have connected pulse meters, use this screen to set the target distribution groups and the amount of electricity or gas per pulse.

Procedure

Select 5. Initial settings in the main menu, and 4. Pulse meter setting in the sub menu.

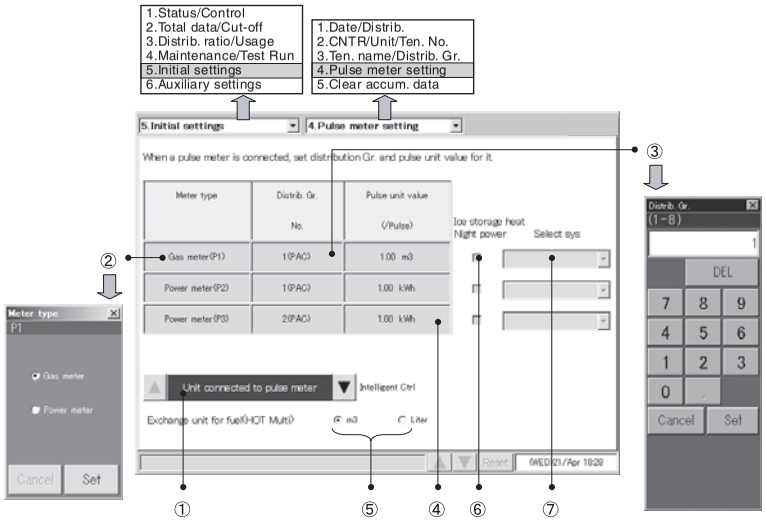

① Select the pulse meter connection destination.

② You can change the type of pulse meter (power meter or gas meter). The above indicates the factory default state. When you touch the Meter type area, the Meter type window appears so that you can select the type of pulse meter to use.

③ Touch a distribution group number. A numeric keypad appears for the distribution group. Use the keyboard to enter the distribution group number.

* The distribution group number range is from 1 to 8.

* The distribution group buttons are disabled when you have chosen not to perform distribution rate calculations (see Main 5 Sub 1).

④ Touch the pulse unit amount column and enter the amount of electricity (kWh) or gas (m^3) per pulse.

⑤ If the product type is HOT Multi, select the unit for fuel metering.

6 Using the System

Main 5 Sub 4

⑥ Select this check box for ice heat accumulation night power meters. (Enabled during loaded distribution setting only.)

* This cannot be set for electricity meters configured for use with HOT Multi or simple distribution.

⑦ For the night power meter set in ⑥, select which outdoor system to meter ice heat accumulation by selecting the address.

6 Using the System

Main 5 Sub 5

6.3.6 Clear accumulation data

Use this screen to erase total data after test runs, and to restart total calculations for operating time, operating counts, and so on.

Procedure

Select 5.Initial settings in the main menu and 5.Clear accum. data in the sub menu, then proceed as follows.

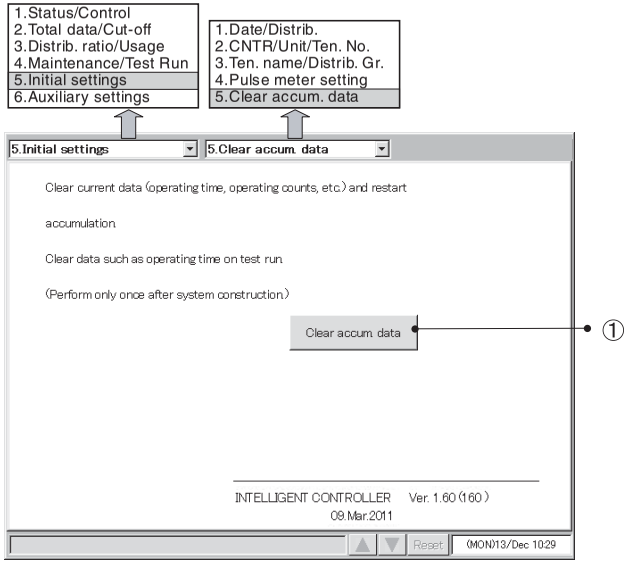

① Touch Clear accum. data.
A window like the following appears.

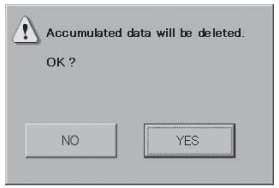

Touch Yes. Total data up to now is erased, and calculation of total operating time restarts.

6 Using the System

Main 1 Sub 1

6.4 Status Monitoring and Operation Screens

6.4.1 Displaying general information by tenant

Use this screen to display information about all connected indoor units by tenant.

Procedure

Select 1.Status/Control in the main menu and 1.Each tenant in the sub menu.

The indoor units for each tenant are displayed.

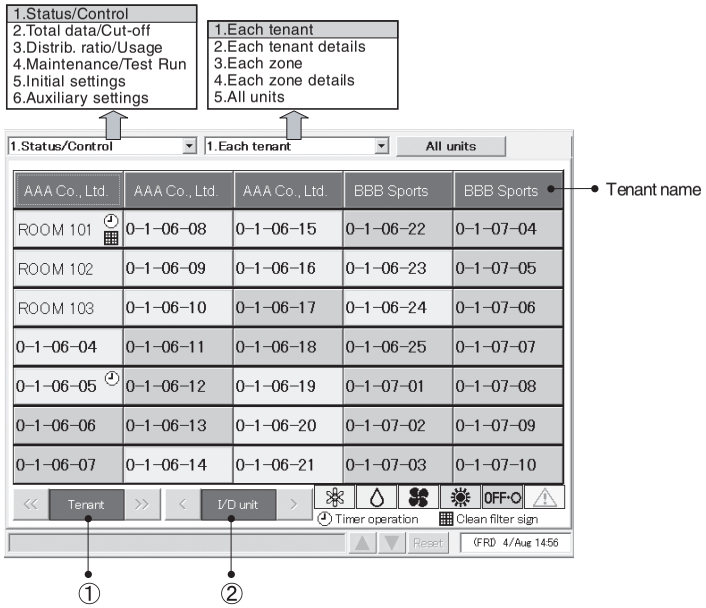

① Scrolls the display one tenant at a time.
② Scrolls the display one row at a time.

Meaning of symbols

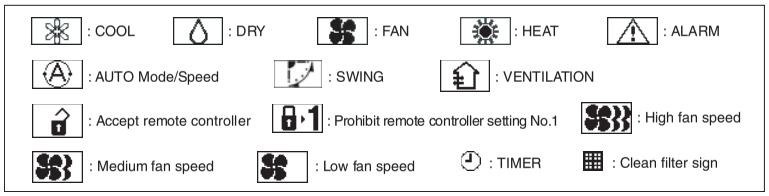

"---" is displayed in the tenant name row for indoor units not registered to a tenant.
The first 12 characters are displayed for tenant names and unit names.
If an Interface Adaptor is used, the color becomes light purple during the ON operation.

6 Using the System

Main 1 Sub 1

6.4.1.1 Operating units individually

Use this screen to operate individual indoor units.

Procedure

Select 1.Status/Control in the main menu and 1.Each tenant in the sub menu.

① When you touch the unit that you want to set, a remote control window for individual on/off operations appears.
② When you touch ⌄⌄, a remote control window appears. This window allows you to make detailed settings for operations on individual units.

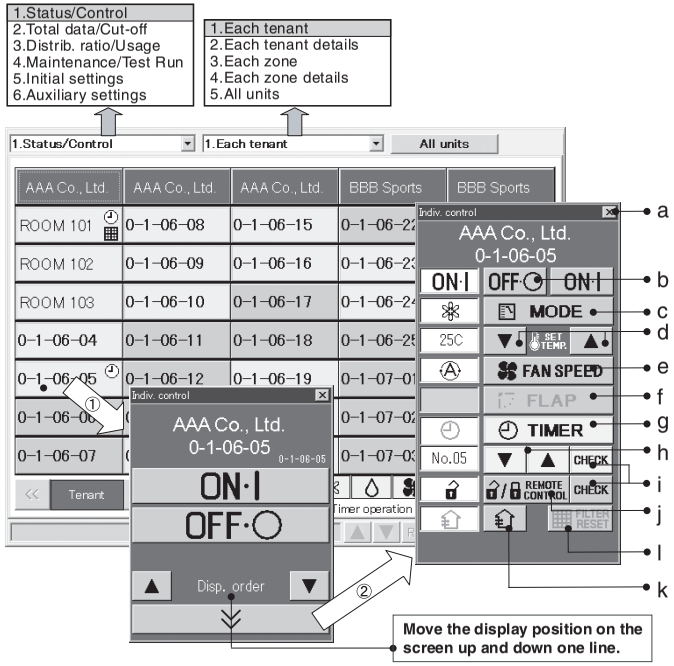

a. Closes the remote control window.
b. Sets to either Start or Stop.
c. Sets the operating mode.
d. Set the temperature.
e. Sets the fan speed.
f. Sets the fan direction. This setting is applied to the entire group. You cannot change the sub unit setting independently.
g. Sets and cancels timer operation.
h. Sets timer number from No. 1 to No. 50.
i. Displays a window that allows you to check timer setting status and remote control prohibition status.
j. Displays one of "Prhbt1/ Prhbt2/ Prhbt3/ Prhbt4/ Accept".
k. Turns the ventilation function ON and OFF. (You cannot press the button when air conditioners have no ventilation functions).
l. Resets filter cleaning signs.

- For multiple units, the operation mode for one unit may not be varied while another indoor unit is under operation. In such a case, once stop the unit, hold it for several minutes, and then vary the operation mode.
- In the remote control window, the first 16 characters for tenant names and the first 12 characters for unit names are displayed.

6 Using the System

Main 1 Sub 1

6.4.1.2 Operating all units by tenant

Use this screen to operate all connected indoor units of each tenant.

Procedure

Select 1.Status/Control in the main menu and 1.Each tenant in the sub menu.

① When you touch a tenant name, a remote control window appears. This window allows you to perform on/off operations for all units of the tenant.
② When you touch ⌄⌄, a remote control window appears. This window allows you to make detailed settings for operations on all units of the tenant.

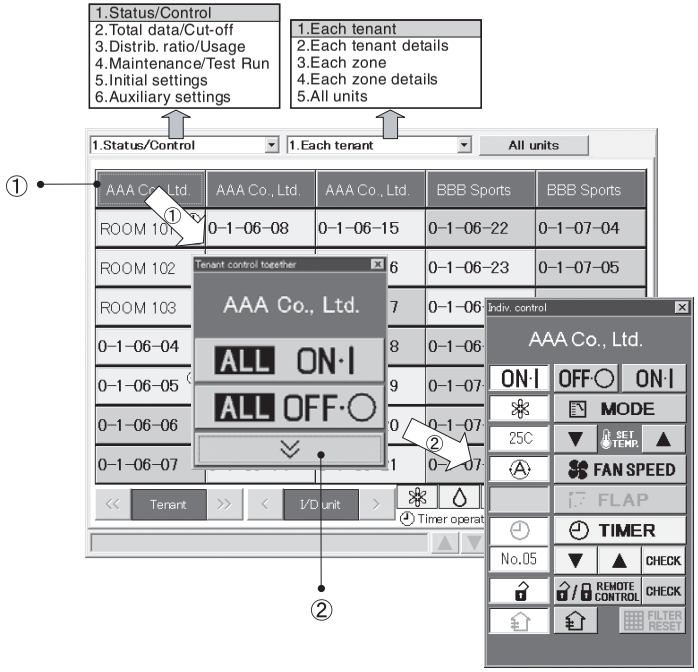

6 Using the System

Main 1 Sub 1

6.4.1.3 Operating all connected units

Use this screen to operate all connected indoor units.

Procedure

Select 1.Status/Control in the main menu and 1.Each tenant in the sub menu.

① When you touch All units, a remote control window appears. This window allows you to perform on/off operations for all connected units.

② When you touch ⌄⌄, a remote control window appears. This window allows you to make detailed settings for all connected units.

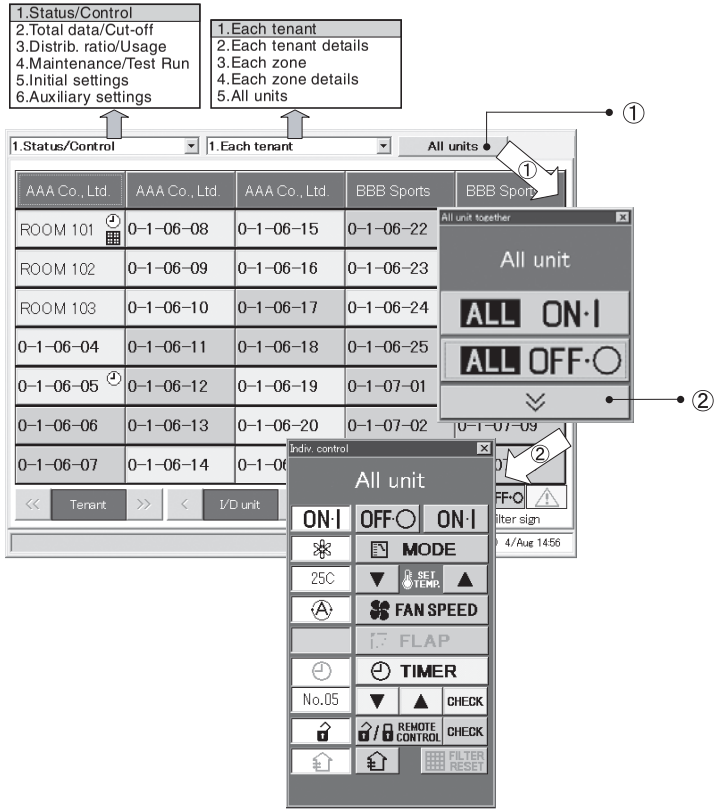

6 Using the System

Main 1 Sub 2

6.4.2 Displaying detailed information by tenant

Use this screen to display detailed settings and operating for each tenant.

Procedure

Select 1.Status/Control in the main menu and 2.Each tenant details in the sub menu.

① When you touch a unit name, a remote control window for individual operations appears.

② When you touch a tenant name, a remote control window for operating all tenant units appears.

③ When you touch All units, a remote control window for operating all connected units appears.

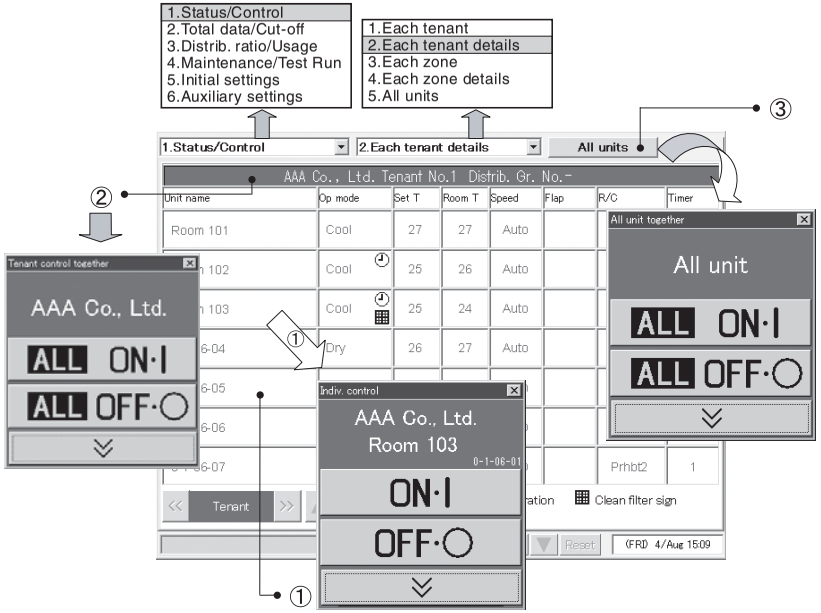

6 Using the System

Main 1 Sub 3

6.4.3 Displaying general information by zone

Use this screen to display the state of all units in a zone and to operate those units.

Procedure

Select 1.Status/Control in the main menu and 3.Each zone in the sub menu.

① When you touch a unit name, a remote control window for individual operations appears.
② When you touch a zone name, a remote control window for operating all units in the zone appears.
③ When you touch All units, a remote control window for operating all connected units appears.

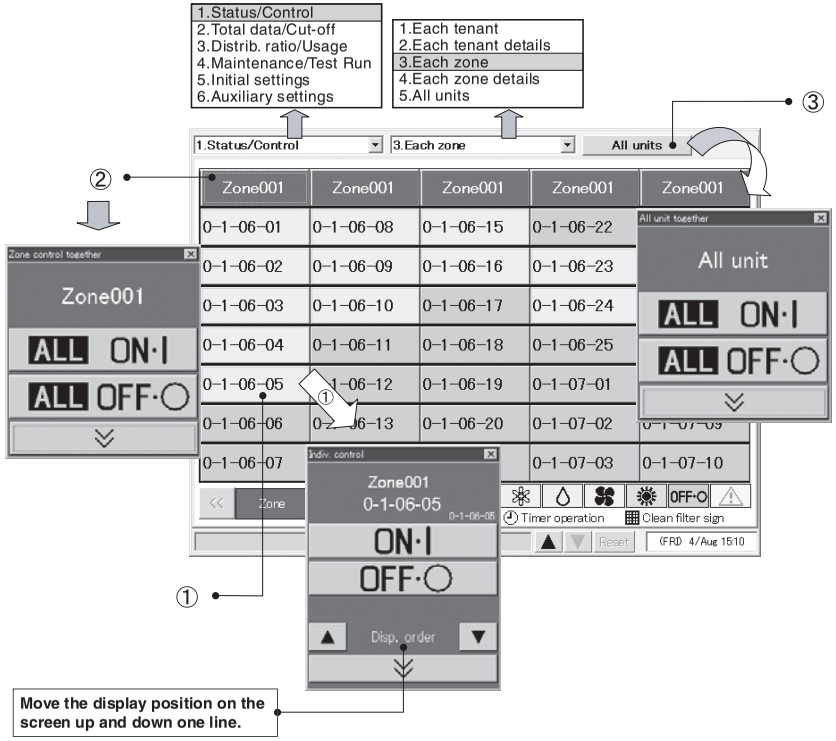

The first twelve characters are displayed for zone names and unit names.

6 Using the System

Main 1 Sub 4

6.4.4 Displaying detailed information by zone

Use this screen to display detailed settings and operating for each zone.

Procedure

Select 1.Status/Control in the main menu and 4.Each zone details in the sub menu.

① When you touch a unit name, a remote control window for individual operations appears.
② When you touch a zone name, a remote control window for operating all units in the zone appears.
③ When you touch All units, a remote control window for operating all connected units appears.

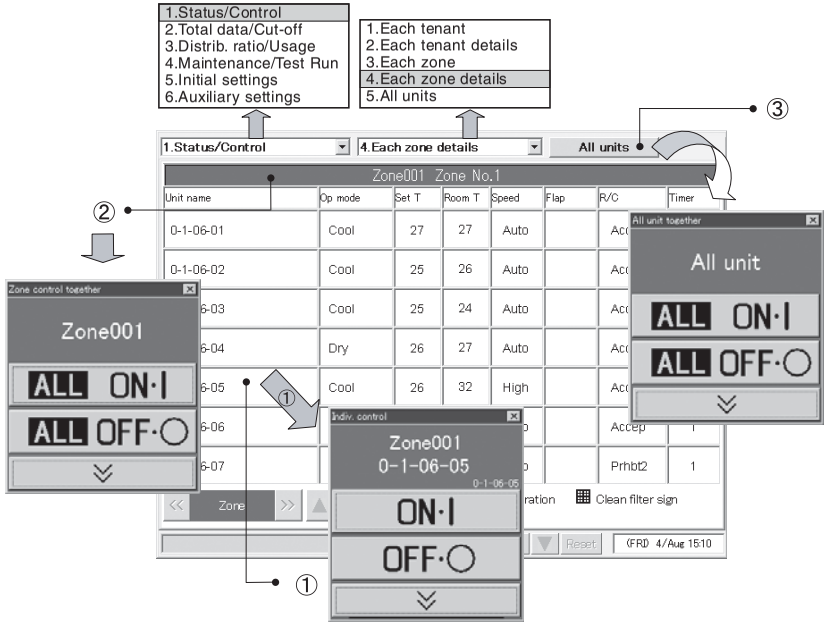

6.4.5 Displaying and operating all indoor units

Use this screen to display information about the state of all indoor units and to operate all indoor units at once.

Procedure

Select 1.Status/Control in the main menu and 5.All units in the sub menu.

One screen displays up to 100 indoor units in order of their tenant. The units can be operated individually or all at once.

① When you touch a unit name, a remote control window for individual operations appears.

② When you touch All units, a remote control window for operating all connected units appears.

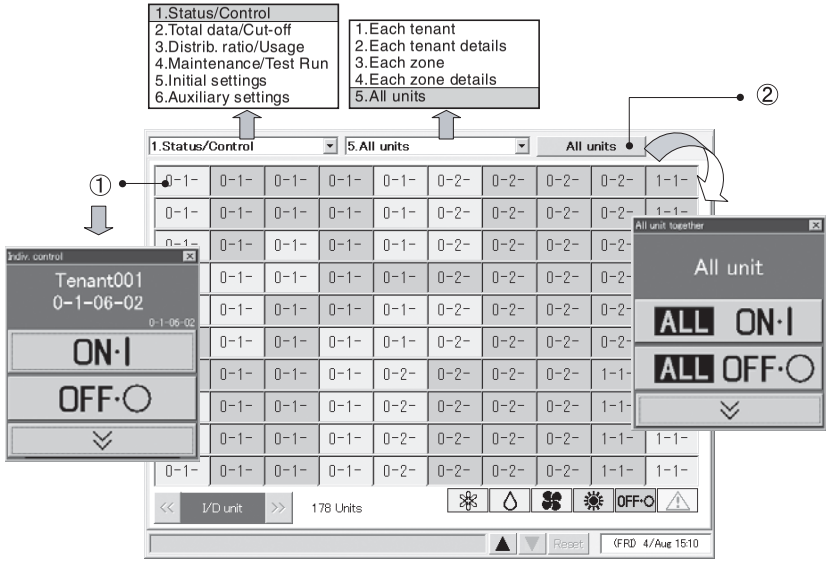

The first four characters are displayed for unit names.

6.5 Total Data and Manual Cut-Off Processing

6.5.1 Displaying total data by indoor unit

Use this screen to check total data such as the operating time and the number of operations for each indoor unit.

Procedure

Select 2.Total data/Cut-off in the main menu and 1.Each I/D unit in the sub menu.

① Selects the tenant to display.

② Selects either the current or the past (maximum 24 months) cut-off data.

③ Selects the time zone to display.

* This button will be invalid when setting the mode at "No Distrib.". (see Main 5 Sub 1)

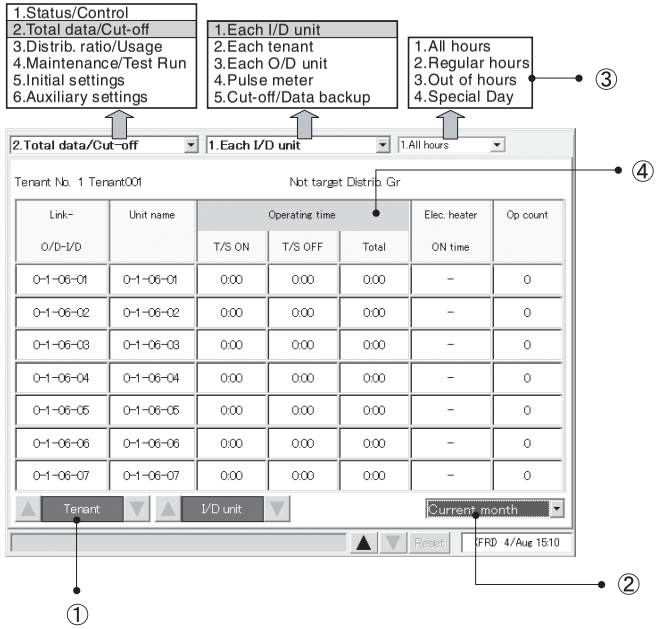

④ If you want to display operating time by fan speed, touch Operating time. The display changes as shown below.

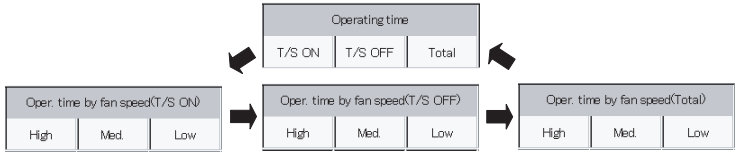

6 Using the System

Main 2 Sub 2

6.5.2 Displaying total data by tenant

Use this screen to check total data such as the operating time and the number of operations for each tenant.

Procedure

Select 2.Total data/Cut-off in the main menu and 2.Each tenant in the sub menu.

① Selects the distribution group to display.
② Selects either the current or the past (maximum 24 months) cut-off data.
③ Selects the time zone to display.
* This button will be invalid when setting the mode at "No Distrib.". (see Main 5 Sub 1)

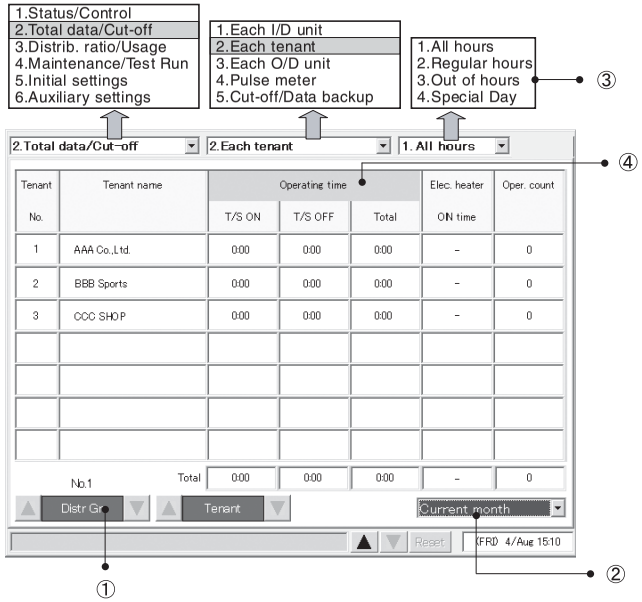

④ If you want to display operating time by fan speed, touch Operating time. The display changes as shown below.

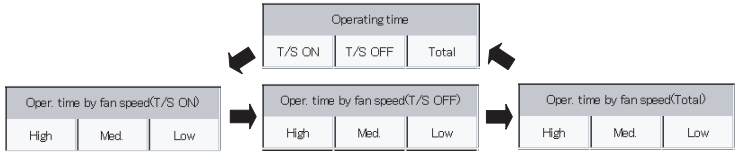

6 Using the System

Main 2 Sub 3

6.5.3 Displaying total data by outdoor unit

Use this screen to check total data such as the operating time and the number of operations for each outdoor unit.

Procedure

Select 2.Total data/Cut-off in the main menu and 3.Each O/D unit in the sub menu.

① Selects the connection destination link system to display.
② Selects either the current or the past (maximum 24 months) cut-off data.

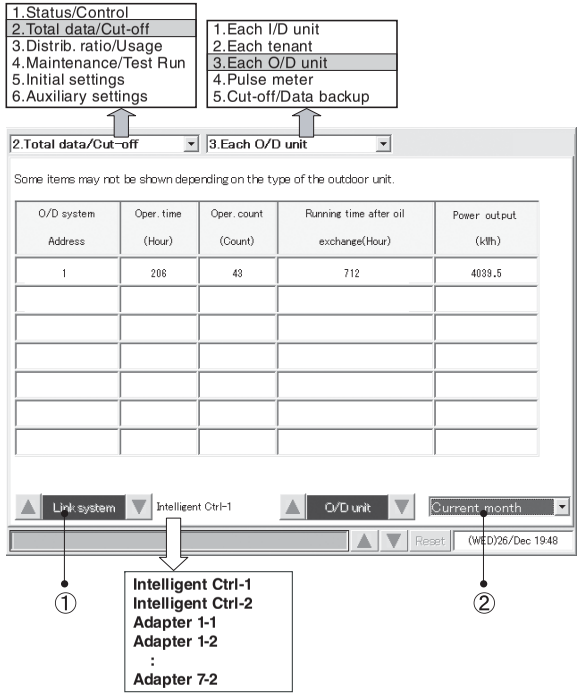

- You should make frequent checks of the running time after oil exchanges. When the time approaches for an oil exchange, contact your dealer or service provider to request an early oil exchange. The engines of GHP type outdoor unit can be damaged by operation without exchanging the oil.
- For double multiple models comprising two or more outdoor units with the same address, data with a typical unit are displayed.
- Depending on the model of the outdoor unit, some items may not be displayed.
- Monthly values are displayed for "Operating time" and "Operating count". (The values reset to "0" after cut-off processing.)
- Cumulative values from the starting point are displayed for "Running time after oil exchange (Hour)" and "Power output (kWh)". (The values do not reset to "0" even after cut-off processing.)

6 Using the System

Main 2 Sub 4

6.5.4 Displaying pulse meter total data

Use this screen to check the pulse count and other such cumulative data for pulse meters.

Procedure

Select 2. Total data/Cut-off in the main menu, and 4. Pulse meter in the sub menu.

① Selects the pulse meter connection destination.
② Selects either the current or the past (maximum 24 months) cut-off data.
③ Selects the time zone to display.
* This button will be invalid when setting the mode at "No Distrib.". (see Main 5 Sub 1)

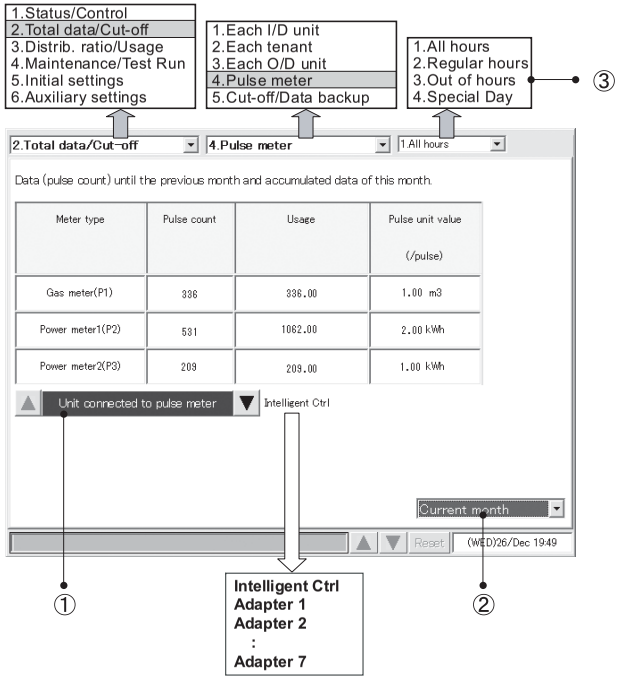

If the product type is HOT Multi, unit amount will be displayed in m^3 or liters. The meter type will be "fuel metering".

6 Using the System

Main 2 Sub 5

6.5.5 Performing manual cut-off processing and saving data

Use this screen to perform manual cut-off processing, and to back up setting and total data to optional PC Cards.

6.5.5.1 Manual cut-off processing

Proceed as follows to manually perform cut-off processing.

Procedure

Select 2.Total data/Cut-off in the main menu and 5.Cut-off/Data backup in the sub menu.

① Touch Cut-off.

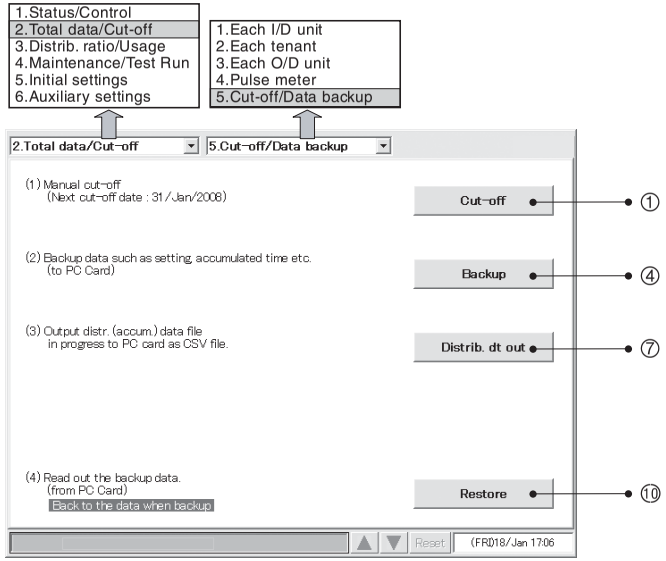

② When a window like the one shown below appears, touch the OK button.

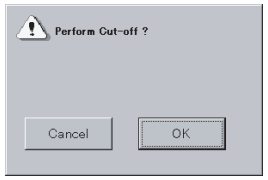

③ When a window like the one shown below appears, touch the Check button.

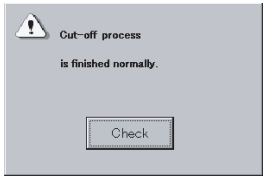

6 Using the System

Main 2 Sub 5

6.5.5.2 Saving data

Proceed as follows to back up setting data and totals data to optional PC Cards.

Procedure

Complete the cut-off processing described in “6.5.5.1 Manual cut-off processing” and then execute the following backup procedure.

④ Insert a PC card and touch the Backup button.

⑤ When a window like the one shown below appears, touch the OK button.

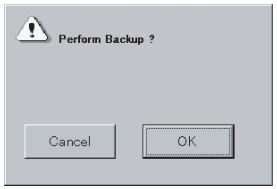

⑥ When a window like the one shown below appears, touch the Check button.

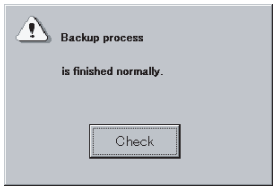

* When keeping the PC card inserted in a unit, data therein are automatically backed up once a day (at every 0 o’clock at midnight).

6.5.5.3 Outputting distribution data in progress

Save distribution data (total data) in progress before cut-off processing in PC cards (optionally available) following the procedure stated below.

Procedure

⑦ Insert a PC card and touch the Distrib. dt out button.

⑧ When a screen like the one shown below appears, touch the OK button.

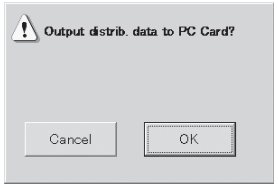

As data output by pressing the Distrib. dt out button are strictly in progress, it is impossible to apply these data for cut-off processing for the tenant who leaves halfway. (Manual cut-off processing is necessary).

6 Using the System

Main 2 Sub 5

⑨ When a screen like the one shown below appears, touch the Check button.

[File form]
A file name is fixed as follows according to the year, month, and date when the distribution data output was carried out.
20060316A.csv (Example of a file output on March 16, 2006)
When outputting repeatedly on the same day, the last “A” varies as B, C, D, and so forth.
(Outputting is possible up to 26 times a day).
Data composition in the file is the same as that in a cut-off processing file.

[Caution]
Distribution data files are stored in the “Data” folder.
Copy output distribution data files to your PC and then delete them from the PC card.
When distribution data files are too many, normal backups of cut-off data may become impossible.

6.5.5.4 Restoring data

Proceed as follows to restore setting data and total data from optional PC Cards.

Procedure

⑩ Insert a PC card and touch the Restore button.

⑪ When a window like the one shown below appears, touch the OK button.

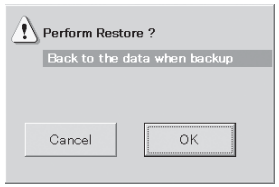

⑫ When a window like the one shown below appears, touch the Check button.

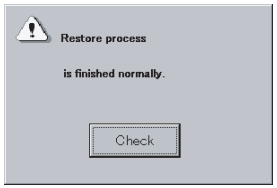

* When trying to restore data backed up using an old-version Intelligent Controller, a message “Unsupported file version. Perform Restore?” will be displayed; confirm the message and touch “Yes”.
After completing restoring, “Rebooting.” will be displayed and then touch “OK”. The data restored will be effective after rebooting. (After “Converting data” is displayed for a while, the system will automatically reboot again.)

* Everyday, at 23:30 to 00:00, cut-off processing take place, when you cannot press the Restore button.

Use the special optional PC Cards to back up and restore Intelligent Controller data. For details about using PC Cards, refer to the instructions of the PC Cards.
Depending on the amount of data, backup and restore operations may require up to 15 minutes.
When the system reboots immediately after the backup data is restored, “Converting data” may continue to be displayed for a long period of time (estimated maximum period of time: 1 hour 30 minutes). Be sure not to turn off the power of the unit during that time. The internal files may become corrupted and the system may become unable to be booted. If the system becomes unable to be booted, the internal data needs to be restored so ask your dealer or service provider to restore the data.

6.6 Air Conditioning Distribution Ratios and Energy Usage

6.6.1 Displaying distribution ratios and energy usage by indoor unit

Use this screen to check the distribution ratios and energy usage of indoor units.

Procedure

Select 3.Distrib. ratio/Usage in the main menu and 1.Each I/D unit in the sub menu.

*When "No Distrib." is selected, this screen is not accessible. (see Main 5 Sub 1)

① Selects the tenant to display.
② Selects either the current or the past (maximum 24 months) cut-off data.
③ Selects the time zone to display.
④ Switches the gas distribution ratio and gas usage display between values for air conditioning and values for power generation.
When "Gas usage" is displayed: Gas distribution ratios and usage for air conditioning are shown.
When "Gas use/PwrGen" is displayed: Gas distribution ratios and usage for power generation are shown.
For air conditioning units without a power generation feature, " – " appears under gas usage for power generation and gas distribution ratio.

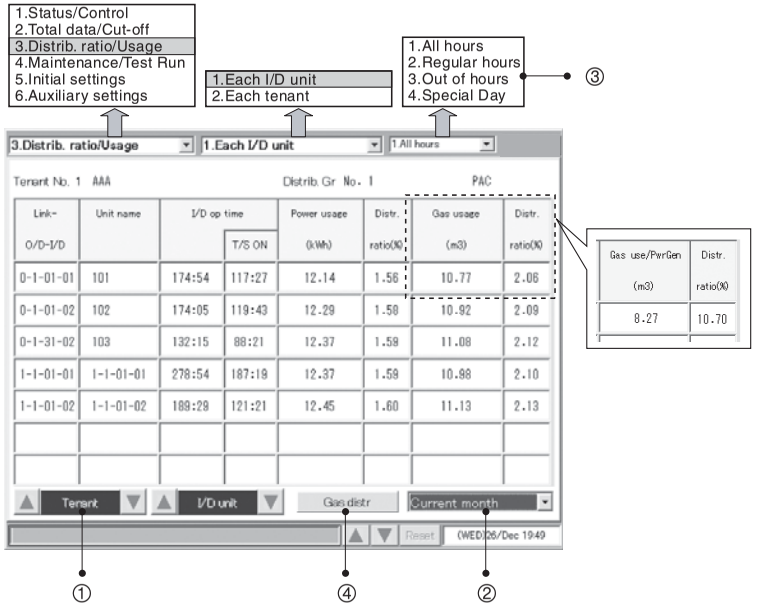

- If the product type is HOT Multi, unit amount will be displayed in m^3 or liters.
- If no pulse meter is connected, power usage and gas usage are not displayed.
- Gas usage and distribution ratios are not displayed for PAC units.

6.6.2 Displaying distribution ratios and energy usage by tenant

Use this screen to check the distribution ratios and energy usage by tenant.

Procedure

Select 3.Distrib. ratio/Usage in the main menu and 2.Each tenant in the sub menu.

*When "No Distrib." is selected, this screen is not accessible. (see Main 5 Sub 1)

① Selects the distribution group to display.
② Selects either the current or the past (maximum 24 months) cut-off data.
③ Selects the time zone to display.
④ Switches the gas distribution ratio and gas usage display between values for air conditioning and values for power generation.
When "Gas usage" is displayed: Gas distribution ratios and usage for air conditioning are shown.
When "Gas use/PwrGen" is displayed: Gas distribution ratios and usage for power generation are shown.
For air conditioning units without a power generation feature, " – " appears under gas usage for power generation and gas distribution ratio.

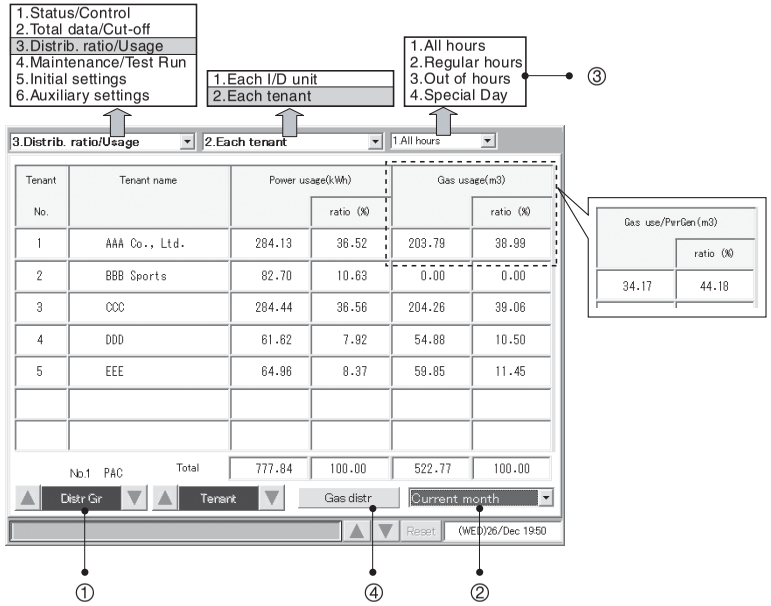

- If the product type is HOT Multi, unit amount will be displayed in m^3 or liters.
- If no pulse meter is connected, power usage and gas usage are not displayed.
- Gas usage and distribution ratios are not displayed for PAC units.

6.6.3 Time zone totals and distribution

The Intelligent Controller provides functions for recording total operating time and calculating distribution ratios for four time zones: All hours, Regular hours, Out of hours, and Special days. When using these functions, be aware of the following points.

■ Margin of error in time zone operating totals

The intelligent controller acquires operating time data accumulated by individual indoor units via communication adaptors. The Intelligent Controller itself has an internal communication adaptor function.

When the Intelligent Controller requests data from a communication adaptor, the adaptor queries indoor units for their operating time data, and forward it to the Intelligent Controller after all totals have been calculated.

For this reason, there is a margin of error of up to several minutes that may arise in count totals around the transitions from one time zone to another. For example, cases such as the following are possible.

Case 1) Indoor units are stopped at the exact end of the Regular hours time zone (or immediately before the end of the zone). For this reason, several minutes are counted in the Out of hours total.

Case 2) Indoor units are operated for the same length of time before and after the transition from Regular hours to Out of hours, but the totals for the two zones are not the same.

■ Note about daily timer settings

For communications reasons, there is a slight delay before units can be stopped by a timer. Therefore you should avoid setting timers that stop units exactly at the transition between two time zones.

For example, if you simultaneously stop a large number of indoor units at the transition from Regular hours to Out of hours, a certain period of time is required for the indoor units to actually stop. This time is counted as Out of hours time.

If you need to set a timer to stop units before a time zone transition, you should avoid setting it within 10 minutes of the transition. (This is only an approximately guideline, since results vary depending on communications conditions.)

■ Communications errors and data totals

Data totals may not be accurate if communications errors occur in the Intelligent Controller, indoor units, or communication adaptors.

For example, if a communications error occurs in the Regular hours time zone, and normal communications are restored in the Out of hours time zone, all data received by the Intelligent Controller will be counted in the Out of hours time zone.

Totals data received by the Intelligent Controller is counted in the time zone in which it is received.

■ Usage for "All hours"

The usage of "all hours" is calculated from the ratio of distributed portion of the entire group based on the total of operation data in all time zones. Therefore, it is not consistent with the total usage of "regular hours", "Out of hours", and "special day".

6.7 Maintenance and Test Runs

6.7.1 Checking inspection signs

Use this screen to check for indoor units for which filter cleaning signs have been issued, and outdoor units (GHP) for which engine oil inspection signs have been issued.

Procedure

Select 4.Maintenance/Test Run in the main menu and 1.Inspection sign in the sub menu.

If filter cleaning signs or engine oil inspection signs have been issued, contact your dealer or service provider to request cleaning or oil exchange.

Filter cleaning signs are only an approximate guide. We recommend that you clean indoor unit filters regularly, even if no signs have been issued.

6 Using the System

Main 4 Sub 2

6.7.2 Checking the alarm logs

Use this screen to check logs of up to the past 14 alarms and errors for individual indoor units.

Procedure

Select 4.Maintenance/Test Run in the main menu and 2.Alarm log in the sub menu.

① Select the tenant to display.
② Select the indoor unit to display.

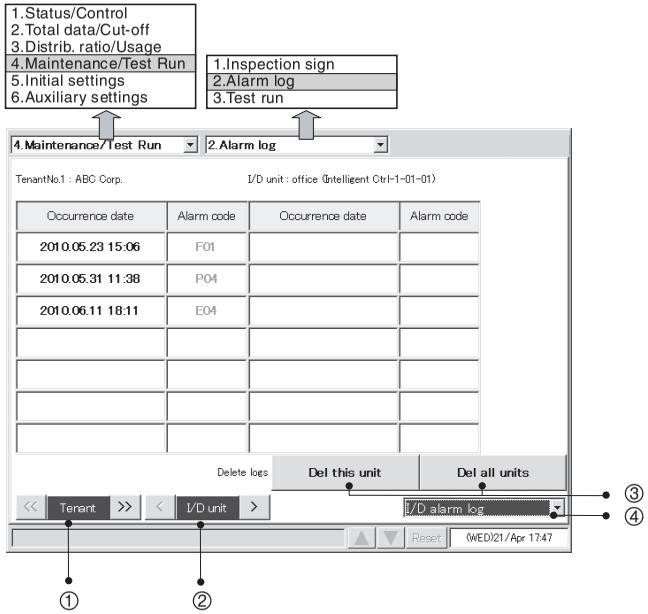

③ Touch the Del this unit button to delete the alarm logs of the selected unit only, or touch the Del all units button to delete the alarm logs of all units.
When a window like the following appears, touch the Yes button.

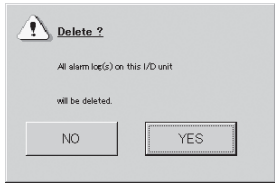

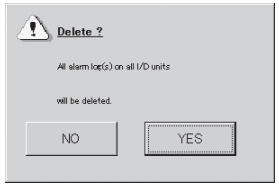

6 Using the System

Main 4 Sub 2

④ Select "I/D alarm log", "O/D comm. error log", or "Adapter alarm log".

[O/D comm. error log] logs the history of errors in communication between the outdoor unit and the Intelligent Controller or the communication adaptor.

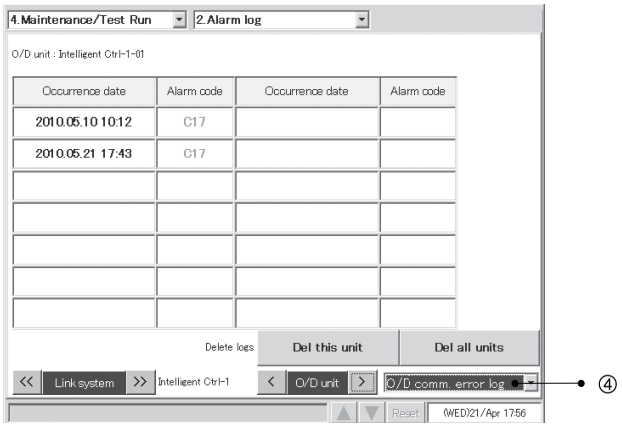

[Adapter alarm log] logs the history of warnings as determined by the Intelligent Controller or the communication adaptor.
(Duplicate adaptor addresses, communication error between the Intelligent Controller and adaptor, etc.)

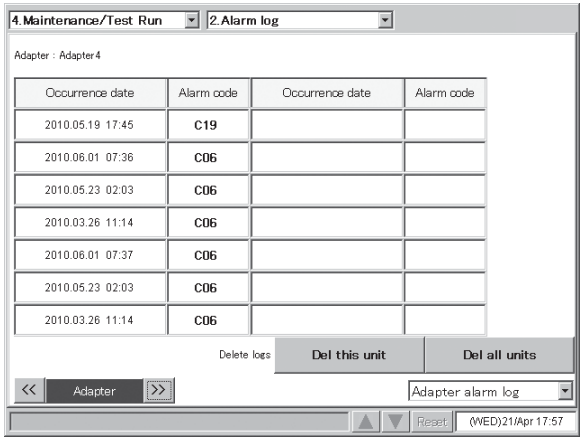

6 Using the System

Main 4 Sub 3

6.7.3 Executing test runs

Use this screen to display list of each indoor unit for outdoor unit system addresses.
You can execute test runs , either for each outdoor unit system address or individually.

Procedure

Select 4.Maintenance/Test Run in the main menu and 3.Test run in the sub menu.

① Select a connection destination link system.
② Select the outdoor unit to operate.

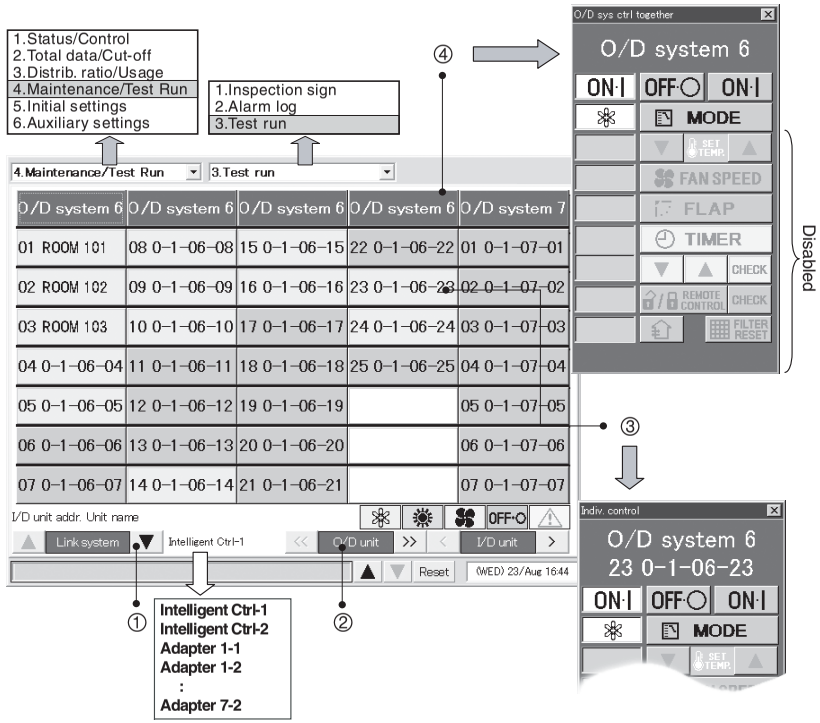

③ To operate an individual unit, touch a unit name and operate with the individual control remote control window.
④ To operate all units in an outdoor unit system, touch the outdoor unit system address column. A remote control window for operating an outdoor unit system appears. Use this window to execute a test run. Select Cool, Heat, or Fan as the operating mode.

6 Using the System

Main 6 Sub 1

6.8 Auxiliary Settings

6.8.1 Registering zone names

You can assign names to zones.
Zones are unrelated to distribution, so you can mix GHP, PAC, and HOT units, and make settings that extend across link systems.
Start/stop, monitoring, timer operation and so on can be done all at once for all units in a zone.

Procedure

Select 6.Auxiliary settings in the main menu and 1.Zone name in the sub menu.

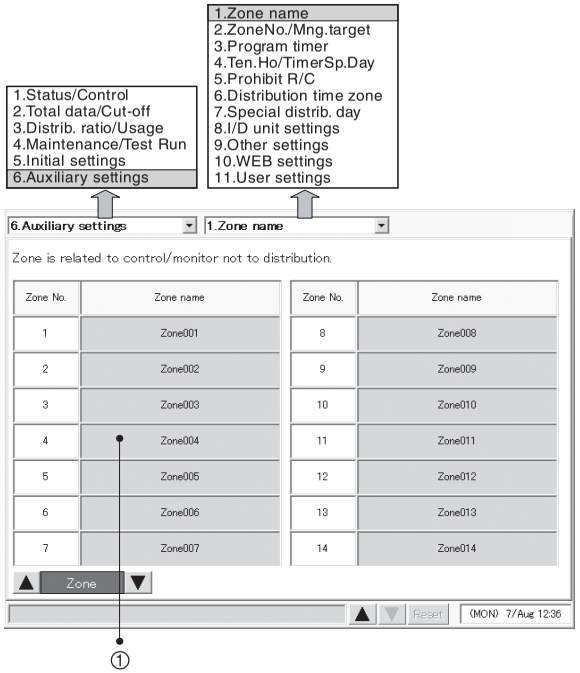

① Select a name to register or modify. A software keyboard appears.
② Enter the name with the keyboard.
Names can be up to 20 characters long.
* See “7 Entering Text and Numbers” for details about entering text in keyboard windows.
* Zones name can be registered in the range 1 to 128.

6 Using the System

Main 6 Sub 2

6.8.2 Setting zone numbers and management targets

Use this screen to set the zone number and management category for individual indoor units. Be sure to assign a central address to each unit.

Procedure

Select 6.Auxiliary settings in the main menu and 2.ZoneNo./Mng.target in the sub menu.

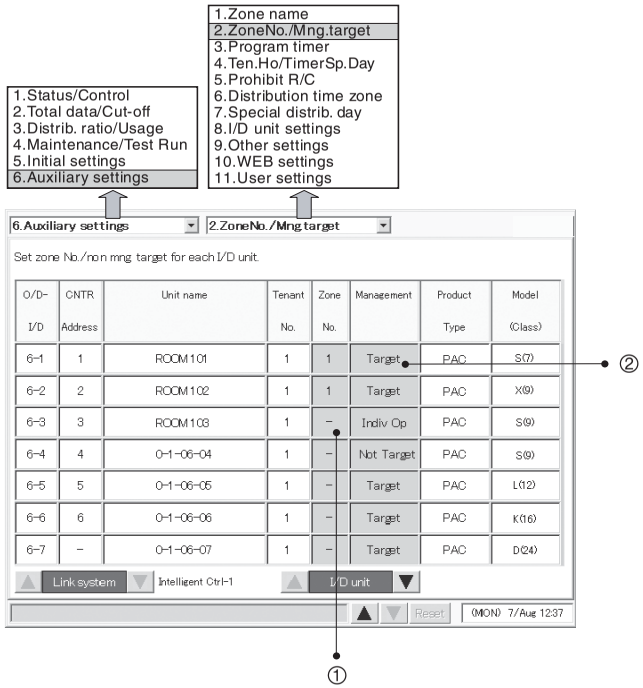

6 Using the System

Main 6 Sub 2

① A window like the one shown at right appears when you touch the zone number column.
Enter digits specify to the zone number.
* Zone No. can be registered in the range 1 to 128.

② A window like the one shown at right appears when you touch the management column.
Select one from among Target, Individual operation, or Not Target.

- Individual operation:
  Display, total, distribution, and individual operation are possible with Individual units, but all-unit operations (all tenant units, all zone units, all connected units, external all stop input, external all start input, etc.) are not possible.
  However, external all-unit alarm output and external all-unit operation output are possible.

- Not Target:
  No operations are possible for Not Target units, including information display (except for Main 5 Sub 2 and Main 6 Sub 2), totals calculation, and distribution.

6 Using the System

Main 6 Sub 3

6.8.3 Programming timers

Up to 50 types of daily timers and 50 types of weekly timers can be programmed. It is also possible to set holidays or timer special days for tenants.

6.8.3.1 Programming daily timers

Up to 50 types of daily timers can be programmed, with up to 50 times per day. Start/stop, operation mode, temperature settings, and remote control prohibition can be programmed.

Procedure

Select 6.Auxiliary settings in the main menu and 3.Program timer in the sub menu.

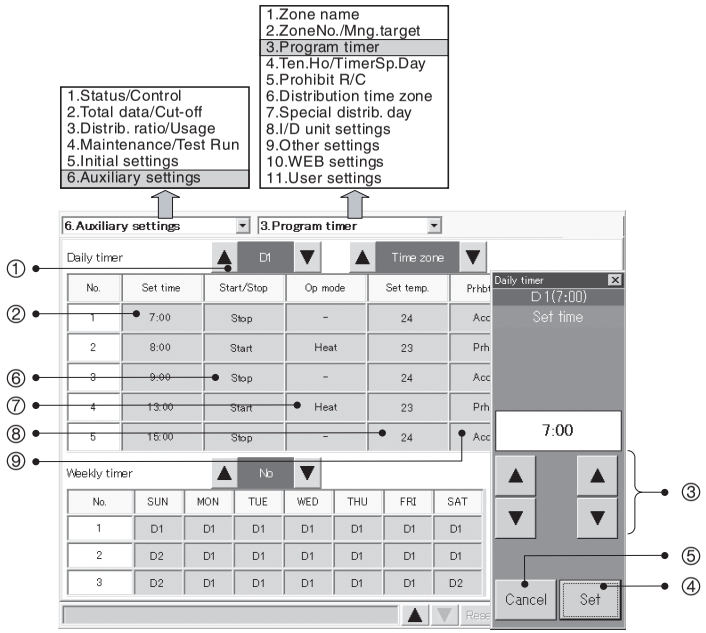

① With Daily timer, select a timer number (D1 to D50 , Holiday , Sp1 to Sp5).
The Holiday number is reserved for tenant holiday settings.
The timer numbers Sp1 to Sp5 are reserved for setting timer special days.

② Touch the Set time column.

③ Select the time to set.

6 Using the System

Main 6 Sub 3

④ Touch Set to confirm the time.

⑤ Touch Cancel to cancel the setting.
The display changes to "—".

⑥ Touch the Start/Stop column and set in the following window.

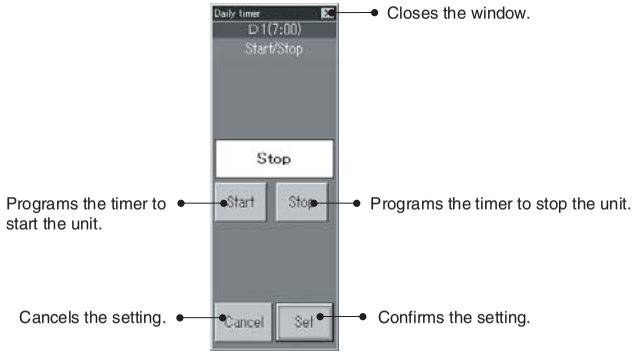

⑦ Touch the Op mode column and set in the following window.

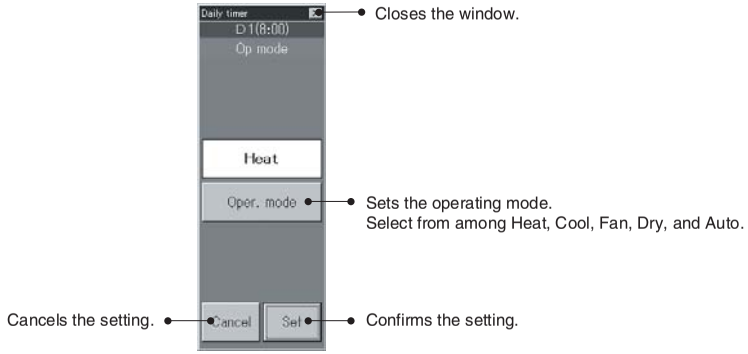

6 Using the System

Main 6 Sub 3

⑧ Touch the Set temp. column and set in the following window.

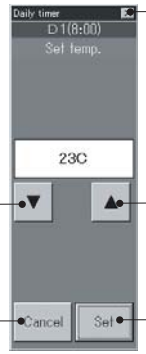

⑨ Touch the Prhbt R/C column and set in the following window.

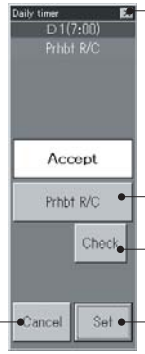

Since different air conditioner models have different upper and lower temperature limits, the temperature is set automatically within the supported range when an air conditioner is actually controlled.
Items for which no time is set are ignored.

6 Using the System

Main 6 Sub 3

6.8.3.2 Programming weekly timers

You can program weekly timers by assigning any daily timer to each day of the week. Up to 50 types of weekly timers can be programmed.

Procedure

Select 6.Auxiliary settings in the main menu and 3.Program timer in the sub menu.

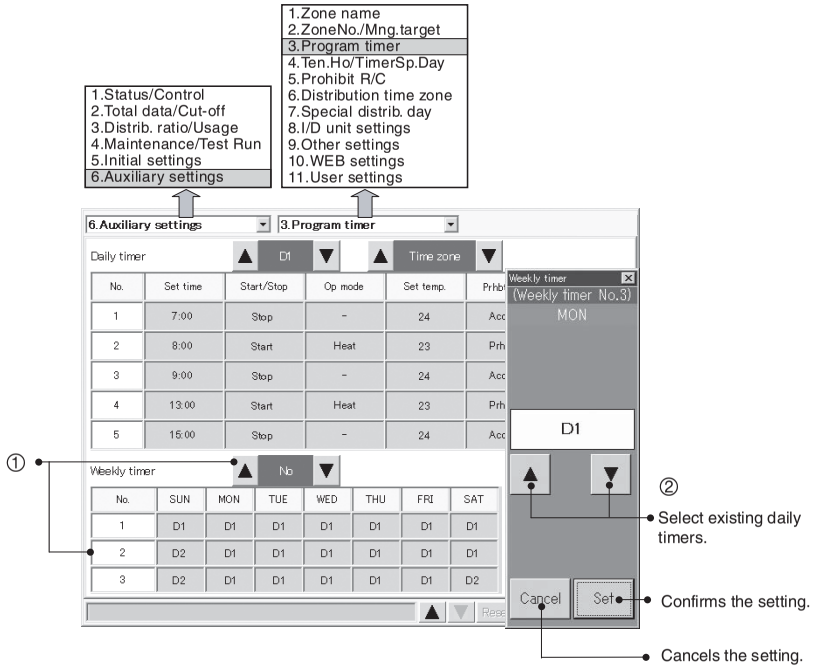

① With Weekly timer, select a weekly timer number (1 to 50).
Up to 50 types of weekly timers can be set. Three items each are displayed.
Each press of ▼ changes the display in order like 1,2,3 → 2,3,4 → 3,4,5.
Each press of ▲ changes the display in order like 50,1,2 → 49,50,1 → 48,49,50.

② Select the daily timer number (D1 to D50, Holiday, Sp1 to Sp5) to set and confirm or cancel each button.

6 Using the System

Main 6 Sub 4

6.8.4 Setting Tenant holiday/Timer special day

You can make settings by tenant of days of setting timer for holidays and timer special days.
Holidays and timer special days can be registered for up to the next two years.

Procedure

Select 6.Auxiliary settings in the main menu and 4.Ten.Ho/Timer Sp. Day in the sub menu.

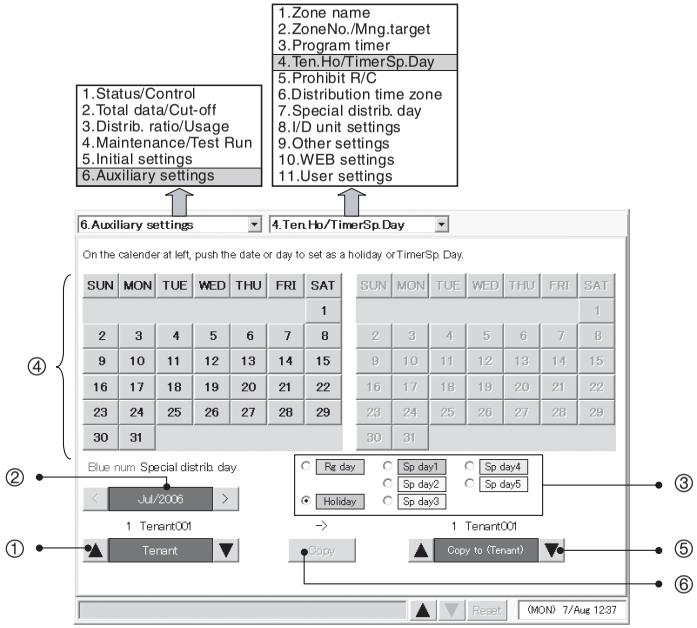

① Select the tenant.
② Select the calendar for the month of the year to set.
③ Select items (regular days, holidays, and special days 1 to 5) you would like to set.
④ Point the item (regular days, holidays, and special days 1 to 5) you would like to set on the left calendar and touch the date or day of the week.
⑤ If holidays and timer special days have already been registered for a tenant, you can copy them from the calendar to the calendar on the right. Select the tenant for the copy destination calendar.
⑥ A window like the one on the right appears when you touch Copy.
⑦ Touch the OK button to copy two years of holidays from the tenant on the left to the tenant on the right.
* Set the system mode at "Regular day" to cancel settings of holidays and timer special days.

6 Using the System

Main 6 Sub 5

6.8.5 Prohibiting remote control use

You can prohibit the use of the remote controls connected to indoor units.

Procedure

Select 6.Auxiliary settings in the main menu and 5.Prohibit R/C in the sub menu.

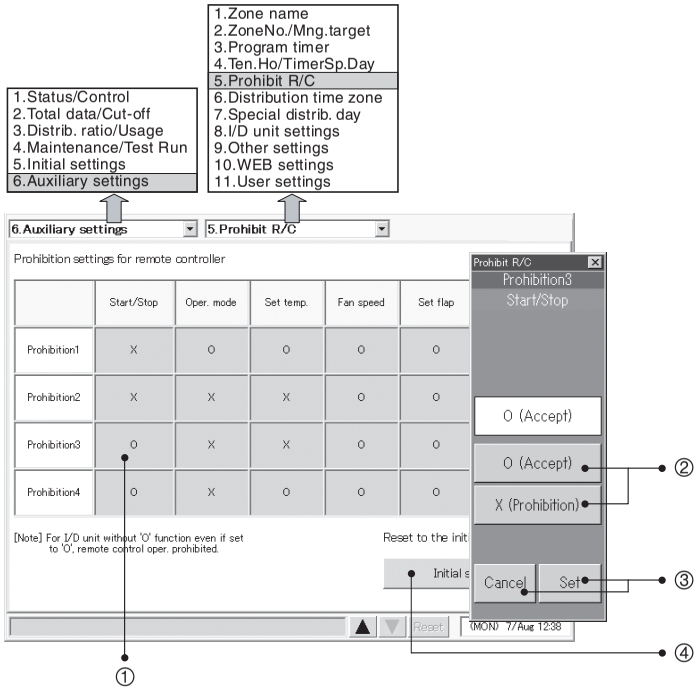

① Touch the item you want to change to display a settings window for that item.
② To allow remote control use, touch the O (Accept) button. To prohibit remote control use, touch the X (Prohibition) button.
③ Touch the Set button to confirm the setting, or the Cancel button to cancel it.
④ Touch the Initial setting button to restore the initial setting (described above).

6 Using the System

Main 6 Sub 6

6.8.6 Setting distribution time zones

You can set distribution time zones for the same day of each week.

Procedure

Select 6.Auxiliary settings in the main menu and 6.Distribution time zone in the sub menu.

*When "No Distrib." is selected, this screen is not accessible. (see Main 5 Sub 1)

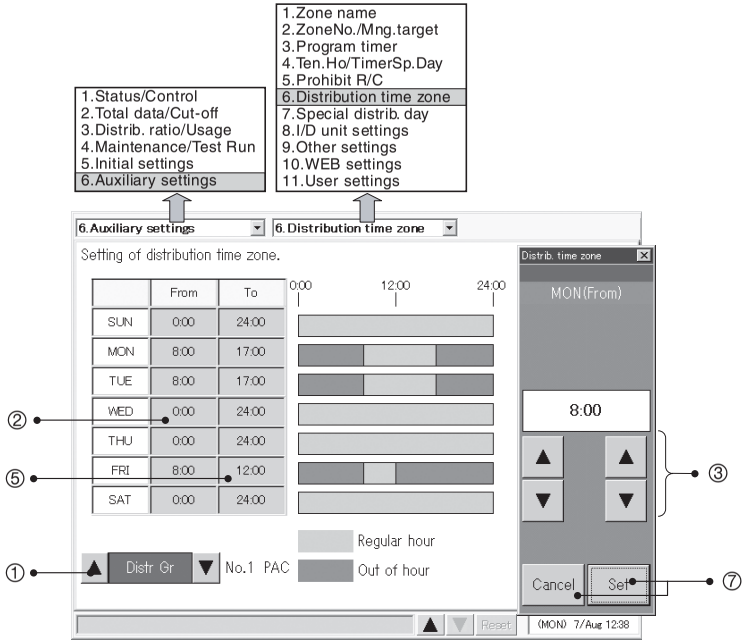

① Select the distribution group.
② Touch the "From" column.
③ Set the start time of regular hours to a time between 00:00 and 24:00 (30-minute intervals).
④ Touch the Set button to confirm the setting, or the Cancel button to cancel it.
- If you set the start time to 00:00 and the end time to 24:00, the entire day is regular hours.
- If the start time is the same as the end time, the entire day is out of hours.
- If the start time and the end time are reversed, the outer side is regular hours.

⑤ Touch the "To" column.
⑥ Set the end time of regular hours to a time between 00:00 and 24:00 (30-minute intervals).
⑦ Touch the Set or Cancel button.

* Refer also to "6.6.3 Time zone totals and distribution".

6 Using the System

Main 6 Sub 7

6.8.7 Setting special distribution days

You can set special distribution days to which normal time zone settings do not apply.
Use this function for holidays and so on. Special distribution days can be registered for up to the next two years.

Procedure

Select 6.Auxiliary settings in the main menu and 7.Special distrib. day in the sub menu.

*When "No Distrib." is selected, this screen is not accessible. (see Main 5 Sub 1)

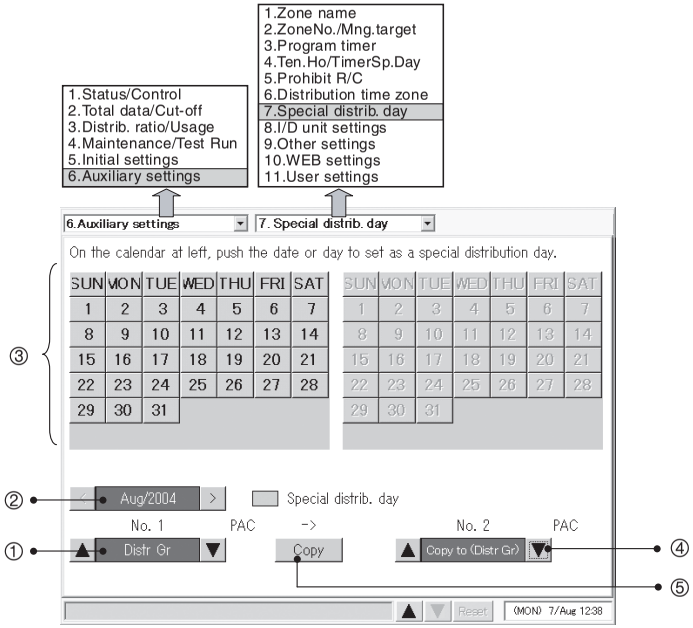

① Select the distribution group to set.
② Select the calendar for the month of the year to set.
③ On the left-side calendar, touch the date or day to set as a special distribution day.
④ If special distribution days have already been registered for a distribution group, you can copy them from the calendar to the calendar on the right. Select the distribution group for the copy destination calendar.
⑤ A window like the one on the right appears when you touch Copy.
⑥ Touch the OK button to copy two years of special distribution days from the distribution group on the left to the distribution group on the right.

6 Using the System

Main 6 Sub 8

6.8.8 Indoor unit settings

You can use this screen to check the air conditioning capacity of indoor units, and to set the capacity. Normally you do not need to change settings with this screen.

Exercise care when changing settings, because improper settings can prevent accurate distribution.

Procedure

Select 6.Auxiliary settings in the main menu and 8.I/D unit settings in the sub menu.

*When "No Distrib." is selected, this screen is not accessible. (see Main 5 Sub 1.)

① Select the link system to display.

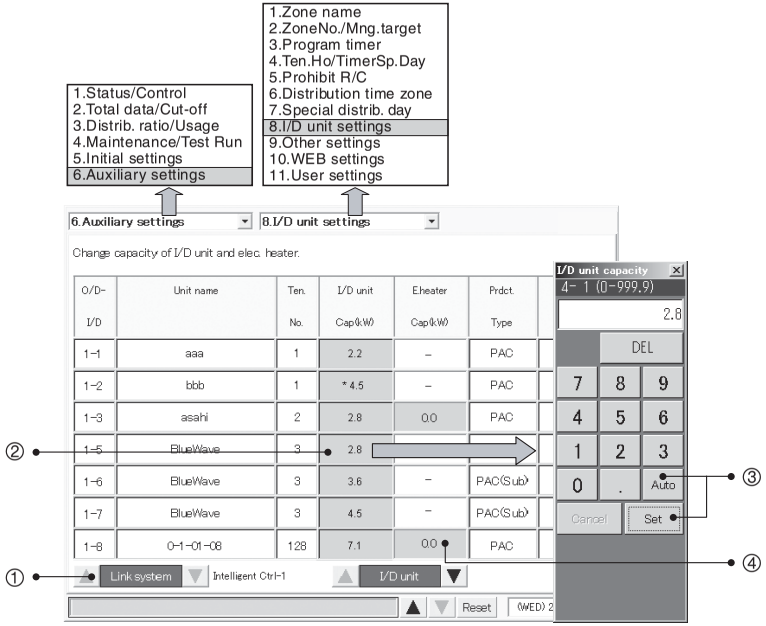

② To change a capacity setting, touch an item in the capacity column, and enter a kW capacity from 0 to 999.9 in the numeric keypad window which appears.

③ Touch Set to confirm the setting.
Or Auto to cancel it. (The capacity value will restore the received level)
If you have changed the capacity, an asterisk (*) appears to the left of the value.

④ Touching the heater capacity column for the indoor unit having an electric heater will have a soft ten-key for the heater capacity setting displayed. Input numbers 0.0 to 100.00 by kW. However, these are effective only for loaded distribution settings.

6 Using the System

Main 6 Sub 9

6.8.9 Other settings

You can use this screen to register passwords, initialize data, and make power saving settings for the LCD display.

Procedure

Select 6.Auxiliary settings in the main menu and 9.Other settings in the sub menu.

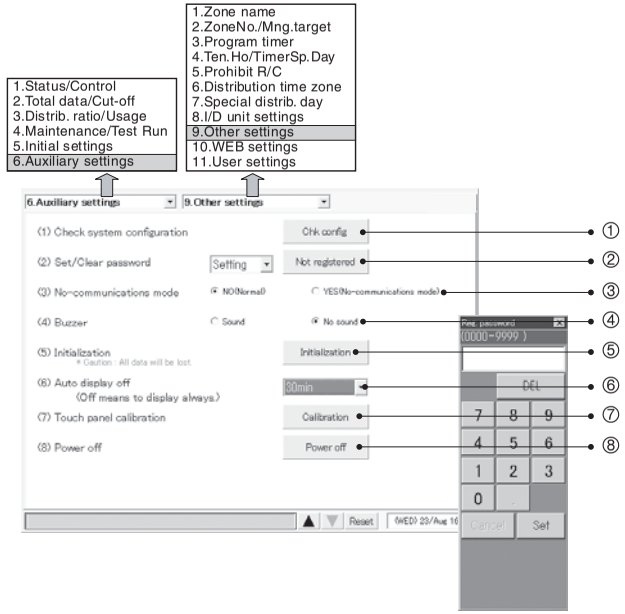

6.8.9.1 Checking the connection configuration

① Touch the Chk config. button to check the connection configuration of the system.
You should do this after adding or deleting units, changing addresses, and so on.
If the system configuration has changed, cut-off processing and confirmation of the system processing messages appear. For details, see "6.9 System Configuration Changes".

Up to 10 minutes may be required to check the system configuration.

6 Using the System

Main 6 Sub 9

6.8.9.2 Registering passwords

② Click the Not registered button to display a keyboard window for registering passwords.
You can register 3 kinds of passwords: “Setting”, “Distrib.”, and “Operation”.
Refer to “Menu list” under “5. Quick reference” for details.
Enter a 4-digit number from 0000 to 9999, and touch the Set button. The caption on the Not registered button changes to Registered.
To delete a password, first enter the four-digit password, then touch the Set button.
Clear the password by pressing the Registered button and entering the password. The button changes back to Not registered. When changing a password, delete the old password before setting the new one.

6.8.9.3 Selecting no-communications mode

③ Use the options buttons to select whether or not to use no-communications mode.
If you select YES (no-communications mode) then communications errors will be suppressed, but it will not be possible to communicate with air conditioning units. Data displayed by the system will be meaningless.
This setting is provided for occasions when you want to register names or check the display layout even though air conditioners are not installed, not turned on, or otherwise not capable of communications.
Normally you should leave the NO (Normal) button selected, selecting YES (no-communications mode) only when it is necessary.

6.8.9.4 Buzzer sounds

④ When pressing an effective button during setting at Sound, the buzzer will sound (buzz).
When setting at No sound, even the alarm buzzer does not sound.

6.8.9.5 Initialization

⑤ Initialization erases all system data, including setting data and totals data.
A window like the following appears when you touch the Initialization button.

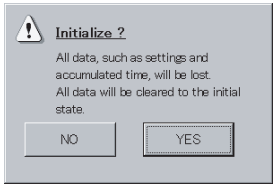

!! Do not make imprudent initialization.

Touch the Yes button to erase all data and return the system to the factory default state.

* Everyday, at 23:30 to 00:00, cut-off processing takes place and you cannot press the Initialization button then.

6 Using the System

Main 6 Sub 9

6.8.9.6 LCD auto off settings

⑥ The auto display off settings allow you to select a time after which the LCD display should be automatically turned off if there is no activity. The LCD display is turned on again when you touch it.

Settings: 5 minutes, 10 minutes, 15 minutes, 30 minutes, OFF (default: 30 minutes)

Turning the LCD display off when it is not in use saves power and can prolong the life of the display and backlight.

6.8.9.7 Calibrating touch panels

Humidity and temperature around the Intelligent Controller and its secular change may affect the point on the touch panel screen to deviate after use over a long period of time. In such a case, Calibrate the position.

⑦ Press Calibration and the next screen will be displayed.

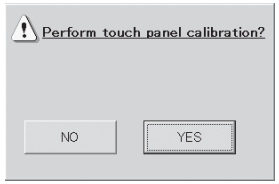

Now press Yes and a cross mark will appear in the center of the screen.
Keep pressing the center with a touch pen for a second or longer and stop pressing. Follow the same procedure of Upper left ⇨ Lower left ⇨ Lower right ⇨ Upper right.

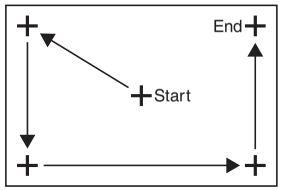

Finally the cross mark disappear and “New calibration settings have been measured.” will be displayed. Then press somewhere on the screen and the result of calibration will become effective to restore the original screen.
When 30 seconds passes without operating the screen, the calibration result is cancelled to restore the previous screen.

6 Using the System

Main 6 Sub 9

6.8.9.8 Power off button

⑧ **Always touch this button before powering the Intelligent Controller off.**

A message appears asking if you want to exit the program. Touch OK in the message. The system saves current data, and then displays a message "It is now safe to turn off the Intelligent Controller." Wait until this message appears before powering the system off. (If there is a large amount of data, several minutes may be required for this message to appear.)

!! Powering off before this message appears may cause malfunction or prevent booting.

6 Using the System

Main 6 Sub 10

6.8.10 WEB settings

Settings related to WEB such as the site name, mail settings, and network settings are possible.

Procedure

Select 6. Auxiliary settings in the main menu and 10. WEB settings in the sub menu.

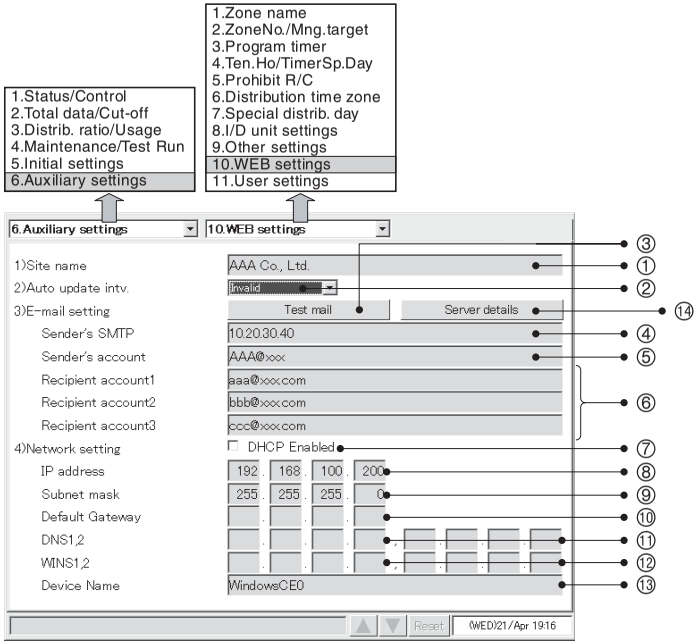

For items ①, ④ to ⑥, and ⑧ to ⑬, touch each input box and a soft keyboard will appear.

① Input the name of an optional site (within 40 characters).

② Set the automatic updating interval on the screen displayed on Web browser. When selecting "Invalid", data will not be updated until pressing the New button on the WEB browser screen.

③ Send the test mail.

④ Input the IP address (or domain name) of the mail (SMTP) server separately contracted.

⑤ Input an optional transmitter account name (mail address) (within 40 characters).

⑥ Input the receiver account name (mail address) (within 40 characters).

⑦ Select this check box to enable DHCP instead of using a fixed IP address. When DHCP is enabled, input for items ⑧ to ⑩ is disabled.

⑧ Input the Intelligent Controller IP address (or domain name). Refer to settings for other equipment (PC, router, etc.).

⑨ Input the Intelligent Controller subnet mask. Refer to settings for other equipment (PC, router, etc.).

⑩ Input the IP address of the default gateway connected to the Intelligent Controller as necessary.

6 Using the System

Main 6 Sub 10

⑪ Input the IP address of the primary and secondary DNS servers as necessary.
⑫ Input the IP address of the primary and secondary WINS servers as necessary.
⑬ Input the Intelligent Controller's device name (device ID) (within 15 characters).
(This is used to identify the Intelligent Controller when using DNS, for example.)
⑭ For details on the mail server settings, see "6.8.10.1 Detailed server settings".

* Refer to the network administrator for confirmation of detailed mail and network settings.
* If a Web browser (on PC) was used to change any of the settings from ⑦ to ⑬, the "Network settings have changed. Restart the unit." message appears and the Intelligent Controller restarts automatically.
* If you change the settings for items ⑦ and ⑬, the system restarts so that the new settings are reflected when you switch to other screens.
* You cannot set the IP address to "0.0.0.0" or "255.255.255.255". You cannot set the subnet mask, default gateway, DNS, or WINS to "0.0.0.0".

6.8.10.1 Detailed server settings

From the "WEB settings" screen (Main 6 Sub 10), clicking the "Server details" button displays the following screen.
This screen enables you to use the same and actual mail server settings to set up the Intelligent Controller as well. Therefore, check your mail server settings in advance and then apply the same settings to the Intelligent Controller.

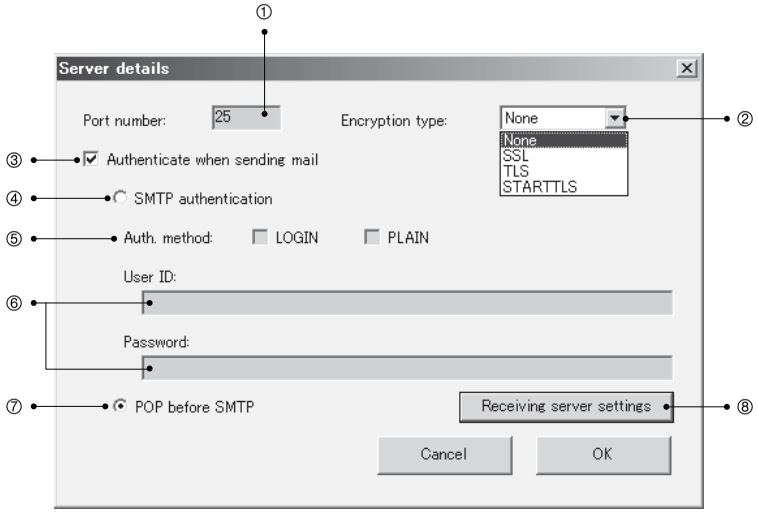

① Specify a port to use for sending mails, using a number within 6 digits.
② Select an encryption type to use for sending mails: "None", "SSL", "TLS", or "STARTTLS".
③ Select this check box if you want to perform authentication during mail transmission.
Settings ④ to ⑧ below are valid only when you have selected this check box.

6 Using the System

Main 6 Sub 10

④ Select this option if you want to perform SMTP authentication during mail transmission.
Settings ⑤ and ⑥ below are valid only when you have selected SMTP authentication.
⑤ Select either or all of the authentication methods: "LOGIN", and "PLAIN".
If both check boxes are selected, "LOGIN" takes priority.
If both check boxes are not selected, then SMTP authentication is not performed.
⑥ Specify a user ID and a password for authentication. For each of them, you can use within 50 characters.
⑦ Select this option if you want to perform POP before SMTP authentication when the mail server is receiving mails from the Intelligent Controller.
⑧ Click this button to set up the server if you want to perform POP before SMTP authentication.
See "6.8.10.1.1 Receiving server settings".

6.8.10.1.1 Receiving server settings

Clicking the "Receiving server settings" button on the "Server details" screen displays the following screen.
Use this screen to set up the server so that you can perform POP before SMTP authentication when the mail server is receiving mails from the Intelligent Controller.
Check your mail server settings in advance, and then apply the same settings here.

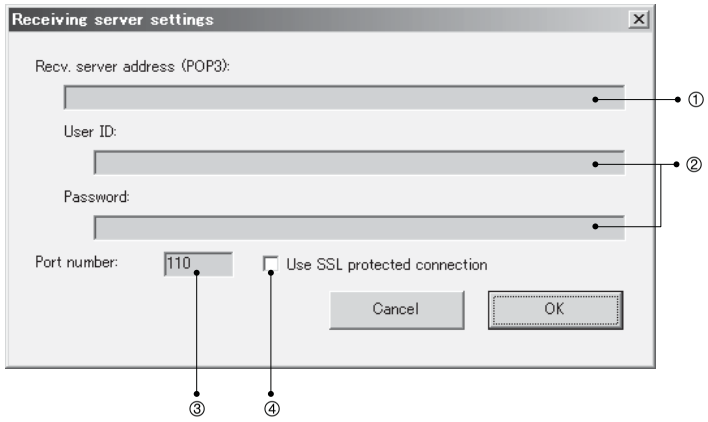

① Specify the address of the receiving server (POP3), within 40 characters.
If it is same as the sender's server, then set it to the same address of the "Sender's SMTP" setting on the "WEB settings" screen.
② Specify a user ID and a password for receiving mails. For each of them, you can use within 50 characters.
③ Specify a port to use for receiving mails, using a number within 6 digits.
④ Select this check box if you want to use SSL protected connection to receive mails.

6 Using the System

Main 6 Sub 11

6.8.11 User settings

The user ID, password, authority, and operatable tenant can be set.

Procedure

Select 6.Auxialiary settings in the main menu and 11.User settings in the sub menu.

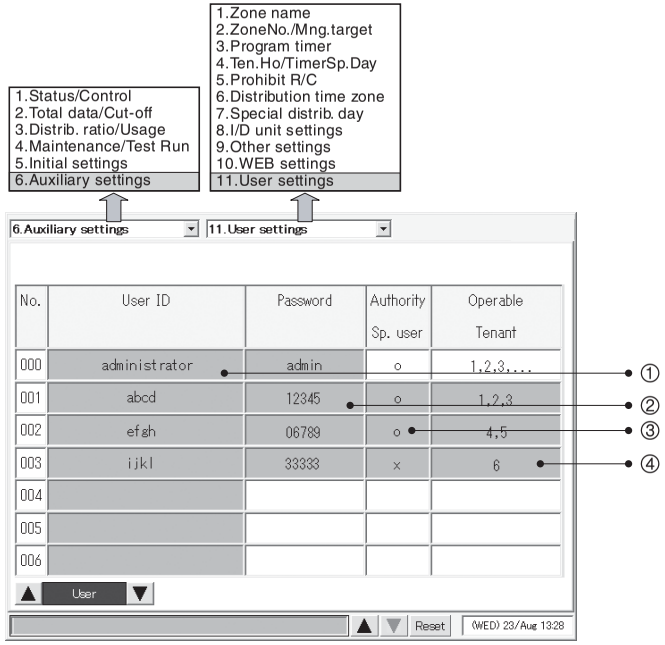

6 Using the System

Main 6 Sub 11

For items ① and ②, touch each input box and a soft keyboard will appear.

① Input an optional user ID (within 20 characters).

② Input an optional password (within 10 characters).

③ Users include three categories: “Administrator”, “Special user”, and “General user”.
No. 000 denotes “Administrator” (A special user solely admitted; its initial user ID: administrator).
No.001 or higher denotes “Special user” if authority is set to ❍, and “General user” if authority is set to ×. Depending on the user, the functions available from the Web differ as follows.

	Administrator	Special user	General user
Tenants affected	All tenants	Specified tenants	Specified tenants
Prohibit remote control settings	❍	❍	×
Screen 3-3 Download	❍	×	×
Screen 4-2 Alarm log	❍	❍	×
Screen 4-4 Sent mail log	❍	×	×
Screen 6-3 Program timer	❍	Confirmation only	Confirmation only
Screen 6-4 Ten.Ho/TimerSp.Day	❍	Confirmation only	×
Screen 6-5 Prohibit R/C	❍	Confirmation only	×
Screen 6-10 WEB setting	❍	×	×

④ When touching the input box, the following small screen is displayed, where you set operatable tenants by User ID.

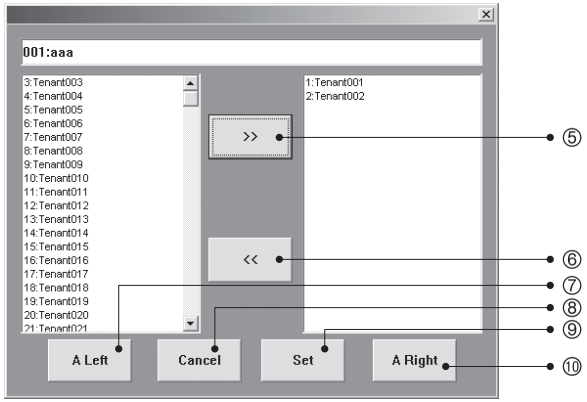

⑤ Register the tenant selected on the left side into the right side as the operatable tenant.

⑥ Delete the tenant selected on the right side from among the operatable tenants.

⑦ Select all the tenants on the left side.

⑧ Cancel this tenant setting change.

⑨ Make register setting for this user as the operatable tenant.

⑩ Select all the tenants on the right side.

6.9 System Configuration Changes

An alarm message like the following appears when a system configuration change (or the possibility of a configuration change) is detected.
If the system continues to operate after its configuration has changed, distribution ratios and other data will be totally inaccurate. For this reason, cut-off processing must be done with the system in the state before the change. The following message is displayed to ask you to confirm the processing.

Operation procedure for each case is as follows.

6.9.1 When a system configuration change detected

This alarm message is displayed in cases such as the following.

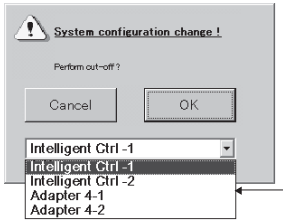

① "Check system Configuration" was made after removing the outdoor and indoor units.
② "Check system Configuration" was made after starting the unit and found that it was different from the previous one in configuration.
* "Configuration" includes not only the number of units and address but also indoor unit capacity, main/sub unit setting, and presence/absence of an electric heater.

Here you can see the link system where the configuration has been changed.

While this message is visible, no other operations can be performed except OK and Cancel.

Touch OK to perform cut-off processing with the system in the state before the change.
Touch Cancel if you do not need to perform cut-off processing.

Touch OK to check the new configuration.

If you select OK here, the current system configuration is re-checked and the results are confirmed.
If you do not need to do this, select Cancel.

If the system has changed because of a mistake, return the system to its former state and then touch Cancel. You should also touch Cancel here if you mistakenly selected Cancel in the previous message, even though the system cut-off processing should have been done. This returns you to the first alarm message, where you can perform cut-off processing.
While this message is visible, no other operations can be performed except OK and Cancel.

6.9.2 When system configuration may change

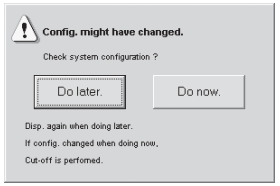

This alarm message is displayed in cases such as the following.
① The following "Detailed settings" were made from a local remote controller.
(for address, extension settings, indoor unit capacity, or presence/abesnce of an electric heater)
② Only confirmation of "Detailed setting" was made from a local remote controller.
③ Automatic address setting was carried out for an indoor or outdoor unit.
④ An additional indoor or outdoor unit was installed.
* "Configuration" includes not only the number of units and address but also indoor unit capacity, main/sub unit setting, and presence/absence of an electric heater.

While this message is visible, no other operations can be performed except Do later. or Do now..
When touching Do later., this window closes and other screen operations are made possible. However, after a while the message will be displayed again.

Touch Do now. to confirm whether the configuration has been actually changed.
When a configuration change was detected as a result of configuration confirmation, cut-off processing is automatically performed and the post-variation configuration is established. When there is no change in configuration, the screen exits configuration confirmation processing.

For example, imprudently pressing Do now. while a communication error message is displayed will result in an automatic cut-off processing to establish the current configuration. Therefore, take full care to avoid such a mistake.

When establishing a configuration without making cut-off processing, press Do later. to once close the screen and perform "Check system Configuration" using the 6-9 screen.
After this, proceed "Perform cut-off?" ⇨ "Cancel" ⇨ "Confirm the current system configuration?"⇨ "OK" in accordance with "6.9.1. When a system configuration change detected".

When no operation has been made on this screen for twelve hours or more, cut-off and post-variation configuration fixing processing are automatically carried out.

Caution

Imprudent cut-off processing and configuration fixing or neglecting them when necessary may cause a significant inconvenience in control.
When this alarm message is displayed, do not operate the system and contact the store where you purchased it or its service agency.
This message may be displayed also in inspecting the air conditioner. In such a case inform the person in charge of service of the fact.

7 Entering Text and Numbers

This system displays keyboard and numeric keypad windows when you need to enter names and numbers. The numeric keypad window appears when you need to enter numbers, and the keyboard window appears when you need to enter text.

7.1 Entering Numbers

A numeric keypad window like the one shown below appears when you need to enter a number, for example to register a password.

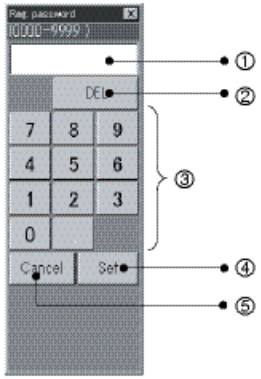

① Input field
Displays the number being entered.

② DEL button
Deletes digits in the number, from the right.

③ Numeric keys
Add the digit shown on the key face to the number in the input field.

④ Set button
Confirms the number in the input field.

⑤ Cancel button
Clears the numbers entered.

7.2 Entering Text

A keyboard window like the one shown below appears when you need to enter text, for example a tenant name.
To edit an existing text string, touch the character that you want to edit in the input field.

Alphanumeric, lowercase

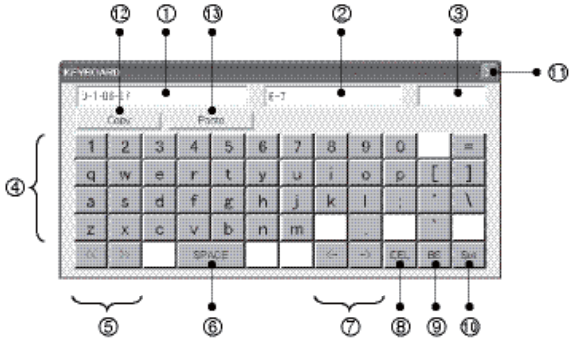

① Input field
Displays the text being entered.

② Information field
Displays information about the target of the operation (for example, the tenant number when a tenant name is being entered).

③ Input mode
Displays the current input mode (type of characters).

④ Character input buttons
Input characters.

⑤ Input mode selection buttons
Select the type of characters to input.

⑥ Space button
Inputs a space.

⑦ <- and -> buttons
Move the input cursor to the left and right in the input field.

7 Entering Text and Numbers

⑧ DEL button
Deletes the character to the right of the input cursor.

⑨ BS button
Deletes the character to the left of the input cursor.

⑩ Set button
Enables the entered character string.

⑪ Close button
Closes the keyboard window.

⑫ Copy button
Copies text displayed in the input field. You can also copy portions of the text by dragging the touch pen over the desired portion.

⑬ Paste button
Pastes the text copied with the Copy button to the input field in which the cursor is currently located.

Alphanumeric, upper case

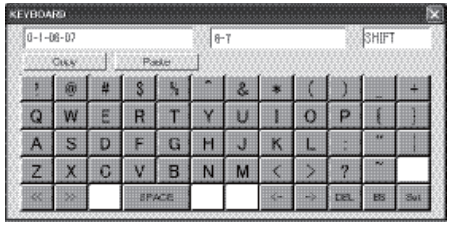

8 Connection of External Signals

When connecting external signals, refer to the Installation Instructions (end of this manual) for detailed information about the electrical specifications.

8.1 Pulse Meter Input

You can measure energy usage by connecting pulse meters (gas, fuel, and electricity meters).
If you do not need to view information about energy usage, there is no need to install pulse meters.

1) Input locations
The communications connector panel on the side of the intelligent controller or on an optical communication adaptor connected to the intelligent controller:
P1 (No.7), P-COMM (No.6) …… Gas meter, fuel meter
P2 (No.8), P-COMM (No.6) …… Electricity meter 1
P3 (No.9), P-COMM (No.6) …… Electricity meter 2

* The above are factory default settings. If necessary, you can change the type of pulse meter (power meter or gas meter).
See “6.3.5 Making pulse meter settings” for more information.

2) Operation
Each pulse is counted.
The amount of energy consumed per pulse (m^3, kWh, liters) must be defined by “Main 5 Sub 4 Pulse meter setting”.
See “6.3.5 Making pulse meter settings”.

8.2 All Stop Input

You can stop all connected units automatically by connecting external signals (for example, from fire-alarm detectors.)
All stop input is available only for managed ("target") units. It does not affect units which have been designated as not managed ("Not target") or individually operated ("Indiv Op").

1) Input location
   The communications connector panel on the side of the Intelligent Controller or on an optional communication adaptor connected to the Intelligent Controller:
   DI1 (No. 17), DI-COMM (No.16)

2) Operation
   While the input is asserted ON, a stop signal is sent periodically (once per minute) to all indoor units.

3) Display

   This message disappears when normal status is restored.

8.3 All Start Input

You can start all connected units automatically by connecting external signals.
All start input is available only for managed ("target") units. It does not affect units which have been designated as not managed ("Not target") or individually operated ("Indiv Op").

1) Input location
   The communications connector panel on the side of the Intelligent Controller or on an optional communication adaptor connected to the Intelligent Controller:
   DI2 (No.18), DI-COMM (No.16)

2) Operation
   When inputting ON from OFF, the operation signal will be transmitted to all the indoor units.

When both "All stop input" and "All start input" are set ON simultaneously, only "All stop input" is enabled.

8.4 All-Unit Alarm Output

An external signal is output when an alarm or error occurs in any connected unit.
This signal can be used by alarm monitors and other equipment.

1) Output location
   The communications connector panel on the side of the Intelligent Controller or on an optional communication adaptor connected to the Intelligent Controller:
   DO1 (No.14), DO-COMM (No.13)
2) Operation
   The signal goes ON when an alarm or error occurs, and goes OFF when normal status is restored.

8.5 All-Unit Operation Output

An external signal is output when any connected unit is operating.

1) Output location
   The communications connector panel on the side of the Intelligent Controller or on an optional communication adaptor connected to the Intelligent Controller:
   DO2 (No.15), DO-COMM (No.13)

2) Operation
   The signal goes ON when any connected unit (including Interface adaptor) is operating, and goes OFF when all units are stopped.
   Operation during alarms and errors is included.

9 TERMS

This section explains some of the terms used in this manual.

■ **Adaptor address (No. 0 set on Intelligent Controller, No. 1 to 7 set on communication adaptors)**
An adaptor address is the address assigned to an optional communication adaptor.

■ **Link system address (No. 1 to 2, fixed)**
A link system is a collection of indoor units and outdoor units connected to a single inter-unit control wire. Up to two link systems each can be connected to the Intelligent Controller and to an optional communication adaptor.

■ **Outdoor unit system address (No. 1 to 30 for each link system, set on outdoor unit side)**
An outdoor unit system is collection consisting of one outdoor unit and the indoor units connected to that outdoor unit. A single link system can contain up to 30 outdoor systems.

■ **Indoor unit address**
Up to 64 indoor units can be connected in one link system.
The Intelligent Controller system supports up to two link systems connected to the Intelligent Controller only (128 indoor units), or four link systems (256 indoor units) when an optional communication adaptor is connected.
Indoor unit addresses, central control addresses, and unit names are applied to indoor units.

- **Indoor unit address** (No.1~/for each outdoor unit system, set on indoor unit side)
  An indoor unit address is a unique number within an outdoor unit system.
  These numbers are assigned to each indoor unit, including units subject to group control.
  These numbers are the smallest unit of totals calculation and distribution calculation.
- **Central control address** (No.1 to 64 for each link system, set on Intelligent Controller and other central control equipment)
  A central control address is a unique number within a link system. It is shared with other central control equipment (system controllers, multi controllers, etc.)
  This is the same address used in group control.
- **Unit name** (set on Intelligent Controller)
  This is the same name used in group control.
  It is the smallest unit of operation, monitoring, and timer operations.

■ **Distribution group number (No. 1 to 8, set on Intelligent Controller)**
A distribution group is made up of one or more tenants. The total of the distribution ratios in the group is 100%. The Intelligent Controller system supports up to 8 distribution groups. GHP, PAC, and HOT units cannot be mixed in a single distribution group.

■ **Tenant number (No. 1 to 256 set on Intelligent Controller)**
A tenant is a collection that is the object of distribution calculations (or operation and monitoring). It is made up of one or more indoor units. The system as a whole supports up to 256 tenants.

■ **Zone number (No. 1 to 128, set on Intelligent Controller)**
A zone is unrelated to distribution. It is a range for performing all-unit operation, monitoring, and timer operation. GHP, PAC, and HOT units can be mixed in a zone. The system as a whole supports up to 128 zones.

10 Calculating air conditioner distribution

The Intelligent Controller calculates energy (electricity and gas) distribution ratios utilizing the accumulated working time (T/S ON/OFF) or the capacity value of the indoor unit.
* T/S: Thermostat

10.1 Calculating simple distribution

Parameters as listed below are used to calculate simple distribution:

- **RHHi**: accumulated operation time for indoor unit i (High fan speed)
- **RHi**: accumulated operation time for indoor unit i (Medium fan speed)
- **RLi**: accumulated operation time for indoor unit i (Low fan speed)
- **SHHi**: T/S ON accumulated time for indoor unit i (High fan speed)
- **SHi**: T/S ON accumulated time for indoor unit i (Medium fan speed)
- **SLi**: T/S ON accumulated time for indoor unit i (Low fan speed)
- **Pi**: Capacity of indoor unit i (in kW)
- **k**: Weighing factor for power consumptions as T/S ON and OFF
- **aHH**: Weighing factor for High fan speed
- **aH**: Weighing factor for Medium fan speed
- **aL**: Weighing factor for Low fan speed
  * Accumulated operation time = T/S ON accumulated time + T/S OFF accumulated time

Index of indoor unit i power/gas consumptions is calculated.
Here, “TEi” and TGi” denotes the power and gas consumption indexes of the indoor unit i, respectively.

When “Object of power distribution calculation” is “T/S ON + OFF time”:
The power consumption index is calculated using “Accumulated operation time” and “T/S ON accumulated time”; the gas consumption index using “T/S ON accumulated time”

- For GHP:
  TEi = (RHHi x aHH + RHi x aH + RLi x aL) x Pi ——— ①
  TGi = (SHHi x aHH + SHi x aH + SLi x aL) x Pi ——— ②
- For PAC:
  TEi = { (RHHi x aHH + RHi x aH + RLi x aL) /k +
  (SHHi x aHH + SHi x aH + SLi x aL)} x Pi ——— ③
  TGi = 0 ——— ④

When “Object of power distribution calculation” is “T/S ON time”:
Both the power and gas consumption indexes are calculated using “T/S ON accumulated time”.

- For GHP:
  TEi = (SHHi x aHH + SHi x aH + SLi x aL) x Pi ——— ⑤
  TGi = (SHHi x aHH + SHi x aH + SLi x aL) x Pi ——— ⑥
- For PAC:
  TEi = (SHHi x aHH + SHi x aH + SLi x aL) x Pi ——— ⑦
  TGi = 0 ——— ⑧

- Weighing by wind speed is not carried out for models with their speed set only as High or only as High and low.
- Distribution ratios are not calculated when you have chosen not to perform distribution ratio calculations. (See “6.3.2 Setting the date, cut-off date, and distribution ratio calculation method”)

10 Calculating air conditioner distribution

Calculate **electricity/gas usage index of entire distribution group**

Let “TOTALe” be the electricity usage index of entire distribution group,
and let “TOTALg” be the gas usage index of entire distribution group.
Let “m” be the number of indoor units in the distribution group.

TOTALe = TE1 + TE2 + ··· + TEm
TOTALg = TG1 + TG2 + ··· + TGm

Calculate **electricity/gas usage distribution ratio of indoor units**
Let “REi” be the electricity usage distribution ratio,
and let “RGi” be the gas usage distribution ratio.

REi (%) = TEi / TOTALe × 100
RGi (%) = TGi / TOTALg × 100

Calculate **electricity/gas usage distribution ratio of tenant j**
Let “NEj” be the electricity usage distribution ratio of tenant j,
and let “NGj” be the gas usage distribution ratio of tenant j.
Let “n” be the number of indoor units of tenant j.

NEj (%) = RE1 + RE2 + ··· + REn
NGj (%) = RG1 + RG2 + ··· + RGn

Distribution ratios are rounded at the third decimal place and shown to the second decimal place.

* The following table shows which of the formulas ① to ⑧ on the previous page are used by the two distribution modes.

		T/S ON+OFF time distribution mode	T/S ON time distribution mode
GHP	Electricity	①	⑤
	Gas	②	⑥
PAC	Electricity	③	⑦
	Gas	–	–
HOT	Electricity	③	⑦
	Gas	②	⑥

See “About distribution ratios in 12 Supplementary Information-2”.

10 Calculating air conditioner distribution

10.2 Calculating air conditioner energy usage

Calculate **electricity/gas usage of entire distribution group**

Electricity usage for distribution group = Pulse meter (electricity) count value × Pulse unit amount (kWh)
Gas usage for distribution group = Pulse meter (gas) count value × Pulse unit amount (m^3)

Calculate **electricity/gas usage of indoor units**

Electricity usage for indoor unit = Electricity usage for distribution group × Electricity consumption distribution ratio for indoor unit
Gas usage for indoor unit = Gas usage for distribution group × Gas consumption distribution ratio for indoor unit

The usage is **rounded** to two decimal places and displayed.

See ”About distribution ratios and energy usage” in “12 Supplementary Information-2”.

10 Calculating air conditioner distribution

10.3 Calculating loaded distribution

Data flow

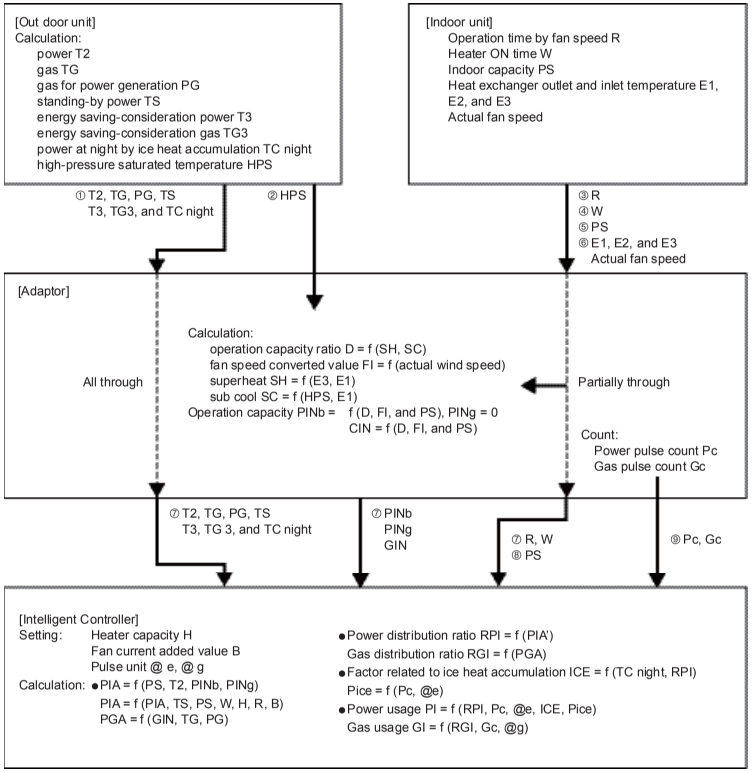

* "f" means function. For example:
Operation capacity ratio D = f (SH, SC)
means that the operation capacity ratio is calculated using superheat SH and sub cool SC.

Calculation parameter	Simple distribution	Loaded distribution
Indoor unit capacity (kW)	❍	❍
Indoor unit operation time	❍	❍
Indoor fan speed ratio (high, medium, low)	❍	❍
Outdoor unit operation ratio (Power: detected using CT, Gas: neuro-calculation)	×	❍
Standing-by power and various heater powers	×	❍
Indoor unit loaded ratio (Calculated using the values detected by multiple internal thermo sensor of indoor unit)	×	❍ (Degree of superheat)

❍:parameters considered in distribution calculation
×:parameters not considered in distribution calculation

11 Supplementary Information-1

★ IMPORTANT ★

- Microsoft and Windows CE are trademarks of Microsoft Corporation in the United States and other countries.
  Other products names are trademarks or registered trademarks of their respective holders, or copyrights of their respective holders.
- Duplication of all or part of the software and documentation of this product without the express consent of the holder of the rights to the above, and transfer of the software to another party, are prohibited by law.
- We will not be liable for any loss, lost profits, or any incidental damages due to use of this product or the supplied software. We will not be liable to any claim based on a third-party claim.
  Even in the case of errors in calculations of distribution ratios, and so on, we will not be responsible for any remedies.
- The software supplied with this product may not be used on any other equipment.
- This product and the supplied software are subject to change without notice.
  The contents of this manual are subject to change without notice.
- We will not be liable for any violation of the rights of any third party stemming from use of information in this manual, or for violation of other rights.

12 Supplementary Information-2

■ Powering the system off
Always use the following procedure to power the Intelligent Controller off. Otherwise, the internal files may become corrupted and the system may become unable to be booted.

Touch the Power off button in the "Other settings" screen (Main Sub).

⇩

Touch the OK button in the message box which appears to ask if you want to exit the program.

⇩

Wait until a message appears to inform you that "It is now safe to turn off the Intelligent Controller." (*) and then power the system off.
(*Several minutes may pass before this message appears.)

■ Caution for when backup data is restored
When the system reboots immediately after a restore, "Converting data" may continue to be displayed for a long period of time (estimated maximum period of time: 1 hour 30 minutes). Be sure not to turn off the power of the unit during that time. The internal files may become corrupted and the system may become unable to be booted. If the system becomes unable to be booted, the internal data needs to be restored so ask your dealer or service provider to restore the data.

■ Air conditioner limitations
Some types of air conditioners are limited in the settings which they support.
For example, cooling-only air conditions cannot be set to heating.
Floor-type models typically support only high fan speeds.
Ceiling mounted models do not have flaps, and therefore cannot change the fan direction.
You should be aware of the limitations of the air conditioner models in your system.
For more information, contact your dealer or service provider.

■ Standby power (for simple distribution)
The Intelligent Controller performs distribution calculations on the basis of indoor unit operating time. Therefore it does not count power consumed while under are stopped (on standby).
For example, if no units are operated over the course of a month, no standby power consumption is distributed to any tenant. However if a unit is operated for even one minute, then all of the standby power consumption is distributed to the corresponding tenant.
For loaded distribution, distribution is made with standing-by power added.

■ W Multi GHP outdoor unit data is displayed as "Reference unit".
Because the reference unit changes depending on operating conditions, the data displayed by the Intelligent Controller also changes.
Outdoor unit data is data such as "number of operations" and "operating time".

■ Only an alarm code is displayed in the notification bar and alarm log display.
The content of an alarm can very for different models, even if the alarm code is the same. Consult the documentation of the various models to determine the content of the alarm.

■ Because of data transmission delay, the totals and distribution data displayed by the Intelligent Controller for different time zone (regular hours, out of hours, special days) may not be counted in a completely accurate fashion.
For details, see "6.6.3 Time zone totals and distribution".

■ Filter cleaning signs and oil exchange signs are updated every 7 minutes (maximum).
Operating time totals and distribution data are updated every 18 minutes. Electric heater ON time is updated once an hour.

■ Cut off processing for the previous day is performed every day for a few minutes after 00:00 a.m. The system will not respond to user input during this processing.

12 Supplementary Information-2

■ After the settings of an indoor unit are changed from the Intelligent Controller, the display may revert temporarily to the former settings. This is more likely to occur with all-unit operations. The cause is communications delay, not any malfunction in the system. If you wait a few minutes, the display will show the correct information.

■ Errors occurred while operating during a thunder storm or because of electromagnetic interference.
Power the Intelligent Controller off and then on again. (Refer to "Powering the system off" stated on the previous page)
As a rule, the Intelligent Controller should be powered off only in cases such as the above.
Correct management of air conditioning is not possible when the Intelligent Controller is powered off.

■ About distribution ratios and energy usage
The formulas used by the Intelligent Controller to calculate air conditioning distribution ratios and energy usage are only approximations. They normally do not yield the same amounts that appear on bills from electric and gas utilities.
Depending on operating conditions, there may be a margin of error between distribution ratios and actual air conditioning amounts.
There may also be a small margin of error between the following, due to the rounding algorithms used in distribution ratio calculations.
- "Distribution ratios of tenants in a group" and "100.00%"
- "Total of distribution ratios" and "Overall tenant distribution ratio"
- "Total of usage by each tenant" and "Total usage indicated by pulse meters"
- "Total of usage during regular hour, out of hours, and special days time zones" and "Total of all hours time zones"

The Intelligent Controller does not measure energy use directly. It calculates energy distribution ratio based on the inferred load ratio of each indoor unit. The results of the calculations should be regarded as approximations.

■ About operating time totals
Air conditioning distributions and air conditioner operating times are calculated only for periods in which the Intelligent Controller is powered on and in which there are no communications errors between the Intelligent Controller and the air conditioners.
Therefore, no totals are accumulated for times when the Intelligent Controller is powered off or in which communications errors occur.
You should be aware that errors in distribution ratios will become larger if conditions like the above continue for a longer period of time.

■ Setting the current date and time
The current date and time should be set on a regular basis, since the system clock can gain or lose up to about two minutes per month.

■ Touch panel operations are not possible at the following times.
- While the system is booting
- During connection checks
- Under cut-off processing
- During PC Card access (backup, restore)

■ About passwords
Passwords should be recorded and saved in a safe place. They should never be disclosed to third parties.
If you forget your password, contact your dealer or service provider.

■ Flickering on the screen
This may occur occasionally. It is due to data refreshing and is not a malfunction.

12 Supplementary Information-2

■ About Interface adaptors
You can use Interface adaptors to connect equipment that can be turned on and off (fans, room air conditioners and so on) to the Intelligent Controller.
However, note that the following limitations apply.
For details, refer to the documentation of the equipment or contact your dealer or service provider.

▶ Central control is supported for the following operations only.
- Start/stop
- Remote control prohibition (start/stop only)

Timer settings are supported, but settings other than "start/stop" and "remote control prohibition" are ignored. Remote control prohibition is possible only when prohibition signal output from the Interface adaptor has been connected to the equipment. Even in this case, the only operations that can be prohibited are start and stop.

▶ For each screen from Main 1 Sub 1 to Main 1 Sub 5, it appears in light purple during the ON operation.

▶ Alarm display
Alarm details are not shown.
The “C12” code is displayed (meaning Interface adaptor all-unit alarm).
However, this is possible only when a Interface adaptor alarm input signal has been connected.

▶ About air conditioning distribution
① Indoor unit fan speed data
Total operating times by fan speed are fixed at high speed. (Units are treated as if they always operated at high speed, even if the thermostat ON signal is connected to the unit.)
② Electric heater ON time
Total electric heater ON time is not displayed.
③ Indoor unit capacity values
These cannot be read automatically. Set them as kW values in the "I/D unit settings" screen (Distribution is not performed if they are not set.)
④ Product types
When connected via Interface adaptors, the system cannot distinguish PAC and GHP units.
You need to set the type as well when you set the indoor unit capacity.
(Refer to “Tenant name/Distribution group” screen Main 5 Sub 3)
⑤ This applicable only to simple distribution. No loaded distribution can be made.

▶ As long as it conforms to the contact specifications of the Interface adaptors, any type of equipment can be connected to the Intelligent Controller. However, you should avoid connecting equipment whose operation can have grave consequences for life or property.

■ When only one centralized control unit is installed in a system without remote controller, if the centralized control unit is damaged, the air conditioner(s) may become inoperable, or other troubles may occur. To avoid this problem, we recommend that you install multiple centralized control units.

■ If the indoor unit address is changed and replaced with another indoor unit address that has a different number after starting distributed operation, distribution calculations may become incorrect causing malfunctions to occur. Please note that we shall not be responsible for compensation in such cases.

13 Troubleshooting

Before requesting service, check the following items.
Do not attempt to service the Intelligent Controller yourself. Doing so can be dangerous.

Symptom	Cause
Nothing appears on the screen when the computer is turned on.	• Is the power cord connected? • Is the power switch set to on?
Timer operation does not work.	• Is timer operation set to the target unit? Operation of a selected timer does not start if the setting is not set the target unit. • Does the setting match the current date and time?If the date and time do not match, operation can start at an unexpected time. (See “6.3.2 Setting the date, cut-off date, and distribution ratio calculation method”)
The distribution ratio is always 100%.	• Check the group settings and tenant settings. • Distribution rate calculations always result in 100% if there is only one tenant registered in a distribution group, or if there is only one indoor unit in a tenant.
The power goes off at odd times.	• The screen may be blank because of the power-saving auto off function. The Intelligent Controller is still powered on. Touch the screen to restore the display. • Regardless of the selected auto off time, the screen may be turned off when the Intelligent Controller boots.
There is an alarm message in the notification bar at the bottom of the screen that will not go away.	• The message displays the unit where the alarm occurred, and the alarm number. Inform your dealer or service provider about the content of the message.
Backing up to a PC Card does not work.	• Data can be backed up only to the special PC Cards (option) for the Intelligent Controller. Backup to other PC Card types is not possible.
It takes a long time after an operation for the screen to be updated.	• A certain amount of time may be required depending on the state of communications with the connected air conditioners. Please wait until all of the information is received.
LCD display	• In rare cases there may be a dot on the screen which is always on or always off. This is not a malfunction. Due to the nature of LCD displays, there may be some color bleeding in certain areas because of variations in temperature and so on. This is normal and not a malfunction.
Nothing happens when an operation button is pressed.	• Over extended use, the touch positions and display positions on the touch panel may get out of alignment. (⇨ “6.8.9.7. Calibrating touch panels”)
When local remote control operation is prohibited on the Intelligent Controller, the Intelligent Controller is not able to start/stop operation of a malfunctioning air conditioner.	• Emergency operations until our service person arrives: Power off the Intelligent Controller and externally installed communication adaptor; re-power on the indoor unit. Operation with the local remote control will be possible. However, this cannot be done in a remote control free system.
A power outage occurred. When it ended, the equipment did not come on automatically according to program timer settings.	• The Intelligent Controller does not power on equipment automatically by program timer after a power outage. The setting for the next programmed time will be executed when the time arrives.
The Intelligent Controller cannot detect a single indoor unit. Or it cannot find all of them.	• Try using the “Check configuration” button in the “Other settings” screen (Main 6 Sub 9).

13 Troubleshooting

Symptom	Cause
One of the following messages is displayed and the unit does not start. • Application error !! • DiskErr • CF error !!	• Contact the store where you purchased the system or our service agency.
A message, “Diskxx access error”, is displayed. (xx is a number from 1 to 4)	Press the [Check] button to close, and press [Reset] to the left of the clock display. If the same message appears again, consult your local dealer or service representative.

14 Maintenance

■ **Unplug the power cord before cleaning the Intelligent Controller.**

The system has high-voltage connectors and other dangerous components. Always power the system off and unplug the power cord before cleaning it.

■ **Use a neutral solvent**

To clean the control panel and touch panel, use a soft cloth slightly moistened with a neutral solvent.
Do not use volatile liquids such as benzene or thinner, and do not use polishing power or pesticides.
Doing so can damage painted surfaces and the surface of the touch panel.

■ **Avoid direct contact with water**

Do not allow water to contact the product directly.
Insulation will be impaired, which may result in damage or electrical shorts.

■ **Do not disassemble**

Do not disassemble the Intelligent Controller.
Doing so is extremely dangerous. It may damage the unit or cause electrical shock.

■ **Check the mounting of components**

Several times a year, check to make certain that the mounting of components such as the control panel has not been weakened by rust or corrosion.

15 Specifications

Product number		CZ-256ESMC2
External dimensions		(H) 240 ×(W) 280 ×(D) 138 mm
Method of installation		Front door of control panel
Maximum number of connectable units		Maximum 128 air conditioners (indoor units) Maximum 256 air conditioners (indoor units) with communication adaptor connected
Timer precision		± Approx. 2 minutes/month (normal temperature)
Timers	Setting unit	1 minute
	Operation	50 times/day 50 types of daily timer / 50 types of weekly timer
	Program cycle	1 week
Temperature / humidity ranges for use		5°C to 40°C / 20% to 80%
Display		6.5-inch TFT color LCD display (640 x 480 pixels), with backlight
Power requirements		Single-phase 100-240 V ~ 50/60 Hz
Power consumption		Max. 30 W
Weight		3.4 kg

16 Installation (Electric) and Service Instructions

Safety Precautions

- Before conducting installation or electrical work, be sure to carefully read these "Safety Precautions" and follow them carefully.
- The precautions given in this manual consist of specific "Warnings" and "Cautions". Be sure to follow these precautions, as they provide important safety related information. The labels and their meanings are as described below.

⚠ Warning	This refers to a hazard or unsafe procedure or practice which can result in severe personal injury or death.
⚠ Caution	This refers to a hazard or unsafe procedure or practice which can result in personal injury or product or property damage.

⚠ Warning

- Be sure to arrange installation at the dealer where the system was purchased or use a professional installer. Electric shock or fire may result if an inexperienced person performs any installation or wiring procedures incorrectly.
- Carefully follow these Installation (Electric) and Service Instructions when installing the unit. Electric shock or fire may result if the unit is not installed correctly.
- Electrical installation should be performed by qualified electrician, in accordance with the provisions of the Technical Standards for Electrical Installations, local regulations for indoor wiring, and these Installation (Electric) and Service Instructions. Be sure to use a dedicated electrical circuit. Insufficient electrical circuit capacity may result in electric shock or fire.
- Use the specified cables for the electrical connections, and connect the cables securely. Fasten the cables securely so that the cables will not exert force on the connection terminals. Insecure connections or fastening may result in overheating or fire.
- The installation location requires the use of a circuit breaker. Failure to use a circuit breaker may result in electric shock or fire.
- Circuit breaker must be incorporated in the fixed wiring in accordance with the wiring regulations. The circuit breaker must be an approved 10-16 A, having a contact separation in all poles.

⚠ Caution

- When performing electrical installation, discharge any accumulated static electricity to ground before touching the unit.

Supplied parts

Part number	Part name	Quantity	Part number	Part name	Quantity
①	Small pan head bolt (M4 x 10)	4	②	Nut (M4)	4
③	Flat washer	4	④	Cable tie	6
⑤	Operation Manual	1			

Specifications

Rated voltage ····· 100 - 240 V~, single phase
Rated frequency ····· 50/60 Hz
Power consumption ····· 30 W max.
Operating temperature ··· 5° to 40° C
Operating humidity ····· 20 to 80% (non-condensing)

1 Cautions regarding the design of the control box

Control box machining diagram **External dimensions**

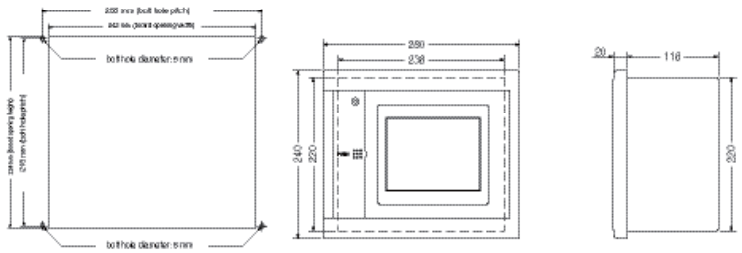

16 Installation (Electric) and Service Instructions

Take the following into consideration when designing the control box:

1. To ensure sufficient airflow for cooling, provide air vents (holes, slots, etc.) on the upper, lower, left and right sides of the box, as shown in the figure below. (Be sure not to clog the ventilation hole when setting.)
   Ensure that the temperature inside the control box does not exceed 40 °C.

Control box example

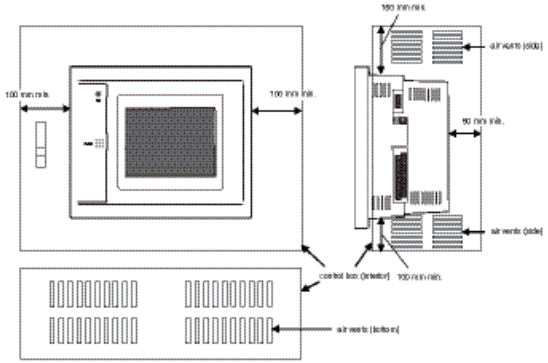

2. Keep the power and communications signal lines as far apart as possible (at least 50 mm, if cabled inside the control box) to reduce the effects of electrical noise.

Wiring example

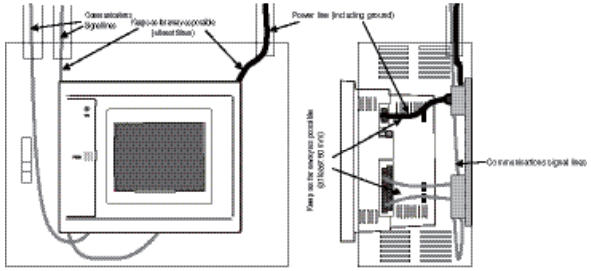

2 Mounting

Caution

- Do not route communications signal lines or input / output signal lines close to power supply lines, or routing them through the same conduit. Doing so may result in malfunction.
- Mount the unit far away from potential noise sources.
- Do not mount the unit where it could get wet, or in areas of high humidity.
- Do not mount the unit where it could be subject to excessive vibration or shocks.
- Mount the unit inside a control box.

(1) Remove the two pan-head bolts from the lower sides and bottom of the front panel.
(2) Mount the controller unit to the control box using the four supplied bolts, washers, and nuts.
(3) Replace the front panel.

Mounting diagram

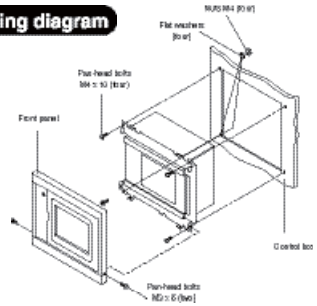

16 Installation (Electric) and Service Instructions

3 Wiring

Always shut off the power supply (breaker) before installing or uninstalling.

Connection terminals

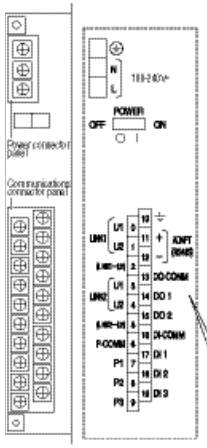

(1) Power supply connection

Connect the power supply to the commercial power mains (100 to 240 V AC), using a dedicated circuit.

Connect the power supply lines to the L and N power supply terminals (the power supply neutral to the N terminal).

Connect an earth ground line to the ⊕ power supply terminal.

Attach the power supply terminal board cover.

Firmly secure the power lines using the supplied cable tie.

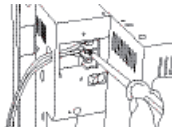

(2) Signal connection

- Connect indoor and outdoor signals using 0.5 - 2.0 mm² two-conductor cable.
- Overall length of each signal line should be 1 km or less.
- Use the shielded wire for inter-unit control wiring.
- Do not run signal lines through the same conduit as power supply lines, use the same cable as the power supply, or run close to the power supply lines (maintain at least 30 cm separation, if cabled outside the control box).
- Do not run the LINK1 and LINK2 signal lines through the same conduit, use the same cable for wiring, or run the signal lines close together.
- Earth the shield wire of the Inter-unit control wire (U1-l

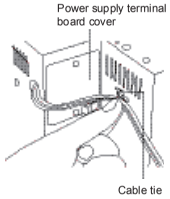

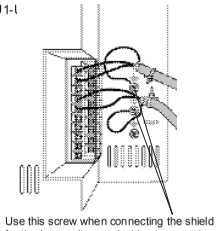

Terminal names and uses

ADAPT +/-	:	Communication adaptor control wire (RS-485)
LINK 1/2	:	Inter-unit control wire (HBS)
P1	:	Pulse meter input (Gas flow meter, fuel meter)
P2 - 9	:	Pulse meter input (Electricity meter)
DI 1	:	All stop input
DI 2	:	All start input
DI 3	:	reserved
DO 1	:	All alarm output
DO 2	:	All operation output

Basic wiring diagram

Wire up the communication adaptor control wire and Inter-unit control wire as shown in the figure below.

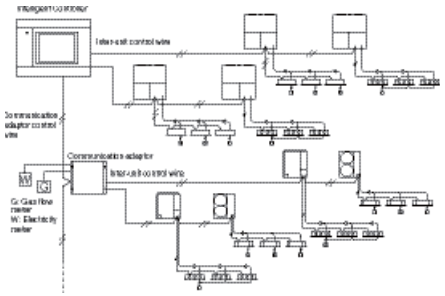

* When connecting link systems (inter-unit control wires), always connect beginning with LINK1 and LINK2 on the Intelligent Controller. Up to 4 link systems can be connected.

Wiring procedure

- Inter-unit control wire (no polarity)
  Connect signal terminals 0 and 1 (LINK1) to the Inter-unit control wire terminals of an indoor or outdoor unit. If using two link systems for connection, connect signal terminals 3 and 4 (LINK2) in the same manner.
- Communication adaptor control lines (note + and - polarity)
  Up to seven external communication adaptors can be connected to the control unit (see figure at left). However, a maximum of four links is supported. Be sure to follow the communications adaptor Installation Instructions when connecting the adaptors. Make sure that power lines are not connected to the communication adaptor terminals or Inter-unit control wire terminals.

* If the power voltage is accidentally applied to the Inter-unit control wire terminals, a fuse will blow to protect the controller board. If this happens, disconnect the power line, and connect the Inter-unit control wire to the spare U2 terminal. (The other signal line can stay connected to the U1 terminal.) The spare U2 terminals are right next to the main U2 terminals.

Use terminal 2 (LINK1-U2) instead of terminal 1
Use terminal 5 (LINK2-U2) instead of terminal 4

16 Installation (Electric) and Service Instructions

4 Connecting to external equipment

(1) External system inputs (no-voltage contact point static)

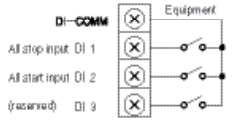

(2) External system outputs (no-voltage contact point static)

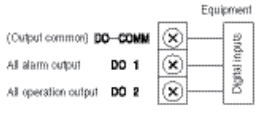

(3) Pulse meter inputs (no-voltage contact point pulse)

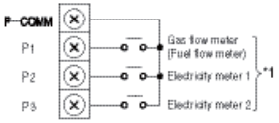

*1 Factory default setting (alterable)

- Minimum pulse width 100 msec
- Minimum pulse interval 1 sec

- Keep the input and output signal line lengths to under 20 meters. For distances greater than this, install a standalone communication adaptor, or use a relay.
- For use in areas that may be susceptible to electrical noise, use two-conductor shielded cable (with one line grounded), with a cross-section of 0.5 mm² or greater.
- Do not apply external voltages to the input terminals.
- The input terminals use a sensing current of about 10 mA at 5 V DC.
- The output terminal allowable contact voltage and current are 30 V DC, 0.5 A.

5 Power switch

The Intelligent Controller has a power switch.If the LCD is blank after connecting power, check the position of the power switch.

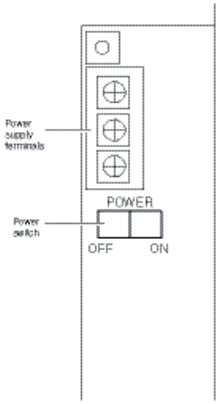

6 Circuit board diagram

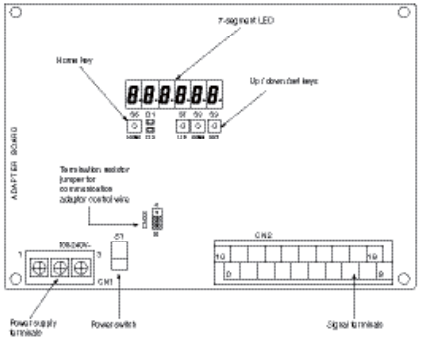

* Ordinarily, there is no need to change any settings on the Intelligent Controller board.

7 Verify the system configuration, make necessary settings

① Turn on power to all air conditioner units.
② Turn on power to the Intelligent Controller.
③ Set the date and time on the Intelligent Controller and verify the system configuration.
④ Following the display on the Intelligent Controller, verify the number of units connected.
⑤ Perform the necessary settings. **Be sure to set the central control address.**
* See the Operation Manual for details.

8 Educating the customer

- Give the Operation Manual to the customer.
- Explain the operation to the customer, following the explanations given in the Operation Manual.

8. Intelligent Controller (CZ-256ESMC2)

Memo

Centralized Control System

CZ-256ESMC2 INTELLIGENT CONTROLLER

Operation Manual

Access and Operation by Web Browser

Thank you for choosing the CZ-256ESMC2 Intelligent Controller.
Before using the system, be sure to read this manual carefully.

Contents

1. Computer Environment Requirements 1
2. Log-in 1
3. Screen Display and Operation 2
3-1. [Each Tenant] Screen 2
3-2. [Each Tenant Details] Screen.....5
3-3. [All Units] Screen.....5
3-4. Distribution Ratio/Usage: Data Download Screen 6
3-5. Alarm Log Screen.....7
3-6. Mail Send Log Screen.....9
3-7. Program Timer Screen.....10
3-8. Tenant Holiday/ Timer Special Day Screen.....12
3-9. Prohibit Remote Control Screen 13
3-10. WEB Settings Screen.....14
4. Supplementary Information.....18

Access and Operation by Web Browser

Accessing the Intelligent Controller from your computer allows you to monitor/operate air-conditioning equipment using a Web browser.

1. Computer Environment Requirements

In order to use the web browser of your computer to connect to the Intelligent Controller and monitor/operate air-conditioning equipment, the following environment requirements must be met.

Supported browser : Internet Explorer 6.0 or later
Java applet : Sun Microsystems Java Plugin Ver 1.4.2 or later
Screen resolution : 1024 × 768 recommended

2. Log-in

To log in to the Intelligent Controller, enter the following into the address bar of the web browser:

http://[Intelligent Controller address]/SACWWW/index_[language code].asp

For example, if the Intelligent Controller address is 192.168.0.2 and you want to connect to the English page, enter:

http://192.168.0.2/SACWWW/index_en.asp

If the DNS is used and ID name (device name) of the Intelligent Controller is “WindowsCE0”, enter:

http://WindowsCE0/SACWWW/index_en.asp.

The language codes are as follows.

English	: en	French	: fr	German	: de	Italian	: it
Portuguese	: pt	Spanish	: es				
Chinese	: zh	Japanese	: ja	Korean	: ko		

This will cause the web browser to connect to the Intelligent Controller, and a screen such as shown below appears.
Enter the user ID and password set for the Intelligent Controller to log in.

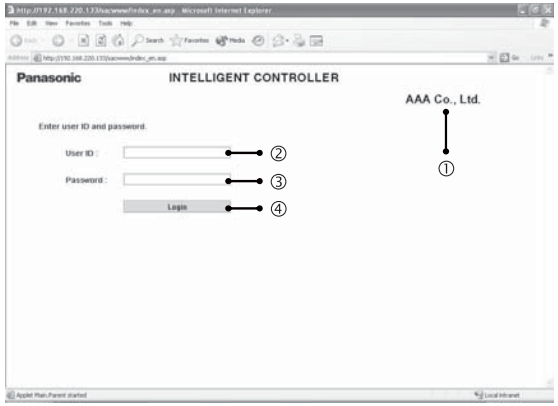

① Shows the site name that was set for Intelligent Controller.
② Enter the user ID that was set for Intelligent Controller.
③ Enter the password that was set for Intelligent Controller.
④ Click the **Login** button.

3. Screen Display and Operation

3-1. [Each Tenant] Screen

After you log in to the Intelligent Controller, or when you use the menu to select [1. Status/Control : 1. Each tenant], a screen such as shown below appears. (Screen details may differ depending on the user logged in.)

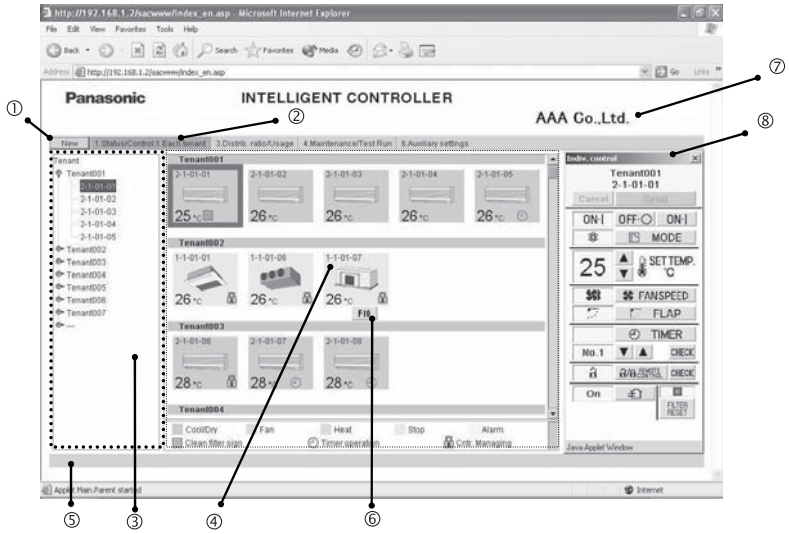

① **New button**
Updates the screen to the latest information.

② **Menu**
(The menu may differ depending on the user logged in. The following menu appears when logged in as an administrator.)
Lets you select one of the following screens.

★ Administrator Menu

New	1.Status/Control:1.Each tenant	3.Distrib. ratio/Usage	4.Maintenance/Test Run	6.Auxiliary settings
	1.Each tenant 2.Each tenant details 5.All units			

★ Special User Menu

New	1.Status/Control:1.Each tenant	4.Maintenance/Test Run

★ General User Menu

New	1.Status/Control:1.Each tenant

③ **Tenant list**
Shows the indoor unit and tenant structure currently accessed by the Intelligent Controller in a list.
Select indoor units by clicking different parts of the list.
Clicking on the part highlighted in the screen example above will select the individual indoor unit, while clicking on the tenant name (Tenant001, Tenant002, etc. in the example) will select all indoor units for that tenant. Clicking on the top of the list (Tenant in the example) will select all indoor units of the site.
Only the tenants that can be operated by the user permission used to log in (administrator, special, general)are displayed.

④ **Icon display area**
Shows icons for indoor units connected to the Intelligent Controller.
Clicking on an icon whose frame is shown in reverse will select that unit. Clicking on a tenant name will select that tenant.

If an Interface Adaptor is used, the icon display becomes light purple during the ON operation.

⑤ **Notification column**
Shows information about the connection status of web browser and Intelligent Controller, etc.

⑥ **Alarm code display**
Shows the alarm code as a tooltip when the cursor is moved over the icon of the indoor unit for which the alarm is occurring.

⑦ **Site name**
The “Site name” set in the Intelligent Controller appears.

⑧ **Remote control window**
Shows the Remote control window. When this window has been closed, clicking on the indoor unit or making another selection will bring it up again.

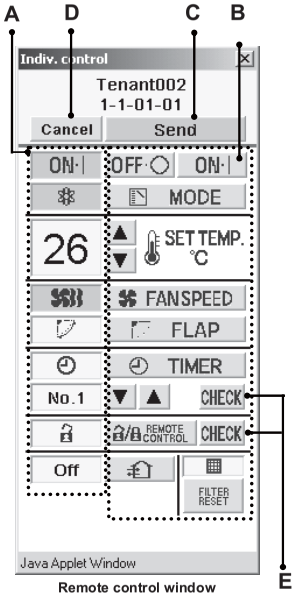

Remote control window

A Status/Control screen section
Shows the status of the indoor unit and the operation condition.
When a control operation is performed, the background color of the respective field changes and the Send button becomes available. Clicking the Send button will send all operation steps performed up to this point to the Intelligent Controller. If you instead click the Cancel button or perform a step such as selecting another indoor unit, operation steps performed up to this point will be canceled.

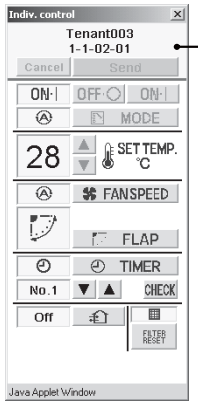

Remote control window for general user

B Control section
Shows controls for possible operation steps such as start/stop switching, operation mode selection, temperature selection, fan speed setting, fan direction setting etc.
If the logged in user has only general user privileges, buttons for restricted operation steps will be grayed out (inactive).
The REMOTE CONTROL and CHECK buttons will not be displayed.

C Send button
Sends the changes made to the Intelligent Controller.

D Cancel button
Cancels the changes made.

E CHECK buttons
Used to check the timer setting and remote control prohibition setting status.
(See “3-7. Program Timer Screen” and “3-9. Prohibit Remote Control Screen”.)
Clicking the Return button will return the display to the previous screen.

3-2. [Each Tenant Details] Screen

When you use the menu to select [1. Status/Control : 2. Each tenant details], a screen such as shown below appears. (Screen details may differ depending on the user logged in.) Operation principles for this screen are similar to those of the “3-1. [Each tenant] screen”.

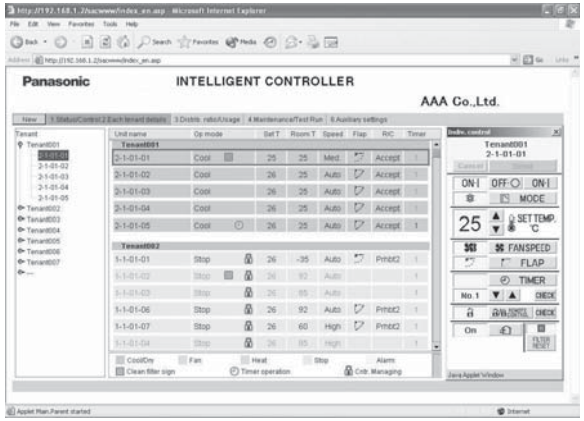

3-3. [All Units] Screen

When you use the menu to select [1. Status/Control : 5. All units], a screen such as shown below appears. (Screen details may differ depending on the user logged in.) A maximum of 256 indoor units are displayed in 1 screen. Operation principles for this screen are similar to those of the “3-1. [Each tenant] screen”.

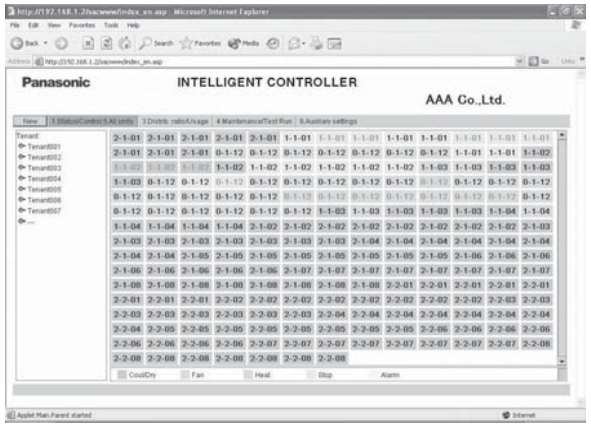

3-4. Distribution Ratio/Usage: Data Download Screen

When you use the menu to select [3. Distrib. ratio/Usage : 3. Download] while logged in as an administrator, a screen such as shown below appears.
You can download files by selecting them and clicking the “Download” button.

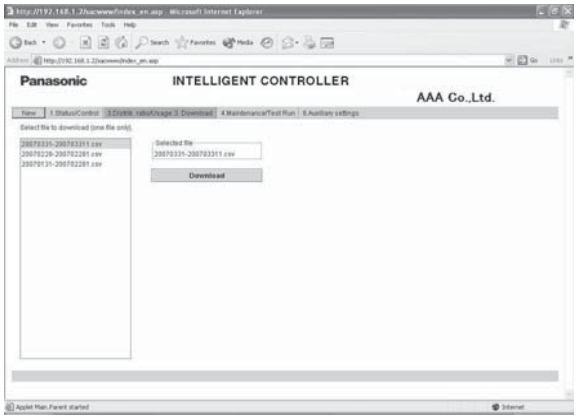

A cut-off data file appears for each piece of cut-off data that appears on the Intelligent Controller unit. Be aware, however, that the dates that appear on the Intelligent Controller unit appear as file names on this screen.
For example, cut-off data that appears as “01/Apr-30/Apr” on the Intelligent Controller will appear as “20070401-200704301.csv” on this screen.

When the following message appears after clicking the “Download” button, select “Open” or “Save”.

- “Open” ..... Open the selected CSV file using spreadsheet software.
- “Save” ..... Select a folder and save the CSV file.

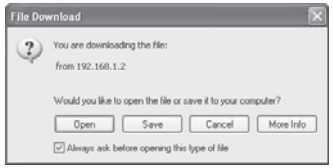

3-5. Alarm Log Screen

When you use the menu to select [4. Maintenance/Test Run : 2. Alarm log] while logged in as an administrator or special user, a screen such as shown below appears.
When an indoor unit is selected in the tree section, the previous 14 occurrences are displayed.
(Same as the display on the Intelligent Controller.)

“I/D alarm log”, “O/D comm. error log”, and “Adapter alarm log” can be selected from the drop-down list.

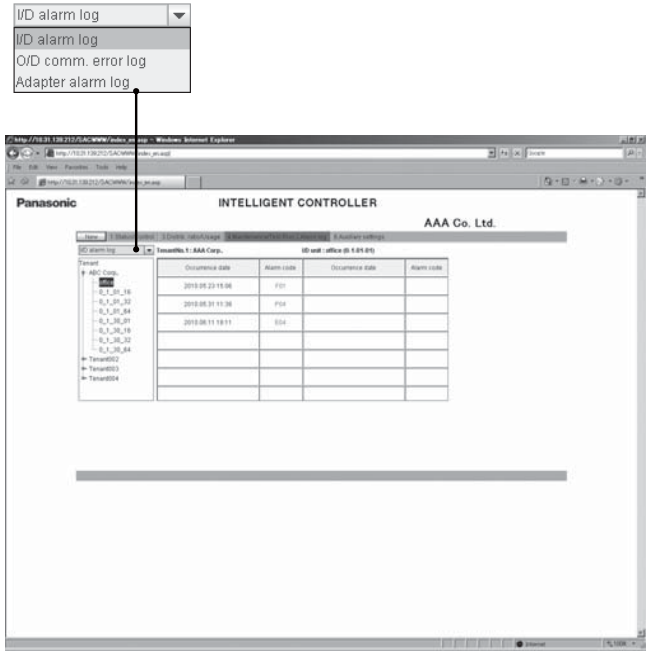

[O/D comm. error log] logs the history of errors in communication between the outdoor unit and the Intelligent Controller or the Communication Adaptor.

[Adapter alarm log] logs the history of warnings as determined by the Intelligent Controller or the Communication Adaptor.
(Duplicate adaptor addresses, communication error between the Intelligent Controller and adaptor, etc.)

3-6. Mail Send Log Screen

When you use the menu to select [4. Maintenance/Test Run : 4. Sent mail log] while logged in as an administrator, a screen such as shown below appears.

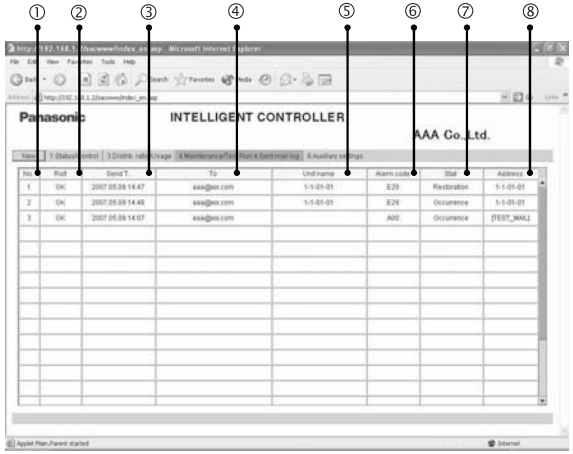

① No.
The entry numbers for the sent mail log. With a maximum of 20 (No. 1 to 20) possible entries, the newest entries appear at the top of the list. When the number of entries exceeds 20, entries are deleted starting with the oldest.
As up to three mail recipients can be specified, up to three log entries can be recorded for one alarm occurrence.

② Rslt
“OK” appears when an alarm mail is sent properly, and “NG” appears when sending fails.

③ Send T.
The date and time the alarm mail was sent (or sending was attempted).

④ To
The recipient address the alarm mail was sent to. If the address is too long, only part of the address may appear.

⑤ Unit name
The name of the indoor unit for which the alarm occurred.

⑥ Alarm code
The code for the alarm that occurred.

⑦ Stat
“Occurrence” appears when a notification of an alarm occurrence is sent, and “Restoration” appears when a notification of an alarm restoration is sent.

⑧ Address
The address of the indoor unit for which the alarm occurred.
The address follows the format, “adaptor number - link number - system (outdoor) number - indoor number”.
When a test mail is sent, “TEST_MAIL” appears.

3-7. Program Timer Screen

When you use the menu to select [6. Auxiliary settings : 3. Program timer] while logged in as an administrator, or use the "CHECK" button for timer operation in the remote control window, a screen such as shown below appears. (As non-administrator users can only confirm settings and not configure them, the "Cancel" and "Send" buttons only appear when logged in as an administrator.)

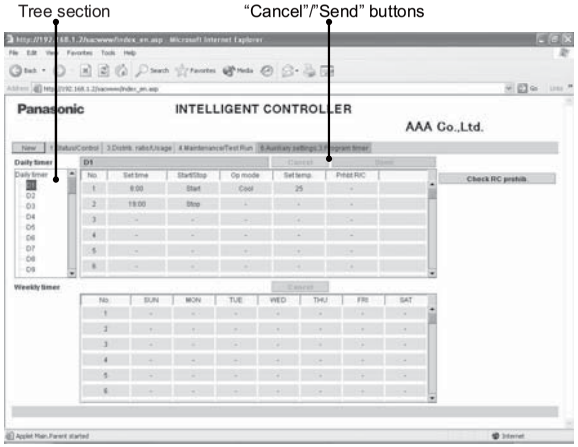

When the daily timer number is selected in the tree section, the current setting status is displayed. Click the desired setting item, and you can select the setting from the drop-down list as shown below.

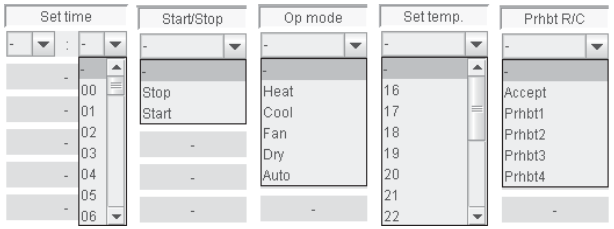

Drop-down lists are also displayed for the weekly timer in the same way as the daily timer number.

You can only configure daily timer settings one number (D1, D2, etc.) at a time. If you attempt to switch to D2 settings in the middle of configuring D1 settings, for example, the message "Send for each daily timer." appears.

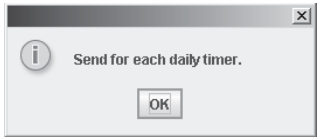

In such a case, apply or cancel the current settings by clicking the "Send" or "Cancel" button, respectively, before configuring the next daily timer number.

For details on the settings, refer to the operation manual for the Intelligent Controller.

The "Check RC prohib." button appears in the above screen when logged in as an administrator or special user. When you click on this button, a screen such as shown below appears.

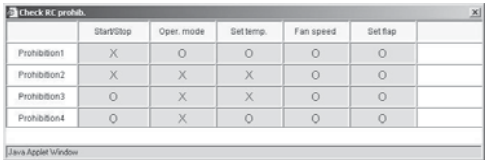

3-8. Tenant Holiday/Timer Special Day Screen

When you use the menu to select [6. Auxiliary settings : 4. Ten.Ho/TimerSp.Day] while logged in as an administrator, a screen such as shown below appears.

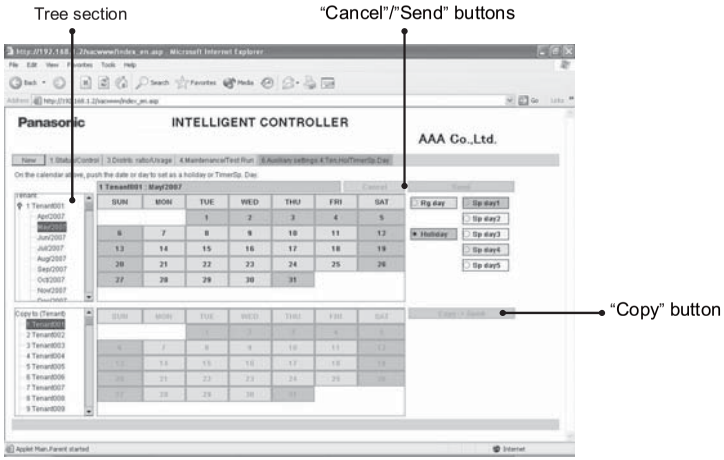

You can only configure tenant holiday/timer special day settings one tenant at a time. If you attempt to switch to Tenant002 settings in the middle of configuring Tenant001 settings, for example, the message "Send for each tenant." appears.

In such a case, apply or cancel the current settings by clicking the "Send" or "Cancel" button, respectively, before configuring the next tenant.
To copy changed settings, click the "Send" button and apply the settings before copying.

For details on the settings, refer to the operation manual for the Intelligent Controller.

3-9. Prohibit Remote Control Screen

When you use the menu to select [6. Auxiliary settings : 5. Prohibit R/C] while logged in as an administrator, or click the "CHECK" button for prohibit remote control in the remote control window, a screen such as shown below appears. (As non-administrator users can only confirm settings and not configure them, the "Cancel" and "Send" buttons only appear when logged in as an administrator.)

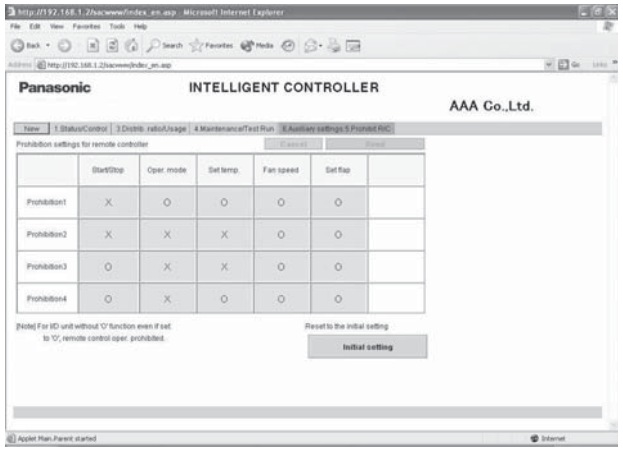

For details on the settings, refer to the operation manual for the Intelligent Controller.

3-10. WEB Settings Screen

When you use the menu to select [6. Auxiliary settings" : 10. WEB settings] while logged in as an administrator, a screen such as shown below appears.

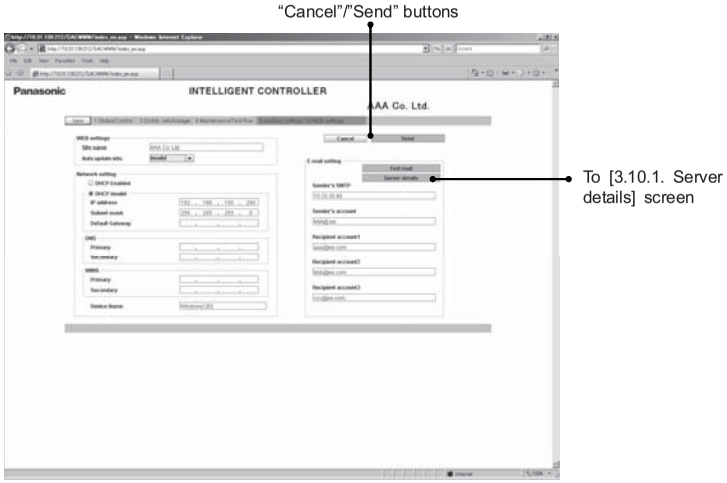

For details on the settings, refer to the operation manual for the Intelligent Controller.

Input values have the following restrictions.

Setting Item	Input Range	Input Character Limitations
Site name	Up to 40 characters	One-byte "=" is prohibited
IP address (each block)	Numbers 0 to 255	"0.0.0.0" and "255.255.255.255" are prohibited
Subnet mask	Numbers 0 to 255	"0.0.0.0" is prohibited
Default Gateway		
DNS (Primary, Secondary)		
WINS (Primary, Secondary)		
Device Name	Alphanumeric characters, "–", and "_" Up to 15 characters	First character must be alphabetic character. "-" and "_" are prohibited as ending characters
Sender's SMTP	Up to 40 alphanumeric characters and symbols	Symbols are "@" "." "_" ":" only
Sender's account		"=" is prohibited
Recipient account 1 to 3		

If a value that is outside the input range or input limitations is set, the window below appears.

If the network settings have been changed when the "Send" button is clicked, the window below appears. Always check there is no problem restarting the Intelligent Controller unit.

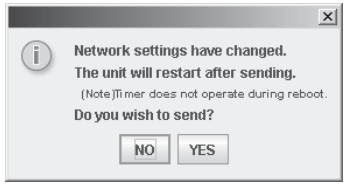

When "YES" is clicked for submission, the screen changes as shown below, and the Intelligent Controller unit restarts.

When a mail test is sent, the window below appears when the mail settings have been changed.

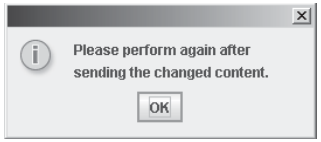

In this case, either click the “Send” button to enable the mail setting changes or click the “Cancel” button to disable the changes, and then send the mail test again.

If the Intelligent Controller unit is processing (check configuration, cut-off, backup, etc.), this screen cannot be displayed or updated, mail test cannot be sent, and setting change “Send” cannot be performed.
If the Intelligent Controller unit is displaying the initial setting screen (main menu 5) or the Settings screen (main menu 6), setting change “Send” cannot be performed. In either case, the following window appears.

3-10-1. Server details

When you click the “Server details” button from the [WEB settings] screen, a screen such as shown below appears.

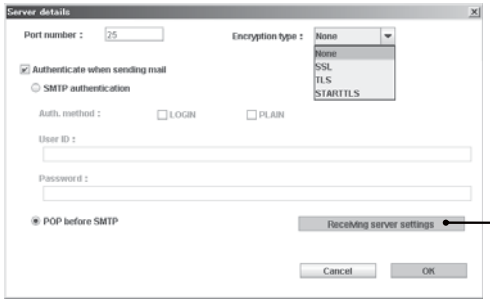

To [3-10-1-1 Receiving server settings] screen

For details on the settings, refer to the operation manual for the Intelligent Controller.

Input values have the following restrictions.

Setting Item	Input Range	Input Character Limitations
Port number	Numbers 0 to 999999	
User ID	Up to 50 alphanumeric characters and symbols	
Password		

3-10-1-1. Receiving server settings

When you click the “Receiving server settings” button from the [Server details] screen, a screen such as shown below appears.

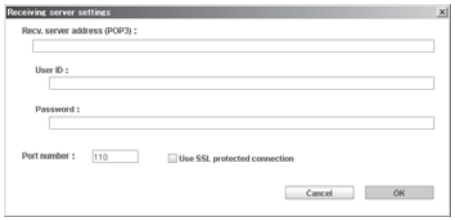

For details on the settings, refer to the operation manual for the Intelligent Controller.

Input values have the following restrictions.

Setting Item	Input Range	Input Character Limitations
Recv. server address (POP3)	Up to 40 alphanumeric characters and symbols	Symbols are “@” “.” “_” “:” only
User ID	Up to 50 alphanumeric characters and symbols	
Password		
Port number	Numbers 0 to 999999	

4. Supplementary Information

■ When connecting the Intelligent Controller via Internet, consider implementing network security measures, such as a firewall.

■ Error Messages

Error	Cause	Remedy
System configuration change! (when logged in with Administrator privileges) 	The system configuration of the Intelligent Controller has changed.	This is a warning message. Wait a moment and resume operation.
Intelligent Controller is now processing, please wait. Please try later. 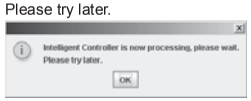	The Intelligent Controller is applying settings. Access from the Web is heavy.	If configuring settings with the Intelligent Controller, switch to a non-settings screen (such as screen 1-n). Wait a moment and resume operation.
Communication error 	The Intelligent Controller was turned off while connected, or a cable was unplugged or the network failure.	Try the operation again. Verify that the Intelligent Controller is turned on, and that the network wiring connections are correct.
Invalid user ID 	The entered user ID is different from the user ID registered on the Intelligent Controller.	Verify the user ID that was registered to the Intelligent Controller.
Wrong password 	The entered password is different from the password registered on the Intelligent Controller.	Verify the password that was registered to the Intelligent Controller.
All Stop! All units were forced to stop. Do not operate until unit operation resumes. 	The external all stop input is switched on for the Intelligent Controller unit.	When the external all stop input is changed to OFF, the message disappears. After changing to OFF, wait for the message to disappear.

Instructions for the Electrical Installer (CZ-CFUNC2)

For your safety

- Read the following instructions carefully, and carry out secure installation and electrical work.
- The precautions given in this manual consist of specific "Warnings" and "Cautions". They provide important safety-related information. Be sure to strictly observe all safety procedures. The labels and their meanings are as described below.

⚠ Warning	This symbol refers to a hazard or unsafe procedure or practice that can result in severe personal injury or death.
⚠ Caution	This symbol refers to a hazard or unsafe procedure or practice that can result in personal injury or product or property damage.

* After installation is completed, perform a test run to check for operating trouble. Explain operating procedures to the customer following the central control device Operation Manual and then request the customer to store this Instructions for the Electrical Installer together with the central control device Operation Manual.

⚠ Warning

- Be sure to arrange installation by the dealer where the system was purchased or by a professional installer. Electric shock or fire may result if an inexperienced person performs any installation or wiring procedures incorrectly.
- Be sure that this unit is securely installed in accordance with this Instructions for the Electrical Installer. Electric shock or fire may result if any installation or wiring procedures are incorrectly performed.
- Only a qualified electrician should attempt to connect this system, in accordance with the instructions in this manual. Insufficient electrical circuit capacity or incorrect installation may cause electric shock and fire.
- Use the specified cables for the electrical connections, and connect the cables securely. Run and fasten the cables securely so that external forces or pressure placed on the cables will not be transmitted to the connection terminals. Overheating or fire may result if connections or attachments are not secure.
- Depending on the installation conditions and location, an earth leakage breaker may be required. If an earth-leakage breaker is not installed, there is a danger of electric shock or fire.
- The installation location requires the use of a circuit breaker. Failure to use a circuit breaker may result in electric shock or fire.
- Circuit breaker must be incorporated in the fixed wiring in accordance with the wiring regulations. The circuit breaker must be an approved 10-16 A, having a contact separation in all poles.

⚠ Caution

- Ground yourself to discharge static electricity before performing any wiring.

1 Installing

Note

- Do not run the indoor/outdoor communication lines, input/output lines, and power cables through the same conduit, or twist those cables together, or place the cables near one another. It can cause malfunction.
- Install the main unit away from any sources of electrical noise.
- Avoid installing in any locations where the unit may come into contact with water, or in any extremely humid locations.
- Avoid installing in any location that is subject to excessive vibration or physical impacts.

(1) After determining the attachment position, secure the installation hardware as shown in the dimensions diagram. If the included screws will not work for the installation, prepare appropriate screws (such as metric ones) for use at the site.
(2) Attach the main unit and fasten the installation hardware as illustrated.
(3) If the installation hardware is loose or appears like it will fall out, remove the upper case on the unit and secure with screws in the failsafe screw holes.

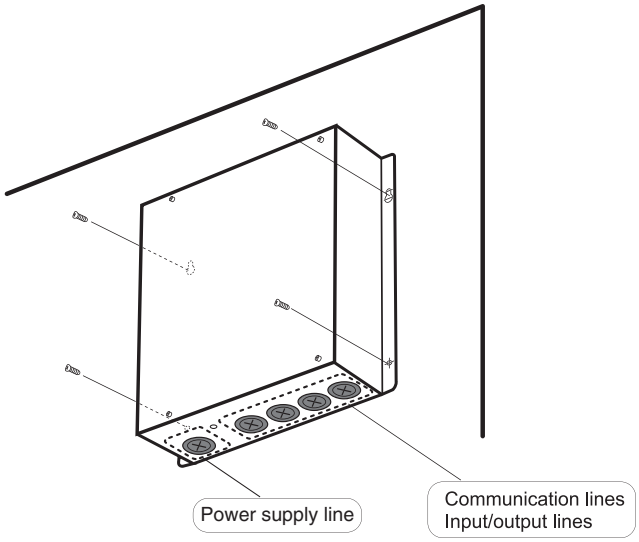

9. Communication Adaptor (CZ-CFUNC2)

2 Wiring

Always shut off the power supply (breaker) before installing or uninstalling the Communication Adaptor.
Remove the two screws at the front of the unit and remove the upper case.

Arrangement of the terminal board and switches

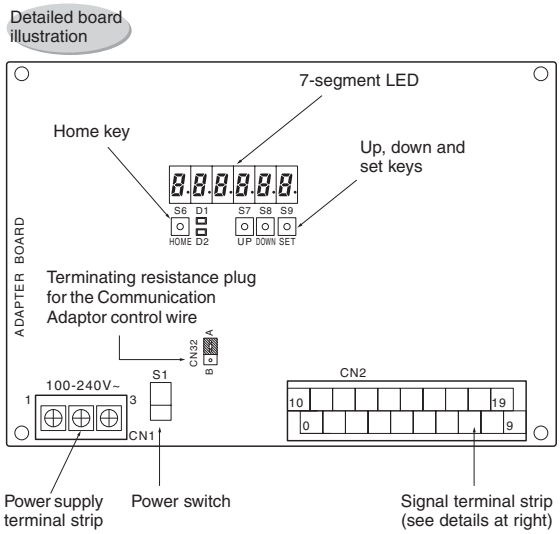

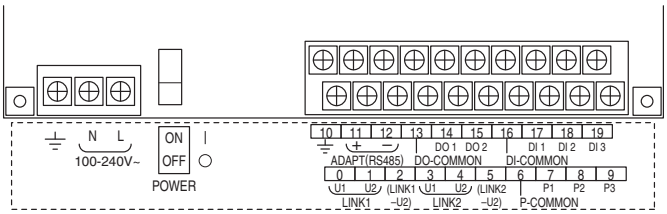

ADAPT +/- :	Communication Adaptor control wire (RS-485)
LINK 1/2:	Inter-unit control wiring (HBS)
P1:	Pulse meter inputs (gas flow meter and fuel flow meter) (*)
P2 and P3:	Pulse meter input (power flow meter) (*)
DI1:	All stop input (*)
DI2:	All operation input (*)
DI3:	Reserved
DO1:	All alarm output (*)
DO2:	All operation output (*)

(*) Input/output function when connecting to the Intelligent Controller

(1) Connecting the power supply

The unit can use AC power sources between 100 and 240 V.
Connect the power supply to terminals 2 (N) and 3 (L) on the power terminal strip CN1. (Connect the AC neutral end to N.)
Connect the ground line securely.

(2) Connecting the communication line

- For the Communication Adaptor control wires, use only two-conductor **shielded wire** with a cross-section between 0.5 and 2.0 mm^2 (MVVS or CPEVS).
- Be sure to ground only one end of the shielding.
- The overall length of each line should be 1 km or less.
- Do not run the communication line through the same conduit as the power supply, use the same cable as the power supply, or run close to the power supply line (maintain at least 30 cm separation).
- Do not run the LINK1 and LINK2 signal lines through the same conduit, use the same cable for wiring, or run them close together.
- Use different communication and power cables so they can be differentiated visually.

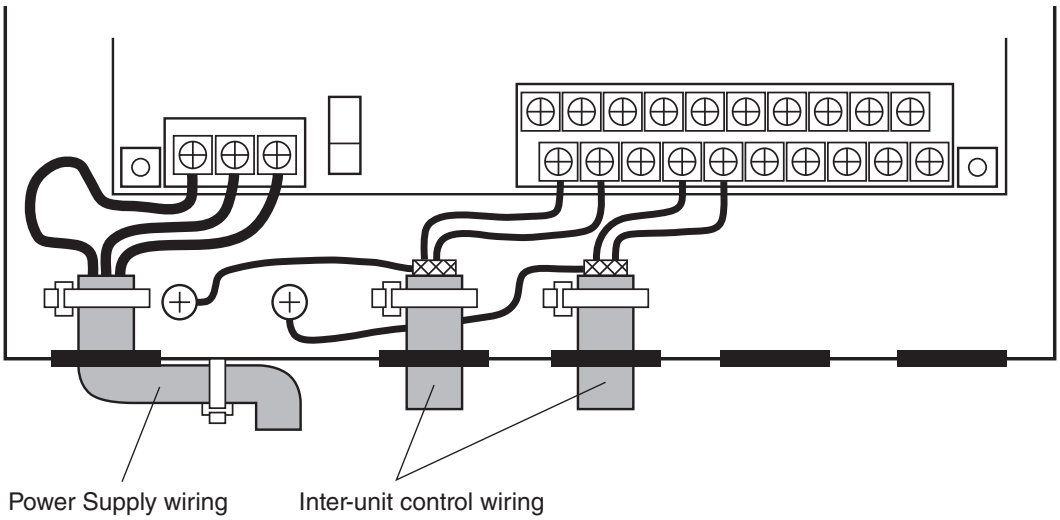

9. Communication Adaptor (CZ-CFUNC2)

Basic wiring diagram (Example using an Intelligent Controller)

Wire up the Communication Adaptor control wire and Inter-unit control wiring as shown in the figure below.

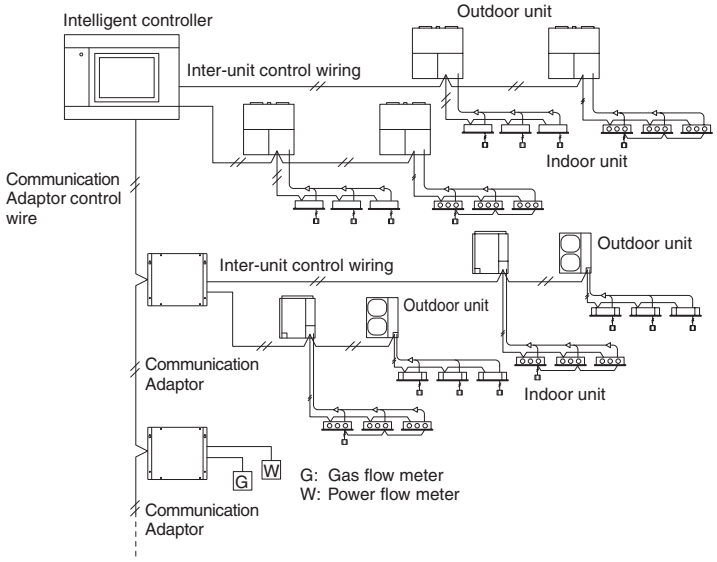

Wiring procedure

- **Inter-unit control wiring**
  Use the shielded wire for inter-unit control wiring.
  Connect terminals 0 and 1 (LINK1) on the Communication Adaptor signal terminal strip CN2 to the inter-unit control wiring terminals of the indoor or outdoor unit. There is no polarity.
  If connecting two inter-unit control wiring systems, connect terminals 3 and 4 (LINK2) on CN2 in the same manner.

- **Communication Adaptor control wire**
  Connect terminals 11 and 12 (ADAPT + and -) on the Communication Adaptor signal line terminal strip CN2 with the same terminals on the other Communication Adaptor. **The terminals have polarity.** Connect so the positive and negative elements are correct.
  When connecting, **be sure to use crossover wiring, not a branching configuration.**

3 Precautions for the Communication Adaptor control wire

(Some items are duplicated in other sections.)

(1) The overall length should be 1 km or less.

(2) The communication wire has polarity. Connect so the positive and negative elements are correct.

(3) Use only shielded wire. Be sure to ground only one end of the shielding.

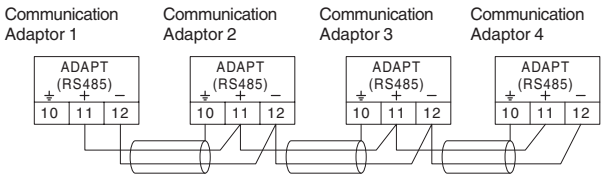

(4) Be sure to use crossover wiring, not a branching configuration.
* Connect the Intelligent Controller to the end of the crossover configuration.

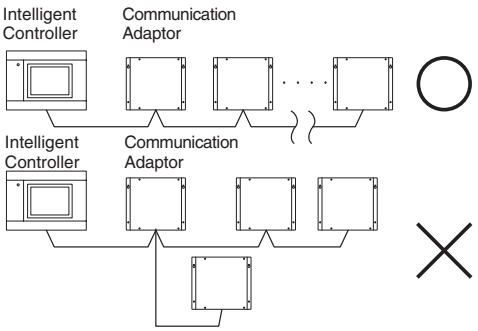

(5) Change the terminating resistance plug CN32 to the "B" side (with terminal resistance) on the board for the Communication Adaptors (**2** of them) at both ends of the configuration.

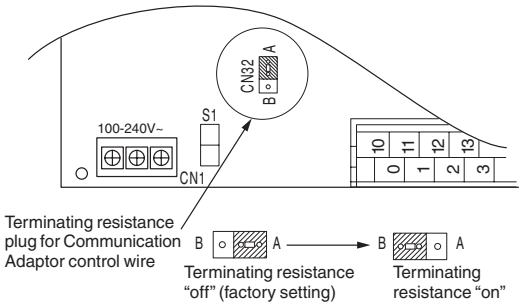

(6) Do not hook more than 16 units up to the Communication Adaptor. The system you are using (such as an Intelligent Controller) may have further restrictions. Consult the installation manual for your system.
* The Intelligent Controller has a maximum restriction of seven units.

(7) Make sure that high voltage (ex. 230 V) AC lines are not connected to the Communication Adaptor control wire or the inter-unit control wiring terminals.

* If high voltage AC is accidentally applied to the inter-unit control wiring terminals, a fuse will blow to protect the controller board.
If this happens, disconnect the AC line, and connect the U2 terminal wire of the inter-unit control wiring to the spare terminal. (Do not change the U1 terminal wire.)
Spare terminals are located right next to U2.

Change terminal number 1 LINK1-U2
→ to terminal number 2 (LINK1-U2)
Change terminal number 4 LINK2-U2
→ to terminal number 5 (LINK2-U2)

9. Communication Adaptor (CZ-CFUNC2)

4 Setting the Communication Adaptor board

The switches on the board control the adaptor numbers, turn the inter-unit control wiring connection on and off, and control other settings.

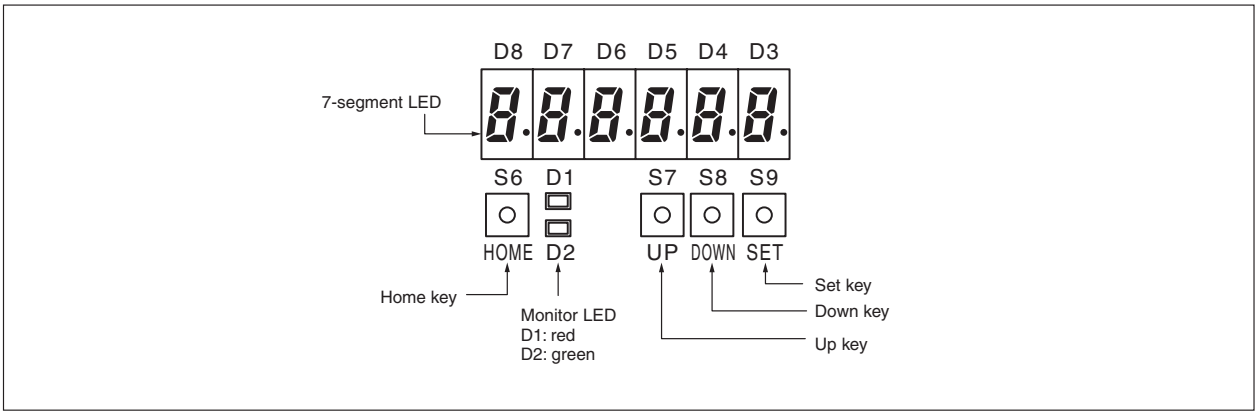

(1) Switch operation overview

Turn on the Power switch(S1) on the board.

① Item selection
Use the UP and DOWN keys to find the desired item, then press the SET key to select.

② Changing the settings
Use the UP and DOWN keys to change the setting, then press the SET key to confirm.

Hold down the HOME key for at least two seconds to reset to the default setting 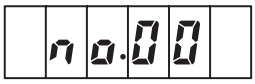

(Any settings in progress will be lost.)

(2) Adaptor number setting procedure

① Hold down the HOME key for at least two seconds so the initial display shows as follows:

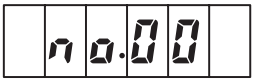

(no.00)

After 2 seconds

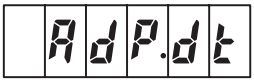

(AdP.dt)

② Press the UP key five times so the following display appears:

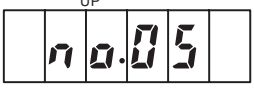

(no.05)

This automatically switches to the below display after 2 more seconds. (Operation is not necessary.)

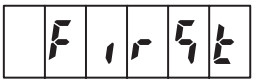

(FirSt)

③ Press the SET key so the below display appears. (Only the green monitor LED is on.)

(1.Ano.00) (Factory setting)

④ Hold down the SET key <u>for at least 1 second</u> so the “00” part blinks, indicating that the setting can be changed. (The green and red monitor LEDs are both on.)
Use the UP and DOWN keys to set the adaptor number.
For example, to set number 3, press the UP key three times. The following will display:

(1.Ano.03)

⑤ Press the SET key for at least 1 second to confirm. (Only the green monitor LED is on.)

9. Communication Adaptor (CZ-CFUNC2)

(3) Setting the inter-unit control wiring connection on/off

① Repeat steps ① to ③ in section (2) "Adaptor number setting procedure" above. The following will display:

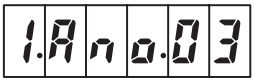

(1.Ano.03) (When the adaptor number is 3)

② Press the UP key once so the following display appears:

(2.Adyu.0) (Factory setting)

③ Hold down the SET key for at least 1 second so the "0" part blinks, indicating that the setting can be changed. (The green and red monitor LEDs are both on.)

Use the UP and DOWN keys to turn the inter-unit control wiring connection on or off as shown in the table below.

Setting value	Inter-unit control wiring connection
0	LINK1: On, LINK2: On (factory setting)
1	LINK1: On, LINK2: Off
2	LINK1: Off, LINK2: On
3	LINK1: Off, LINK2: Off

For example, to connect the inter-unit control wiring only to LINK1, press the UP key once. The following display will result:

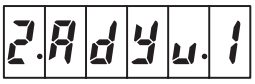

(2.AdYu.1)

④ Press the SET key for at least 1 second to confirm. (Only the green monitor LED is on.)

(4) Other settings

With the display status showing as in number ③ in section (2) "Adaptor number setting procedure", press the UP and DOWN keys to select the setting items shown in the table below. Set as needed.
The setting procedure is the same as above.
(Press the SET key for at least 1 second, press the UP and DOWN keys to change, then press the SET key at least one second to confirm.)

Note

① When configuring, do not set the same adaptor number more than once.
* Use numbers between 1 and 7 for connecting to an Intelligent Controller.
② Turn the inter-unit control wiring connection on/off as appropriate.
(Set to "Off" for LINKs with no connection.)
③ For connecting the inter-unit control wiring to only one link, use the "LINK1" side.

3

9. Communication Adaptor (CZ-CFUNC2)

Table 3-2 Communication Adaptor setting items

	Display	Setting item (grayed in areas indicate factory setting)
DOWN ↑ UP ↓	1.Ano.00 (1.Ano.xx)	**[1] Adaptor number setting** xx = 00 to 15: adaptor number Sets the Communication Adaptor number. Set 1 to 7 for the Intelligent Controller, making sure the same number is not used twice. When actually communicating from a master system, the link system address LINK1 is 2n and LINK2 is 2n + 1, where n is the Communication Adaptor number. Thus, when the adaptor number is 2, the LINK1 address is 4 and the LINK2 address is 5.
	2.AdYu.0 (2.AdYu.x)	**[2] Inter-unit control wiring connection settings** x = 0: LINK1 on, LINK2 on x = 1: LINK1 on, LINK2 off x = 2: LINK1 off, LINK2 on x = 3: LINK1 off, LINK2 off Set so any LINK (inter-unit control wiring) connected to the air conditioner is “on”, and any LINK not connected is “off”. * For solo installation (pulse meter dedicated), use x = 3: LINK1 and 2 both set to off.
	3.Cont.0 (3.Cont.x)	**[3] Base unit settings** Always use 0 (the initial value).
	4.CAn1.0 (4.CAn1.x)	**[4] Settings for the number of Communication Adaptor units in one link, part 1** x = 0 to 7 x = 0: First Communication Adaptor in the LINK1 link x = 1: Second Communication Adaptor in the LINK1 link x = 7: Eighth Communication Adaptor in the LINK1 link
	5.CAn2.0 (5.CAn2.x)	**[5] Settings for the number of Communication Adaptor units in one link, part 2** x = 0 to 7 x = 0: First Communication Adaptor in the LINK2 link x = 1: Second Communication Adaptor in the LINK2 link x = 7: Eighth Communication Adaptor in the LINK2 link Set the Communication Adaptor unit number for each LINK system when connecting multiple Communication Adaptors to one inter-unit control wiring.
	6.PuL.10 (6.PUL.xx)	**[6] Minimum pulse input detection time setting** x = 03: 30 msec x = 10: 100 msec If connecting a pulse meter with a pulse width between 30 and 100 msec, set to 30 msec.
	7.LoCA.0 (7.LoCA.x)	**[7] Interface Adaptor connection settings** x = 0: LINK 1 on, LINK2 on x = 1: LINK 1 off, LINK2 on x = 2: LINK 1 on, LINK2 off x = 3: LINK 1 off, LINK2 off Set whether there is a Interface Adaptor (for turning off and on) for each LINK system. If the setting is “off”, startup will be faster as no Interface Adaptor detection is run.
	8.SCAn.0 (8.SCAn.x)	**[8] Initial communication setting** Always use 0 (the initial value).

9. Communication Adaptor (CZ-CFUNC2)

5 Connecting to external equipment

(1) External all input (No-voltage a-contact static)

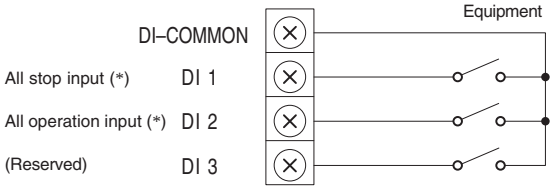

(2) External all output (No-voltage a-contact static)

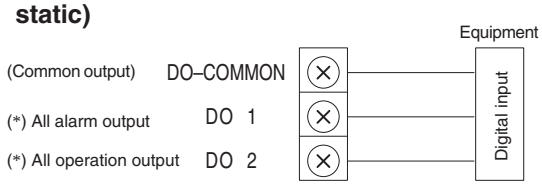

(3) Pulse meter input (No-voltage a-contact pulse)

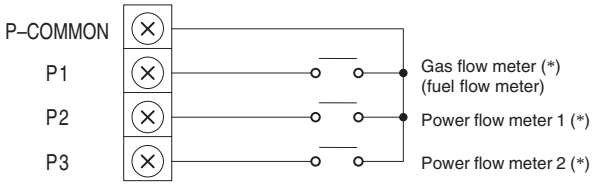

- Minimum pulse width: 100 msec
- Minimum pulse interval: 1 sec

(*) Input/output function when connecting to the Intelligent Controller

- Keep the signal input line lengths to 20 meters or less. For distances greater than this, install a standalone Communication Adaptor or use a relay.
- For use in areas that may be susceptible to electrical noise, use a two-conductor shielded cable (with one line grounded), with a cross-section at least 0.5 mm^2.
- Do not apply external voltages to the input terminals.
- About 10 mA of 5 V DC voltage is applied to the contact point for input terminal detection.
- The output terminal allowable contact voltage and current are 30 V DC and 0.5 A.

6 Outer dimensions

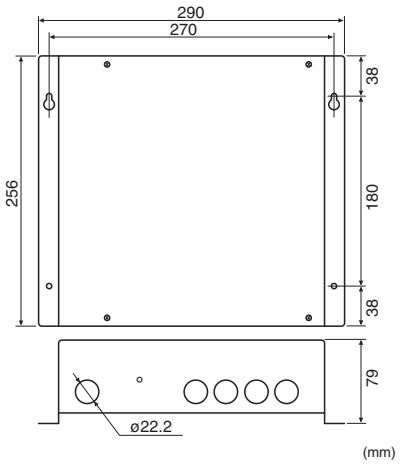

7 Specifications

Rated voltage	Single phase 100-240V~
Rated frequency	50/60 Hz
Power consumption	5.6 W max
Operating temperature	–10 to +50°C
Operating humidity	20 to 80% (no condensation)

3

Appendix A. Connecting to an Intelligent Controller

Before making the initial settings for the Communication Adaptor, check to ensure the below operations are complete.

(1) Is the air conditioner test operation complete?
(2) Is the wiring for the air conditioner and the Communication Adaptor complete?

To set, follow steps 1 to 5 below in sequence.

(1) Adaptor number setting

- **This is a required setting.**
- Set the address for the Communication Adaptor control wire.
  For the Intelligent Controller internal board, the address is 0. Set a value between 1 and 7 for the external adaptor, ensuring no value is used twice.
  Refer to the number (2) "Adaptor number setting procedure" in section 4 "Setting the Communication Adaptor board".
  * Refer to Table 3-2 [1].

(2) Inter-unit control wiring connection setting

- **This setting is required for two or more Communication Adaptors.**
- Two links can be connected to a Communication Adaptor.
  For links without an air conditioner or other such connection, set the LINK to "off".
- The Intelligent Controller can be connected to only four links that are set to be active.
  Refer to the number (3) "Setting the inter-unit control wiring connection on/off" in section 4 "Setting the Communication Adaptor board".
  * Refer to Table 3-2 [2].

(3) Number of Communication Adaptor units in one link setting

- **This setting is required only for using an Intelligent Controller in conjunction with a AMY Software.**
- When adding another Communication Adaptor to the inter-unit control wiring, the adaptor address for the added unit needs to be changed.
  * Refer to Table 3-2 [4] and [5].

(4) Minimum pulse input detection time setting

- **This setting is not required if pulse input (P1, P2, P3) is not used.**
- Use a pulse meter whose minimum pulse width is normally at least 100 msec.
  If and only if a pulse meter 30 msec or higher must be used, use this setting.
  * Refer to Table 3-2 [6].

(5) Interface Adaptor connection setting

- By not using a Interface Adaptor, the configuration confirmation time can be shortened.
- **Not using this setting will not affect operation of the device.**
  * Refer to Table 3-2 [7].

Complete!

10. Remote Sensor

Remote Sensor / CZ-CSRC2

■ Parts Supplied with Remote Sensor

No.	Supplied parts	Qty
1	Remote sensor (comes with 200 mm wire)	1
2	Machine screws M4 × 25	2
3	Wood screws	2
4	Spacers	2

No.	Supplied parts	Qty
5	Wire joints	2
6	Clamp	1
7	Installation manual	1

■ Remote Sensor Installation Guidelines

Place of installation

- Mount the remote sensor at a height of 1 to 1.5 meters above the floor where it can sense the average temperature of the room.
- Do not mount the remote sensor in a place exposed to direct sunlight or a place exposed to outside air such as near a window.
- Do not mount the remote sensor behind an object so that it is separated from the air circulation of the room.
- Mount the remote sensor within the room being air conditioned.
- The remote sensor must be mounted on the wall or other surface vertically.

NOTE

- This device complies with Part 15 of the FCC Rules. Operation is subject to the following two conditions: (1) This device may not cause harmful interference, and (2) this device must accept any interference received, including interference that may cause undesired operation.
- This equipment has been tested and found to comply with the limits for a Class B digital device, pursuant to part 15 of the FCC Rules. These limits are designed to provide reasonable protection against harmful interference in a residential installation.
  This equipment generates, uses and can radiate radio frequency energy and, if not installed and used in accordance with the instructions, may cause harmful interference to radio communications. However, there is no guarantee that interference will not occur in a particular installation. If this equipment does cause harmful interference to radio or television reception, which can be determined by turning the equipment off and on, the user is encouraged to try to correct the interference by one or more of the following measures:
  - Reorient or relocate the receiving antenna.
  - Increase the separation between the equipment and receiver.
  - Connect the equipment into an outlet on a circuit different from that to which the receiver is connected.
  - Consult the dealer or an experienced radio/TV technician for help.
- FCC Caution: To assure continued compliance, follow the attached installation instructions.
  Any changes or modifications not expressly approved by the party responsible for compliance could void the user's authority to operate this equipment.

10. Remote Sensor

■ How to Install the Remote Sensor

NOTE
- Do not twist the remote sensor wiring with the power wiring or run it in the same metal conduit, because this may cause malfunction.
- Install the remote sensor away from sources of electrical noise.
- Install a noise filter or take other appropriate action if electrical noise affects the power supply circuit of the unit.

● Use an electric junction box (field supply) (See Fig. 3-85) for flush mounting of the remote sensor.

When mounting the back case to the electric junction box, tighten the screws securely until the screw heads touch the back case. Otherwise, a loose screw head may damage the PCB on the back of the top cover when mounting the top cover. But do not over-tighten the screws. Overtightening may deform the back case and cause the unit to fall.

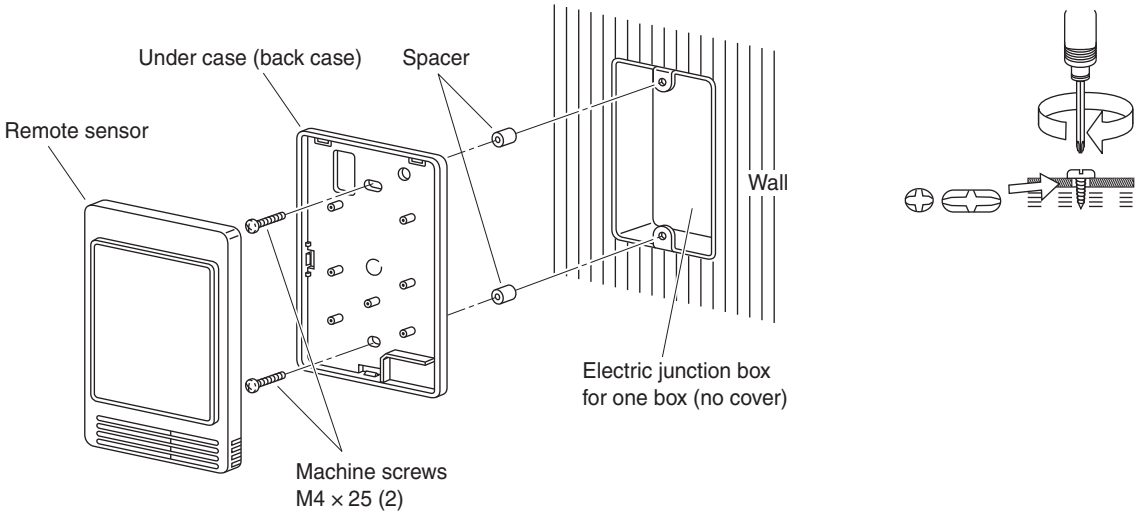

Fig. 3-85

1. Insert a screwdriver or the like in the groove on the lower side of the remote sensor body to pry off the back case. (See Fig. 3-86)

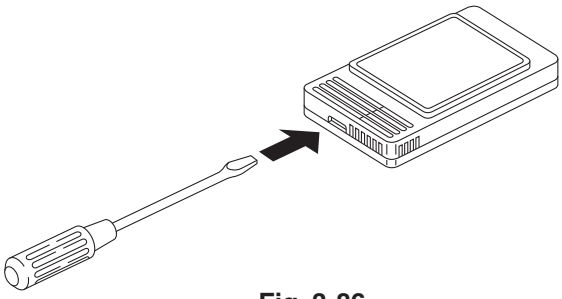

Fig. 3-86

2. Use the 2 supplied M4 machine screws to secure the remote sensor back case. Prior to mounting, clear the cutouts in the back case corresponding to the holes in the electric junction box using a screwdriver or the like. Use the spacers and take care not to tighten the screws excessively. If the back case will not seat well, cut the spacers to a suitable thickness.
3. Connect field supplied 2 core lead wires to the lead wires from the remote sensor. (See “How to wire the remote sensor.”)
   When connecting the field supplied 2 core lead wires to the terminal block, check the terminal numbers in the indoor unit to make sure that the wires are correctly connected. (See Fig. 3-87) (The remote sensor is damaged if 220 / 240V AC is applied.)
4. Fit the remote sensor to the tabs of the back case and mount it.

10. Remote Sensor

■ How to Wire the Remote Sensor

● **Connection diagram**

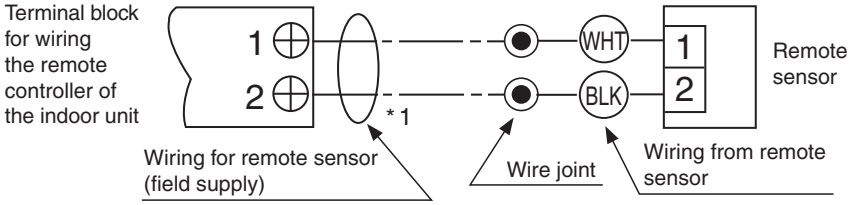

* 1: 0.5 mm² to 1.25 mm² wires are used for lead wires.
Remote controller wiring can be extended to a maximum of 500 m.

Fig. 3-87

● **How to connect lead wires**

2 supplied white wire joints	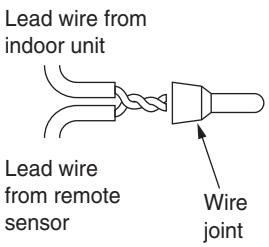	1. Peel off 14 mm of the cable sheathing. 2. Twist the 2 wires together and crimp them together with the wire joint. 3. When a crimping tool is not used, solder the wires together and cover the joint with insulating tape.

Fig. 3-88

3

■ Important Information When Using Together with Remote Controller Switch

● **Installation method**

1. Set the remote controller switch as the main remote controller.

NOTE Do not set the room temperature sensor on the remote controller switch as the remote controller sensor.

● **Basic wiring diagram**

NOTE When connecting the wires, be careful not to wire incorrectly.
(Incorrect wiring will damage the unit.)

* Wiring when controlling a single indoor unit with the remote sensor and remote controller switch:

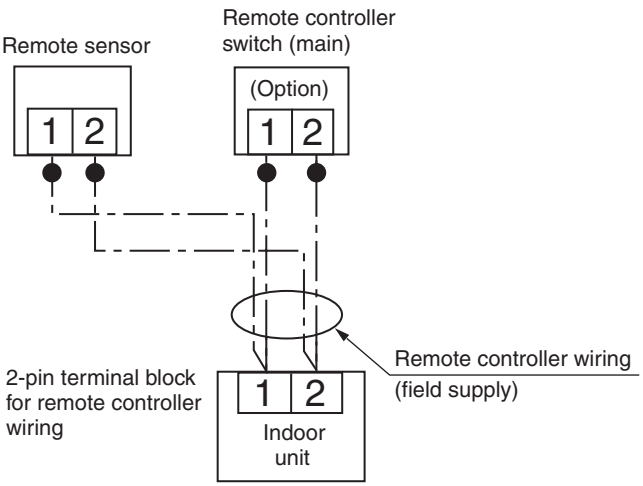

Fig. 3-89

LonWorks Interface (CZ-CLNC2) INSTALLATION INSTRUCTIONS

--- Contents ---

1.	LonWorks Interface Overview	3-204
	Product Overview	
	System Diagram	
	Functions	
2.	Procedures for Installation (Electrical Work) of LonWorks Interface	3-207
	Safety Precautions	
	Included Parts	
	Installation Method	
	Wiring Specifications	
	LonWorks Interface Structure	
	Power Board Initial Settings	3-208
	Power Board Wiring	
	Wiring Procedure	
	Main Circuit Board	
	Indoor Unit Enabling Switches	3-209
	Setting Switches	
	Address Switches	
	Communication LED (Green)	3-210
	Data LED (Red)	
	Diagram of External Dimensions	
	Product Specifications	
3.	Assigning Central Control Addresses	3-211
4.	LonWorks Interface Test Run	3-212
5.	Checking the LonWorks Interface Version	3-213
6.	List of LonWorks Network Variables	3-214
7.	Details of LonWorks Network Variables	3-215
8.	Locations Where Neuron ID is Applied	3-218

LonWorks is a registered trademark of the Echelon Corporation.

11. LonWorks Interface (CZ-CLNC2)

1. LonWorks Interface Overview

Product Overview

This interface is a communications interface for connecting LonWorks to an air conditioner unit control network.

From the host connected to LonWorks, basic settings and status monitoring is possible for up to 16 groups of A/C units.

System Diagram

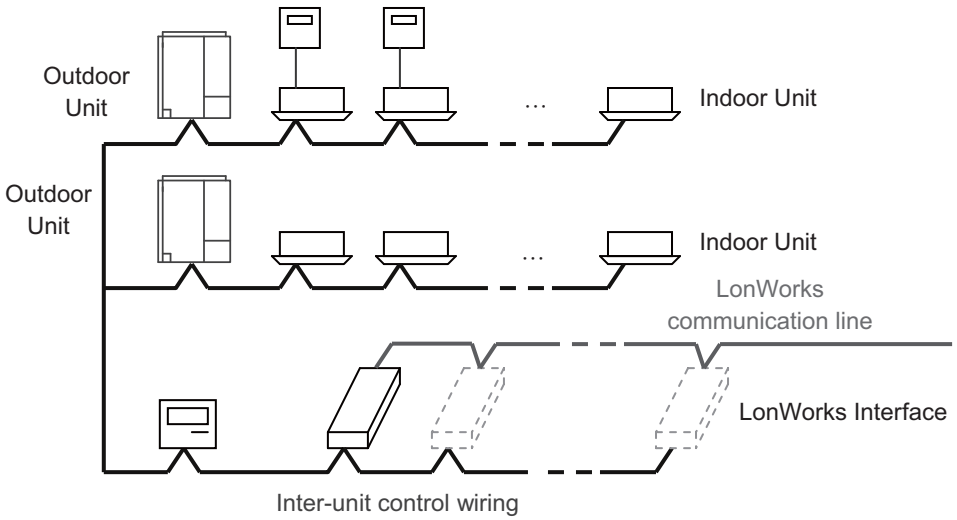

- Up to 16 groups of indoor units (maximum 64 units) can be controlled with 1 LonWorks Interface unit. For 17 or more groups of indoor units, connect additional interface units.
- Install a remote controller (or system controller, etc.), which can control the A/C units, to an inter-unit control wiring other than the LonWorks Interface unit.
- Before making the connection to the LonWorks Interface unit, set the central control addresses in the indoor units.

11. LonWorks Interface (CZ-CLNC2)

Functions

A/C unit settings from the LonWorks	Settings for each group of indoor units	Start/stop
		Temp. setting(*1)
		Operation mode
		Option 1 settings(*2)
		Option 2 settings(*2)
	Settings for all units	Emergency stop
A/C unit status notifications made to the LonWorks		Start/stop
		Temp. setting
		Operation mode
		Option 1 settings(*2)
		Option 2 settings(*2)
		Alarm status(*3)
		Indoor units with active alarms(*4)
		Room temp(*5)
		A/C unit status(*6)
Configuration properties		Transmission interval settings(*7)
		Minimum time secured for transmission(*8)

3

(*1) When a temperature above the upper limit of the temperature which can be set by the indoor units has been specified, it will be set to the upper limit; conversely, when a temperature below the lower limit has been specified, it will be set to the lower limit.
(*2) Two options can be selected using the setting switch from among remote-controller prohibit, fan speed setting, air direction setting and filter sign.
(*3) When indoor units are under group control, an alarm is determined to have occurred when the alarm occurs at one or more of the units.
(*4) The number of the indoor unit at which the alarm has occurred is notified. This makes it possible to identify at which indoor unit of the indoor unit group the alarm has occurred.
(*5) When indoor units are under group control, the room temperature of the main unit in the group is notified.
(*6) When an alarm occurs at one or more indoor units, the alarm code is notified as the indoor unit status.
(*7) All the data which can be output is output at the set interval.
(*8) The same data is not output continuously at the set interval.

11. LonWorks Interface (CZ-CLNC2)

2. Procedures for Installation (Electrical Work) of LonWorks Interface

Safety Precautions

∗ The following is intended for the installer responsible for installation and test operations of the LonWorks Interface, and should be carefully read before beginning.

∗ The precautions given in this manual consist of specific "Warnings" and "Cautions." They provide important safety-related information and are important for your safety, the safety of others, and trouble-free operation of the system. Be sure to strictly observe all safety procedures. The labels and their meanings are as described below.

⚠Warning	This symbol refers to a hazard or unsafe procedure or practice which can result in severe personal injury or death.
⚠Caution	This symbol refers to a hazard or unsafe procedure or practice which can result in personal injury or product or property damage.

※After installation is completed, perform a test run to check for operating trouble. As you do, use the central control device *Operation Manual* and explain operating procedures to the customer. Then request that the customer store this manual together with the central control device *Operation Manual.*

⚠Warning

- Be sure to arrange installation from the dealer where the system was purchased or using a professional installer.
  Electric shock or fire may result if an inexperienced person performs any installation or wiring procedures incorrectly.
- Please install and ensure construction according to *Procedures for Installation (Electrical Work) of LonWorks Interface.*
- Only a qualified electrician should attempt to connect this system, in accordance with the instructions in this manual.
  If the electrical circuit capacity is insufficient a danger of electric shock and fire may be present.
- Use the specified cables (type and wiring diameter) for the electrical connections, and connect the cables securely. Run and fasten the cables securely so that external forces or pressure placed on the cables will not be transmitted to the connection terminals. Overheating or fire may result if connections or attachments are not secure.
- Do the ground connection.
- The installation location requires the use of a circuit breaker. Failure to use a circuit breaker may result in electric shock or fire.
- Circuit breaker must be incorporated in the fixed wiring in accordance with the wiring regulations. The circuit breaker must be an approved 10-16 A, having a contact separation in all poles.

Included Parts

No.	Part	Qty
(1)	Product manual	1

Installation Method

- The screws used to install the main unit must be provided by the installer.

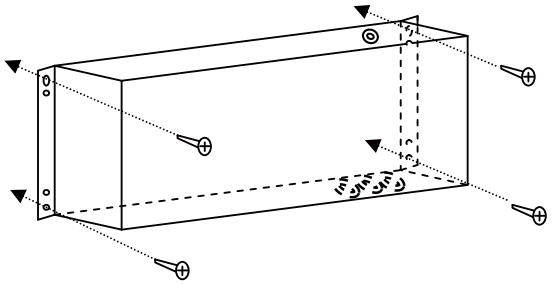

- Install the LonWorks Interface away from any sources of electrical noise.

Wiring Specifications

- For the inter-unit control wiring use twin-core 0.5 – 2 mm^2 shielded cables and ground the shield on both side.
- For the LonWorks communication line cables, use twisted-pair cables with a wire diameter of 0.51 mm or larger as recommended by Echelon Corp.

Examples of cables recommended by Echelon Corp			
Cable type	Wire diameter /AWG	Total cable length	
		Bus type	Free
24 AMG twisted-pair (TIA568A category 5)	0.51mm /24	900m	450m

- Do not use the same cable for the inter-unit control wiring, the LonWorks communication lines, and the power cable. Do not run them through the same conduit or place the cables near one another.
- Connect the cables so that there is no miswiring.
  (Miswiring can cause malfunction.)

LonWorks Interface Structure

- This interface contains 4 LonWorks communication boards (nodes).
- Up to 4 indoor unit groups (maximum 32 units) can be assigned to 1 node.

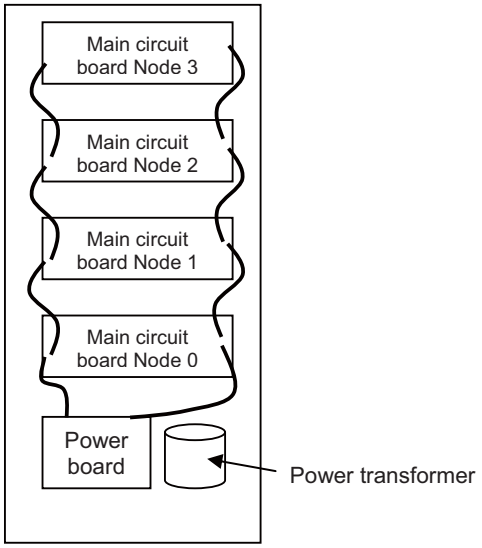

3

11. LonWorks Interface (CZ-CLNC2)

Power Board Initial Settings

Not Install: Ordinarily, keep this set to "Not Install" (initial setting).
Install: Free topology terminal resistor (51Ω) for the LonWorks communication lines.

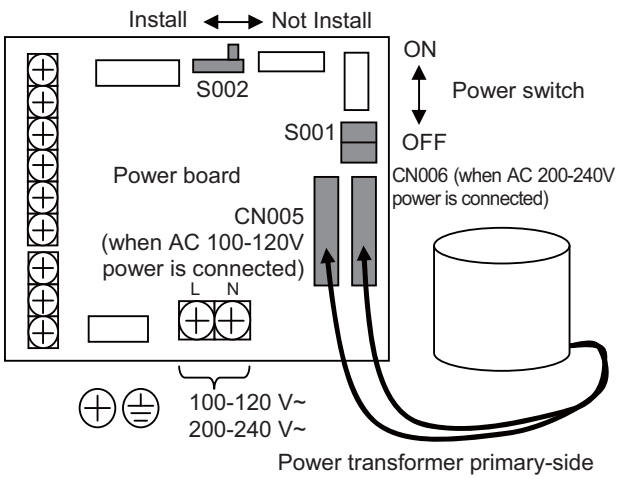

When AC 200-240V power is connected, connect the power transformer primary-side to CN006. When AC 100-120V power is connected, connect the power transformer primary-side to CN005. (It is connected to CN006 when the unit is shipped from the plant.)

Wiring Procedure

- Connect the power supply lines to the L and N power supply terminals.
  (the power suplly neutral to the N terminal.)
- Connect an earth ground line to the screw.

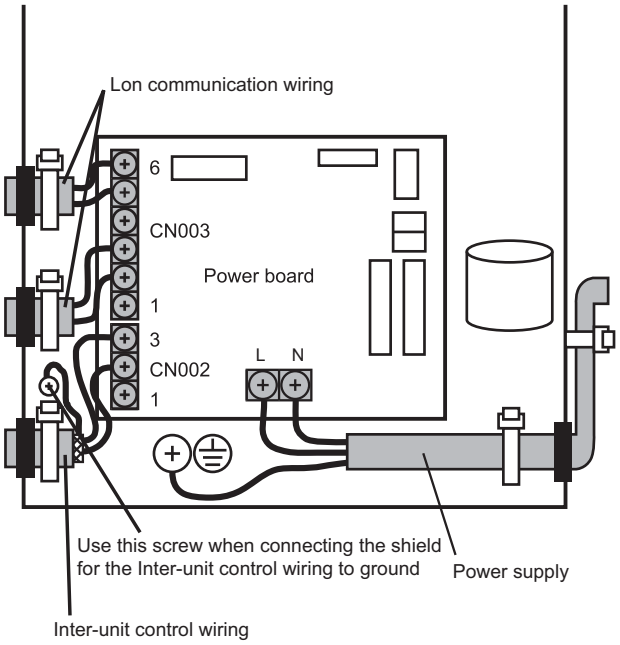

Power Board Wiring

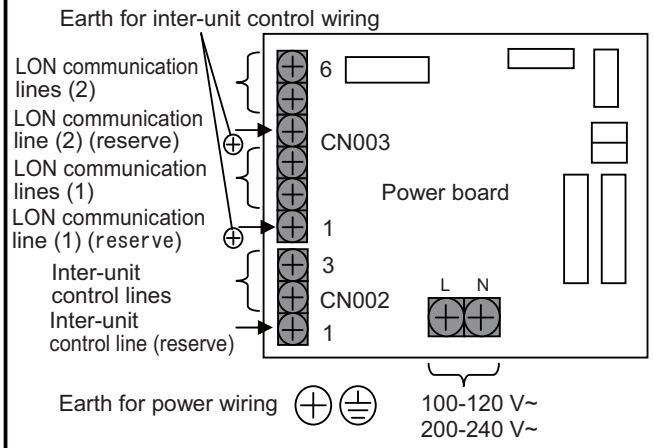

- The LonWorks communication lines can be connected to either (1) or (2) in the above figure. The results are the same.
- Do not run the inter-unit control lines, the LonWorks communication lines, and the power cables through the same conduit, or place the cables near one another. Doing so can cause the system to malfunction.
- Before turning the power on, follow the instruction in *Power Board Initial Settings.*
- When using the spare inter-unit cotrol line, connect [1] and [3] at CN002.
- When using the spare LON communication line, connect [1] and [3] or [4] and [6] at CN003.

Main Circuit Board

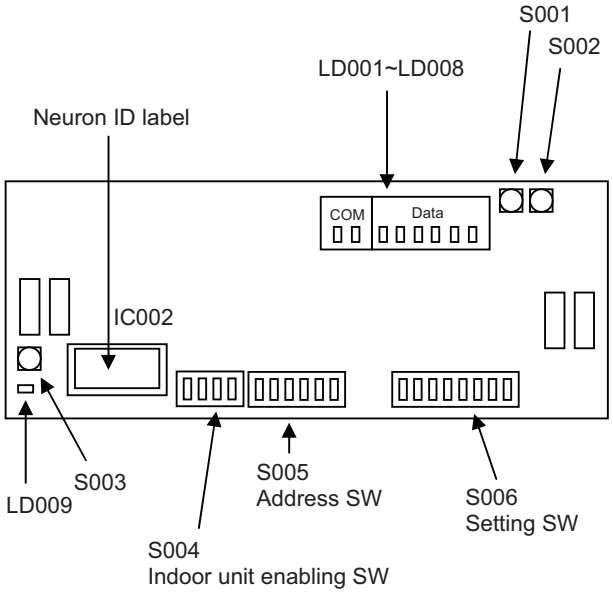

11. LonWorks Interface (CZ-CLNC2)

Indoor Unit Enabling Switches

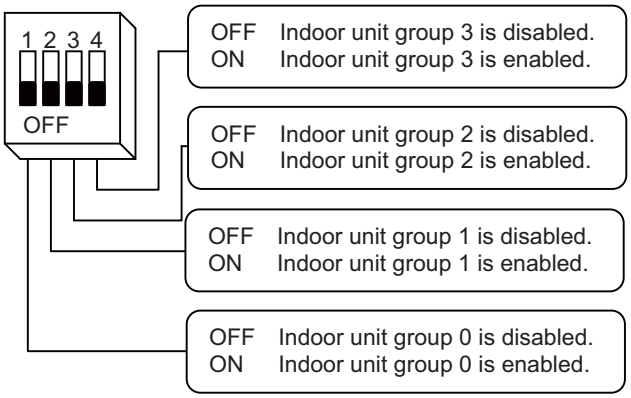

- One main circuit board can control 4 groups (indoor unit groups 0 – 3).
- Set to "disable" if the indoor unit group does not exist. Set to "enable" if the indoor unit group exists.

Setting Switches

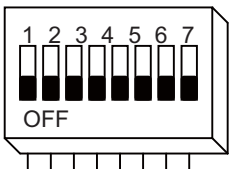

O: ON –: OFF R/C: Remote Controller

6	7	8	Option 1	Option 2
-	-	-	R/C prohibit	Fan speed
-	-	O	R/C prohibit	Air direction
-	O	-	R/C prohibit	Filter sign
-	O		Fan speed	Air direction
O	-	-	Fan speed	Filter sign
O	-	O	Air direction	Filter sign
O	O	-	–––	–––
O	O	O	–––	–––

Not used (Be sure to set to OFF.)

OFF Central/individual setting is according to the central control device (normal setting).
ON Central/individual setting is always set to "individual."

OFF Control temperature is used for the room temperature (normal setting).
ON Inlet temperature is used for the room temperature.

Not used (Be sure to set to OFF.)

OFF Communicate as a "sub" central control device.
ON Communicate as a "main" central control device.

- If there are no central control devices other than this interface, set to "main" (ON).
- To set this interface as the main, set only node 0 to "main" (ON).
- If using in combination with an communication adapter, AMY adapter, intelligent controller, or system controller, set to "sub" (OFF).
- If using in combination with an ON/OFF central controller, set the ON/OFF central controller as the main if the ON/OFF central controller's remote-controller prohibit function is to be used. If this interface's remote-controller prohibit function is to be used, set this interface as the main.

Address Switches

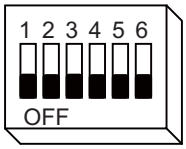

O : ON - : OFF

Address switch 1	2	3	4	5	6	Central control address
-	-	-	-	-	-	1
O	-	-	-	-	-	2
-	O	-	-	-	-	3
O	O	-	-	-	-	4
-	-	O	-	-	-	5
O	-	O	-	-	-	6
-	O	O	-	-	-	7
O	O	O	-	-	-	8
-	-	-	O	-	-	9
O	-	-	O	-	-	10
-	O	-	O	-	-	11
O	O	-	O	-	-	12
-	-	O	O	-	-	13
O	-	O	O	-	-	14
-	O	O	O	-	-	15
O	O	O	O	-	-	16
-	-	-	-	O	-	17
O	-	-	-	O	-	18
-	O	-	-	O	-	19
O	O	-	-	O	-	20
-	-	O	-	O	-	21
O	-	O	-	O	-	22
-	O	O	-	O	-	23
O	O	O	-	O	-	24
-	-	-	O	O	-	25
O	-	-	O	O	-	26
-	O	-	O	O	-	27
O	O	-	O	O	-	28
-	-	O	O	O	-	29
O	-	O	O	O	-	30
-	O	O	O	O	-	31
O	O	O	O	O	-	32
-	-	-	-	-	O	33
O	-	-	-	-	O	34
-	O	-	-	-	O	35
O	O	-	-	-	O	36
-	-	O	-	-	O	37
O	-	O	-	-	O	38
-	O	O	-	-	O	39
O	O	O	-	-	O	40
-	-	-	O	-	O	41
O	-	-	O	-	O	42
-	O	-	O	-	O	43
O	O	-	O	-	O	44
-	-	O	O	-	O	45
O	-	O	O	-	O	46
-	O	O	O	-	O	47
O	O	O	O	-	O	48
-	-	-	-	O	O	49
O	-	-	-	O	O	50
-	O	-	-	O	O	51
O	O	-	-	O	O	52
-	-	O	-	O	O	53
O	-	O	-	O	O	54
-	O	O	-	O	O	55
O	O	O	-	O	O	56
-	-	-	O	O	O	57
O	-	-	O	O	O	58
-	O	-	O	O	O	59
O	O	-	O	O	O	60
-	-	O	O	O	O	61
O	-	O	O	O	O	62
-	O	O	O	O	O	63
O	O	O	O	O	O	64

3

11. LonWorks Interface (CZ-CLNC2)

Communications LED (Green)

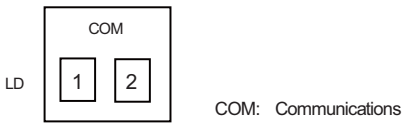

LD001	LD002	Display meaning
X	X	①Power OFF
X	Low	② –––––
X	High	③Flash writer writing in progress
X	O	④Waiting for A/C unit initial communication
Low	X	⑤A/C unit initial communication in progress
Low	Low	⑥ –––––
Low	High	⑦LonWorks communication microcomputer error
Low	O	⑧EEPROM error
High	X	⑨ –––––
High	Low	⑩ –––––
High	High	⑪ –––––
High	O	⑫ –––––
O	X	⑬Test run mode
O	Low	⑭ –––––
O	High	⑮Version display in progress
O	O	⑯Normal communications in progress

X: Not lit、Low: Low-speed flashing (once/second)
High: High-speed flashing, O: Constantly lit

Data LED (Red)

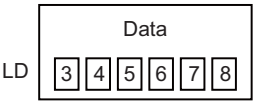

Communications LED	Data LED display meaning
①	No LED lit
②	All LEDs lit
③	–––––
④	Displays the wait time (seconds) for A/C unit initial communication.
⑤	Displays the A/C unit communications status
⑥	–––––
⑦	No LED lit
⑧	No LED lit
⑨	–––––
⑩	–––––
⑪	–––––
⑫	–––––
⑬	According to the test run mode specifications
⑭	–––––
⑮	According to the version display specifications
⑯	Displays the A/C unit communications status

• Display of A/C unit communications status

LD	Display meaning	
	Indoor unit group	**OFF:** Waiting for initial communication **Low-speed flashing:** Waiting for minimum transmission interval **High-speed flashing:** Initial communication in progress **ON:** Normal communications in progress
003	0	
004	1	
005	2	
006	3	
007	Illuminates for 200 ms when data is output to the LonWorks communicator.	
008	Illuminates for 200 ms when data is output to the indoor/outdoor communicator.	

Diagram of External Dimensions

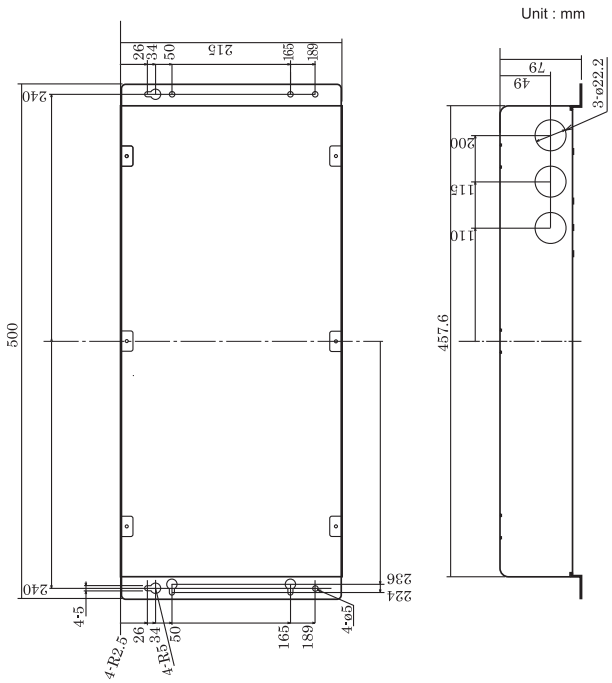

Product Specifications

Connects to	LonWorks network FTT-10 A transceiver device
Power	Single-phase, 100-120/ 200-240V~
Power consumption	11 W max.
Service environment conditions	Temp. 0 to 40°C, humidity 20 to 80% Indoor use only
External dimensions	Height 79 mm × Width 500 mm × Depth 215 mm
Weight	Approx. 3.3 kg

11. LonWorks Interface (CZ-CLNC2)

3. Assigning Central Control Addresses

- Before assigning central control addresses for the LonWorks Interface, use the remote controller to make central control address settings for A/C units.
- Follow only the steps for "Assigning Central Control Addresses" when a system controller or other central controller is already provided.

[Setting Central Control Addresses]

(1) Press and hold both the and buttons for 4 seconds or longer.
Check that the "SETTING" display on the remote controller is flashing.

(2) Set the "03" item code by pressing the and temperature setting buttons.

(3) Set the desired central control address by pressing the and timer buttons.

(4) Press the SET button, and check that the "SETTING" display stops flashing and illuminates instead.
(The setting data cannot be changed unless the SET button is pressed.)

(5) Press the button, and check that the display on the remote controller has been cleared.

remote controller

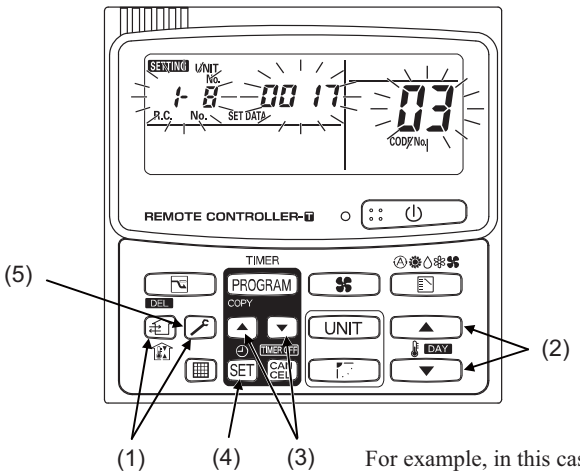

For example, in this case
Indoor unit address: 1-8
Central address: 17

[Assigning Central Control Addresses]

(1) Turn the power switch (S001) on the LonWorks Interface power board to OFF.

(2) Turn the setting switch (S006-2) to OFF (so that central control addresses are set with the DIP switches).

S006

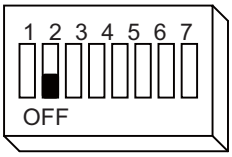

(3) Set the first central control address with the address switch (S005). When assigning serial numbers, a consecutive series of numbers is assigned for the central control addresses.

<Example> If the first central control address is “5,” then this circuit board assigns central control addresses “5,” “6,” “7,” and “8.”

S005

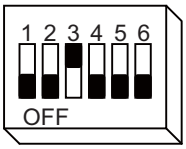

(4) Make the enable/disable settings with the indoor unit enabling switches (S004).

<Example> If central control addresses “6” and “8” do not exist, enable only “5” and “7.”

S004

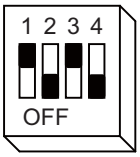

“5” is set as the central control address for indoor unit group 0, and “7” is set as the central control address for indoor unit group 2.

(5) Turn the power switch (S001) on the LonWorks Interface power board to ON.

3

4. LonWorks Interface Test Run

Before performing a test run of the LonWorks Interface, perform test runs of the A/C units and assign central control addresses for A/C units.

[LonWorks Interface Test Run Procedure]

(1) Press and hold touch-switch S001 on the main circuit board for 5 seconds or longer.
Test run mode is enabled for the main circuit board that is currently being controlled. LD001 illuminates, and LD002 – LD008 turn off.

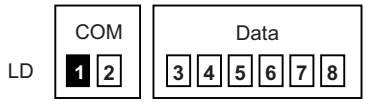

(2) Press touch-switch S002. The data LEDs appear as shown in the tables below.
In addition, the assigned indoor unit groups start and stop as shown in the tables below.

STEP 1

COM: 1 2 — Data: 3 4 5 6 7 8

Indoor unit Gr	Start/stop
0	Stop
1	Stop
2	Stop
3	Stop

S002 PUSH

STEP 2

COM: 1 2 — Data: 3 4 5 6 7 8

Indoor unit Gr	Start/stop
0	Start
1	Stop
2	Stop
3	Stop

S002 PUSH

STEP 3

COM: 1 2 — Data: 3 4 5 6 7 8

Indoor unit Gr	Start/stop
0	Start
1	Start
2	Stop
3	Stop

S002 PUSH

STEP 4

COM: 1 2 — Data: 3 4 5 6 7 8

Indoor unit Gr	Start/stop
0	Start
1	Start
2	Start
3	Stop

S002 PUSH

STEP 5

COM: 1 2 — Data: 3 4 5 6 7 8

Indoor unit Gr	Start/stop
0	Start
1	Start
2	Start
3	Start

S002 PUSH

STEP 1

COM: 1 2 — Data: 3 4 5 6 7 8

Indoor unit Gr	Start/stop
0	Stop
1	Stop
2	Stop
3	Stop

S002 PUSH

(3) Be sure to reset the power after the LonWorks Interface test run is completed.

11. LonWorks Interface (CZ-CLNC2)

5. Checking the LonWorks Interface Version

(1) Press touch-switch S002.
Version display mode is enabled on that circuit board for a period of 18 seconds. LD001 illuminates, and LD002 flashes at high speed.

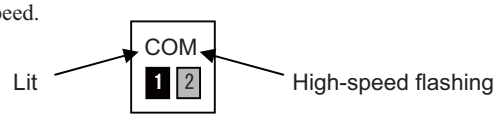

(2) While the version is displayed (18 seconds), the display contents are the following.

First 3 seconds	Displays the first digit of the main microcomputer version (Off, Lit)
Next 3 seconds	Displays the second digit of the main microcomputer version (Lit, Off)
Next 3 seconds	Displays the third digit of the main microcomputer version (Lit, Lit)
Next 3 seconds	Displays the first digit of the LonWorks I/F microcomputer version (Off, Lit)
Next 3 seconds	Displays the second digit of the LonWorks I/F microcomputer version (Lit, Off)
Last 3 seconds	Displays the third digit of the LonWorks I/F microcomputer version (Lit, Lit)

• Version display

0	3 4 5 6	5	**3** 4 **5** 6
1	**3** 4 5 6	6	3 **4** **5** 6
2	3 **4** 5 6	7	**3** **4** **5** 6
3	**3** **4** 5 6	8	3 4 5 **6**
4	3 4 **5** 6	9	**3** 4 5 **6**

<Example> Main microcomputer Version 3.56
LonWorks I/F microcomputer Version 2.00

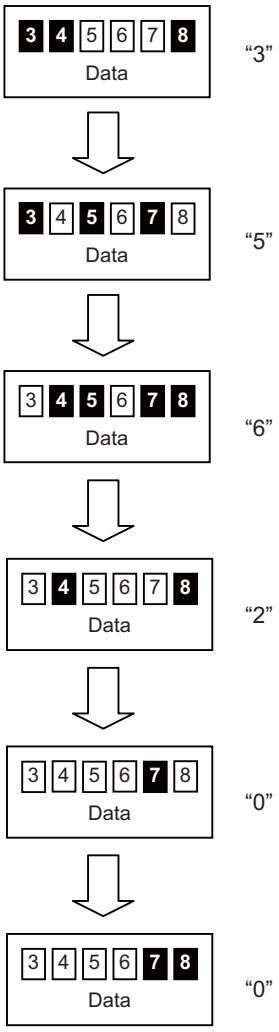

3

6. List of LonWorks Network Variables

A/C unit	Input/output	Item	Variable name	Variable type
Indoor group 0	Input	Start/stop	nviOnOff_00	SNVT_switch
		Temp. setting	nviSetPoint_00	SNVT_temp_p
		Operating mode	nviHeatCool_00	SNVT_hvac_mode
		Option 1 setting	nviOption1_00	SNVT_switch
		Option 2 setting	nviOption2_00	SNVT_switch
	Output	Start/stop status	nvoOnOff_00	SNVT_switch
		Temp. setting	nvoSetPoint_00	SNVT_temp_p
		Operating mode	nvoHeatCool_00	SNVT_hvac_mode
		Option 1 status	nvoOption1_00	SNVT_switch
		Option 2 status	nvoOption2_00	SNVT_switch
		Alarm status	nvoAlarm_00	SNVT_switch
		Indoor units with active alarms	nvoAlarmIn_00	SNVT_switch
		Room temp.	nvoSpaceTemp_00	SNVT_temp_p
		Indoor unit status	nvoInState_00	SNVT_count
Indoor group 1	Input	Start/stop	nviOnOff_01	SNVT_switch
		Temp. setting	nviHeatCool_01	SNVT_temp_p
		Operating mode	nviSetPoint_01	SNVT_hvac_mode
		Option 1 setting	nviOption1_01	SNVT_switch
		Option 2 setting	nviOption2_01	SNVT_switch
	Output	Start/stop status	nvoOnOff_01	SNVT_switch
		Temp. setting	nvoSetPoint_01	SNVT_temp_p
		Operating mode	nvoHeatCool_01	SNVT_hvac_mode
		Option 1 status	nvoOption1_01	SNVT_switch
		Option 2 status	nvoOption2_01	SNVT_switch
		Alarm status	nvoAlarm_01	SNVT_switch
		Indoor units with active alarms	nvoAlarmIn_01	SNVT_switch
		Room temp.	nvoSpaceTemp_01	SNVT_temp_p
		Indoor unit status	nvoInState_01	SNVT_count
Indoor group 2	Input	Start/stop	nviOnOff_02	SNVT_switch
		Temp. setting	nviHeatCool_02	SNVT_temp_p
		Operating mode	nviSetPoint_02	SNVT_hvac_mode
		Option 1 setting	nviOption1_02	SNVT_switch
		Option 2 setting	nviOption2_02	SNVT_switch
	Output	Start/stop status	nvoOnOff_02	SNVT_switch
		Temp. setting	nvoSetPoint_02	SNVT_temp_p
		Operating mode	nvoHeatCool_02	SNVT_hvac_mode
		Option 1 status	nvoOption1_02	SNVT_switch
		Option 2 status	nvoOption2_02	SNVT_switch
		Alarm status	nvoAlarm_02	SNVT_switch
		Indoor units with active alarms	nvoAlarmIn_02	SNVT_switch
		Room temp.	nvoSpaceTemp_02	SNVT_temp_p
		Indoor unit status	nvoInState_02	SNVT_count
Indoor group 3	Input	Start/stop	nviOnOff_03	SNVT_switch
		Temp. setting	nviHeatCool_03	SNVT_temp_p
		Operating mode	nviSetPoint_03	SNVT_hvac_mode
		Option 1 setting	nviOption1_03	SNVT_switch
		Option 2 setting	nviOption2_03	SNVT_switch
	Output	Start/stop status	nvoOnOff_03	SNVT_switch
		Temp. setting	nvoSetPoint_03	SNVT_temp_p
		Operating mode	nvoHeatCool_03	SNVT_hvac_mode
		Option 1 status	nvoOption1_03	SNVT_switch
		Option 2 status	nvoOption2_03	SNVT_switch
		Alarm status	nvoAlarm_03	SNVT_switch
		Indoor units with active alarms	nvoAlarmIn_03	SNVT_switch
		Room temp.	nvoSpaceTemp_03	SNVT_temp_p
		Indoor unit status	nvoInState_03	SNVT_count
Indoor groups 0 – 3	Input	Emergency stop	nviAllInOff	SNVT_switch

Transmission intervals settings	nciSndHrtBt	SNVT_time_sec
Minimum time secured for transmission	nciMinOutTm	SNVT_time_sec

7. Details of LonWorks Network Variables

[nv1] Unit start/stop command

network input SNVT_switch nviOnOff_00;
network input SNVT_switch nviOnOff_01;
network input SNVT_switch nviOnOff_02;
network input SNVT_switch nviOnOff_03;

These input network variables are used to change the start/stop status of the indoor unit.
If start/stop is only done from an A/C unit side (as with the remote controller), then it is not necessary to use these network variables.

Contents state 0: Stop 1: start value (Not used)

[nv2] Unit start/stop status notification

network output SNVT_switch nvoOnOff_00;
network output SNVT_switch nvoOnOff_01;
network output SNVT_switch nvoOnOff_02;
network output SNVT_switch nvoOnOff_03;

These output network variables are used to provide notification of the unit's current start/stop status and the thermostat ON/OFF status.
They are also output when the status has been changed from an A/C unit side (as with the remote controller).
They are output when the LonWorks Interface or the A/C unit power is reset.
When the indoor units are subject to group control, "thermostat ON" is output when 1 or more indoor unit is thermostats ON, and "thermostat OFF" is output when all indoor unit are thermostats OFF.

Contents state 0: Stop 1: Start value 0: Thermostat OFF 200: Thermostat ON

[nv3] Temperature setting command

network input SNVT_temp_p nviSetpoint_00;
network input SNVT_temp_p nviSetpoint_01;
network input SNVT_temp_p nviSetpoint_02;
network input SNVT_temp_p nviSetpoint_03;

These input network variables are used to change the indoor unit temperature setting.
If the temperature setting is only changed from an A/C unit side (as with the remote controller), then it is not necessary to use these network variables.
When a temperature above the upper limit of the temperature which can be set by the indoor units has been specified, it will be set to the upper limit; conversely, when a temperature below the lower limit has been specified, it will be set to the lower limit.

Contents
Valid range

Auto heat/cool mode:	17 - 27°C
Heat mode:	16 - 26°C
Cool mode:	18 - 30°C
Dry mode:	18 - 30°C
Fan mode:	Temp. setting not used.

Temperature settings are made in units of 1.0°C. (Values after the decimal point are discarded.)

* Be aware that the temperature setting ranges may vary according to the models of the outdoor and indoor units.

[nv4] Temperature setting status notification

network output SNVT_temp_p nvoSetpoint_01;
network output SNVT_temp_p nvoSetpoint_01;
network output SNVT_temp_p nvoSetpoint_02;
network output SNVT_temp_p nvoSetpoint_03;

These output network variables are output when the temperature setting status is changed.
They are also output when the status has been changed from an A/C unit side (with the remote controller).
They are output when the LonWorks Interface or the A/C unit power is reset.

Contents

Valid range	Output range:	16 - 30°C
	Temp. unit:	1.0 °C

* Be aware that the temperature setting ranges may vary according to the models of the outdoor and indoor units.

[nv5] Operating mode setting command

network input SNVT_hvac_mode nviHeatCool_00;
network input SNVT_hvac_mode nviHeatCool_01;
network input SNVT_hvac_mode nviHeatCool_02;
network input SNVT_hvac_mode nviHeatCool_03;

These input network variables are used to change the indoor unit operating mode.
If the operating mode setting is only changed from an A/C unit side (as with the remote controller), then it is not necessary to use these network variables.

Contents 0: Auto heat/cool 1: Heat 3: Cool 5: Dry 9: Fan

* The operating modes that can be set may vary according to the models of the outdoor and indoor units.
* Settings other than the above are ignored.

[nv6] Operating mode status notification

network output SNVT_hvac_mode nvoHeatCool_00;
network output SNVT_hvac_mode nvoHeatCool_01;
network output SNVT_hvac_mode nvoHeatCool_02;
network output SNVT_hvac_mode nvoHeatCool_03;

These output network variables are output when the operating mode has been changed.
They are also output when the status has been changed from an A/C unit side (with the remote controller).
They are output when the LonWorks Interface or the A/C unit power is reset.

Contents 0: Auto heat/cool 1: Heat 3: Cool 5: Dry 9: Fan

11. LonWorks Interface (CZ-CLNC2)

[nv7] Option 1 setting command
[nv9] Option 2 setting command

network input SNVT_switch nviOption1_00;
network input SNVT_switch nviOption1_01;
network input SNVT_switch nviOption1_02;
network input SNVT_switch nviOption1_03;
network input SNVT_switch nviOption2_00;
network input SNVT_switch nviOption2_01;
network input SNVT_switch nviOption2_02;
network input SNVT_switch nviOption2_03;

These input network variables are used to make the indoor unit option settings.

Two of the following 4 option settings can be selected: remote-controller prohibit, fan speed setting, air direction setting, and filter sign reset.

Make changes using the DIP switches on the main circuit board.

When option settings are not made from the LonWorks, it is not necessary to use these network variables.

	state	value	Start/stop operation	Temp. setting	Operating mode
Remote-controller prohibit	0	(Not used)	O	O	O
	1	100	×		
		120	O	×	
		140	×		
		150	O	O	×
		160	×		
		180	O	×	
		200	×		
		Other			

O :Permitted
×:Prohibited

Fan speed setting	(Not used)	120	Auto
		200	High
		150	Medium
		100	Low
		Other	

Air direction setting	(Not used)	200	Swing
		170	F1
		140	F2
		110	F3
		80	F4
		50	F5
		Other	Swing

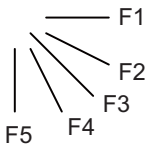

* Positions F4 and F5 can not be set for cool- and dry-mode operation.

Filter sign	Filter sign is reset when data is updated.

[nv8] Option 1 setting status notification
[nv10] Option 2 setting status notification

network output SNVT_switch nvoOption1_00;
network output SNVT_switch nvoOption1_01;
network output SNVT_switch nvoOption1_02;
network output SNVT_switch nvoOption1_03;
network output SNVT_switch nvoOption2_00;
network output SNVT_switch nvoOption2_01;
network output SNVT_switch nvoOption2_02;
network output SNVT_switch nvoOption2_03;

These output network variables provide notification of changes in the status of the indoor unit option settings.

Two of the following 4 option settings can be selected: remote-controller prohibit, fan speed setting, air direction setting, and filter sign reset.

Make changes using the DIP switches on the main circuit board.

They are output when the LonWorks Interface or A/C unit power is reset.

	state	value	Start/stop operation	Temp. setting	Operating mode
Remote-controller prohibit	0	0	O	O	O
	1	100	×		
		120	O	×	
		140	×		
		150	O	O	×
		160	×		
		180	O	×	
		200	×		

O :Permitted
×:Prohibited

Fan speed setting	1	120	Auto
		200	High
		150	Medium
		100	Low
		50	Very
		0	Stop

Air direction setting	1	200	Swing
		170	F1
		140	F2
		110	F3
		80	F4
		50	F5
		0	Stop

Filter sign	0	0	OFF
	1		ON

11. LonWorks Interface (CZ-CLNC2)

[nv11] Alarm notification

network output SNVT_switch nvoAlarm_00;
network output SNVT_switch nvoAlarm_01;
network output SNVT_switch nvoAlarm_02;
network output SNVT_switch nvoAlarm_03;

These output network variables are output when an alarm occurs at an indoor unit, and when the alarm is reset at an indoor unit.
They are output when the LonWorks Interface or A/C unit power is reset.

Contents state 0: Normal 1: Alarm value 0 at all times

[nv12] Indoor unit number with active alarm notification

network output SNVT_switch nvoAlarmIn_00;
network output SNVT_switch nvoAlarmIn_01;
network output SNVT_switch nvoAlarmIn_02;
network output SNVT_switch nvoAlarmIn_03;

These output network variables are output when an alarm occurs at an indoor unit.
They are output when the LonWorks Interface or A/C unit power is reset.

Contents state 0 at all times value Indoor unit number with active alarm × 2

* Value = 0 when no alarms are active.

[nv13] Room temperature notification

network output SNVT_temp_p nvoSpaceTemp_00;
network output SNVT_temp_p nvoSpaceTemp_01;
network output SNVT_temp_p nvoSpaceTemp_02;
network output SNVT_temp_p nvoSpaceTemp_03;

These output network variables are output when the indoor unit room temperature changes.
They are output when the LonWorks Interface or A/C unit power is reset.
When indoor units are under group control, the room temperature of the main unit in the group is output.

Contents
Valid range

Output range:	-35.0 - 92.5°C
Temp. units:	0.5°C

* Be aware that the output temperature range may vary according to the models of the outdoor and indoor units.
*When indoor units are under group control, the status is output from the main unit.

[nv14] A/C unit status notification

network output SNVT_count nvoInState_00;
network output SNVT_count nvoInState_01;
network output SNVT_count nvoInState_02;
network output SNVT_count nvoInState_03;

These output network variables are output when the A/C unit status changes.
They are output when the LonWorks Interface or A/C unit power is reset.

0	Normal communications in progress (no alarms)
1~255	According to alarm code table
300	Indoor unit not connected (initial communication in progress)

[nv15] Emergency stop

network output SNVT_switch nviAllInOff;

This input network variable is used to stop the indoor units in an emergency.
Remote-controller prohibit (start/stop prohibit) is enabled for the stopped indoor units.
The remote-controller prohibit (temperature setting, operating mode) status remains the same as before the units were stopped.
When emergency stop is canceled, remote-controller prohibit (start/stop prohibit) status returns to the status prior to emergency stop; however, the unit itself remains stopped.
If this function is not used, then it is not necessary to use this network variable.

Contents state 0: Cancel 1: Emergency stop value (Not used)

[nc49] Transmission interval setting

network input config SNVT_time_sec nciSndHrtBt;

This network configuration sets the interval for automatic data output. When the set time has elapsed, data is output automatically.
The network variables that are affected by this configuration are the following:

nvoOnOff_0? nvoSetpoint_0? nvoHeatCool_0?
nvoOption1_0? nvoOption2_0? nvoAlarm_0?
nvoAlarmIn_0? nvoSpaceTemp_0? nvoInState_0?

Contents

The valid range is 0.0 seconds to 6553.5 seconds. If 0.0 seconds is set, automatic data update is disabled.
The transmission interval setting is the same for all network variables.
When the set time has elapsed, above all network variables are output.

[nc52] Setting of minimum time secured for transmission

network input config SNVT_time_sec nciMinOutTm;

This network configuration determines the minimum interval that is secured for output network variables.
The network variables that are affected by this configuration are the following:

nvoOnOff_0? nvoSetpoint_0? nvoHeatCool_0?
nvoOption1_0? nvoOption2_0? nvoAlarm_0?
nvoAlarmIn_0? nvoSpaceTemp_0? nvoInState_0?

Contents

The valid range is 0.0 seconds to 6553.5 seconds.
The minimum time secured for transmission is independent for each network variable. It is not valid between different network variables.

8. Locations Where Neuron ID is Applied

The Neuron ID is applied in the following 3 locations.

(1) Packaging box
(2) Top panel lid
(3) On the main circuit board Neuron chip

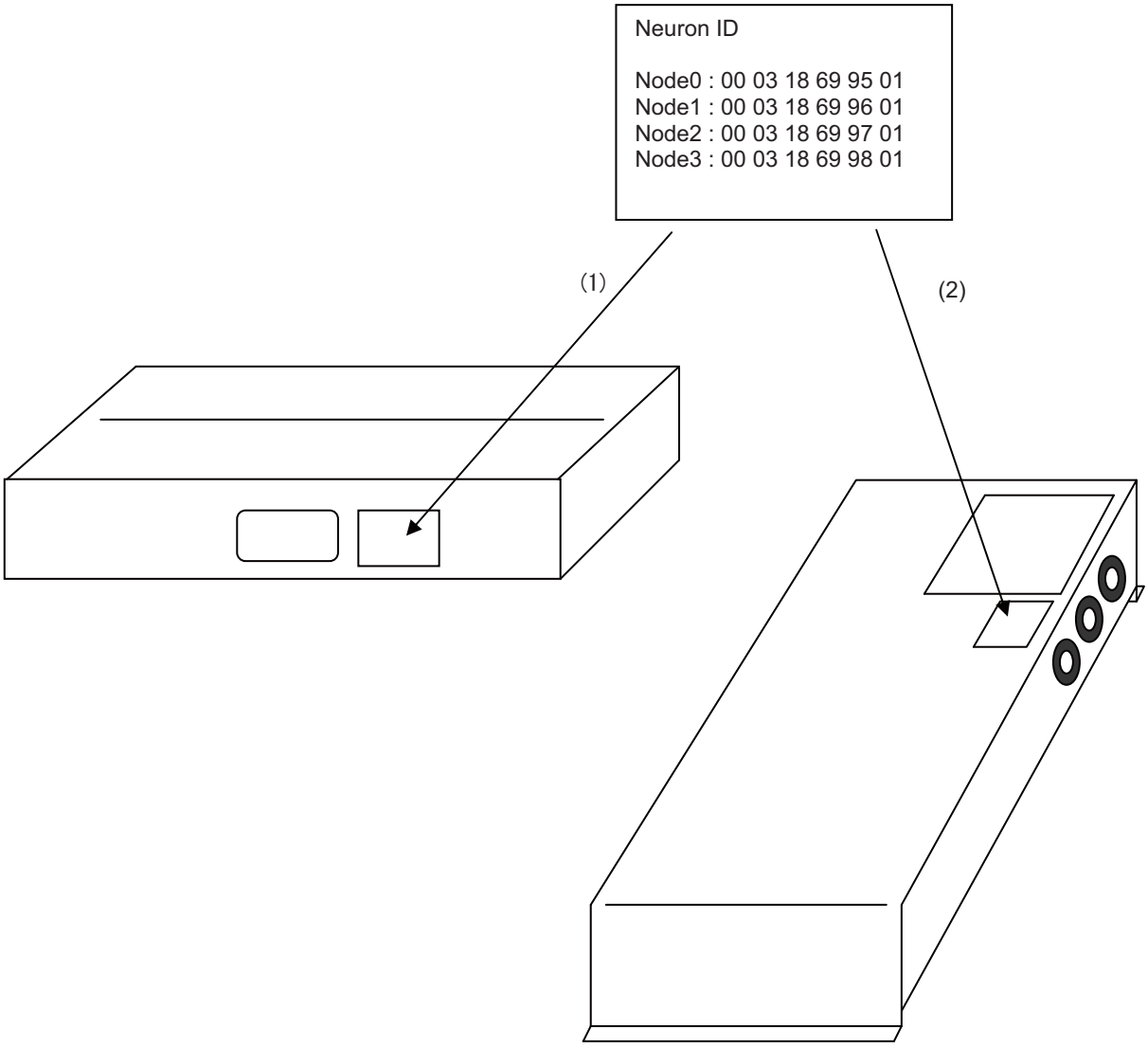

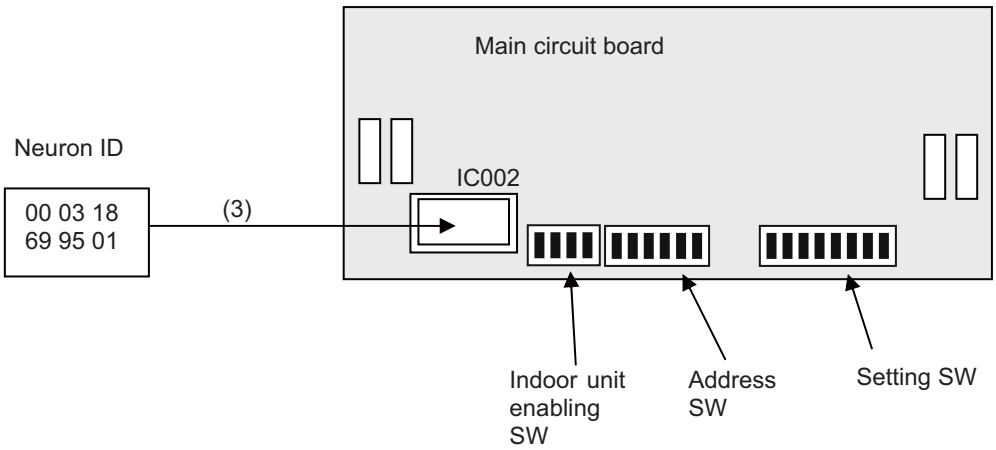

Seri-Para I/O Unit for outdoor unit (CZ-CAPDC2) INSTALLATION INSTRUCTIONS

Procedures and Technical Points for Test Run

Warnings and Cautions

The precautions given in this manual consist of specific "Warnings" and "Cautions." They provide important safety-related information and are important for your safety, the safety of others, and trouble-free operation of the system. Be sure to strictly observe all safety procedures. The labels and their meanings are as described below.

⚠ **Warning** This symbol refers to a hazard or unsafe procedure or practice which can result in severe personal injury or death.

⚠ **Caution** This symbol refers to a hazard or unsafe procedure or practice which can result in personal injury or product or property damage.

∗ After installation is completed, perform a test run to check for operating trouble. As you do, use the central control device Operation Manual and explain operating procedures to the customer. Then request that the customer store the Procedures and Technical Points for Installation of LonWorks Interface (Electrical Work) together with the central control device Operation Manual.

3

⚠ Warning

* Be sure to arrange installation from the dealer where the system was purchased or using a professional installer. Electric shock or fire may result if an inexperienced person performs any installation or wiring procedures incorrectly.

*Only a qualified electrician should attempt to connect this system, in accordance with the instructions in "technical standards related to electrical design," "local wiring regulations," and this manual. Electric shock or fire may result if electrical work is not correctly done.

ELECTRICAL WIRING REQUIREMENTS

Precautions regarding electrical wiring

*Use a dedicated electrical circuit. If the electrical circuit capacity is insufficient a danger of electric shock and fire may be present.

*Use the specified cables (type and wiring diameter) for the electrical connections, and connect the cables securely. Run and fasten the cables securely so that external forces or pressure placed on the cables will not be transmitted to the connection terminals. Overheating or fire may result if connections or attachments are not secure.

*The installation location requires the use of a circuit breaker. Failure to use a circuit breaker may result in electric shock or fire.

*Circuit breaker must be incorporated in the fixed wiring in accordance with the wiring regulations. The circuit breaker must be an approved 10-16 A, having a contact separation in all poles.

12. Seri-Para I/O unit for outdoor unit (CZ-CAPDC2)

1. Installing the Seri-Para I/O Unit for outdoor unit

<Note 1> Do not run the inter-unit control wiring, input/output lines, and power cables through the same conduit, or place the cables near one another. Doing so can cause malfunction.
<Note 2> Install the Seri-Para I/O Unit for outdoor unit away from any sources of electrical noise.
<Note 3> Avoid installing in any locations where the interface may come into contact with water, in locations where water accumulates, or in any extremely humid locations.
<Note 4> Avoid installing in any location that is subject to excessive vibration or physical impacts.

Note that when the Seri-Para I/O Unit for outdoor unit is used incorporated in the control panel, it is necessary to make local procurement of the control panel that can accommodate required number of the Seri-Para I/O Unit for outdoor unit.

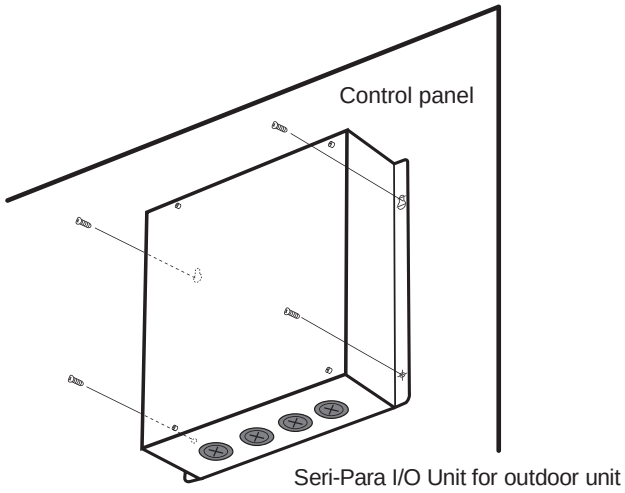

2. Wiring for the Seri-Para I/O Unit for outdoor unit

For safety, turn off the main power supply (breaker) before installing or removing the Seri-Para I/O Unit for outdoor unit.

Remove the 4 screws from the body and remove the top cover.

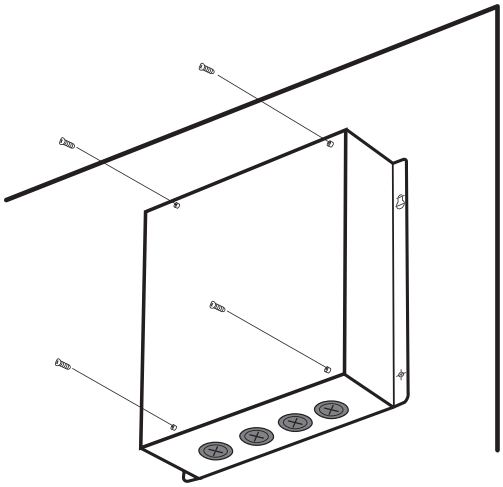

12. Seri-Para I/O unit for outdoor unit (CZ-CAPDC2)

<Arrangement of components on the Seri-Para I/O Unit for outdoor unit board>

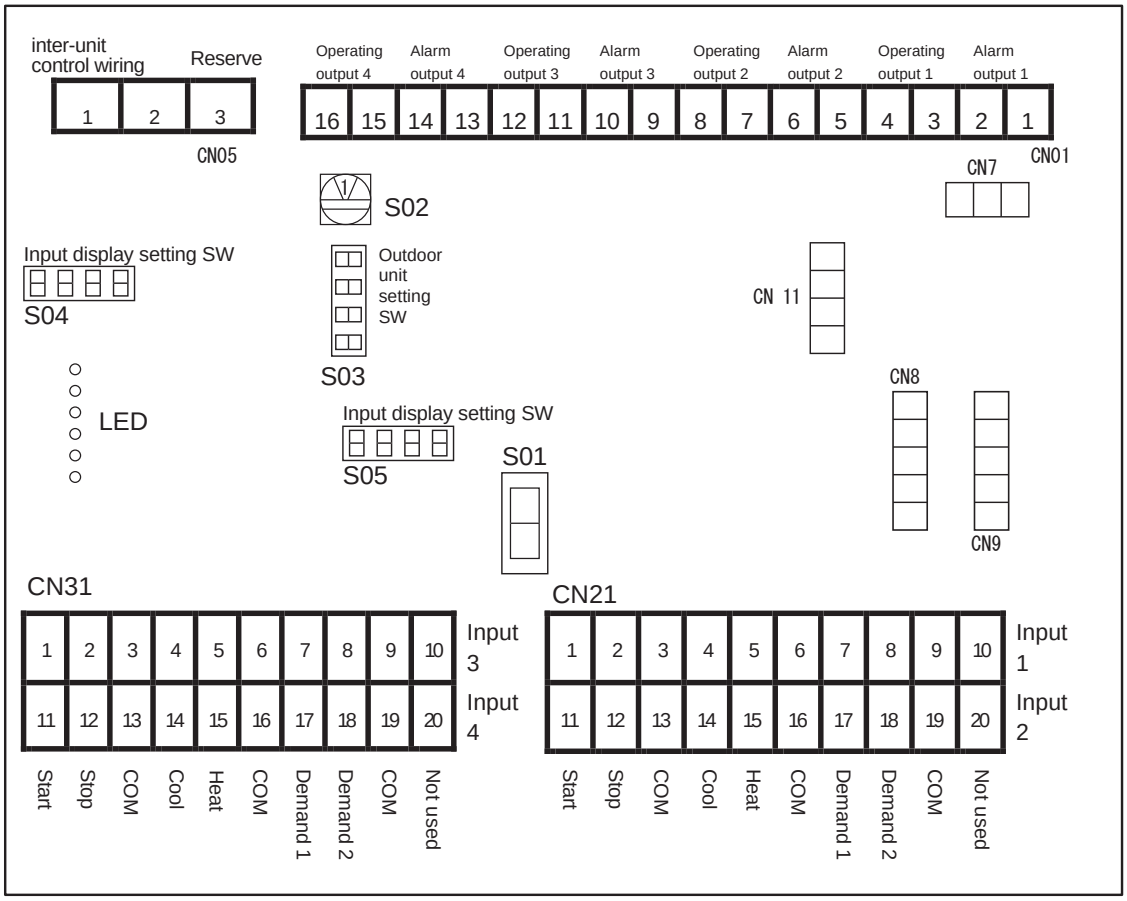

(1) Connecting the power

This interface can use either 110-120V AC power or 220-240V AC power. Insert the transformer primary-side (red 5P connector) into either the 110-120V AC CN (red connector labeled “CN 9”) or the 220-240V AC CN (red connector labeled “CN8”) on the circuit board. Check the power voltage that will be used before changing it. It is initially set for 220-240V AC power.

Caution

- Be careful: If the combination of the power voltage and the transformer primary-side selection is incorrect, the interface may be damaged.
- Turn the power off before changing the connector.
- This is a high-voltage circuit, and there is danger of electric shock. Do not touch the circuit when the power is on.
- Do not touch the power connector or any other protruding metal parts when the power is on.
- Tune the power on again when a defective communication or a mulfunction is generated.

12. Seri-Para I/O unit for outdoor unit (CZ-CAPDC2)

<Arrangement of transformer, power connector, and terminal block>

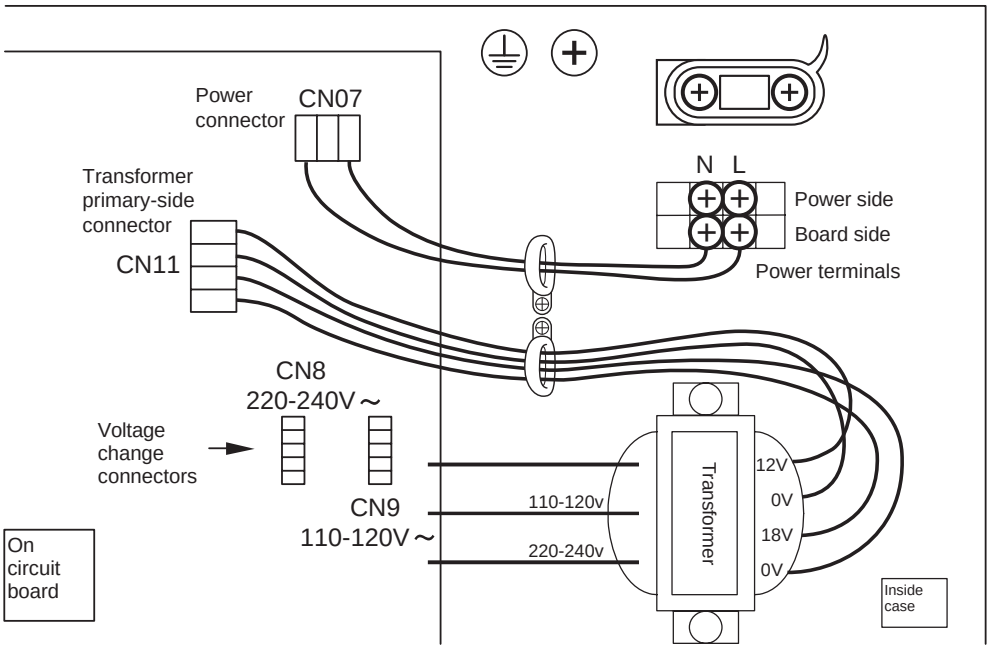

Changing the voltage:

- For 110-120V AC specifications, connect the 5P connector from the transformer to the 110-120V AC side, as shown in the figure below. (Because of the danger of electric shock, turn the power off before changing the connector.)

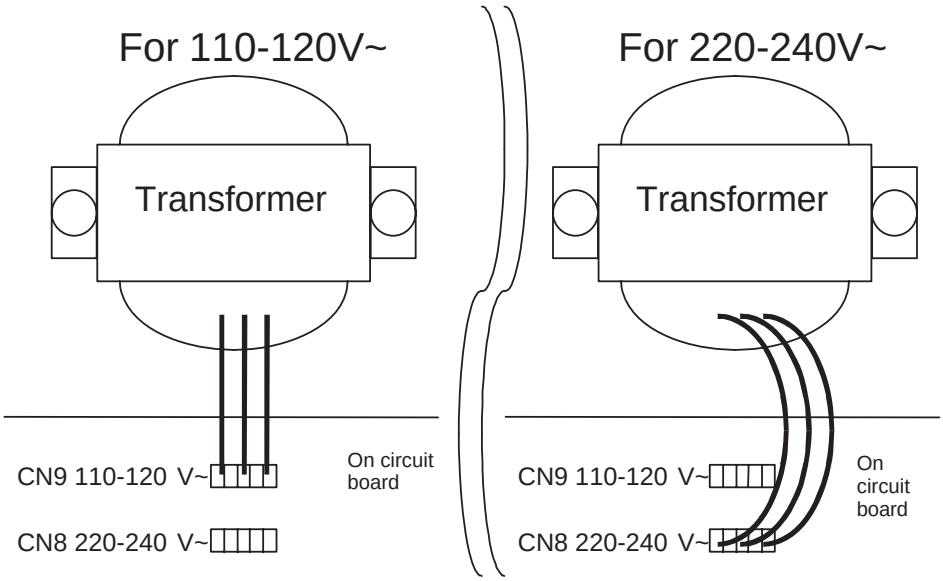

12. Seri-Para I/O unit for outdoor unit (CZ-CAPDC2)

<Wiring Procedure>

- Connect the power supply lines to the L and N power suplly terminals (the power supply neutral to the N terminal.)
- Connect an earth ground line to the screw.

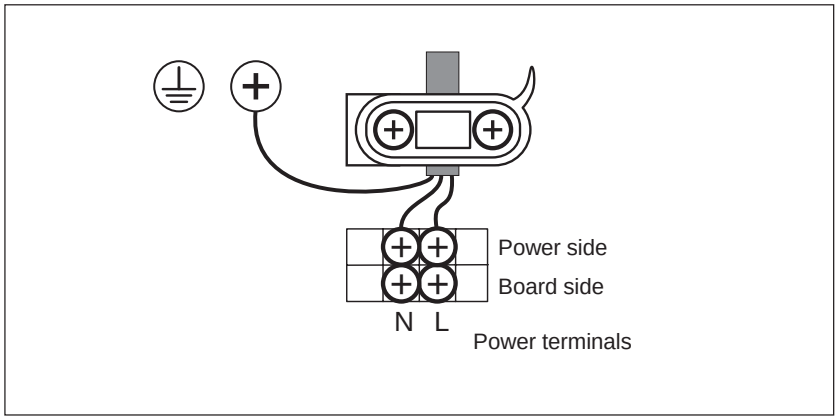

(2) Connecting the Seri-Para I/O Unit for outdoor unit and the inter-unit control wiring

- Use the inter-unit control wiring to connect the Seri-Para I/O Unit for outdoor unit to the A/C units.
- For the inter-unit control wiring, use twin-core 0.5– 2 mm^2 wires and shielded wiring. (Maximum length 1km.) There is no polarity to the signal wires.

  Do not use the same cable for the inter-unit control wiring and power cables. Do not run them through the same conduit or place the cables near one another. For the inter-unit control wiring, use signal wires that are clearly differentiated from the power cables.

<Signal wire type> Thickness: 0.5 – 2.0 mm^2

- CCV Vinyl-insulated vinyl-sheath control cable
- VCTF Vinyl cabtyre round cable
- VCT 600V vinyl cabtyre cable
- VVR Vinyl-insulated vinyl-sheath round cable
- MVVS Braided shielded instrumentation cable
- CPEVS Shielded polyethylene-insulated vinyl-sheath cable

12. Seri-Para I/O unit for outdoor unit (CZ-CAPDC2)

<Wiring procedure>

- Inter-unit control wiring (Use the shielded wiring)
- Connect the inter-unit control wiring connector terminals for the indoor or outdoor unit to CN05 1 and 2 on the board's inter-unit control wiring terminal block (for communications).

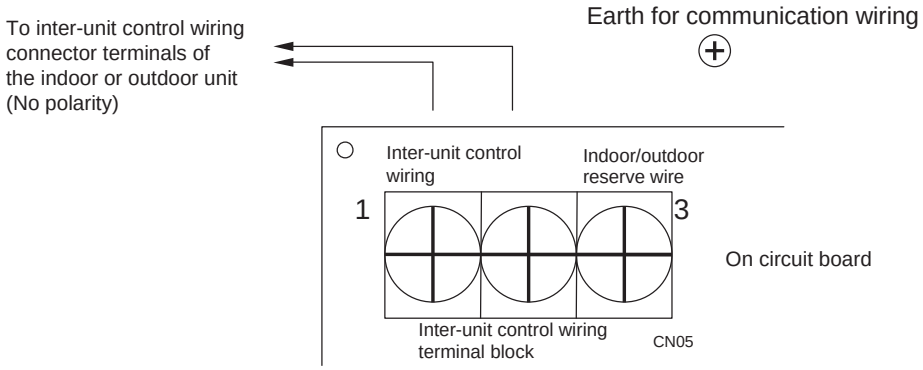

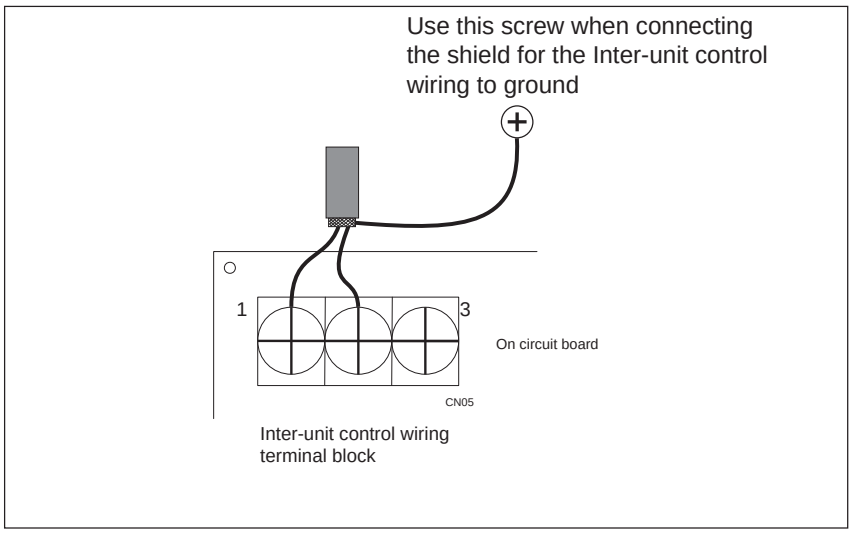

Check that the power cable (110-120/220-240V AC) has not been wired to the inter-unit control wiring terminal block. If power is accidentally applied here, the board fuse (F01) will blow in order to protect the circuit board. After correcting the power cable connection, wire by connecting the inter-unit control wiring to CN05 1 to 3 (using the indoor/outdoor reserve wire).

(Be sure to turn the power off before beginning work.)

12. Seri-Para I/O unit for outdoor unit (CZ-CAPDC2)

<Basic wiring diagram>

- The diagram below shows a sample wiring arrangement of inter-unit control wiring for the Seri-Para I/O Unit for outdoor unit.
- One system can include a maximum of 30 connected outdoor units and 64 connected indoor units.
- One Seri-Para I/O Unit for outdoor unit can be connected to a maximum of 4 outdoor units in 1 system. A maximum of 8 Seri-Para I/O Unit for outdoor units can be connected to control up to 30 outdoor units.

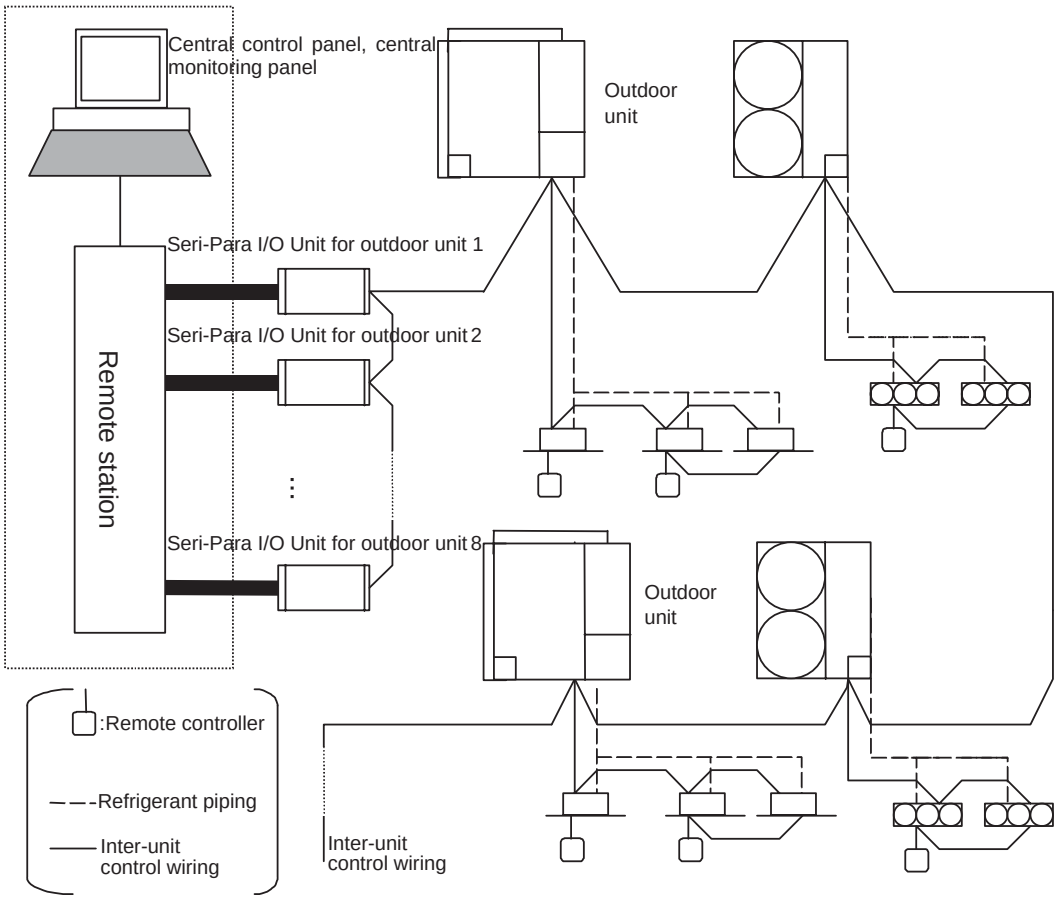

12. Seri-Para I/O unit for outdoor unit (CZ-CAPDC2)

(3) Connections between the Seri-Para I/O Unit for outdoor unit and external connectors(central control panel, central monitoring panel)

Name	Input/output item	Seri-Para I/O Unit for outdoor unit side		Equipment (central control panel, central monitoring panel) side		
		Input/output condition	Treminal No.	Separation terminal	Sample circuit	Input/output condition
Contact input/output terminal	Status output	Operating output 1 - 4 No-voltage a-contact output Allowable contact voltage and current: 30 V, 1 A Minimum applied load: 1V, 1 mA	CN01-3,01-7, CN01-11,01-15 CN01-4,01-8, CN01-12,01-16		Digital input	Response time for start/stop input: Max. 20 s
		Alarm output 1 - 4 No-voltage a-contact output Allowable contact voltage and current: 30 V, 1 A Minimum applied load: 1V, 1 mA	CN01-1,01-5, CN01-9,01-13 CN01-2,01-6, CN01-10,01-14		Digital input	Response time for start/stop input: Max. 20 s
	Control input	All-start input (pulse/static) Photocoupler input Allowable contact voltage and current: DC 24V, 10 mA Switch 01 is set as a no-voltage contact (setting when unit is shipped).	CN21-1,21-11, CN31-1,31-11 CN21-2,21-12, CN31-2,31-12 CN21-3,21-13, CN31-3,31-13			Pulse width: 1 s or more No-voltage a-contact output
		All-start input All-stop input (pulse/static) Photocoupler input Allowable contact voltage and current: DC 24 V, 10 mA Switch 01 is set as DC 24 V contact.	CN21-1,21-11, CN31-1,31-11 CN21-2,21-12, CN31-2,31-12 CN21-3,21-13, CN31-3,31-13		24V COM	Pulse width: 1 s or more No-voltage a-contact output

3

12. Seri-Para I/O unit for outdoor unit (CZ-CAPDC2)

Name	Input/output item	Seri-Para I/O Unit for outdoor unit side		Equipment (central control panel, central monitoring panel) side		
		Input/output	Terminal No.	Separation terminal	Sample circuit	Input/output condition
Contact input/output terminal	Control input (static)	Cool input Heat input (Demand 1, demand 2) Photocoupler input Allowable contact voltage and current: DC 24 V, 10 mA Switch 01 is set as a no-voltage contact (setting when unit is shipped).	CN21-4,21-14, (21-7,21-17) CN31-4,31-14, (31-7,31-17) CN21-5,21-15, (21-8,21-18) CN31-5,31-15, (31-8,31-18) CN21-6,21-16, (21-9,21-19) CN31-6,31-16, (31-9,31-19)			Pulse width: 1 s or more No-voltage a-contact output
		Cool input Heat input (Demand 1, demand 2) Photocoupler input Allowable contact voltage and current: DC 24 V, 10 mA Switch 01 is set as DC 24 V contact.	CN21-4,21-14, (21-7,21-17) CN31-4,31-14, (31-7,31-17) CN21-5,21-15, (21-8,21-18) CN31-5,31-15, (31-8,31-18) CN21-6,21-16, (21-9,21-19) CN31-6,31-16, (31-9,31-19)		24V COM	Pulse width: 1 s or more No- voltage a-contact output

Note: Demand 1 and 2 (shown in parentheses) are listed together because their structure is the same as cool/heat input.

- The length of digital signal wiring between the Seri-Para I/O Unit for outdoor unit and the equipment side must be 100 m or less.

3

12. Seri-Para I/O unit for outdoor unit (CZ-CAPDC2)

* Input terminal block table

	Input 1	Input 2	Input 3	Input 4
All-start	CN21-1 CN21-3	CN21-11 CN21-13	CN31-1 CN31-3	CN31-11 CN31-13
All-stop	CN21-2 CN21-3	CN21-12 CN21-13	CN31-2 CN31-3	CN31-12 CN31-13
Cool	CN21-4 CN21-6	CN21-14 CN21-16	CN31-4 CN31-6	CN31-14 CN31-16
Heat	CN21-5 CN21-6	CN21-15 CN21-16	CN31-5 CN31-6	CN31-15 CN31-16
Demand 1/ thermostat OFF	CN21-7 CN21-9	CN21-17 CN21-19	CN31-7 CN31-9	CN31-17 CN31-19
Demand 2/ remote-con-troller inhibit	CN21-8 CN21-9	CN21-18 CN21-19	CN31-8 CN31-9	CN31-18 CN31-19

* Polarity for input wiring

	Input (start, stop, cool, heat, demand 1/thermostat OFF demand 2/remote-controller inhibit)	COM
S01-direction no-voltage contact	Because it is a no-voltage contact, there is no polarity.	Because it is a no-voltage contact, there is no polarity.
S01-direction DC 24 V contact	Positive	COM

12. Seri-Para I/O unit for outdoor unit (CZ-CAPDC2)

3. Setting Switches

- Setting switch S01 (Change the voltage before turning on the power.)

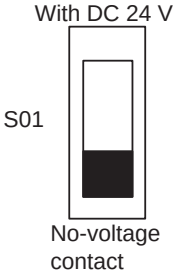

- S01 (contact input voltage change SW) (Set as a no-voltage contact when unit is shipped.)
1. When using the input terminal as a no-voltage a-contact, set switch S01 to the no-voltage contact side.
2. When using the input terminal as a DC 24 V contact, set switch S01 to the DC 24 V voltage side.

- Setting switches S02 and S03

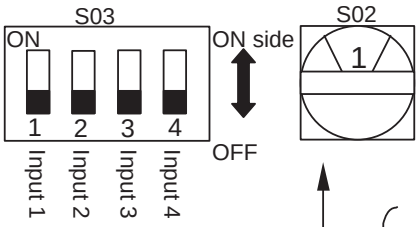

- S02 (outdoor SP address setting SW)
This switch sets the Seri-Para I/O Unit for outdoor unit address. (Refer to *1.)
- S03 (outdoor unit setting SW)
This switch sets the connected outdoor units. Be sure to turn the SW to the ON side for each input that will be used. (Note: If input is turned OFF, no input or output occurs.)

1: Outdoor unit addresses 1 - 4
2: Outdoor unit addresses 5 - 8
3: Outdoor unit addresses 9 - 12
4: Outdoor unit addresses 13 - 16
5: Outdoor unit addresses 17 - 20
6: Outdoor unit addresses 21 - 24
7: Outdoor unit addresses 25 - 28
8: Outdoor unit addresses 29 - 30
(0 is set the same as 1. 9 is set the same as 8.)

(*1) Relationship between the input/output terminal block (input/output 1 - 4) and the Outdoor unit address when S02 (outdoor SP address setting SW) is changed

S02 (outdoor SP address setting SW)	Input/output terminal block number				
	1	2	3	4	
1	1	2	3	4	System address (outdoor unit address)
2	5	6	7	8	
3	9	10	11	12	
4	13	14	15	16	
5	17	18	19	20	
6	21	22	23	24	
7	25	26	27	28	
8	29	30	30	30	

* Set the S02 not to overlap.

3

12. Seri-Para I/O unit for outdoor unit (CZ-CAPDC2)

- Setting switch S04

Input display setting SW

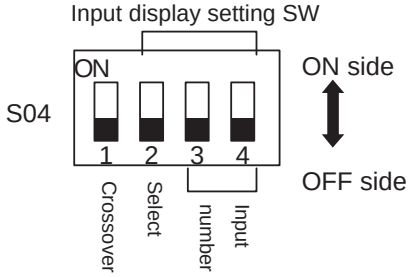

- S04-1 (OFF when unit is shipped.)

Crossover	OFF	No crossover process (normal)
	ON	Crossover process performed (Connect only to terminal block input 1.)

* Crossover process: Performs the same process as if terminal block inputs 1 - 4 were wired across one another. (Processing proceeds as if inputs 2 - 4 were the same as input 1.) Even if there is crossover input, input and output operations are not performed if the S03 input is turned OFF.

- S04-2 (OFF when unit is shipped.)

Select	OFF	Displays the status of communications with the outdoor unit corresponding to LED 1 - 4.
	ON	Using the LED (6), displays the input status (start, stop, etc.) for the terminal block with the input number selected.

- S04-3 and 4 input number selection: Select the input number to check.

	S04-3	S04-4
Input 1	OFF	OFF
Input 2	OFF	ON
Input 3	ON	OFF
Input 4	ON	ON

* The following information is displayed by the LED, according to the settings of S04-2 (select) and S04-3 and 4 (input number).

(If the select switch is ON, the LED illuminate according to the signal that is being input at the input terminal block with the selected number.)

Select	OFF (normal)	ON (for checking input)
LED explanation	1 ○ 2 ○ 3 ○ 4 ○ ○ ○ Status of communications with the outdoor unit corresponding to each number Normal: Lit Trouble: Flashing	Start ○ Stop ○ Cool ○ Heat ○ Demand 1 ○ Demand 2 ○ Input present: Lit No input: Not lit

Note: If S04-2 (select) is ON, there are cases when communications errors may go unnoticed. Therefore, leave this switch OFF when checking normal communications.

12. Seri-Para I/O unit for outdoor unit (CZ-CAPDC2)

• Setting switch S05

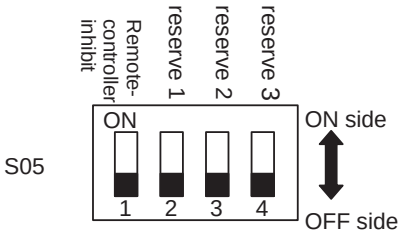

• S05-1 (OFF when unit is shipped.)
Changes the remote-controller inhibit switch input as shown below.

Remote-controller prohibit	OFF	Demand 1/demand 2
	ON	Thermostat OFF (*1)/remote-controller inhibit

*1 This input forces the thermostat to turn OFF (100% demand).

12. Seri-Para I/O unit for outdoor unit (CZ-CAPDC2)

4. Detailed Explanation of Address Setting SW (S02)

The Seri-Para I/O Unit for outdoor unit addresses must be set (S02) when connecting and using multiple Seri-Para I/O Unit for outdoor units.

* The example here shows 8 Seri-Para I/O Unit for outdoor units and 30 outdoor units connected.

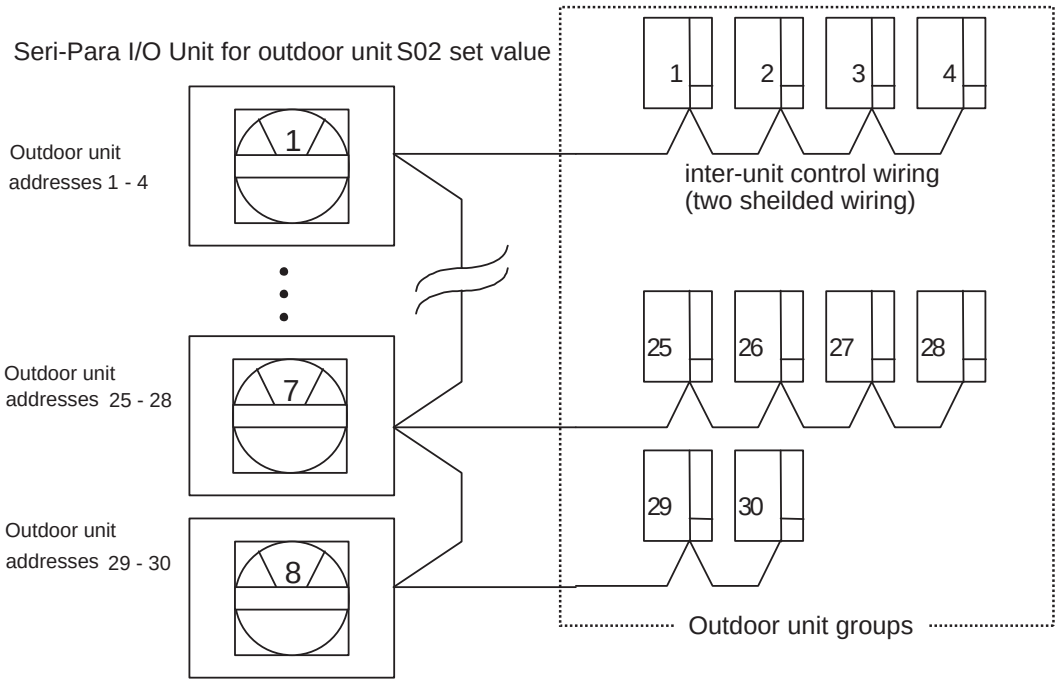

5. Test Run

1. Turn on the power to all A/C. Check that all test-runs are completed.
2. After the A/C test-runs are completed, follow the procedure below.
3. Turn on the power to the Seri-Para I/O Unit for outdoor unit. (Complete settings before turning on the power.)
4. If there is no trouble with communications between the Seri-Para I/O Unit for outdoor unit and the outdoor units, then generate all-start input from the Seri-Para I/O Unit for outdoor unit. (Connect “Start” and “COM” on the input terminal block.) Check the operating lamps. Check all inputs in the same way. To check inputs, set the input number that you wish to check with settings switches S04-3 and 4 (input number switches). Then switch S04-2 (select switch) to ON and check the input. (Refer to **3. Setting Switches**.)

- Approximately 3 minutes after trouble occurs in the communications between the Seri-Para I/O Unit for outdoor unit and the outdoor units, the communications-check LEDs will begin flashing.
  When these LEDs are flashing, check and correct the communications line connections and power for the outdoor units which correspond to the flashing LEDs.

12. Seri-Para I/O unit for outdoor unit (CZ-CAPDC2)

6. External Dimensions

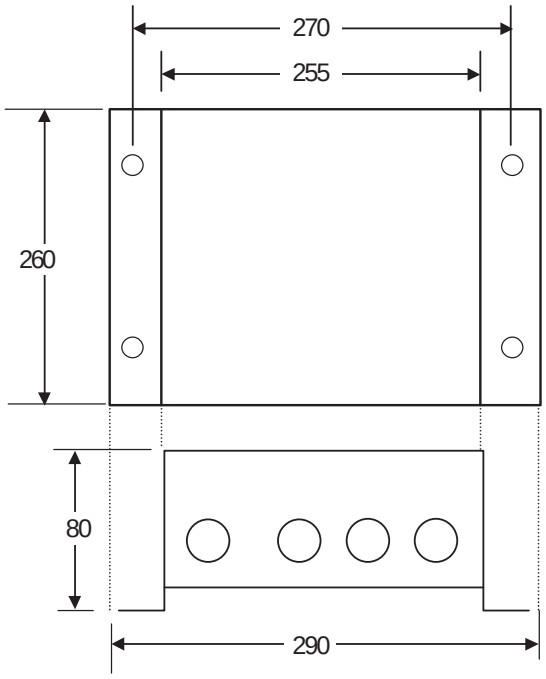

H80 x W290 x D260 mm

7. Product Specifications

Specifications

Rated voltage:	Single-phase 110-120 / 220-240 V ~
Rated frequency:	50 / 60 Hz
Power consumption:	Approx. 18 W
Weight:	3.2 kg

13. Seri-para I/O Unit for each indoor unit (CZ-CAPBC2)

For Your Safety

Read the following instructions carefully, and carry out secure installation and electrical work.

The precautions given in this manual consist of specific "⚠Warning" and " ⚠ Caution". They provide important safety-related information. Be sure to strictly observe all safety procedures. The labels and their meanings are as described below.

⚠**Warning** This symbol refers to a hazard or unsafe procedure or practice that can result in severe personal injury or death.

⚠**Caution** This symbol refers to a hazard or unsafe procedure or practice that can result in personal injury or product or property damage.

After installation is completed, perform a test run to check for operating trouble. Explain operating procedures to the customer and request the customer to store the Procedures for Installation (Electrical Work) and Test Operation of Seri-Para I/O Unit for each indoor unit.

⚠Warning

- Be sure to arrange installation by the dealer where the system was purchased or by a professional installer. Electric shock or fire may result if an inexperienced person performs any installation or wiring procedures incorrectly.
- Be sure that this unit is securely installed in accordance with the Procedures for Installation (Electrical Work) and Test Operation of Seri-Para I/O Unit for each indoor unit. Electric shock or fire may result if any installation or wiring procedures are incorrectly performed.
- Only a qualified electrician should attempt to connect this system, in accordance with the instructions in this manual. Insufficient electrical circuit capacity or incorrect installation may cause electric shock and fire.
- Use the specified cables for the electrical connections, and connect the cables securely. Run and fasten the cables securely so that external forces or pressure placed on the cables will not be transmitted to the connection terminals. Overheating or fire may result if connections or attachments are not secure.

⚠Caution

- Depending on the installation conditions and location, an earth leakage breaker may be required. If an earth-leakage breaker is not installed, there is a danger of electric shock or fire.
- Ground yourself to discharge static electricity before performing any wiring.

Accessories

No.	Accessory	Quantity	No.	Accessory	Quantity
①	T10 cable (150mm) *1 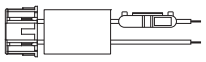 with a current fuse ※1	1	④	Wire joints	2
②	T10 cable (100mm) *2 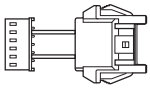	1	⑤	Installation Plan (this manual)	1
③	Installation Screws (tapping screws ϕ4x8mm)	4			

※1 In the case of melting-down of fuse cables due to a short-circuit, wrong wiring or excessive current, change current to 125V/0.5A.

*1 Panasonic model or SANYO 4-series or newer type.

*2 SANYO 3-series type.

Installing

Installation Screws
(tapping screws x 4
Accessory components ③)

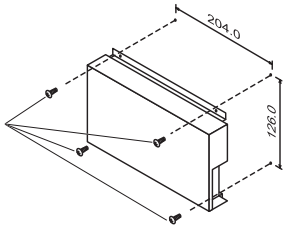

Note:

- Do not run the communication lines and power cables through the same conduit, or twist those cables together, or place the cables near one another. It can cause malfunction.
- Install it away from any sources of electrical noise.
- Avoid installing in any locations where the unit may come into contact with water, or in any extremely humid locations.
- Avoid installing in any location that is subject to excessive vibration or physical impacts.

13. Seri-para I/O Unit for each indoor unit (CZ-CAPBC2)

Wiring

Removing the top cover

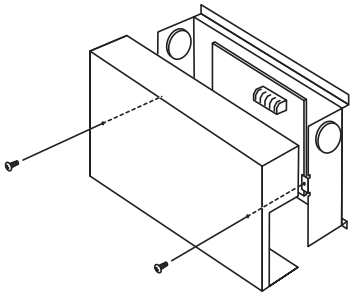

Arrangement of the terminal block and switches

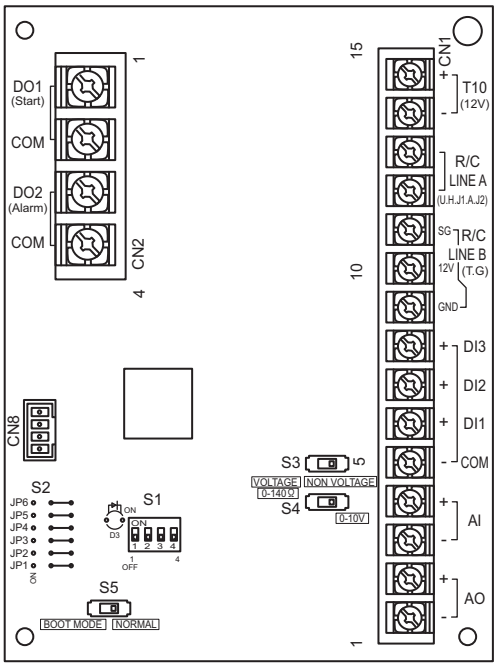

CN1	15	+	T10(12V)	12 V power supply
	14	-		
	13		R/C LINE A	Remote control line A
	12			
	11	SG	R/C LINE B	Remote control line B
	10	12V		
	9	GND		
	8	+	DI 3	Digital input
	7	+	DI 2	
	6	+	DI 1	
	5	-	COM	
	4	+	AI	Analog input (Change temperature setting)
	3	-		
	2	+	AO	Analog output (Room temperature monitor)
	1	-		

CN2	1	DO1	Digital output 1 (Start output)
	2	COM	
	3	DO2	Digital output 2 (Alarm output)
	4	COM	

S1	Control type setting switch
S2	Detail setting switch
S3	Voltage present / absent switch
S4	Set temperature input select switch
S5	Not used

CN8	Not used

Caution:

- Always use round connectors with insulator holddown for wiring to the terminal block. (CN1 uses M3.0, CN2 uses M3.5)

Securing the wiring

Make sure to secure all wiring using the clip wires inside the unit, and the cable clamps outside the unit.

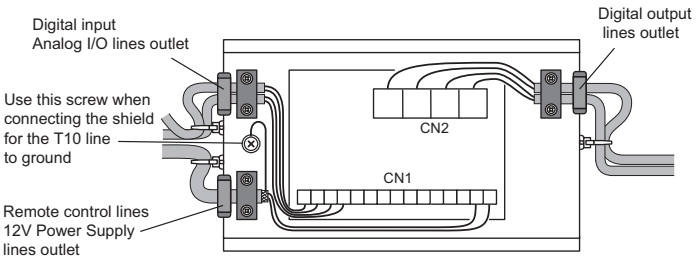

Caution:

- If using high-voltage wiring such as AC power supply (Digital output), make sure that wiring does not contact any component on the circuit board, or any low-voltage (CN1) wiring.

3

13. Seri-para I/O Unit for each indoor unit (CZ-CAPBC2)

(1) Connecting to indoor units

- Do not run the control lines and power cables in the same conduit, do not connect those lines and cables with the same wire, and do not place those lines and cables close together. (Maintain a minimum 30 cm separation.)
- Wiring specifications
  Type: vinyl insulated cord with sheath
  Thickness: 0.5 to 2.0 mm^2
  Length: 100 m maximum
  * Use the shielded wire for the 12 V power cable (T10).

Connect to model of Panasonic or SANYO 4-series or newer type

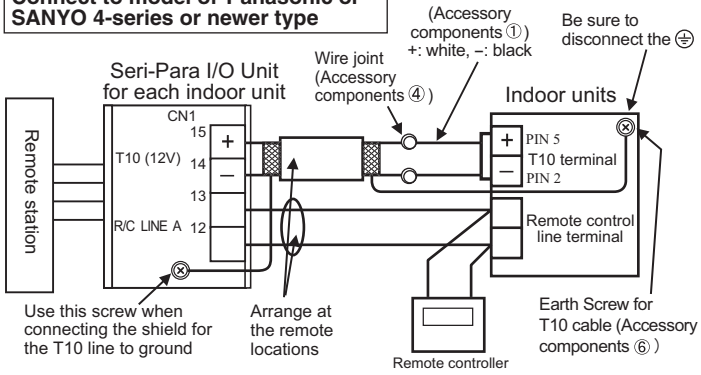

- Remote control line
  Connect terminals 12 and 13 (Remote Control Line A) on the Seri-Para I/O Unit terminal block CN1 to the Remote Control terminals of the indoor unit. There is no polarity for the signal wires.
- 12V power supply line
  Connect terminals 14 and 15 (12V Power Supply Line) on the Seri-Para I/O Unit terminal block CN1 to the T10 terminal of the indoor unit. The polarity of the connection is important; make sure to connect the + and - terminals correctly.
  Wiring the polarity incorrectly may result in damage to the units.

Connect to model of SANYO 3-series type

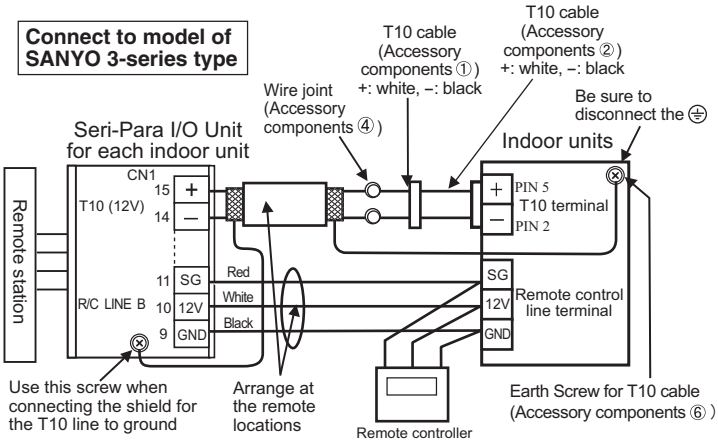

- Remote control line
  Connect terminals 9, 10, and 11 (Remote Control Line B) on the Seri-Para I/O Unit terminal block CN1 to the Remote Control terminals of the indoor unit. The polarity of the connection is important; make sure to connect the GND, 12V and SG correctly.
  Wiring the polarity incorrectly may result in damage to the units.
- 12V power supply line
  Connect terminals 14 and 15 (12V Power Supply Line) on the Seri-Para I/O Unit terminal block CN1 to the T10 terminal of the indoor unit. The polarity of the connection is important; make sure to connect the + and - terminals correctly.
  Wiring the polarity incorrectly may result in damage to the units.

3

13. Seri-para I/O Unit for each indoor unit (CZ-CAPBC2)

Cautions

* In addition to the Seri-Para I/O Unit, be sure to install a remote control or centralized control device (system controller, etc.) in the indoor unit
* Two or more Seri-Para I/O Units cannot be linked within a remote control line.
* The Seri-Para I/O Unit cannot be used with a control device which uses the T10 terminal of the indoor unit (example: indoor unit relay board, schedule timer, etc.)

(2) Connecting to the Remote Stations

- Do not run the control lines and power cables in the same conduit, do not connect those lines and cables with the same wire, and do not place those lines and cables close together. (Maintain a minimum 30 cm separation.)

Name	Input/ output item	Seri-Para I/O Unit side		Remote Station side	
		Input/output conditions	Terminal number	Example Circuit	Input/output conditions
Digital input/output terminal	Digital input ※1	DI1 Input DI2 Input DI3 Input Voltage a-contact static or Voltage a-contact pulses Allowable contact voltage and current : DC 24 V, 10 mA Voltage present / absent switch : S3 Voltage absent : set to NON VOLTAGE Voltage present : set to VOLTAGE	• For voltage absent input (factory default) Digital Input CN1-8 DI 3 CN1-7 DI 2 CN1-6 DI 1 CN1-5 COM • For voltage present input Digital Input CN1-8 DI 3 CN1-7 DI 2 CN1-6 DI 1 CN1-5 COM	DC12-24V GND	Voltage present 12 to 24V or Voltage absent When pulse input: 200 ms minimum
	Digital output ※2	Start output Alarm output No-voltage a-contact static Allowable contact voltage and current : AC 240 V, 3A DC 24 V, 3A (Minimum load 10mA)	CN2-1 DO 1 CN2-2 COM CN2-3 DO 2 CN2-4 COM	Digital input Digital input	
Analog input/output terminal	Analog input ※3	Indoor temperature setting input Input voltage : 0 to 10V or 0 to 140 Ω Temperature setting range: Within the indoor units temperature setting range Temperature reading: In steps of 1°C Set temperature input select switch : S4 Voltage level input: set to 0 to 10V Resistance connection : set to 0 to 140 Ω	A/D converter CN1-4 AI+ CN1-3 AI-	Analog output FG	For analog inputs, use within 0.1% of reference accuracy
	Analog output ※4	Indoor temperature monitor output Output current : 4 to 20 mA Temperature indication range : 5 to 36 °C, 0.5 °C step	D/A converter CN1-2 AO+ CN1-1 AO-	Insulated analog input FG	Allowable load: 240 Ω maximum

3

13. Seri-para I/O Unit for each indoor unit (CZ-CAPBC2)

※ 1 Digital input

- Select the control type using control type setting switch S1, according to the table below.

Control type	Input1 (DI 1)		Input2 (DI 2		Input3 (DI 3)		Voltage a-contact static/pulses ※1
	(open) ➡ (close)	(close) ➡ (open)	(open) ➡ (close)	(close) ➡ (open)	(open) ➡ (close)	(close) ➡ (open)	
0	Start Fan low	Indoor units stop when all of Input 1, 2, 3 are open	Start Fan medium	Indoor units stop when all of Input 1, 2, 3 are open	Start Fan high	Indoor units stop when all of Input 1, 2, 3 are open	All input: static
1	Start Prohibit R/C Start/Stop	Stop Prohibit R/C Start/Stop	Start Accept R/C Start/Stop	Stop Prohibit R/C Start/Stop	Stop Prohibit R/C Start/Stop	-	Input 1, 2: static Input 3: pulse
2	Start Prohibit R/C Start	Stop Prohibit R/C Start/Stop	Accept R/C Start/Stop	Stop Prohibit R/C Start/Stop	Stop Prohibit R/C Start/Stop	-	Input 1, 2: static Input 3: pulse
3	Start <-> Stop Prohibit R/C Start/Stop	-	Start <-> Stop Accept R/C Start/Stop	-	Stop Prohibit R/C Start/Stop	-	All input: pulse
4	Start Prohibit R/C Start/Stop	-	Start Accept R/C Start/Stop	-	Stop Prohibit R/C Start/Stop	-	
5	Start Prohibit R/C Start	-	Accept R/C Start/Stop	-	Stop Prohibit R/C Start/Stop	-	
6	Start Accept R/C Start/Stop	-	Stop Accept R/C Start/Stop	-	-	-	
7	Start <-> Stop Prohibit R/C Start/Stop	-	Start <-> Stop Accept R/C Start/Stop	-	Set thermostat OFF	Release thermostat OFF	Input 1, 2: pulse Input 3: static
8	-	-	-	-	-	-	-
9	Heat	-	Cool	-	Fan	-	All input: pulse
10	Heat Start	Indoor units stop when all of Input 1, 2, 3 are open	Cool Start	Indoor units stop when all of Input 1, 2, 3 are open	Fan Start	Indoor units stop when all of Input 1, 2, 3 are open	All input: static
11	-	-	-	-	-	-	-
12	-	-	-	-	-	-	-
13	-	-	-	-	-	-	-
14	-	-	-	-	-	-	-
15	Start	Stop	-	-	Set thermostat OFF	Release thermostat OFF	All input: static

※ R/C: Remote Controller

※1: When inputting pulses, set the pulse width to 200 ms.

- Wiring specifications

  Type: vinyl insulated cord with sheath
  Thickness: 0.5 to 2.0 mm^2
  Length: 100 m maximum

※2 Digital output

- D01 for start output signal.
  D02 for alarm output signal.
- Maximum allowable contact voltage and current are AC 240 V and 3 A maximum or DC24 V and 3 A maximum.
- Wiring specifications are for digital input.

13. Seri-para I/O Unit for each indoor unit (CZ-CAPBC2)

※3 Analog input

●Select the temperature setting control method from the following 3 types.
- Input voltage ① (equally divided upper and lower setting temperature limits)
- Input voltage ② (fixed voltage)
- Input resistance

●In case of Input voltage ①,②
- Set the Set temperature input switch S4 to "0 to 10 V" (factory default)
- Wiring specifications
  Type: vinyl insulated cord with sheath (shield line recommended)
  Thickness: 1.25 to 2.00 mm^2
  Length: 70 m maximum

●Input voltage ① (equally divided upper and lower setting temperature limits) (factory default)
- Performed in the input range of 0 to 10 V DC (lower setting temperature limit to upper setting temperature limit).
- Relationship between setting temperature and voltage is as the diagram below.
- Upper and lower temperature setting limits may vary according to the indoor units and operation mode.
  Refer to the relationship between setting temperature and voltage, described in (example) 3-1 "Operation mode of a typical model [lower limit to upper limit]".

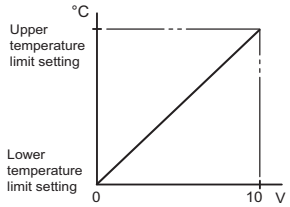

Relationship between input voltage and temperature

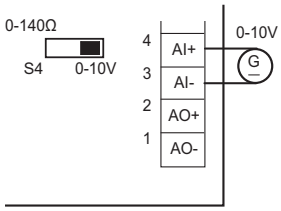

Line connection

●Input voltage ② (fixed voltage)
- Performed in the input range of 0 to 10 V DC.
- The effective range of the setting temperature is 2.2 V to 10 V (11 °C to 50 °C). Remote controller cannot be used for temperature in this range.
- When the input exceeds the upper or lower setting temperature limits, it is set to the upper or lower limits.
  For example, in case of air-conditioning (cool) [18 °C to 30 °C], if the voltage is below 3.5 V, the temperature is set to 18 °C, and if over 6.2 V, to 30 °C.
- To set the temperature using remote controller, set the input voltage below 1.9 V.

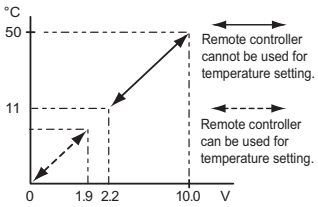

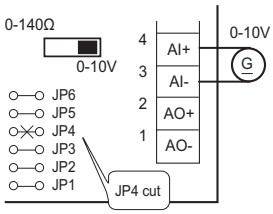

Mapping table of setting temperature and input voltage (input voltage ②)

Temperature setting [°C]	16	17	18	19	20	21	22	23	24	25	26	27	28	29	30
Input voltage [V]	3.2	3.4	3.6	3.8	4.0	4.2	4.4	4.6	4.8	5.0	5.2	5.4	5.6	5.8	6.0

Note:
Input voltage after an indoor unit has been connected. The maximum input voltage is 10 V. Over 10 V input voltage may cause malfunction.

● Input resistance
- Temperature setting (1 °C step) is performed in the range of 0 to 140 Ω.
- Relationship between setting temperature and resistance is as the diagram below.
- Upper and lower temperature setting may vary according to the indoor units and operation mode.
  Refer to the relationship between setting temperature and resistance, described in (example) 3-1 "Operation mode of a typical model [lower limit to upper limit]".
- Set the Set temperature input switch S4 to "0 to 140 Ω".
- Wiring specifications
  Type: vinyl insulated cord with sheath (shield line recommended)
  Thickness: 1.25 to 2.00 mm^2
  Length: 70 m maximum

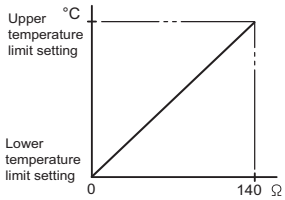

Relationship between connection resistance and temperature

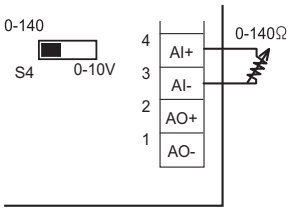

Line connection

3

13. Seri-para I/O Unit for each indoor unit (CZ-CAPBC2)

(example) 3-1: Operation mode of a typical model [lower limit to upper limit °C]

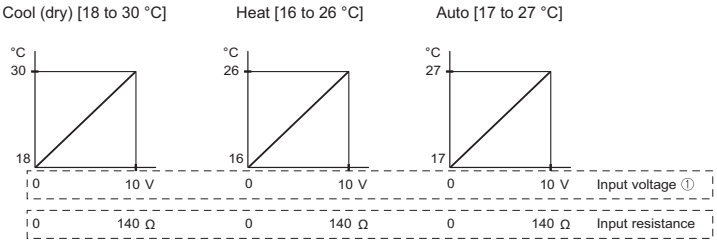

※4 Analog output

- The indoor temperature monitor output is from 4 to 20 mA DC (5 to 36°C), and the temperature can be set in steps of 0.5°C.
  Take care of the measurement units used by the central monitor. The wiring specifications are for analog input. Keep the load resistance below 240 Ω.

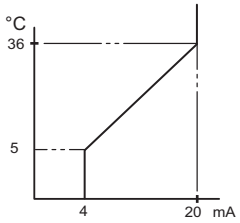

Relationship between current value and temperature

Settings switch

Control type setting switch S1

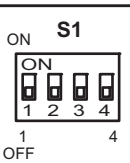

– : OFF ● : ON

Control type	S1 1	S1 2	S1 3	S1 4	Control type	S1 1	S1 2	S1 3	S1 4
0	–	–	–	–	8	–	–	–	●
1	●	–	–	–	9	●	–	–	●
2	–	●	–	–	10	–	●	–	●
3	●	●	–	–	11	●	●	–	●
4	–	–	●	–	12	–	–	●	●
5	●	–	●	–	13	●	–	●	●
6	–	●	●	–	14	–	●	●	●
7	●	●	●	–	15	●	●	●	●

Refer to digital input.

Detail setting switch S2

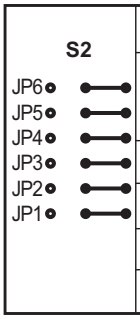

JP6	Connection	N/C (factory default)	
	Cut	N/C	
JP5	Connection	With Remote controller or centralized control system (factory default)	※4
	Cut	Without Remote controller or centralized control system	※4
JP4	Connection	Input voltage ① (factory default)	※3
	Cut	Input voltage ②	※3
JP3	Connection	Output control temperature as room temperature (factory default)	※2
	Cut	Output intake temperature as room temperature	※2
JP2	Connection	Set temperature push priority (factory default)	※1
	Cut	Prohibit Remote controller temperature setting	※1
JP1	Connection	N/C (factory default)	
	Cut	N/C	

※1: Switches the local remote control temperature setting operation between push priority and operation prohibited.

※2: Switches the room temperature monitor output between the temperature used by the controller (when heating, the intake temperature with shift, or the remote control sensor) and the intake temperature.

※3: **Cut (fixed voltage) JP4, although no change the setting temperature with Seri-Para I/O Unit. Do not input voltage to No.3 and 4 (AI±) of CN1 at the time.**

※4: When using the Seri-Para I/O Unit, it is standardized to connect a remote controller or a centralized control system (i.e. System controller). To use the Seri-Para I/O Unit by itself (without a remote controller or a centralized control system), cut JP5. In this regard, however, the operational functions (such as operation mode, fan speed and wind direction) will be limited with only the Seri-Para I/O Unit.

Voltage present / absent switch S3

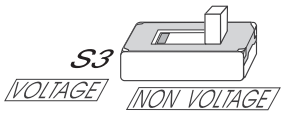

(factory default)

For digital input, switches between voltage present and voltage absent.

Set temperature input switch S4

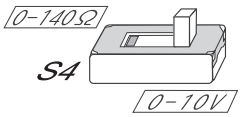

(factory default)

For analog input, switches between input voltage and input resistance.

13. Seri-para I/O Unit for each indoor unit (CZ-CAPBC2)

Boot Switch S5

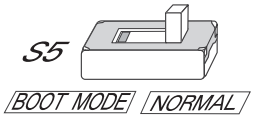

(factory default)

Always set the S5 switch to NORMAL.

LED (Green) display

LED (Green) display

LED display	Meaning	Action to take
Off	Power Off	Check the remote control line connection
Blinking at 3 s intervals	12V (T10 terminal) power supply error	Check the power supply line connection Make sure that the fuse of the T10 cable (accessory components 1) does not meltdown.
On/off out at 1 s intervals	Indoor unit alarm	Clear the indoor unit alarm
On/off out at 100 ms intervals	Initializing communications, communications error	Check the remote control line connection
On ※1	Normal operation	-

※1: When transmitting setting data to an indoor unit, the LED will be turned off for 200 ms.

Product specifications

Power	DC12V
Power consumption	1.2W, 0.1A
Operating environment conditions	Temperature: -10 to 50°C; Humidity: 20 to 80%; for indoor use only
External dimensions	256.0 mm (w) x 136.0 mm (d) x 63.8 mm (h)
Weight	0.9 kg

External dimensions

unit: mm

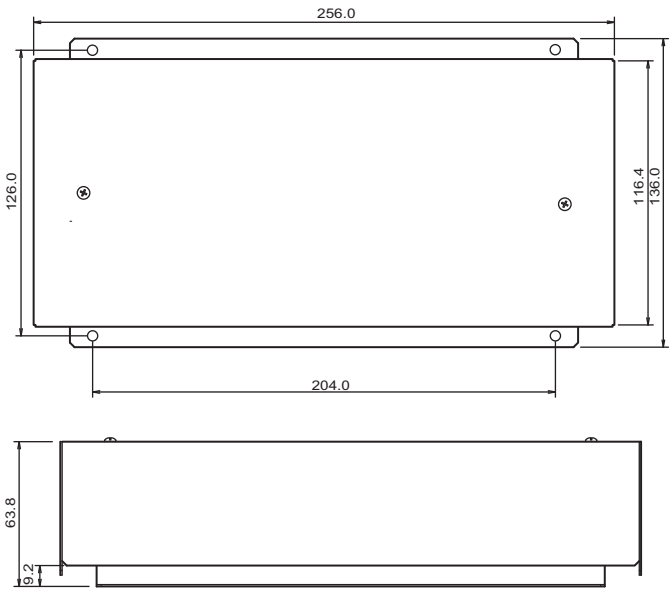

14. Interface Adaptor (CZ-CAPC2)

Safety Precautions

- Read these Safety Precautions before beginning installation or electrical work, and perform the work only in the correct manner.
- Precautions in this manual are given in the form of "Warnings" or "Cautions." Both types of precautions contain important information related to your safety, the safety of users, and the correct operation, installation or maintenance of the air conditioning system. Be sure to carefully observe all relevant precautions.

WARNING	This symbol refers to a hazard or unsafe practice which can result in severe personal injury or death.
CAUTION	This symbol refers to a hazard or unsafe practice which can result in personal injury or product or property damage.

When installation work is completed, perform a test run and check that no trouble occurs. Also be sure to explain the methods for using the product to the customer, based on the contents of the Operation Manual. In addition, request that the customer keep and conveniently store the "Information for the Person in Charge of Installation (Electrical) Work and Servicing " together with the Operation Manual.

WARNING

- Request installation and electrical work only from the dealer or a qualified air conditioning specialist. Attempting to carry out installation work on your own, and doing so incorrectly, may result in electrical shock, fire, or other hazards.
- Installation procedures must be performed correctly, carefully following the instructions in this document.
  Failure to do so may result in electrical shock, fire, or other hazards.
- Electrical work must be performed by a qualified electrician. It must be performed in accordance with technical standards related to electrical equipment, interior wiring regulations, local codes, and the contents of these instructions.
  Insufficient power circuit capacity or improper electrical work may result in electrical shock or fire.
- Use only the designated cables for wiring, and connect them securely. Fasten cables so that no external force is applied to the terminal connections.
  Insufficient connections or cable fastening may result in heat generation, fire, or other hazards.
- The installation location requires the use of a circuit breaker. Failure to use a circuit breaker may result in electric shock or fire.
- Circuit breaker must be incorporated in the fixed wiring in accordance with the wiring regulations. The circuit breaker must be an approved 10-16 A, having a contact separation in all poles.

CAUTION

- Do not install in kitchens, workshops, or other locations where there is oil mist in the air.
- Do not install next to windows or in other locations exposed to direct sunlight or in direct contact with outside air.
- Do not install near an elevator, automatic door, industrial sewing machine, or other devices that can be expected to produce electrical noise.
- To prevent possible hazards from insulation failure, the unit must be grounded.

Accessories for Interface Adaptor

No.	Supplied parts	Qty.
①	Fastening screws, Tapping screws 4 x 8	4
②	Binding strap	2
③	Terminals (M3)	11

Installing the Interface Adaptor

<Note 1> Avoid twisting the inter-unit control wiring or the input/output wiring together with power or other wiring, and avoid running them in the same metal conduit. Doing so can cause malfunction.

<Note 2> Install the interface adaptor at a location away from any sources of electrical noise.

<Note 3> Install a noise filter or take other appropriate action if electrical noise affects the power supply circuit of the unit.

14. Interface Adaptor (CZ-CAPC2)

Wiring up the Interface Adaptor

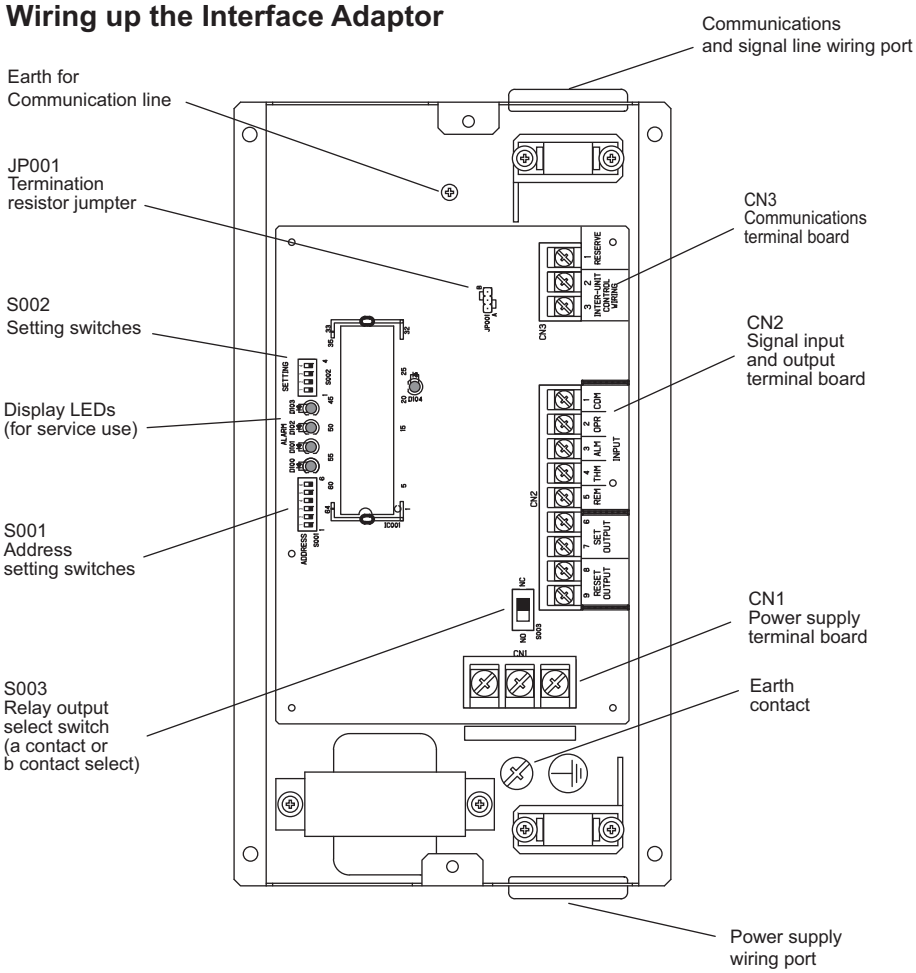

(1) Connecting the power supply

This interface adaptor can use either 110-120 V AC or 220-240 V AC power supply.

Use terminals 2 and 3 for 110-120 V AC, or terminals 1 and 3 for 220-240 V AC.

※ Be sure of the power supply voltage before connecting the power supply terminals. Connecting the wrong power supply voltage could result in fire or other damage.

※ Connect the power supply wires securely to the power supply terminals, using M4.5 round connectors with insulator holddown.

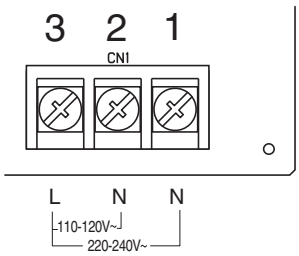

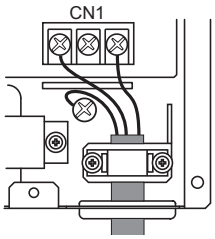

Wiring sample for 220-240 V AC

3

14. Interface Adaptor (CZ-CAPC2)

(2) Connecting to the central control unit

Connect the interface adaptor inter-unit control wiring (CN3, (2) and (3)) to the central control unit inter-unit control wiring, as shown in the diagram below. Use the shielded wiring.

- These signal lines do not have polarity; either signal line may be connected to terminals (2) and (3).
- These terminals may also be connected to the inter-unit control wiring of other indoor or outdoor units.
- Ground the communication wiring.

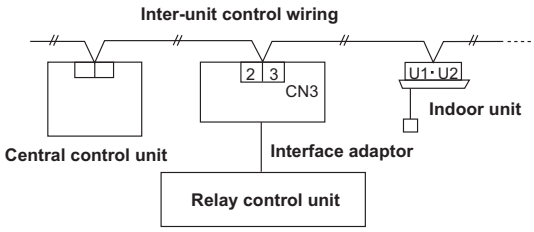

Securing the wiring

Make sure to secure all wiring using the clip wires inside the unit, and the cable clamps outside the unit.

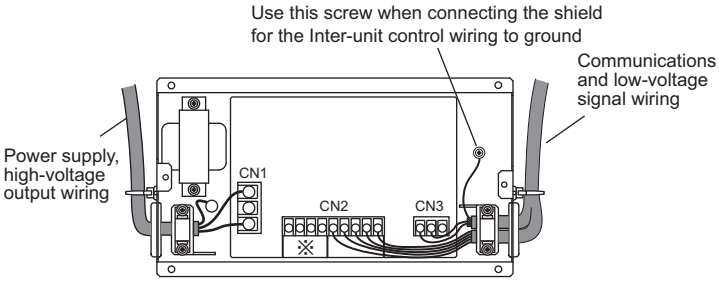

※ If the SET / RESET output uses high voltage signaling (110 - 240 V AC), pull that signal line out through the power supply wiring port. Bundling the high voltage signal line with the communications lines or low-voltage signal lines, or allowing it to touch them, may result in malfunction.

Circuit example for high-voltage set output

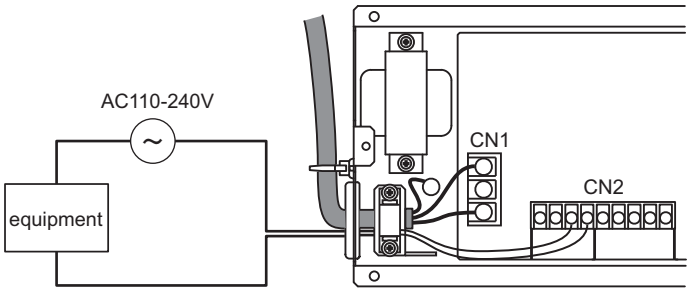

Termination Plug (JP001)

If the system is comprised of a single interface adaptor, and there are no air conditioner units connected directly to the inter-unit control wiring, then a jumper must be installed on the B side of the termination plug (JP001) of the single interface adaptor.

Jumper on the A side of JP001: termination resistor not connected (factory default setting)
Jumper on the B side of JP001: termination resistor connected

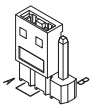

no termination resistor

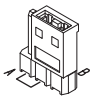

termination resistor connected

14. Interface Adaptor (CZ-CAPC2)

How to Set the Adaptor Address

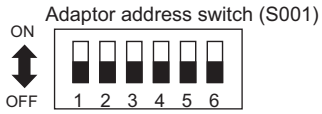

The adaptor address corresponds to the indoor unit number.
If multiple interface adaptors are used, make sure each adaptor has a unique address.

(1) Setting the central control address from the central control unit
(Setting switch S002-3 OFF)

This mode is useful for systems with both interface adaptors and indoor units which are connected directly to inter-unit control wiring, and when the central control unit sets or changes central control addresses.

Set the interface adaptor addresses, beginning with address 1.
※Interface adaptors are registered as system address 31.

Example: When the interface adaptor address is set to 1, then the interface adaptor unit number becomes 31-1.
In this case, the central control unit is free to set the interface adaptor's central control address.

(2) Setting the central control address using the interface adaptor address switches
(Setting switch S002-3 ON)

The inerface adaptor address becomes the central control address.
Set the interface adaptor address as desired.
※ Interface adaptors are registered as system address 31, and the adaptor address and central control address will be the same.

Example: If the interface adaptor address is set to 5, then the interface adaptor unit number becomes 31-5, and its central control address becomes 5.

※ The central control address is fixed by the adaptor address switches.
(The central control address may not be changed by the central control unit.)

Set the address so that it does not match that of any indoor unit central control address.

Channel	adaptor address switch number 1 2 3 4 5 6	Channel	adaptor address switch number 1 2 3 4 5 6	Channel	adaptor address switch number 1 2 3 4 5 6	Channel	adaptor address switch number 1 2 3 4 5 6
1	―――――	17	――――●―	33	―――――●	49	――――●●
2	●―――――	18	●――――●―	34	●――――●	50	●――――●●
3	―●―――	19	―●――●―	35	―●―――●	51	―●――●●
4	●●―――	20	●●――●―	36	●●―――●	52	●●――●●
5	――●―――	21	――●―●―	37	――●――●	53	――●―●●
6	●―●―――	22	●―●―●―	38	●―●――●	54	●―●―●●
7	―●●―――	23	―●●―●―	39	―●●――●	55	―●●―●●
8	●●●―――	24	●●●―●―	40	●●●――●	56	●●●―●●
9	―――●――	25	―――●●―	41	―――●―●	57	―――●●●
10	●――●――	26	●――●●―	42	●――●―●	58	●――●●●
11	―●―●――	27	―●―●●―	43	―●―●―●	59	―●―●●●
12	●●―●――	28	●●―●●―	44	●●―●―●	60	●●―●●●
13	――●●――	29	――●●●―	45	――●●―●	61	――●●●●
14	●―●●――	30	●―●●●―	46	●―●●―●	62	●―●●●●
15	―●●●――	31	―●●●●―	47	―●●●―●	63	―●●●●●
16	●●●●――	32	●●●●●―	48	●●●●―●	64	●●●●●●

● : ON　― : OFF

Setting Switches

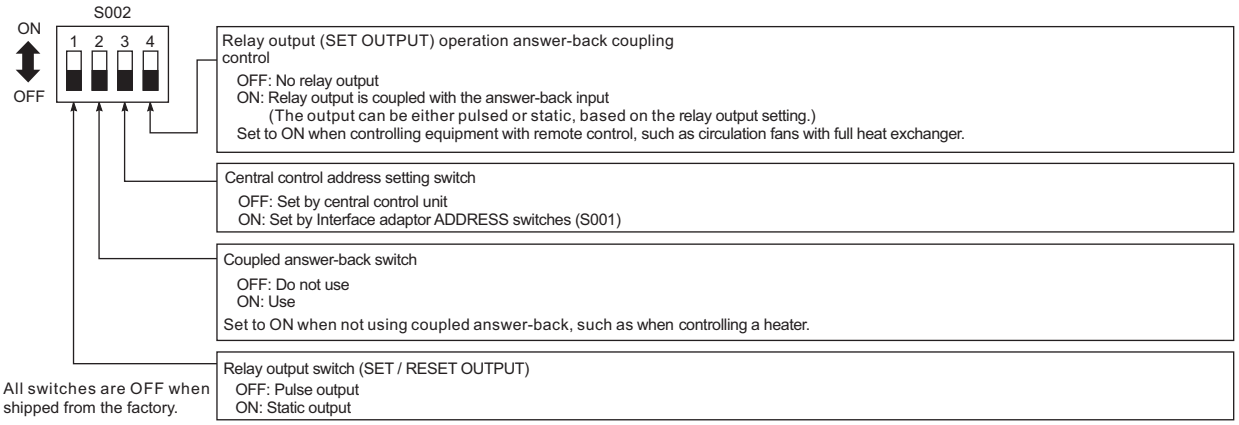

3

14. Interface Adaptor (CZ-CAPC2)

Connection as a Relay Control Unit

The interface adaptor output terminal and input terminal specifications are given below.
Use the signals most appropriate for the type of equipment being controlled.

(1) Output terminals

The interface adaptor provides four styles of ON (set relay) and OFF (reset relay) output signals for use by the equipment being controlled.
Select the style appropriate for your application. For more information, see the "Relay Circuit Examples" section.

Output style	Contact outputs (relay contact)	Setting method
Pulse contact output ON (set) output: a contact OFF (reset) output: a contact	※1 ON OFF	・S002-1: OFF ・S002-4: OFF ・S003: NO
Pulse contact output ON (set) output: a contact OFF (reset) output: b contact	※1 ON OFF	・S002-1: OFF ・S002-4: OFF ・S003: NC
Pulse contact output ON (set) output: a contact Both start and stop signals are sourced in turn from the ON (set) relay	※1 ON OFF	・S002-1: OFF ・S002-2: OFF ・S002-4: ON ・Only the ON contact output is used. ・The OFF contact output becomes a local prohibit signal (see ※2)
Static contact output (continuous contact)	OFF ON OFF	・S002-1: ON ・Only the ON contact output is used. ・The OFF contact output becomes a local prohibit signal (see ※2)

※1 The pulse width is approximately 0.5 seconds.
※2 The output changes according to a signal from the Central control unit.
Use this signal as needed.
Individual permission: OFF (continuous contact)
Local prohibit: ON (continuous contact)

< Contact capacity >

Output	Contact capacity (resistive load)
ON (set) relay output (CN1, terminals 6 and 7)	250 V AC, 10 A (inductive load: 5 A) Minimum usable load: 5 V, 100 mA
OFF (reset) relay output (CN1, terminals 8 and 9)	250 V AC, 3 A Minimum usable load: 5 V, 100 mA

Caution:
Note that the ON (set) relay output and OFF (reset) relay output have different contact capacities.

(2) Input terminals

・Status monitor signals from the equipment being controlled are received by the relay contacts.
・The local start/stop input uses a pulse style, so connect it to a momentary input device, such as a push switch.

Input	Terminal numbers	Input style	Usage
Operation answer-back input	1, 2	No-voltage a contact (static)	Monitor the operation (start/stop condition)
Alarm signal input	1, 3	No-voltage a contact (static)	Monitor general alarms
Thermo ON signal input	1, 4	No-voltage a contact (static)	Monitor the load when the thermo is ON, and report to the central control unit
Local start/stop input	1, 5	No-voltage a contact (pulse)	Equipment ON/OFF from interface adaptor

Circuit contact voltage and current: 12 V DC, 10 mA

Caution:
When local prohibit (central) is set by the central control unit, the local start/stop input will be ignored.
When stopped, the alarm input will be ignored.

14. Interface Adaptor (CZ-CAPC2)

Relay Circuit Examples

Style	Installed equipment (areas within the dashed lines are the interface adaptor)	Notes
Pulse contact output (no-voltage contact) (ON output a contact + OFF output a contact)	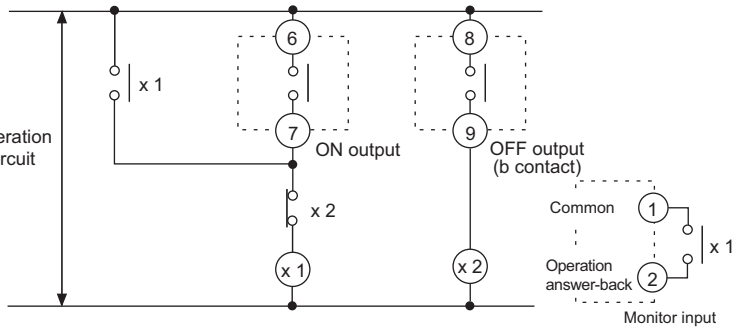	1) X1, X2 are auxiliary devices 2) The interface adaptor OFF output uses the a contact (S003 set to NO) 3) Switch S002-1 is OFF, switch S002-4 is OFF
Pulse contact output (no-voltage contact) (ON output a contact + OFF output b contact)	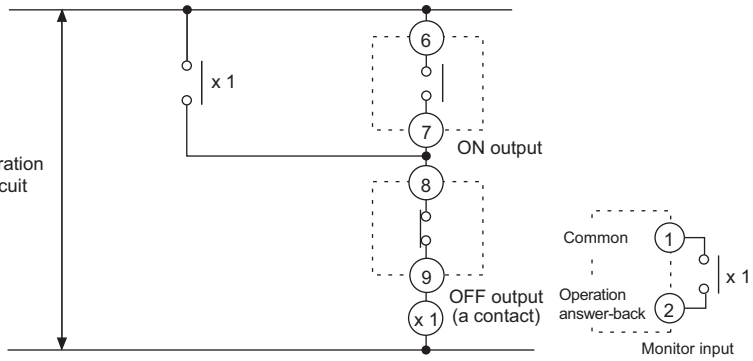	1) X1 is an auxiliary device 2) The interface adaptor OFF output uses the b contact (S003 set to NC) 3) Switch S002-1 is OFF, switch S002-4 is OFF
Continuous contact output (no-voltage contact) (ON output a contact)	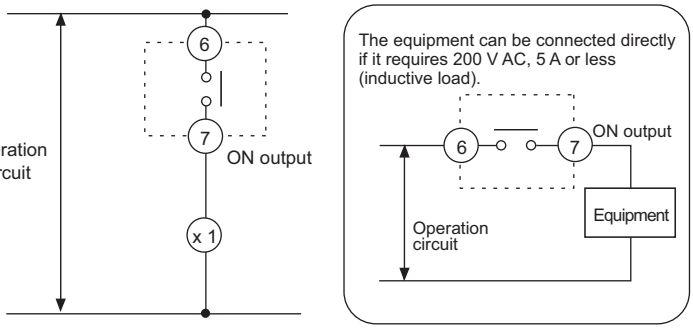	1) X1 is an auxiliary devices 2) Switch S002-1 is ON 3) The equipment can be controlled directly (power supply directly shut off) by the ON output if it requires 250 V AC, 5 A or less (inductive load) 4) The output will be OFF during a commercial power outage 5) The OFF output may be used for individual / central selection (will be ON when the central control unit is set to "central", off when the central control unit is set to "individual").
Input (no-voltage a contact)	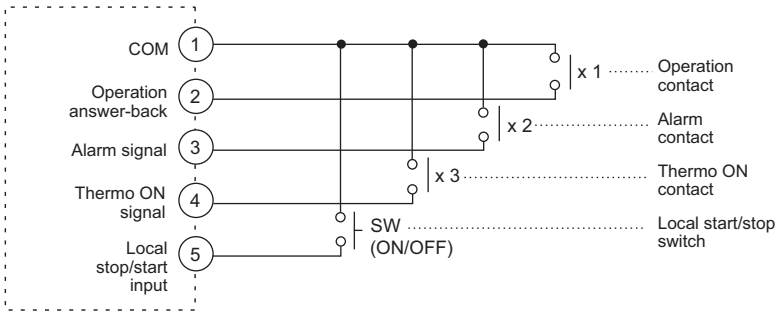	1) X1, X2, X3 are auxiliary devices; SW is a push switch. 2) If operation answer-back from the equipment is not used, switch S002-2 is ON. In this case, the internal answer-back will be OFF during a commercial power outage. 3) If the answer-back input is unused, it should not be connected. (Only connect inputs that are used.)
Connecting to a circulation fan with a full heat exchanger	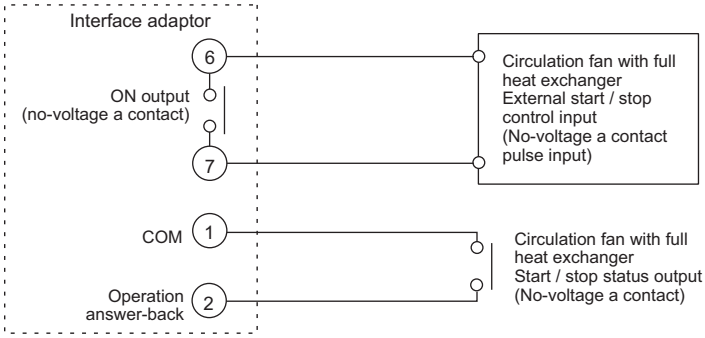	1) Switch S002-1 is OFF, switch S002-2 is OFF, switch S002-4 is ON 2) The circulation fan with full heat exchanger's external start/stop control input uses no-voltage a contact pulse, and its start/stop condition output uses no-voltage a contact. **Caution:** If the Central control unit or circulation fan with full heat exchanger remote control repeatedly and continuously initiates start/stop operations, the circulation fan with full heat exchanger may not be able to recognize the settings.

3

14. Interface Adaptor (CZ-CAPC2)

Alarm Display

Alarm			Service display lamps			
Item	Meaning	Action	D100	D101	D102	D103
Alarm from connected equipment	An alarm signal was received by the interface adaptor from a connected piece of equipment during operation.	Investigate the reason for the alarm from the connected equipment, and remove the cause of the alarm.	※	●	●	●
System stop	The system is stopped.	Not an alarm	※	※	※	※

※: blink ●: Off

Of the items listed above, only the alarm from connected equipment is passed to an upstream central control unit, which will display "C12". If the central control unit does not have an LCD display, then its warning LED will blink.

Specifications

Power source	110 -120V / 220-240 V ～ 50 / 60Hz , single-phase
Power consumption	4.9 W
Operating environment	0-40℃, 20-80% humidity, indoor only
External dimensions	50 mm (h) x 235 mm (w) x 96.5 mm (d)
Weight	Approx. 1.3 kg

3

External dimensions

Unit: mm

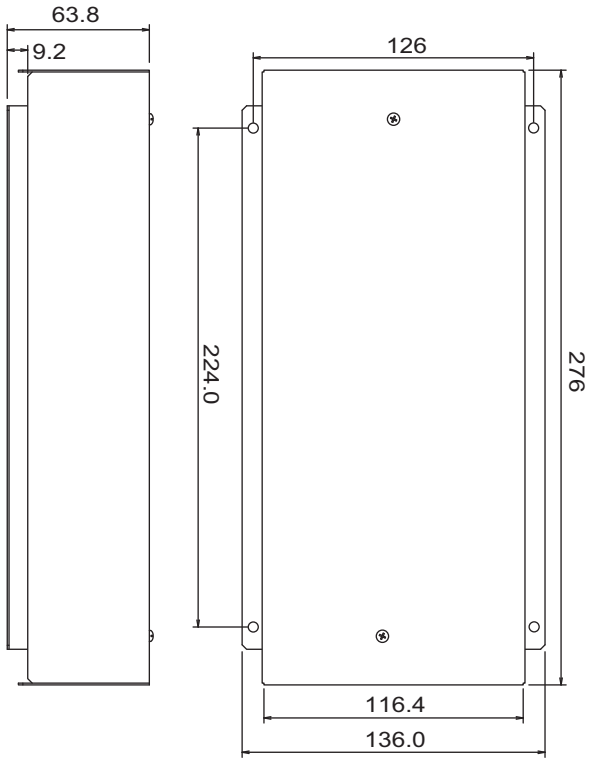

Operation Manual

Centralized Control System

CZ-CWEBC2

Web Interface

Thank you for choosing the CZ-CWEBC2 Web Interface.
Before using the system, be sure to read this manual carefully. In particular, be sure to read the “Important Safety Instructions”.
After reading this manual, store it in a convenient place.

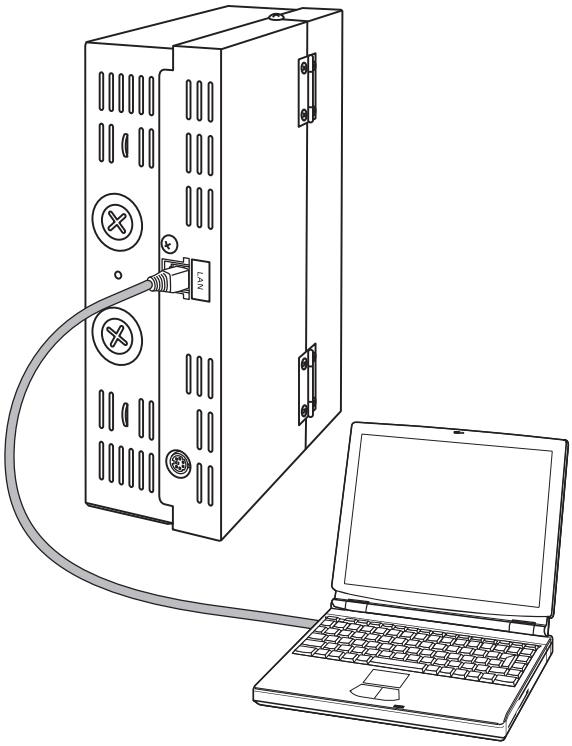

Contents

1. Important Safety Instructions 3
2. Features of the System 7
3. System Configuration 8
4. Names and Functions of Parts..... 9
5. Preparations and Login 12
6. Status/Control 14
7. Maintenance..... 21
8. Initial Settings 24
9. Auxiliary Settings 35
10. Supplementary Information 45
11. Troubleshooting..... 48
12. Care..... 50
13. Specifications..... 51

Centralized Control System

CZ-CWEBC2

Web Interface

Operation Manual

Contents

1 Important Safety Instructions **3**
2 Features of the System **7**
3 System Configuration **8**
4 Names and Functions of Parts **9**
5 Preparations and Login **12**
5.1 Turning the Web Interface On 12
5.2 Checking the PC 12
5.3 Log-in 12
6 Status/Control **14**
6.1 Displaying general information by tenant ..... 14 — Main 1 Sub 1
6.2 Displaying detailed information by tenant ..... 19 — Main 1 Sub 2
6.3 All Units ..... 20 — Main 1 Sub 3
7 Maintenance **21**
7.1 Alarm Log ..... 21 — Main 2 Sub 1
7.2 Sent Mail Log ..... 22 — Main 2 Sub 2
8 Initial Settings **24**
8.1 Date and Time Setting ..... 24 — Main 3 Sub 1
8.2 Unit/Tenant ..... 26 — Main 3 Sub 2
8.3 WEB Settings ..... 28 — Main 3 Sub 3
8.4 User Settings ..... 30 — Main 3 Sub 4
9 Auxiliary Settings **35**
9.1 Program Timer ..... 35 — Main 4 Sub 1
9.2 Tenant holiday/Timer special day ..... 37 — Main 4 Sub 2
9.3 Prohibiting remote control use ..... 39 — Main 4 Sub 3
9.4 Other settings ..... 41 — Main 4 Sub 4
10 Supplementary Information **45**
11 Troubleshooting **48**
12 Care **50**
13 Specifications **51**

[Note]
The screen display examples in this manual are for explanation use and may be different from the displays of air conditioners actually used.
The screen displays may also vary, depending on the operating system of your PC and the Web browser you use.

1 Important Safety Instructions

Before using the system, be sure to read these "Important Safety Instructions".

The precautions given in this manual consist of specific "⚠ Warnings" and "⚠ Cautions". They provide important safety related information and are important for your safety, the safety of others, and trouble-free operation of the system. Be sure to strictly observe all safety procedures.

- The labels and their meanings are as described below.

⚠ **Warning**	This refers to a hazard or unsafe procedure or practice which can result in severe personal injury or death.
⚠ **Caution**	This refers to a hazard or unsafe procedure or practice which can result in personal injury or product or property damage.

- Meaning of symbols

⚠	Indicates "Warning" or "Caution".
⃠	Indicates "Prohibited".
❗	Indicates an action that should always be performed.

- After reading this manual, save it in a convenient place.
  Be sure to provide this manual to any person who may use the product.

Installation Precautions

⚠ **Warning**	
Do not install by yourself. ❗ Installation should always be performed by your dealer or a professional service provider. Electric shock or fire may result if an inexperienced person performs any installation or wiring procedures incorrectly.	Use only specified air conditioners. ❗ Always use only air conditioners specified by dealer. Installation should always be performed by a professional service provider. Electric shock or fire may result if an inexperienced person performs any installation or wiring procedures incorrectly.
Electrical work must be carried out by qualified personnel. ❗ Contact your dealer for installation. Do not attempt to install the product by yourself.	Avoid installation in the following locations: ❗ Locations subject to inflammable gas leakage

15. Web Interface (CZ-CWEBC2)

1 Important Safety Instructions

⚠ Caution	
Do not install in damp locations or locations subject to vibrations. Damage to the system can result.	Do not install under direct sunlight or in places near heat sources. Damage to the system can result.
Do not install near sources of noise. Malfunctions can result. Elevators, automatic doors, industrial machinery, etc.	Avoid static electricity during cabling work. Before starting cabling work, touch ground to discharge static electricity from the body.
Avoid installation in the following locations: • Near beaches or other places with a large amount of salt • Hot springs or other locations subject to sulfuric gas • Locations subject to water and oil (including industrial lubricants) sprays and high humidity • Locations with large changes in voltage • Near machines generating electromagnetic waves • Locations close to organic solvents	Keep televisions, radios, PCs, etc, at least 1 m away from the Centralized Control System, indoor units, and remote controllers. Picture breakup and noise can occur.
Do not use heaters near the Centralized Control System. The Centralized Control System may malfunction because the temperature becomes outside the range of the operating temperature for the system.	Use remote controllers or system controllers together. Should the Centralized Control System fail, operation of air conditioners is disabled with the Centralized Control System. Be sure to use the remote controllers or system controllers together.

3

1 Important Safety Instructions

Precautions for Use

⚠ Warning

Do not touch switches with wet hands.

Prohibited

Electric shock and damage to the system can result.

Protect the Web Interface from water.

Prohibited

Damage to the system can result.

Stop the system and turn the power off if you sense unusual smells or other irregularities.

Turn off the power.

Continuing operation when the system is out of order can result in electric shock, fire, and damage to the system. Contact your dealer.

3

⚠ Caution

Do not drop the system or subject it to strong shocks.

Prohibited

Damage to the system can result.

Use only fuses with the correct capacity.

Prohibited

Use of pins or copper wire can result in fire and damage to the system.

Use only the specified power source.

Use of any other power source can result in fire and damage to the system. Use single-phase 100-240 V AC power.

1 Important Safety Instructions

Moving and Repair Precautions

⚠ Warning	
Do not disassemble or repair. Prohibited Never disassemble or repair the system by yourself. Contact your dealer for repair. Electric shock or fire may result if an inexperienced person attempts to repair the system.	**Contact your dealer before moving the system.** Contact your dealer Contact your dealer or a professional service provider about moving and reinstalling the system. Electric shock or fire may result if an inexperienced person performs any installation procedures incorrectly.

2 Features of the System

The Web Interface (CZ-CWEBC2) is a centralized air conditioning management system dedicated to PAC and GHP for small-sized buildings.
Operations and status monitoring of air conditioners can be performed by a customer's PC after logging into the Web Interface.

- Number of connectable units..... • Up to 64 indoor units can be connected to one Web Interface.
  • Up to 30 outdoor units can be connected.
- Display ..... • No display unit is provided with this product. Operations are performed from and indications are displayed on a customer's PC after login.
- Operation functions ..... • Start and stop, temperature settings, operation mode selection, fan speed settings, fan direction settings, prohibition of use of remote controllers, ventilation, and resetting of filter cleaning sign
- Operation monitoring ..... • Monitoring of operation status (operating/stopped, operation mode, etc.) and alarms
  • Monitoring of filter cleaning signs
  • Display of alarm logs
- Program timers ..... • Up to 50 types of weekly timers can be programmed by combining 50 types of daily timers (50 times per day).
  • Programs for a tenant holiday and five types of timer special days can be set.
- Supported languages ..... • The following languages are supported, and you can select a language when logging in by entering a language code:
  English
  French
  German
  Italian
  Portuguese
  Spanish

3

Terms and abbreviations used in this manual and in the system software

Full term	Abbreviation
Outdoor unit system address	Outdoor unit system, Outdoor unit, Outdoor system, Outdoor, O/D
Indoor unit address	Indoor unit, Indoor, I/D
Tenant number	Tenant No., Tenant
Unit name	Unit
Central control address	Central address, CNTR

3 System Configuration

System Configuration Example

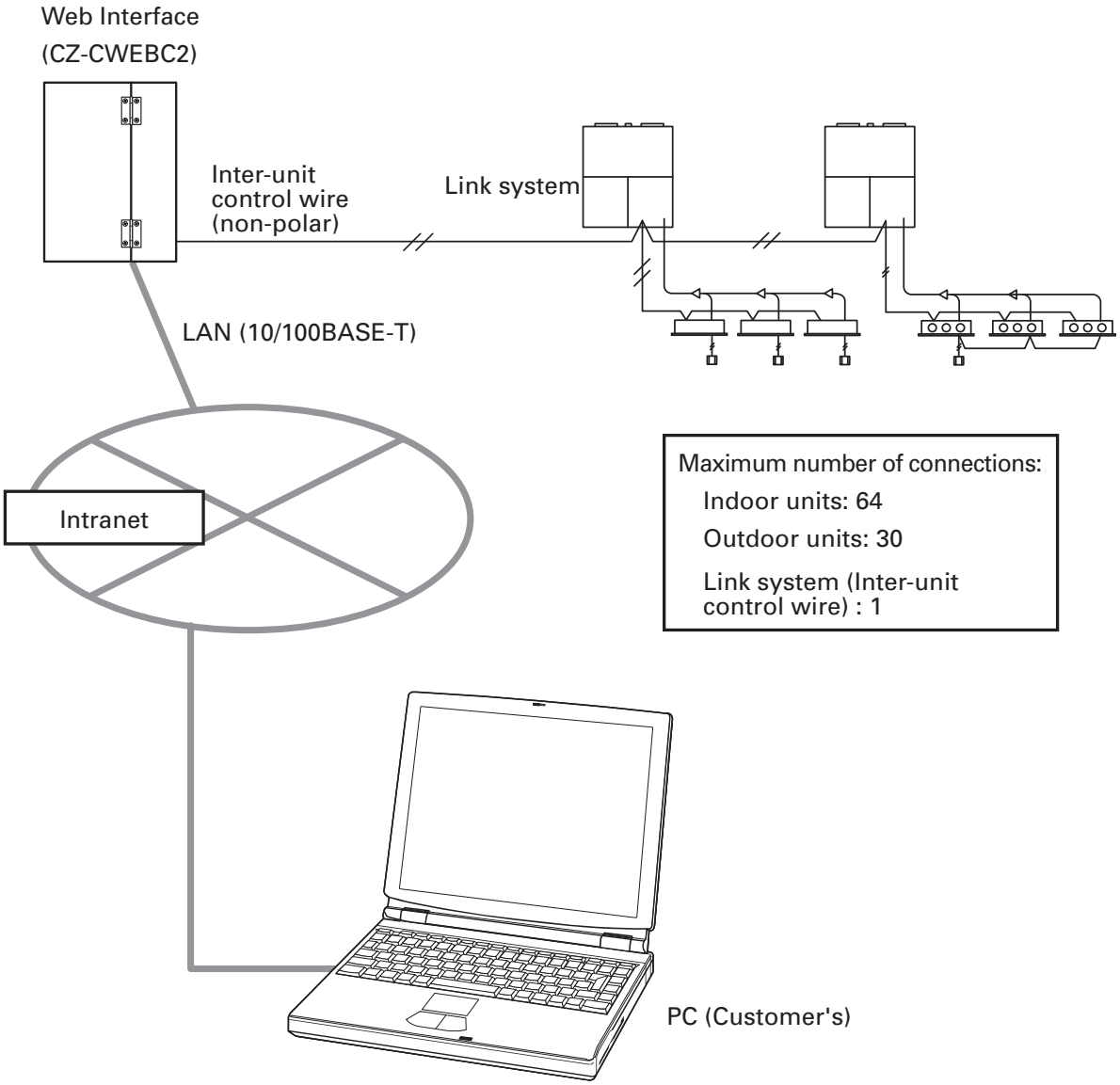

4 Names and Functions of Parts

• Exterior

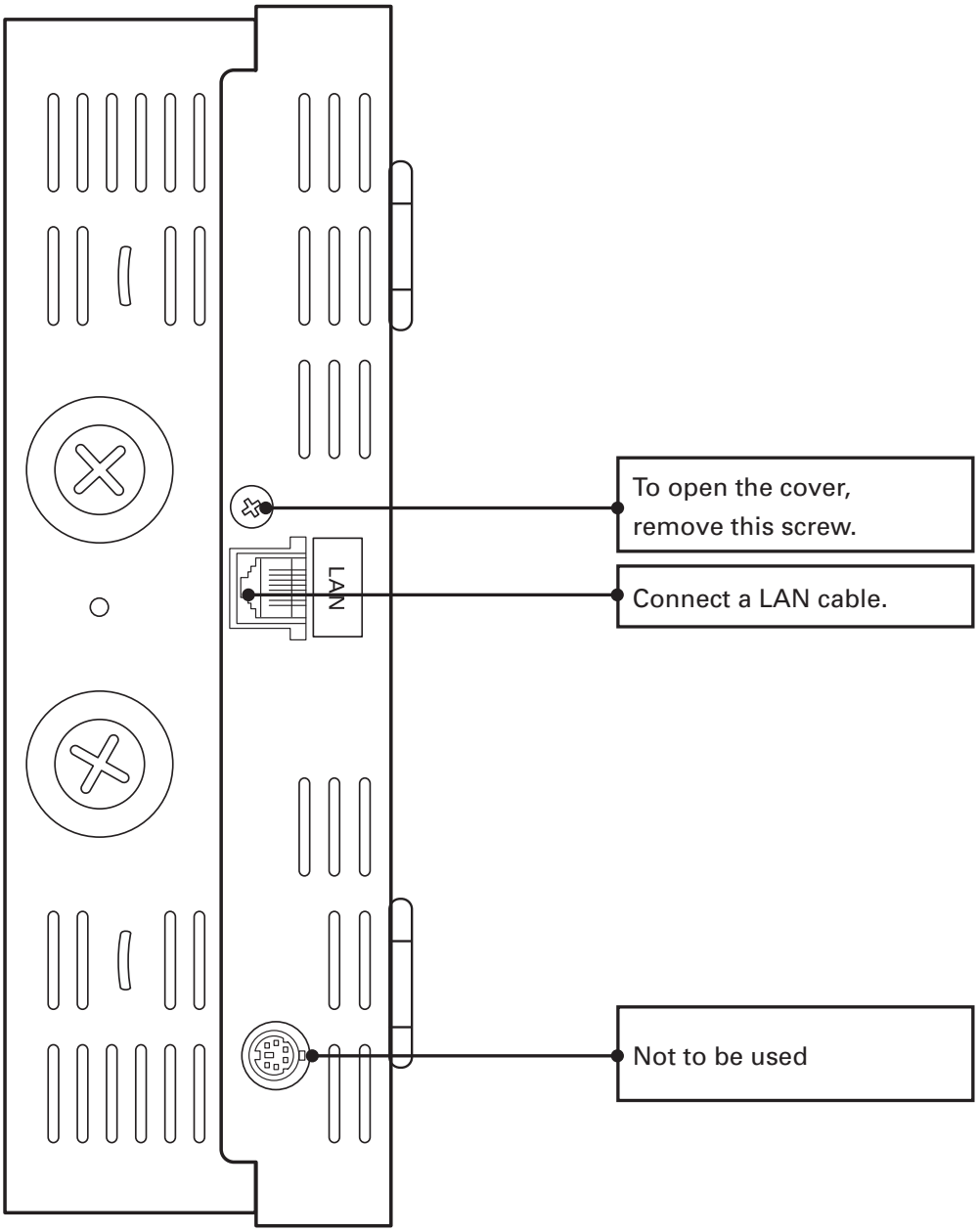

4 Names and Functions of Parts

• Under the cover

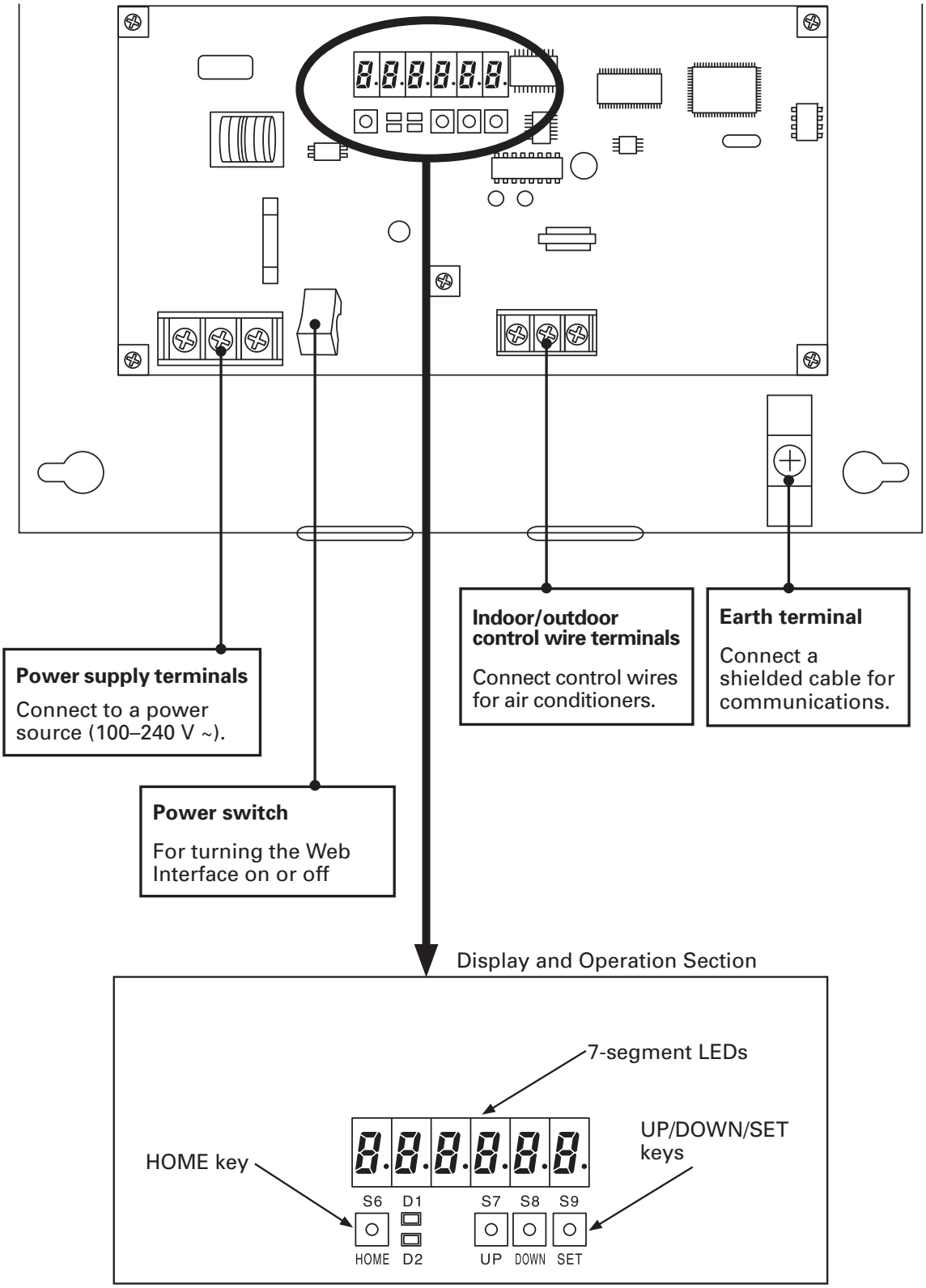

4 Names and Functions of Parts

[Notes on Connecting a LAN cable]

- Use a LAN cable of Category 5* or higher standards.
- Take security measures, such as installing a firewall, in order to protect this system against external unauthorized access.
- For details on connections and settings, consult the network administrator of the field site.

*Category 5

The standards for telecommunications cabling systems defined by the Telecommunications Industry Association (TIA) and the Electronic Industries Alliance (EIA). Up to 100 MHz frequencies can be used for telecommunications.
Straight and cross cables can be used. Straight cables are used for connections between a PC and a hub, and the Web Interface and the hub. Cross cables are used for directly connecting the Web Interface and a PC.

5 Preparations and Login

5.1 Turning the Web Interface On

After checking the connection with the air conditioners and making sure that **all the air conditioners are ON**, set the Power switch of the Web Interface to ON.

5.2 Checking the PC

The following environment is required for a customer's PC to access the Web Interface for operations of air conditioners:
(The system may not function properly in an environment other than that mentioned below.)

(1) Browser : Microsoft Internet Explorer 6.0
(2) Java applet : Sun Microsystems Java Plugin Ver1.4.2
 * Free downloading is possible from
 http://www.java.com/ja/download/manual.jsp.
(3) Communications protocol : IPV4 (IPV6 not supported)
(4) Display resolutions : XGA (1024 × 768 dots) or higher recommended

5.3 Log-in

Enter the following in the address bar of the Web browser on the PC:

http://[① or ②]/sacwww/index_[③].asp

① IP address : IP address that has been set for the Web Interface unit
The factory default settings are “192.168.1.1” and the DHCP “Invalid”.
② ID name : “Device Name” that has been set for the Web Interface unit
The ID name is required when the DHCP server is to be used.
③ Language code (Enter with one-byte characters.)

English: en	French: fr	German: de
Italian: it	Portuguese: pt	Spanish: es

[Example]
In a case where the IP address of the Web Interface is “10.31.139.212” and you are accessing English pages

http://10.31.139.212/sacwww/index_en.asp

In a case where a DHCP server is used and the ID name (device name) of the Web Interface is “WindowsCE0”

http://WindowsCE0/sacwww/index_en.asp

5 Preparations and Login

If the network works properly, the following login screen is displayed:

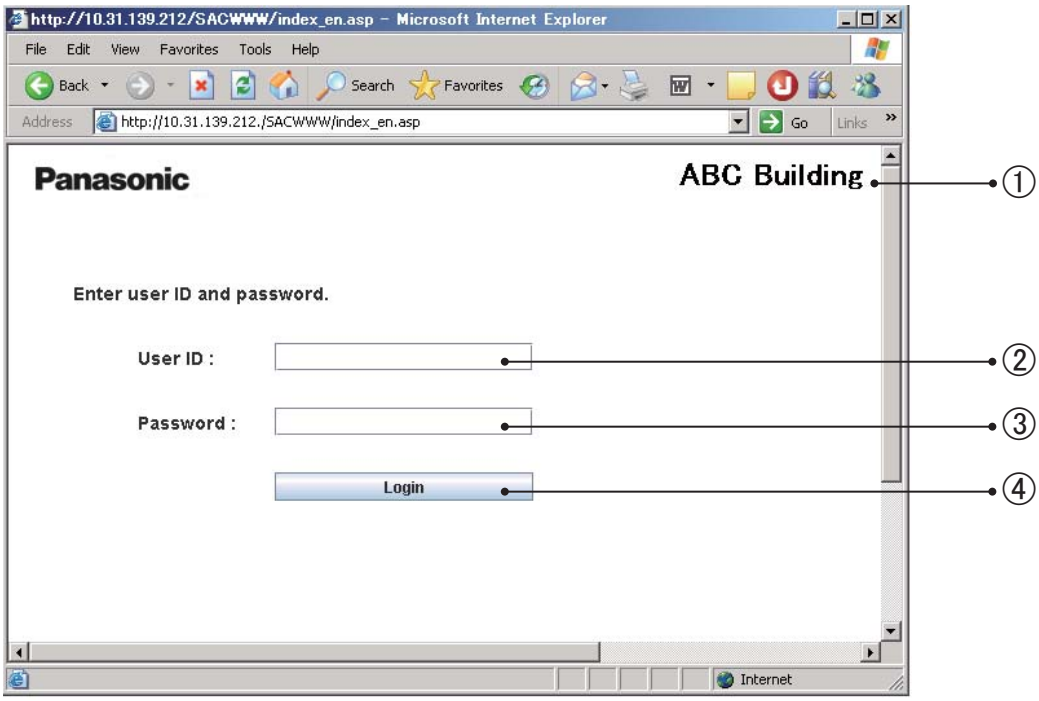

Log in using the user ID and password that have been set for the Web Interface.

① The "Site name" that has been set for the Web Interface is displayed.
② Enter the "User ID" that has been set for the Web Interface.
③ Enter the "Password" that has been set for the Web Interface.
④ Click on this button to log in.

If a wrong user ID or password is entered, the following message will be displayed:

After login is executed properly, the "Each tenant" screen (next page) will be displayed.

> At the factory, the Administrator user shown below is registered. After logging in using this administrator user account, change the password:*
> User ID : administrator
> Password : admin
> *For details on how to change the password, see "8.4 User Settings".

6 Status/Control

Main 1 Sub 1

6.1 Displaying general information by tenant

When you log in the Web Interface, or when "1. Status/Control: 1. Each tenant" is selected from the menu, the screen shown below is displayed.
(The details of the displayed screen vary, depending on the type of account used for login.)

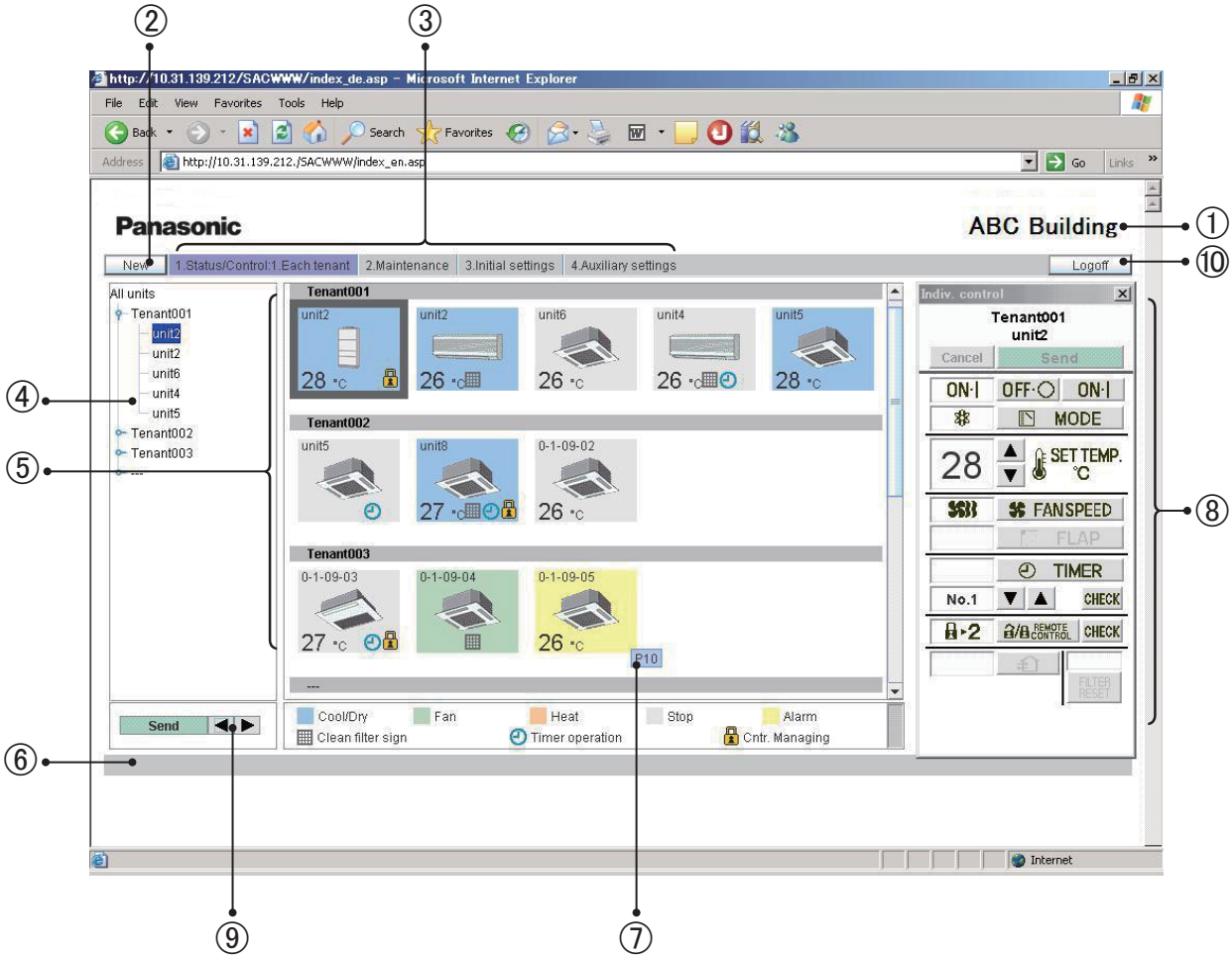

In a case of group control, only the main units will be displayed.

① Site name
The "Site name" that has been specified on the "WEB settings" screen (Main 3 Sub 3) is displayed.
② "New" button
For updating the data on the screen to the latest data. This button is displayed on every screen.

6 Status/Control

Main 1 Sub 1

③ Menu (The displayed menu varies, depending on the type of account used for login.)
Select a screen by displaying the pulldown menu, as shown below.

★ Menu for the "Admin." (Administrator) user

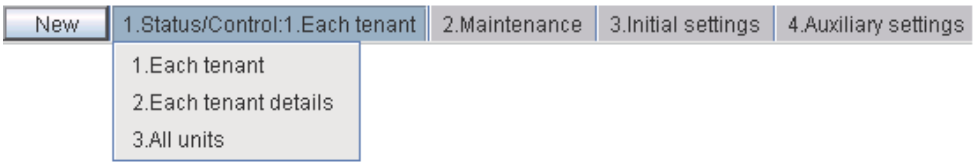

★ Menu for a "Special" user

★ Menu for a "General" user

3

④ Tree view section
A tree view of relationships among the indoor units that are connected with the Web Interface and tenants is displayed.
Indoor units and tenants to be selected vary, according to which part of the tree you click on.
Each indoor unit is selected when an indoor unit name (highlighted part in the screen example) is clicked on.
When a tenant name is clicked on, all the units belonging to the tenant are selected.
All indoor units are selected when the top line ("All units" in the screen example) of the tree is clicked on.
According to the type of account used for login (Admin, Special, or General), only the operable tenants will be displayed.

⑤ Icon display section
The indoor units connected with the Web Interface are displayed with icons.
For details on the meanings of colors and symbols of the icons, see the legend displayed below the icon display section.
When an indoor unit icon is clicked on, that indoor unit is individually selected, and the selected indoor-unit icon is indicated with an inversed frame.
When a tenant name is clicked on, all the indoor units belonging to that tenant are selected, and all the indoor-unit icons are indicated with highlighted frames.
While any of the icons is selected, the display for the corresponding remote controller (⑧) is displayed.

⑥ Notification column
The communication status between the Web browser and the Web Interface is displayed.
For example, while a screen is being updated, "Updating" is displayed.
When settings for an indoor unit are changed, while those data are being sent, "Sending" is displayed.

⑦ Alarm code display
If you move the cursor onto the icon of the indoor unit from which an alarm has been issued, an alarm code will be displayed after about 1 second.

6 Status/Control

Main 1 Sub 1

⑧ Remote control window

If any of the indoor units is selected, the remote control window shown below will be displayed for detailed setting modifications.

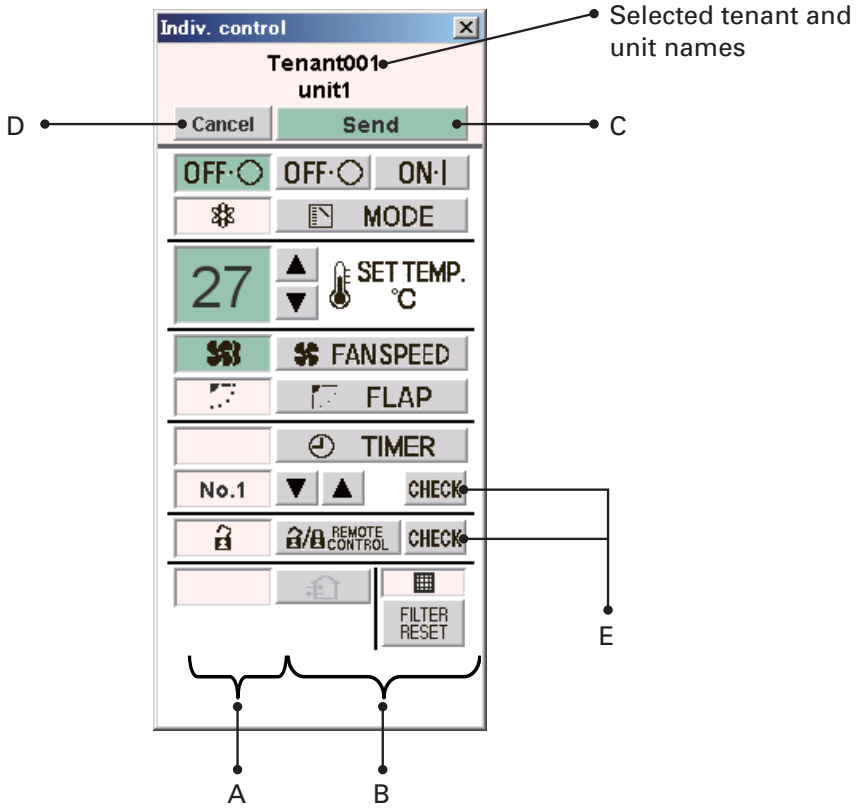

A: Status/Control screen section

The status and operations of the selected air conditioner are displayed.
If a setting is changed, the background color of the changed item will turn green, and the "Send" button will be enabled.
In the above example, the background color for the items of start/stop, setting temperature, and fan speed is green.
When the "Send" button is clicked on, data for all changes are enabled and sent to the Web Interface.
To disable the changes made, click on the "Cancel" button or select another air conditioner.

B: Control section

The settings for start/stop, operation mode, setting temperature, fan speed, and swing/fan direction can be changed.

6 Status/Control

Main 1 Sub 1

C: Send button

For sending all the changes made so far to the Web Interface.
The settings of the air conditioner will not be changed until the data for the changes are sent using this button.

D: Cancel button

For cancelling all the changes made so far.

E: Check buttons for timer setting and remote controller prohibition setting

For displaying a check screen for the corresponding settings.
(See “Tenant holiday/Timer special day” and “Prohibiting remote control use”.)
To return to the previous screen, click on the “Return” button.

*For a user who has logged in using the “General” user account, the buttons that have been set as prohibited will be disabled.
In addition, the “R/C” button and the “Check” button on its right will not be displayed.

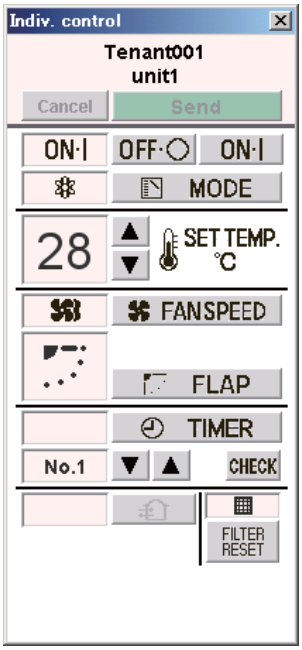

Remote controller for a “General” user

6 Status/Control

Main 1 Sub 1

⑨ Display order change buttons

For changing the display order of indoor units

After selecting an indoor unit whose order you wish to change, click on the "◀" or "▶" button. Each time the "◀" button is clicked on, the order of the indoor unit will move one place upward in the tree or leftward in the icon display section.

Each time the "▶" button is clicked on, the order of the indoor unit will move one place downward in the tree or rightward in the icon display section.

To register the changed setting, click on the "Send" button.

The changed order will be reflected on the "Each tenant details" and "All units" screens.

⑩ "Log off" button

For logging off the currently logged-in user. The login screen will be displayed.

6 Status/Control

Main 1 Sub 2

6.2 Displaying detailed information by tenant

When “1. Status/Control: 2. Each tenant details” is selected from the menu, the screen shown below is displayed. (The details of the displayed screen vary, depending on the type of account used for login.)
When any of the indoor units is clicked on, the remote controller screen will be displayed. Operations on this screen are the same as those on the “Each tenant” screen. See the relevant heading.

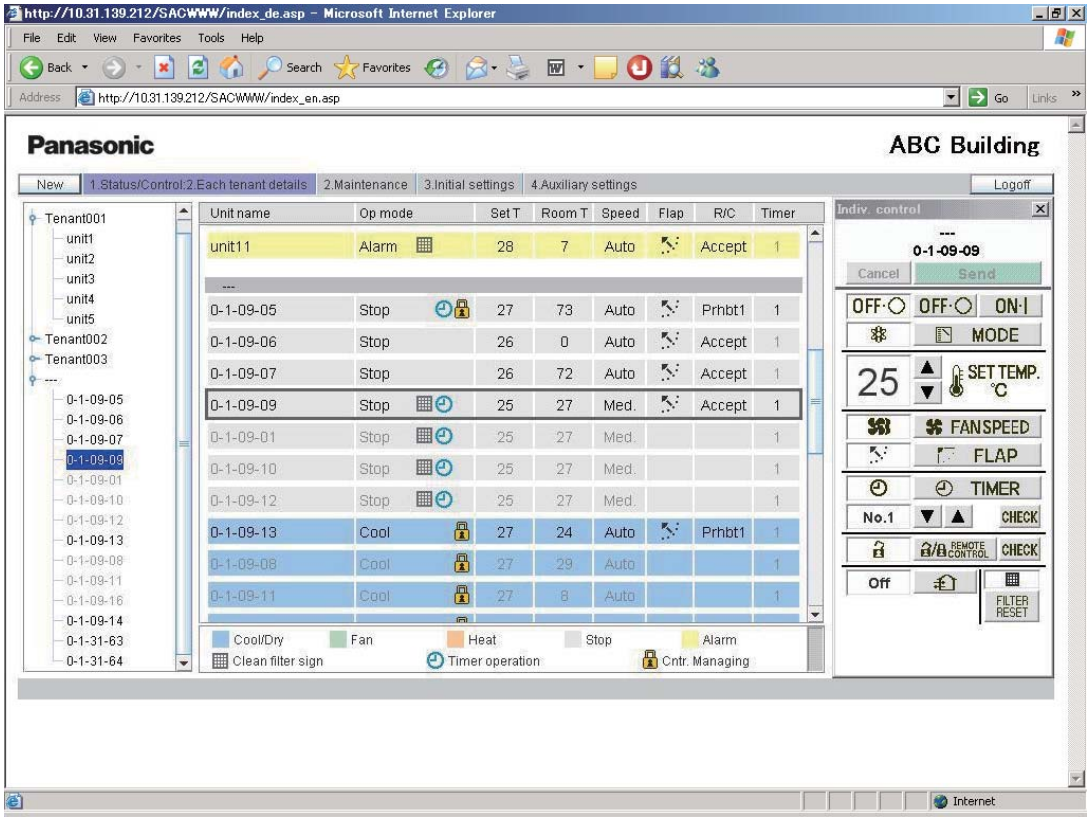

Even in a case of group control, the main units, as well as sub unit, are displayed.
The indications for sub units are grayed, and the remote controller screen will not open if you click on a grayed indication. To open the remote control screen, select the main unit.
For sub units, the cells for the flap setting and remote controller prohibition setting are blank.

6 Status/Control

Main 1 Sub 3

6.3 All Units

When “1. Status/Control: 3. All units” is selected from the menu, the screen shown below is displayed.
(The details of the displayed screen vary, depending on the type of account used for login.)
A maximum of 64 indoor units are displayed on a screen. In a case of group control, sub units, as well as main units, are displayed.
Operations on this screen are the same as those on the “Each tenant” screen. See the relevant heading.
When any of the indoor units is clicked on, the remote controller screen will be displayed.

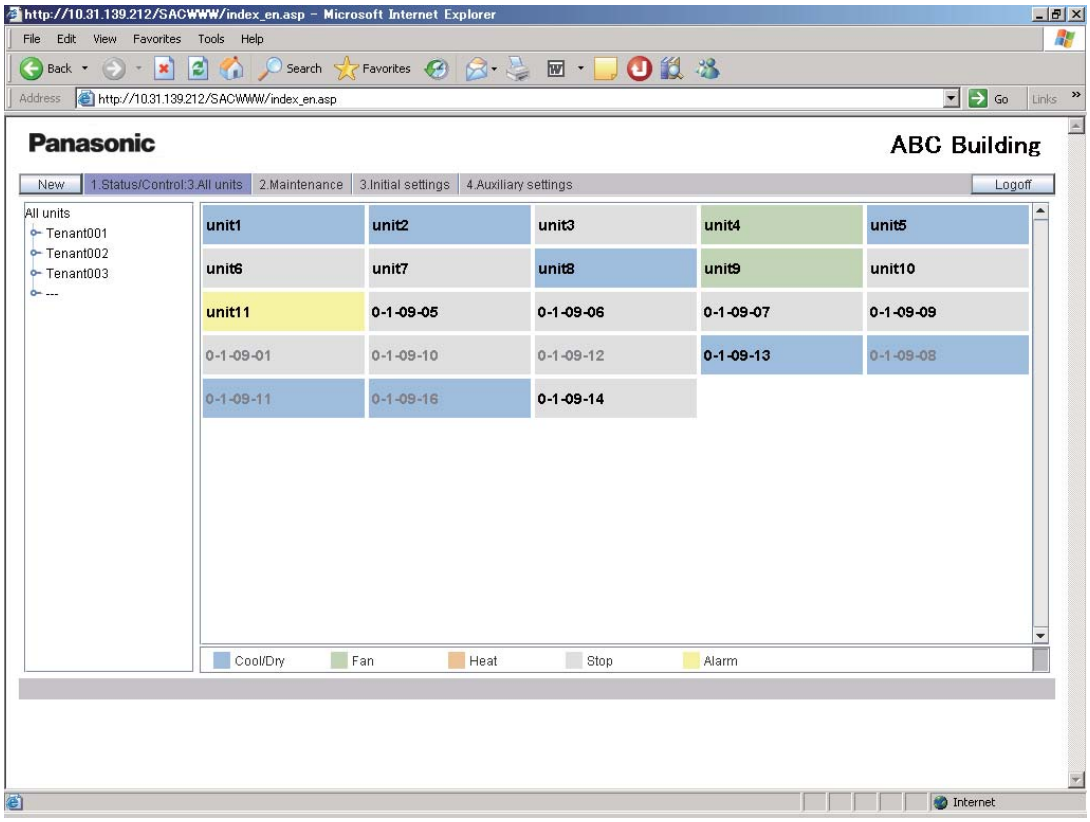

As the number of indoor units increases, the display space for one unit will be reduced. As a result, part of a unit name may become hidden.

7 Maintenance

Main 2 Sub 1

7.1 Alarm Log

If you log in using the administrator or special user account, when “2. Maintenance: 1. Alarm log” is selected from the menu, the screen shown below is displayed.
When an indoor unit is selected in the tree, the latest 14 alarm logs will be displayed.
If 15 or more alarms are issued, all but the latest 14 logs will be erased.
A log for restoration from an error will not be recorded.

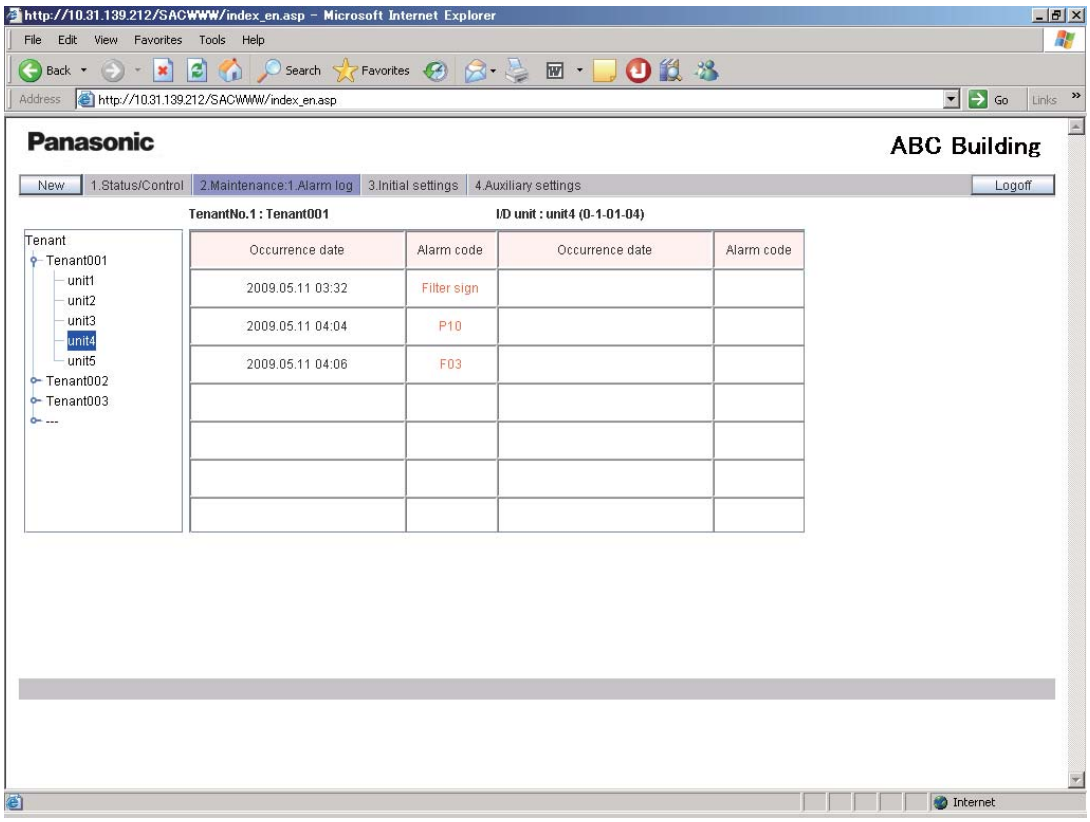

The content of an alarm is indicated with an alarm code.
For details on the meanings of alarm codes, refer to the operation manual of the air conditioners or consult your service representative.

7 Maintenance

Main 2 Sub 2

7.2 Sent Mail Log

If you log in using the administrator user account, when “2. Maintenance: 2. Sent mail log” is selected from the menu, the screen shown below is displayed.
The logs for pieces of e-mail that were delivered to the specified addresses when an alarm was issued from air conditioners or when the air conditioners were restored are displayed.

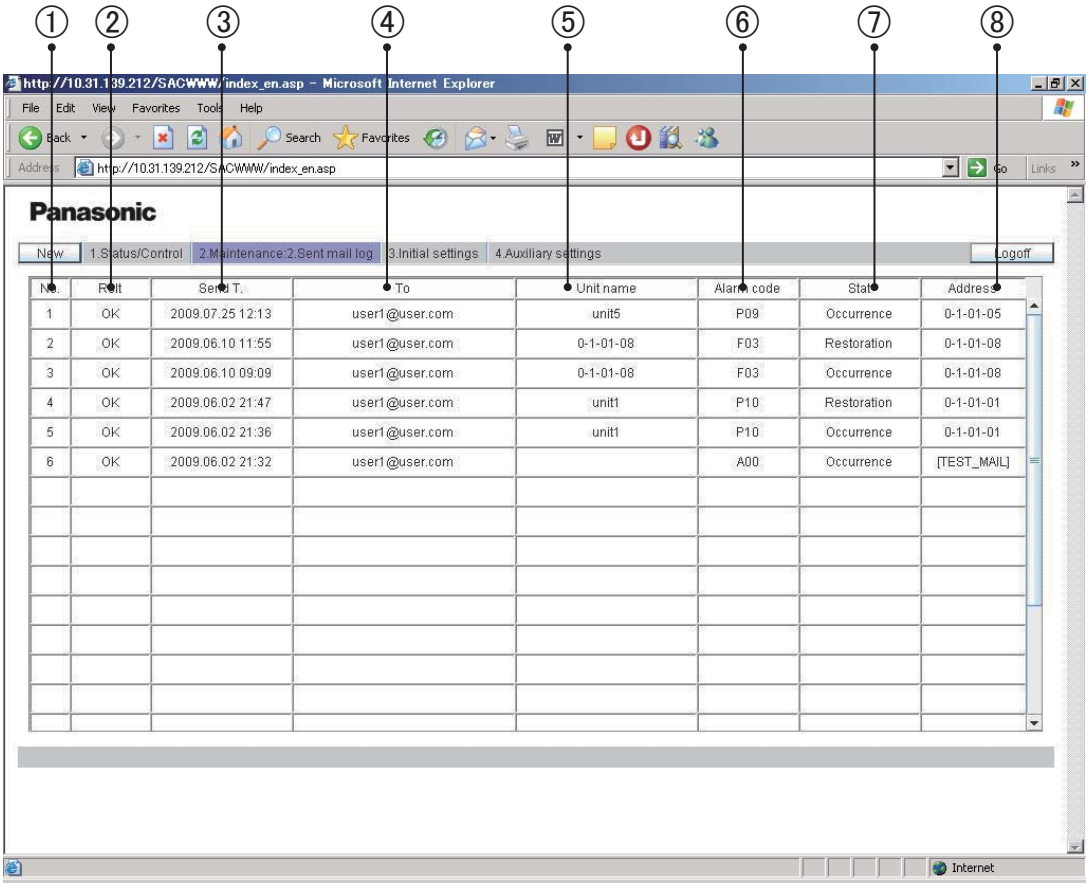

① No.
The entry numbers for the sent mail log. With a maximum of 20 (No. 1 to 20) possible entries, the newest entries appear at the top of the list. When the number of entries exceeds 20, entries are deleted starting with the oldest.
As up to three mail recipients can be specified, up to three log entries can be recorded for one alarm occurrence.
When normal status is restored for the alarm, up to 3 e-mail delivery logs are recorded, in the same way.
② Rslt
“OK” appears when a piece of alarm mail is sent properly, and “N/A” appears when sending fails.
③ Send T.
The date and time a piece of alarm mail was sent (or sending was attempted).
④ To
The recipient address a piece of alarm mail was sent to. If the address is too long, only part of the address may appear.
⑤ Unit name
The name of the indoor unit for which the alarm occurred.

7 Maintenance

Main 2 Sub 2

⑥ Alarm code
The code for the alarm that occurred.
⑦ Stat
“Occurrence” appears when a notification of an alarm occurrence is sent, and
“Restoration” appears when a notification of an alarm restoration is sent.
⑧ Address
The address of the indoor unit for which the alarm occurred.
The display format is “0-1- Outdoor unit system address - Indoor unit address”.
When a piece of test mail is sent, “TEST_MAIL” appears.

*For details on the setting of a destination address for alarm e-mail, see “WEB settings” (Main 3 Sub 3).

8 Initial Settings

Main 3 Sub 1

8.1 Date and Time Setting

If you log in using the administrator user account, when “3. Initial settings: 1. Date” is selected from the menu, the screen shown below is displayed.
Setting of the current date and time can be made.
Be sure to set the date and time before starting any operation, as this setting is required for program timer settings.

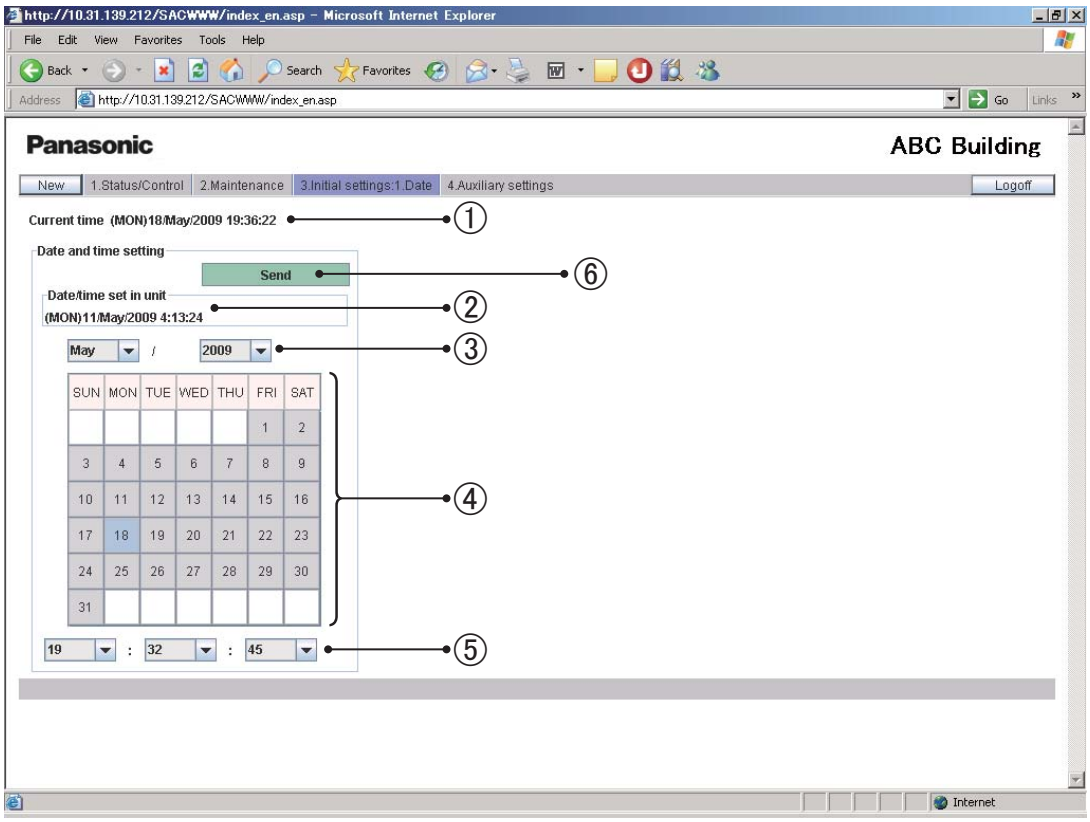

① The current date and time settings of the PC are displayed. (This indication is periodically updated.)
② The current date and time settings of the Web Interface main unit are displayed.
(Only when this screen is displayed or updated is this indication updated.)
③ To set the date, click on “▼” to open the pulldown menu shown below. Select the year (2000–2070) and month.

8 Initial Settings

Main 3 Sub 1

④ Directly click on the day to be set. The selected day will be highlighted in light blue.
⑤ To set the time, click on "▼" to open the pulldown menu shown below.
Select the hour, minute, and second.

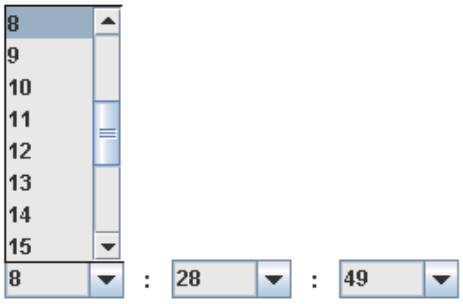

⑥ When you click on "Send", the following message will be displayed. Click on "YES" with the time signal. The date and time settings of the Web Interface are updated.
The date and time of the PC will not be updated.

Note: In Steps ③, ④, and ⑤, the settings of the PC will be reflected when this screen is displayed or updated.

8 Initial Settings

Main 3 Sub 2

8.2 Unit/Tenant

If you log in using the administrator user account, when “3. Initial settings: 2. Unit/Tenant” is selected from the menu, the screen shown below is displayed.
Setting of the central control addresses, unit names, and tenants can be made.

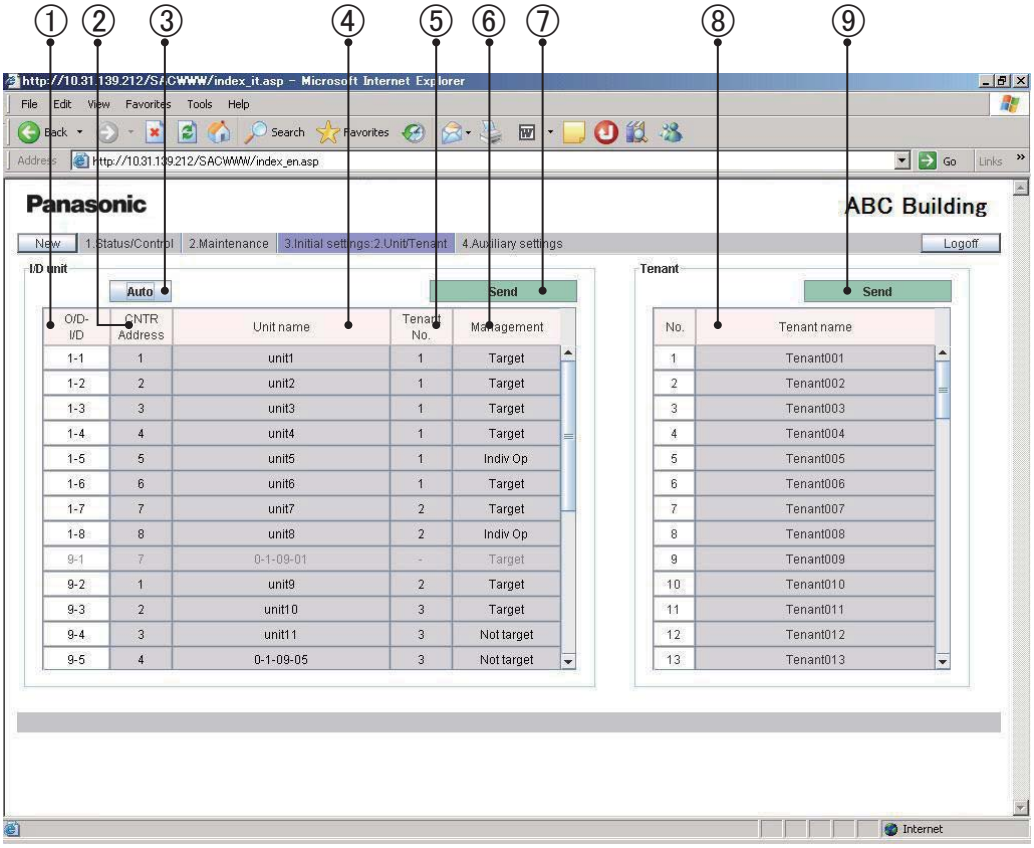

① The address for each indoor unit is displayed. The display format is “Outdoor system address – Indoor address”.

② The current central control address for each indoor unit is displayed.
To set or change a central control address, click on the cell you wish to set/change then enter a value in the range of 1–64.
In a case of group control, a sub unit cannot be selected. The central control address of the main unit will be applied to the sub units.
If a value outside the range of 1–64 is entered, the message shown below is displayed.

③ If you click on “Auto”, the central control addresses will be automatically allocated from 1 to the indoor units in ascending order of the indoor unit address.

The same central control address must not be assigned to two or more indoor units belonging to the same link system. Any such invalid input will be cancelled.

If another piece of central control equipment (system controller, etc.) is connected, it is recommended to set the central control addresses on such equipment.

8 Initial Settings

Main 3 Sub 2

④ The name of each indoor unit is displayed.
To set or change the name of a unit, click on the cell you wish to set/change then enter a name, using up to 12 characters.
An "=" (equal sign) or "," (comma) cannot be used.
⑤ The tenant No. for each indoor unit is displayed.
A "Tenant" represents a group of several indoor units used on the "Each tenant" screen and other screens.
To set or change a tenant No., click on the cell you wish to set/change then enter a value in the range of 1–64.
In a case of group control, a sub unit cannot be selected. The same tenant No. as that for the main unit is allocated to the sub units.
If a value outside the range of 1–64 is entered, the message shown below is displayed.

⑥ The type of management for each indoor unit can be set.
To select the management type, click on "▼" to open the pulldown menu, as shown below. Select the type.

- Target : The corresponding indoor unit is a target for management. The factory default is "Target" for all the indoor units.
- Indiv Op : The indoor units that are set to "Indiv Op" will be excluded from the operations for all units. When the operations (start/stop, temperature setting, etc.) for all units or all tenants are performed by the Web browser, those commands will not be sent to the units set to "Indiv Op".
- Not target : The indoor units that are set to "Not target" will be excluded from targets of all operations, monitoring, and display.

Such units will not be displayed on any screen other than this one.

⑦ Clicking on this button will enable the settings of ②, ④, ⑤, and ⑥ above and send the data to the Web Interface. The changed data will only be enabled after being sent.
The data for tenant name settings shown below will not be sent.
⑧ The tenant name for each tenant number is displayed. A maximum of 64 tenant names can be set.
To set or change the name of a unit, click on the cell you wish to set/change then enter a name, using up to 20 characters.
An "=" (equal sign) cannot be used.
⑨ Clicking on this button will enable the settings of the above tenant names and send the data to the Web Interface. The changed data will only be enabled after being sent.
The data of the settings of the above ②, ④, ⑤, and ⑥ will not be sent.

8 Initial Settings

Main 3 Sub 3

8.3 WEB Settings

If you log in using the administrator user account, when “3. Initial settings: 3. WEB settings” is selected from the menu, the screen shown below is displayed.
The Web-related settings, such as site name, e-mail settings, and network settings, can be made.
Click on a box for an item you wish to set and directly enter values.

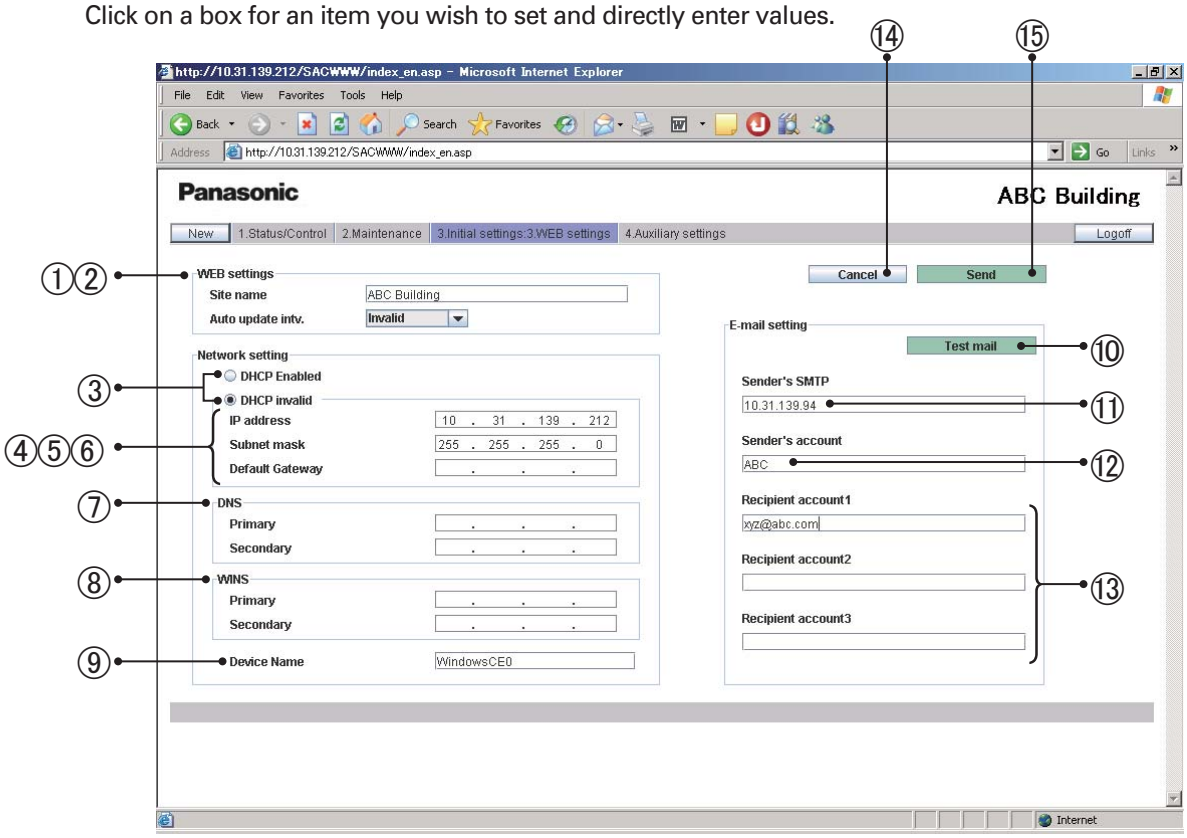

[WEB settings]

① Enter a site name (within 40 characters). An “=” (equal sign) cannot be used.

② An automatic updating interval of a screen that will be displayed on the Web browser can be set. You can select from among Invalid, 10 seconds, 20 seconds, 30 seconds, 1 minute, 2 minutes, 10 minutes, 30 minutes, and 1 hour.
If “Invalid” is selected, the data on a screen will not be updated until you click on the “New” button.

* The following screens will be automatically updated:
Each tenant (Main 1 Sub 1)
Each tenant details (Main 1 Sub 2)
All units (Main 1 Sub 3)

[Network setting]

③ When a DHCP instead of a static IP is used, select the “DHCP Enabled” radio button.
If “DHCP Enabled” is selected, items ④–⑥ will be disabled.
The factory default is “DHCP invalid”.

④ Enter the IP address for the Web Interface. Refer to the settings of other devices, such as the PC and router. The factory default is “192.168.1.1”.

⑤ Enter the subnet mask for the Web Interface. Refer to the settings of other devices, such as the PC and router.

⑥ Enter the IP address of the default gateway that is connected with the Web Interface, as required.

8 Initial Settings

Main 3 Sub 3

⑦ Enter the IP addresses for the primary and secondary DNS servers, as required.
⑧ Enter the IP addresses for the primary and secondary WINS servers, as required.
⑨ Enter a device name (ID name) of the Web Interface.
(This device name is used for identifying the Web Interface when a DNS server is used.)
Up to 15 characters, "-" (hyphen), and "_" (underscore) can be used.
Only an alphabetic (A–Z, a–z) can be used for the first character.
Neither a "-" (hyphen) nor an "_" (underscore) can be used for the last character.

[E-mail setting] The settings for automatic delivery of e-mail notifying of an occurrence of or restoration from an error of an air conditioner:
⑩ For sending test mail
⑪ Enter the IP address (or domain name) of the mail (SMTP) server that is separately contracted.
One-byte alphanumerics, "@" (at sign), "・" (bullet), "_" (underscore), and ":" (colon) can be used.
⑫ Enter a sender's account name (within 40 characters).
An "=" (equal sign) cannot be used.
⑬ Enter a recipient account name (mail address) (within 40 characters).
A maximum of 3 accounts can be set.
⑭ For disabling input/changed data and returning to the original settings
⑮ Clicking on this button will enable the input settings and send them to the Web Interface. The input data will only be enabled after being sent.
When the following message is displayed, click on "YES":

If any of the settings ③–⑨ is changed, the Web Interface will be restarted after the message shown below is displayed. Wait for at least 5 minutes before logging in again.

Network settings have been changed. The unit will restart. Please log in again after about 5 minutes.

* For details on the settings on this screen, consult the network administrator for the environment where the Web Interface has been installed.
* The range of values that can be set for the IP addresses, subnet mask, default gateway, and the DNS and WINS blocks is 0–255.
* For the IP addresses, neither "0.0.0.0" nor "255.255.255.255" can be set.
* If an invalid value is entered, the following error message will be displayed:

8 Initial Settings

Main 3 Sub 4

8.4 User Settings

If you log in using the administrator user account, when “3. Initial settings: 4. User settings” is selected from the menu, the screen shown below is displayed.
Setting of the user ID, password, and authority types that are required for logging in the Web Interface can be made.

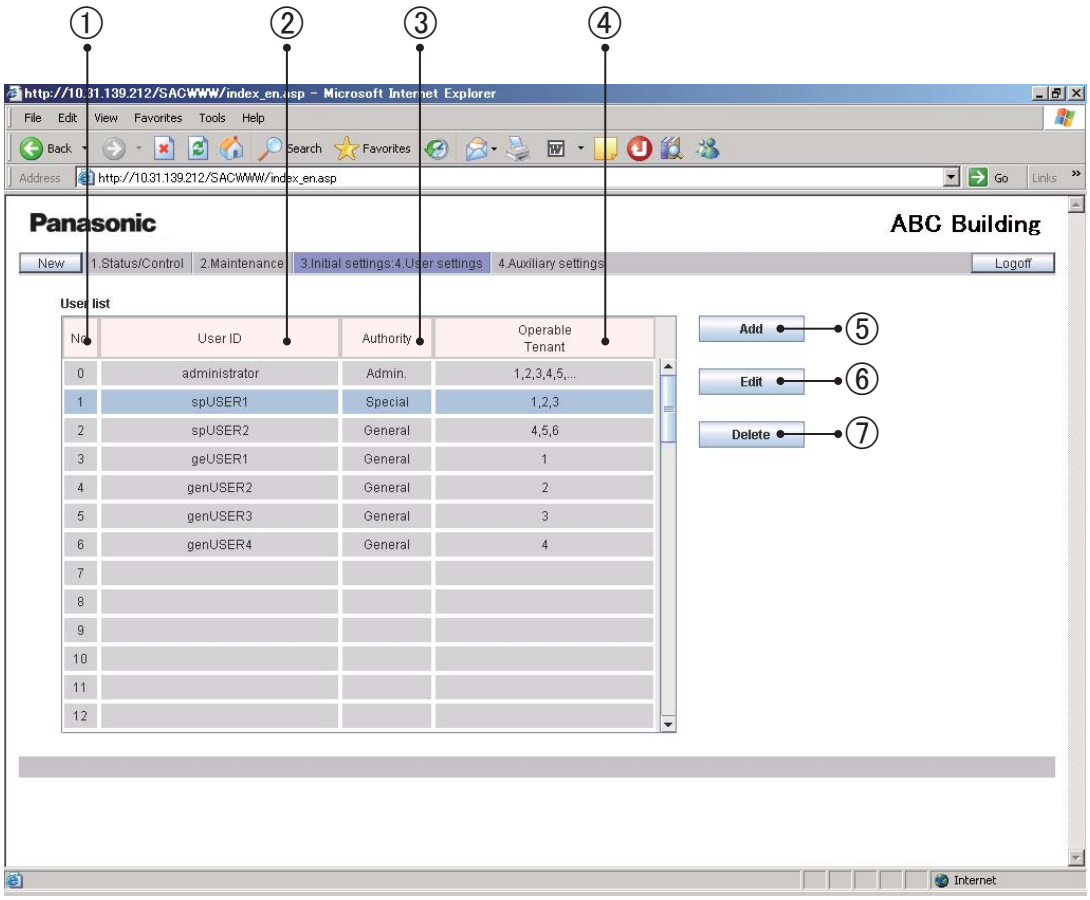

① User No. A maximum of 64 (No. 1–64) users can be set.
At the factory, the Administrator user shown below is registered at the top (No. 0).
After logging in using this administrator user account, change the password.

User ID : administrator
Password : admin

② User ID

③ The user authority types include “Admin.”, “Special” and “General”. Only one “Admin.” can be set, and the administrator user is displayed at the top (No. 0).

④ The tenant numbers of whom monitoring and operations are allowed for that user are displayed. Although a maximum of 64 tenants can be set, only 5 are displayed in the cell at a time. If there are 6 or more tenants, “...” will be affixed.

⑤ For adding a new user. If users have been already set for all of No. 1–64, this button is disabled.

⑥ For editing the already set user data

⑦ For deleting a user setting. The administrator user at the top cannot be deleted.

8 Initial Settings

Main 3 Sub 4

(1) Adding a New User

If you click on the "Add" button, the following screen will be displayed:

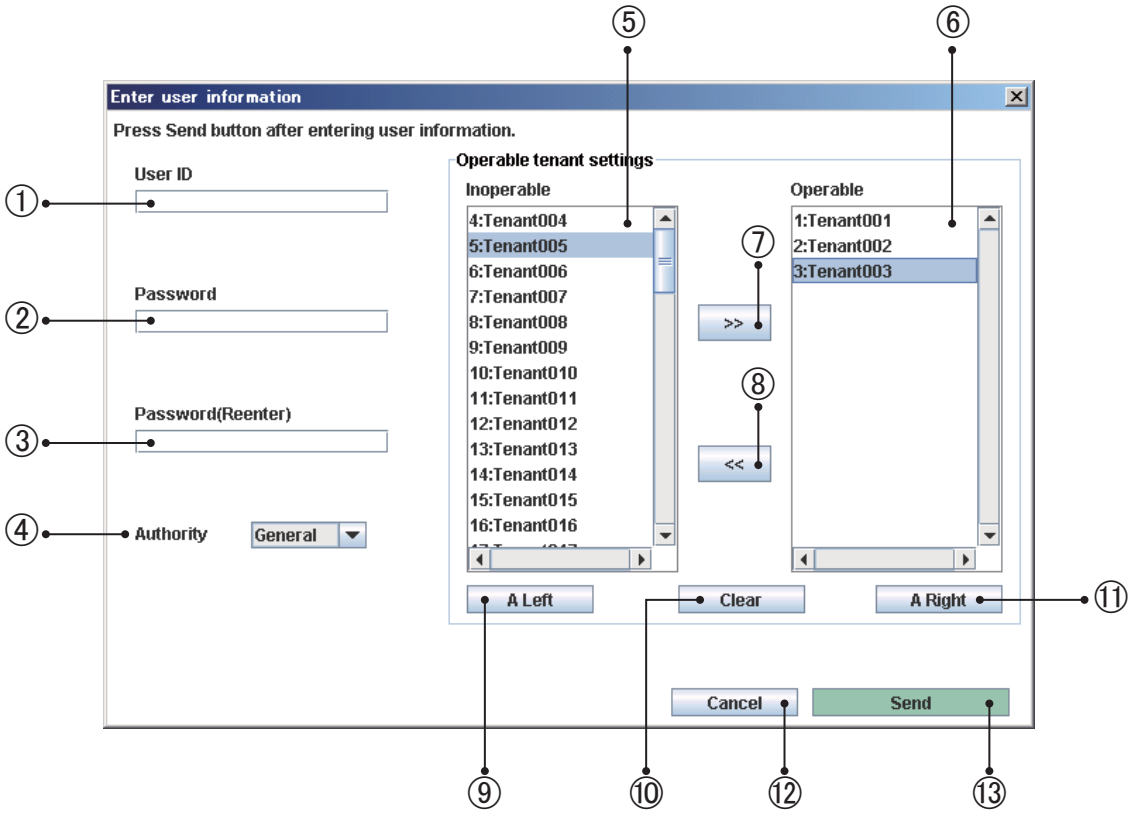

If a user is added, that user will be registered as the lowest user number to which no user is currently registered.
No user number to be used for registration can be skipped.

① Enter a user ID (within 20 characters).
② Enter a password (within 10 characters).
③ For reconfirmation, enter the same password as that in Step ②. (In Steps ② and ③, input characters will not be displayed on the screen.)
④ Select the type of user authority, "Special" or "General".
⑤ A list of the tenants of whom monitoring and operations are not allowed for that user is displayed.
⑥ A list of the tenants of whom monitoring and operations are allowed for that user is displayed.

After selecting a tenant or several tenants on the list at the left or right, perform the operations described below.
Several tenants can be simultaneously selected in the following ways:

- While holding the Ctrl key pressed, click on the tenants you wish to select one by one.
- After selecting one tenant, click on another tenant while holding the Shift key pressed. All the tenants displayed between the selected tenants will be selected.

⑦ The tenant(s) selected on the left list will be moved to the right list and registered as operable target(s).
⑧ The tenant(s) selected on the right list will be moved to the left list and registered as inoperable target(s).

8 Initial Settings

Main 3 Sub 4

⑨ For selecting all the tenants on the left list
⑩ For cancelling the current selection of tenant(s) on both the left and right lists
⑪ For selecting all the tenants on the right list
⑫ For cancelling all the settings made and closing the screen
⑬ For enabling and sending the set data to the Web Interface for registering the operable tenants

(2) Editing the data of existing users

- If you click on the "Edit" button, the same screen as that shown in the previous heading will be displayed.
- The current settings displayed on the screen can be edited in the same manner as when adding a user.
- The changed settings will be enabled only after they are sent by clicking on the "Send" button.
- For the administrator user located at the top (No. 0), only the user ID and password can be changed.

The authority type is fixed at "Admin." and cannot be changed.
The operable tenants are fixed at "All tenants" and cannot be changed.

(3) Deleting the data of existing users

After selecting a user, click on the "Delete" button. The following message will be displayed.

If you click on "YES", that user will be deleted.
When a user is deleted, the subsequent users will be shifted upward, and their user numbers will be decreased by one.
If the same user is registered again, the user number for that user will be the final user number.
The administrator user at the top (No. 0) cannot be deleted.

(4) Error messages

If any entered data are wrong, one of the following error messages may be displayed when you click on the "Send" button.
Correct the corresponding data and send the data again.

[Invalid user ID entered.]
A wrong or no user ID (no input) was entered and sent.

8 Initial Settings

Main 3 Sub 4

[The user ID already exists.]

The input user ID has already been registered.

[Password reentry is incorrect.]

The password reentered in Step ③ is not the same as that entered in Step ②.

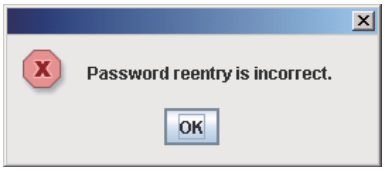

[Administrator user ID has been changed.]

If the administrator user ID is changed, the message shown below will be displayed.

Log in again with the new user ID.

Administrator user ID has been changed.

Please log in again with new user ID.

8 Initial Settings

Main 3 Sub 4

(5) Comparison of authority for each user

○: Denotes that corresponding operations and displays are available.

× : Denotes that neither the corresponding function nor its screen display is available.

All other functions and displays that are not shown in the table below are available for all users.

Users / Functions and displays	Admin. user	Special user	General user
Operable tenants	All	Only set tenants	Only set tenants
Prohibit R/C selection 1–4 (Remote controller screen)	○	○	×
Alarm logs	○	○	×
Sent mail log	○	×	×
Date and time setting	○	×	×
Unit and tenant setting	○	×	×
Tenant name setting	○	×	×
WEB settings	○	×	×
User settings	○	×	×
Program timers setting	○	Checking only	Checking only
Tenant holiday and timer special days setting	○	×	×
Remote controller prohibition setting	○	Checking only	×
Other settings	○	×	×

9 Auxiliary Settings

Main 4 Sub 1

9.1 Program Timer

If you log in using the administrator user account, when “4. Auxiliary settings: 1.Program timer” is selected from the menu, the screen shown below is displayed.
Settings for the daily timers and weekly timers can be made. (For a special or general user, only checking of the timer settings is possible.)

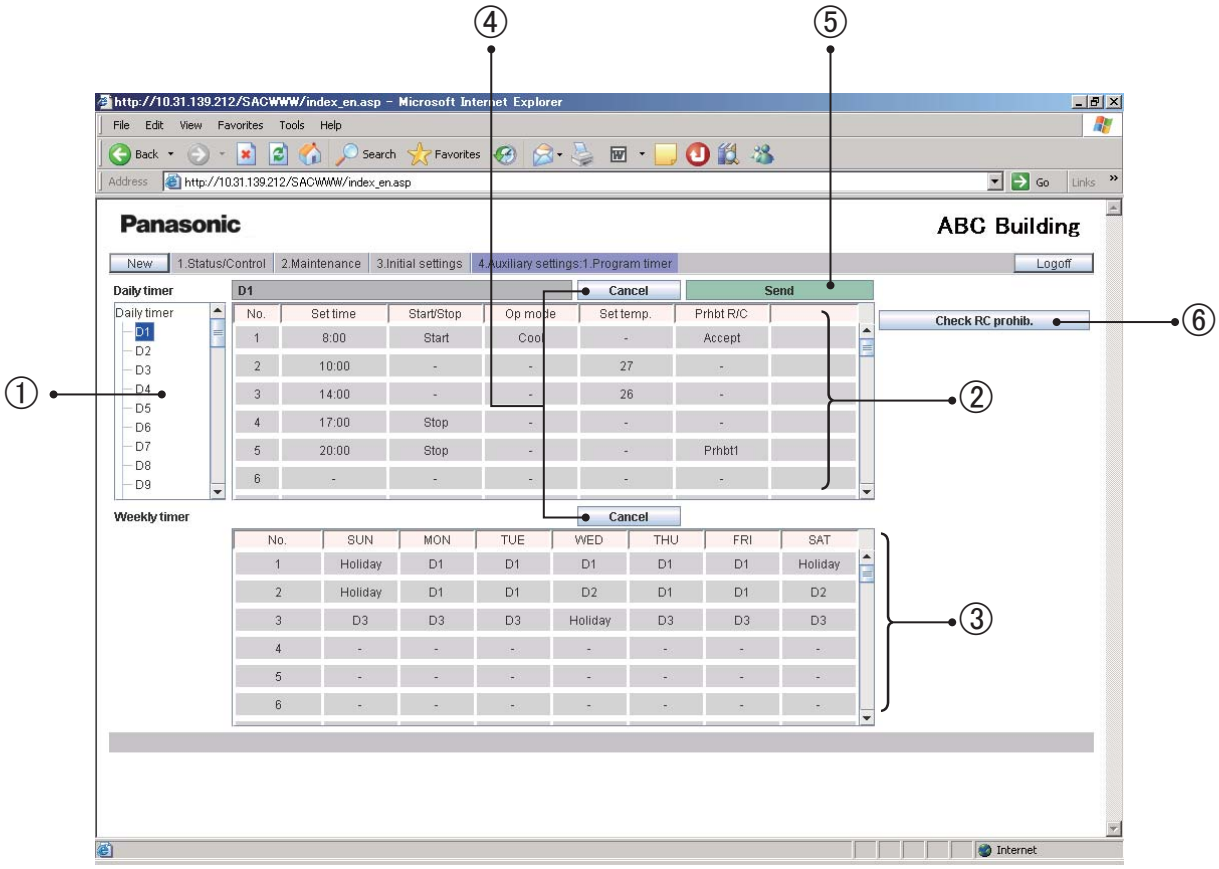

① When a daily timer No. is selected in the tree, the current setting for that timer is displayed.
A maximum of 50 daily timers, one timer for a “Holiday”, and five timers for “Sp day” (special days) are provided.
The “Holiday” timer is a daily timer reserved for a holiday for the tenant.
An “Sp day” timer is a daily timer reserved for a special day for the tenant.
For details on how to use them, see “Tenant holiday/Timer special day”.

② To set operation time and operations for a daily timer, click on a setting item you wish to set to open the pulldown menu, as shown below. Select operation time or operation.

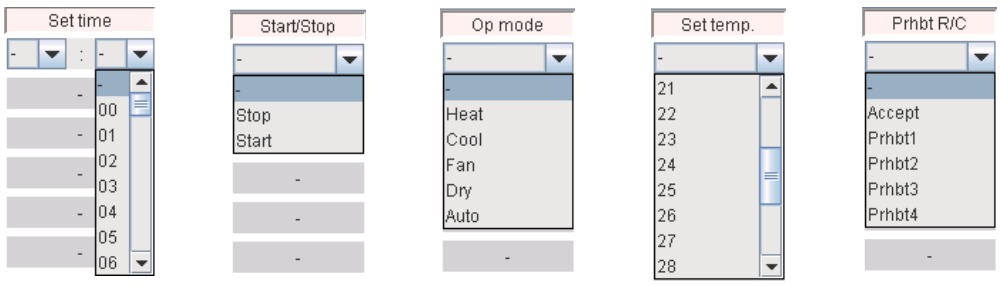

Up to 50 actions per day can be set for a daily timer.
Several actions can be set for one operation time.

9 Auxiliary Settings

Main 4 Sub 1

③ For a weekly timer, select a daily timer from the pulldown menu in the same way as with a daily timer.

Select a desired daily timer number (D1–D50, holiday, or special day 1–5) for each day of the week.

A maximum of 50 weekly timers can be set.

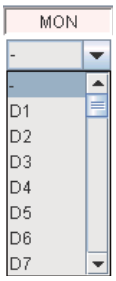

④ For disabling input/changed data and returning to the original settings.

⑤ Clicking on this button will enable the input settings and send them to the Web Interface. The input data will only be enabled after being sent.

Setting data for each daily timer No. (D1, D2, . . .) must be sent each time the setting for the daily timer is completed. If you attempt to move to D2 setting while you are setting D1, for example, the error message “Send for each daily timer.” will be displayed, as shown below.

If this message is displayed, click on the “Send” button to enable the setting, or click on the “Cancel” button to disable the setting then perform the setting for another daily timer No.

⑥ The items for which operations with the remote controller are prohibited can be confirmed.

When you click on this button, the screen shown below will be displayed.

You can only confirm the prohibited items. You cannot change the setting. To change settings, see “Prohibiting remote control use”.

Check RC prohib.

	Start/Stop	Oper. mode	Set temp.	Fan speed	Set flap	
Prohibition1	X	O	O	O	O	
Prohibition2	X	X	X	O	O	
Prohibition3	O	X	X	O	O	
Prohibition4	O	X	O	O	O	

The setting temperature will be automatically set within the range of each air conditioner's upper and lower limit values during actual operation, as the upper and lower temperature limits vary depending on the indoor unit models. Setting for an item for which “Set time” is not set will be invalid.

9 Auxiliary Settings

Main 4 Sub 2

9.2 Tenant holiday/Timer special day

If you log in using the administrator user account, when “4. Auxiliary settings: 2.Ten.Ho/TimerSp.Day” is selected from the menu, the screen shown below is displayed.
The timer settings for the tenant holiday and special days can be made.

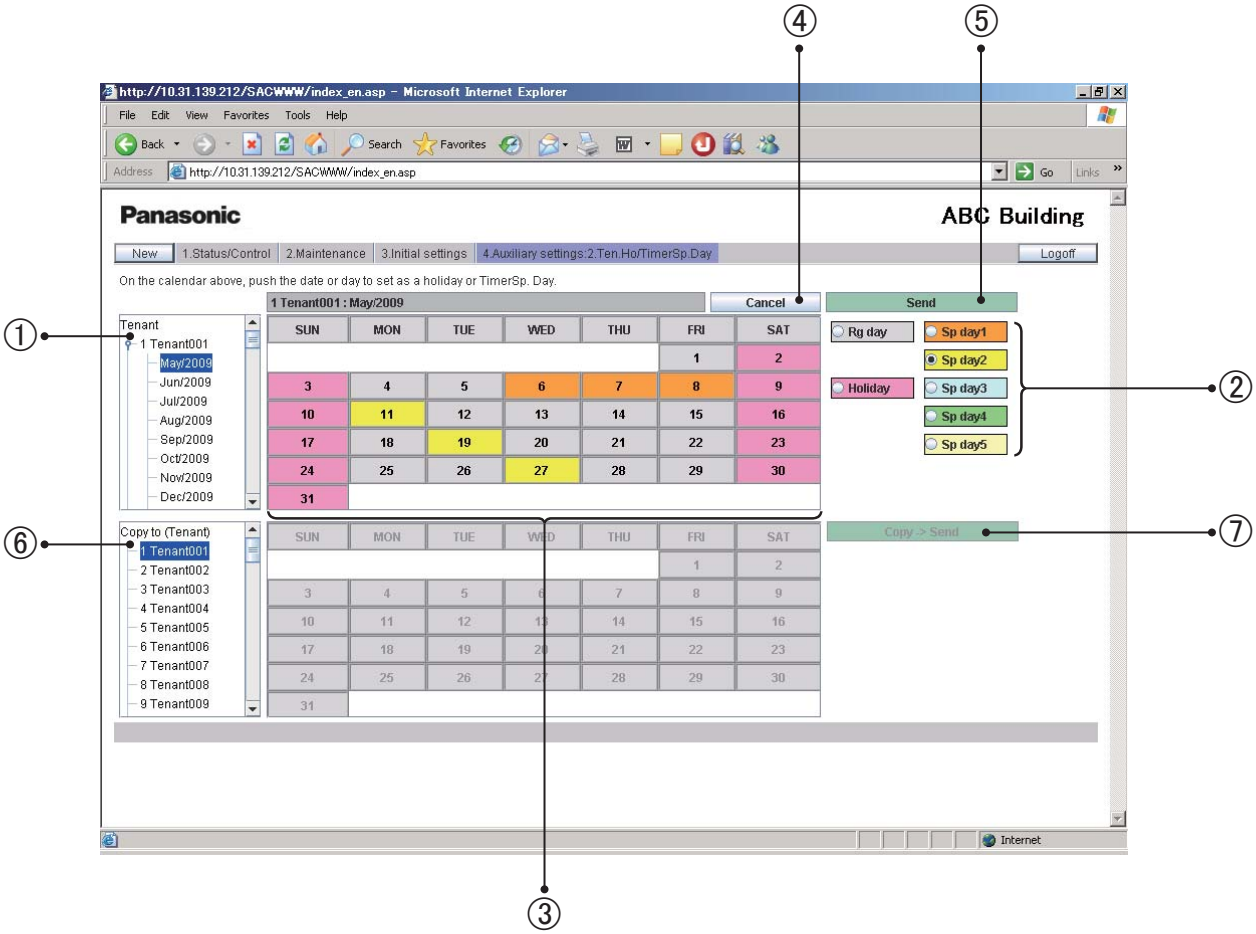

① When a month for your desired tenant No. is selected in the tree, the current timer settings are displayed.
Settings for the next 2 years are possible.
② Select the type of days to be set (regular days, holiday, special days 1–5).
③ Click on a day or a day of the week. That day or day of the week will be set as a holiday or timer special day that has been selected in Step ②. Programmed timer operation set on the “Ten.Ho/TimerSp.Day” screen will be executed on that day or day of the week.
If you click on an individual day, the selected timer is set for that day; if you click on a day of the week, the selected timer is set for that day of the week.
To cancel a holiday or timer special day setting, select “Rg day” in Step ② and select the day or day of the week.
④ For disabling input/changed data and returning to the original settings.
⑤ Clicking on this button will enable the input settings and send them to the Web Interface. The input data will only be enabled after being sent.

9 Auxiliary Settings

Main 4 Sub 2

The tenant holiday and timer special days settings must be performed for individual tenants.
If you attempt to move to Tenant 002 setting while you are setting Tenant 001, for example, the error message "Send for each tenant." will be displayed, as shown below.

If this message is displayed, click on the "Send" button to enable the setting, or click on the "Cancel" button to disable the setting then perform the setting for another tenant.

⑥ Select a tenant to whom you wish to copy data of holiday/timer special days setting.
⑦ If you click on "Copy –> Send", the following message will be displayed:

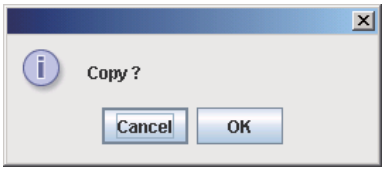

If you click on "OK", the setting data for the next 2 years will be copied from the upper (source) tenant to the lower (destination) tenant.
If the setting for the upper (source) tenant is not valid, the "Copy –> Send" button is not available.
First click on the "Send" button to make the setting valid then click on the "Copy –> Send" button.

9 Auxiliary Settings

Main 4 Sub 3

9.3 Prohibiting remote control use

If you log in using the administrator user account, when “4. Auxiliary settings: 3.Prohibit R/C” is selected from the menu, the screen shown below is displayed.
Setting of the items for which operations with the remote controller for an air conditioner are prohibited can be made. (For a special user, only checking of the settings is possible.)

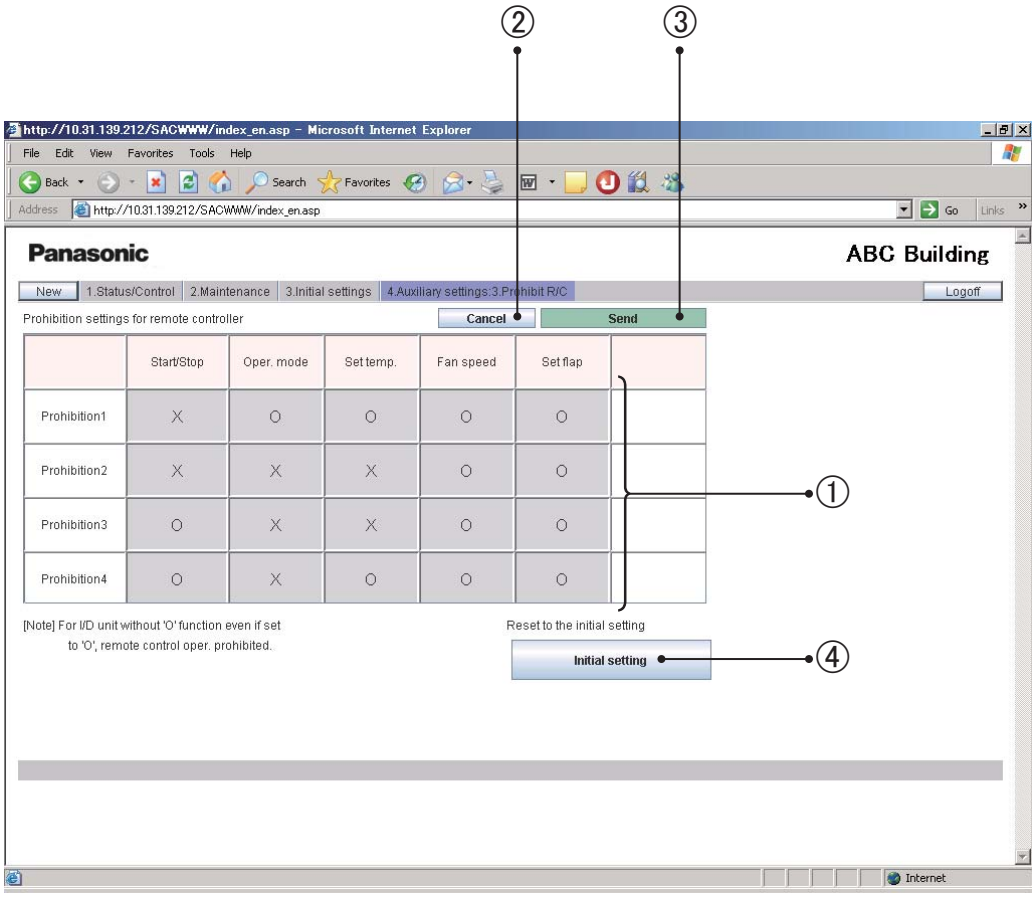

① Each time you click on a setting item, “○” and “×” will appear alternately.
② For disabling input/changed data and returning to the original settings.
③ Clicking on this button will enable the input settings and send them to the Web Interface. The input data will only be enabled after being sent.
④ To return the setting to the initial setting, click on “Initial setting”. When the following message is displayed, click on “YES”. The factory default setting (the setting as shown in the above figure) will be restored, and the data are also sent to the Web Interface.

9 Auxiliary Settings

Main 4 Sub 3

Setting all the setting items to ○ (allowed) is not possible, because this has the same meaning that remote controller operations are permitted.
The following error message will be displayed.

9 Auxiliary Settings

Main 4 Sub 4

9.4 Other settings

If you log in using the administrator user account, when “4. Auxiliary settings: 4.Other settings” is selected from the menu, the screen shown below is displayed.

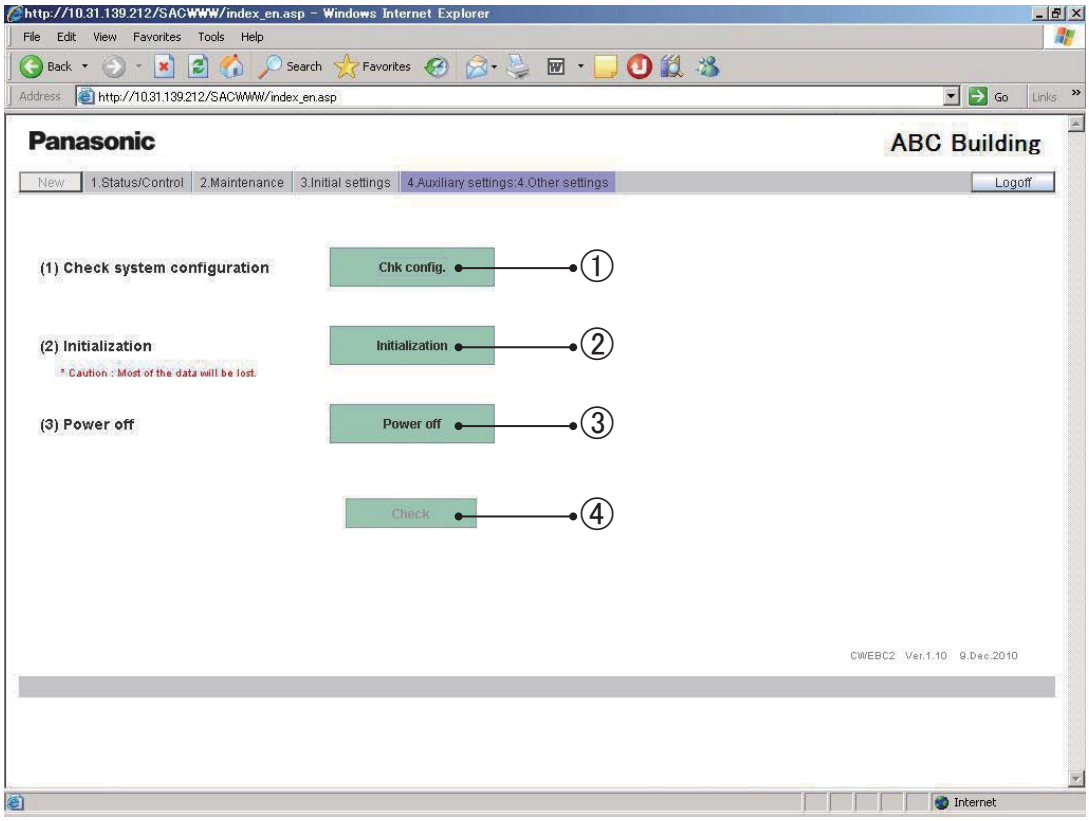

(1) Configuration check

① If you click on “Chk config.”, a system configuration check can be performed.
Perform a configuration check after addition/deletion of units or address change is performed on the air conditioner side.
When the following message is displayed, click on “YES” to perform a system configuration check.

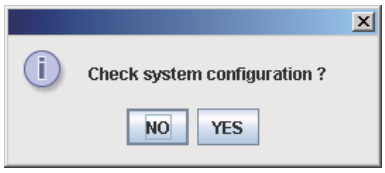

9 Auxiliary Settings

Main 4 Sub 4

The following message will be displayed while checking the system configuration. While this message is displayed, no Web operation is possible. Wait until the check is completed.

If the checking result shows that the system configuration has not been changed, the following message will be displayed.

If the checking result shows that the system configuration has been changed, the following message will be displayed.

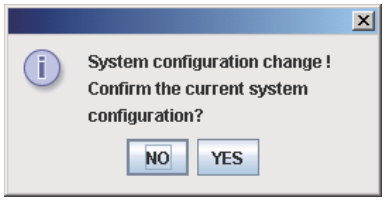

Note that if you leave the screen in this state for 1 hour or more, the current system configuration confirmation process will be automatically performed and registered.

If you click on “YES”, registration of the system configuration and data storage will be performed.
During this process, the following message is displayed, and no Web operation is possible. Wait until the process is completed.

After registration of the system configuration and data storage are completed, the following message will be displayed.

9 Auxiliary Settings

Main 4 Sub 4

[Notes on system configuration check]

- Never perform a system configuration check unless you have actually changed the system configuration.

System configuration changes include addition, moving, and removal of units, and address change.

- Never perform a system configuration check when a power outage occurs on the air conditioner side or when temporary communication failure is generated.

If a system configuration registration is performed in such situations, the air conditioners that should be recognized may not be recognized.

- If "System configuration change!" is displayed as a result of your accidentally performing a system configuration check, never proceed to the current system configuration registration process. First take correction measures against the causal erroneous status, then click on "NO".

If the system configuration is confirmed to be as it originally was, "No configuration change" will be displayed.

- Note that if you leave the screen with the message "System configuration change!" displayed for 1 hour or more, the current system configuration confirmation process will be automatically performed and registered.

(2) Initialization

② If you click on the "Initialization" button, the message shown below will be displayed:
If you click on "YES", system configuration data and setting data will be deleted.
All alarm logs and alarm e-mail delivery logs will be also deleted.

!! Do not make imprudent initialization.

The following data will not be deleted:

- Network settings ("WEB settings" screen)
  IP addresses, subnet mask, default gateway, DNS, WINS, and device name
- All user settings ("User settings" screen)

(3) If you attempt to log in using a special/general user account while the Web Interface is in the process of a system configuration check, current system configuration registration, or initialization, the message shown below will be displayed, and you cannot log in. Wait then try to log in again.

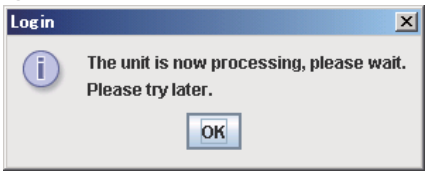

(The administrator user can log in, but Web operations will not be available. The above message will be displayed) The same message will be also displayed when an already logged in user attempts to perform any operation while the Web Interface is in the process of the above procedures.

9 Auxiliary Settings

Main 4 Sub 4

(4) To close the dialog box displayed in the process of a system configuration check, current system configuration registration, or initialization, click on "×" on the upper right corner. As the process continues after the dialog box is closed, if you attempt to perform other operation, the same message will be displayed again. The message is also displayed again if you click on ④ "Check" in the screen example.

(5) Power off

③ If you click on "Power off", the message shown below will be displayed.

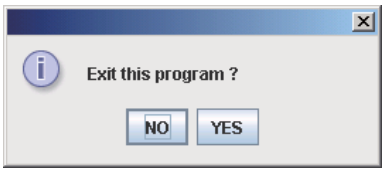

If you click on "YES", the system is preparing for safely shutting down the Web Interface main unit. Never turn off the Web Interface main unit while the following message is displayed:

Make sure that the following message is displayed then set the Power switch of the Web Interface to OFF.

After this message is displayed, to log in again, the Power switch of the Web Interface must be set to ON again.

(6) Check button

④ When you click on the "Check" button while this button is valid, the current process of the Web Interface will be displayed.

10 Supplementary Information

■ Note on powering the system down

Always use the following procedure to power the Web Interface off:

Click on Power off on the "Other settings" screen.

⇩

When "Exit this program ?" is displayed, click on OK,

⇩

Wait until a message appears to inform you that "It is now safe to turn off the unit."* then power the system down.

(*It may take several minutes until this message appears.)

■ Only an alarm code is displayed to notify of alarm content of air conditioners.

The content of an alarm can vary for different models, even if the alarm code is the same. Refer to the documentation of the various models to determine the content of the alarm.

■ If errors occurred because of lightning or electromagnetic interference

Turn the Web Interface off then back on again.

(See "Note on powering the system down" above.)

As a rule, the Web Interface should be powered down only in cases such as the above.

Correct management of air conditioners is not possible when the Web Interface is powered down.

■ Note on setting the current date and time

The current date and time should be set on a regular basis, since the system clock can gain or lose up to about two minutes per month (at 25℃).

■ You cannot perform Web operations from the PC while the Web Interface is undergoing the processes described below. Wait until that process is completed, following the instructions displayed on the screen.

- During startup (after turning the Web Interface on)
- During a system configuration check
- During initialization
- During the power-down process
- 23:30–0:05 daily

■ When only one centralized control unit is installed in a system without a remote controller, if the centralized control unit is damaged, the air conditioner(s) may become inoperable, or other troubles may occur.

To avoid this problem, we recommend that you use remote controller(s) or install multiple centralized control units.

■ About passwords

Login passwords should be recorded and saved in a safe place. They should never be disclosed to third parties.

If you forget your login password, contact your dealer or service provider.

We will not be liable for any disadvantage caused by disclosure of login passwords to third parties.

10 Supplementary Information

■ About interface adaptors (optional)

You can use interface adaptors to connect equipment that can be turned on and off (fans, room air conditioners, and so on) to the Web Interface.

However, note that the following limitations apply.

For details, refer to the documentation of the equipment or contact your dealer or service provider.

▶Central control is supported for the following operations only:

- Start/stop
- Remote control prohibition (start/stop only)

Timer settings are supported, but settings other than “Start/Stop” and “Prohibit R/C” are ignored.

Remote control prohibition is possible only if reception of a prohibition signal output from the local adaptor is enabled through connection to the equipment. Even in such a case, the only operations that can be prohibited are start and stop.

▶Alarm display

Alarm details are not shown.

The “C12” code is displayed (meaning the alarm for any of the air conditioners connected with the local adaptors).

However, this is possible only when connection with a local adaptor enables transmission of the alarm signal.

▶As long as it conforms to the contact specifications of the on/off local adaptors, any type of equipment can be connected to the Web Interface. However, you should avoid connecting equipment whose operations can have grave consequences for life or property.

10 Supplementary Information

★ IMPORTANT ★

- Microsoft and Windows CE are trademarks of Microsoft Corporation in the United States and other countries.

Other products names are trademarks or registered trademarks of their respective holders, or copyrights of their respective holders.

- Duplication of all or part of the software and documentation of this product without the express consent of the holder of the rights to the above, and transfer of the software to another party, are prohibited by law.

- We shall not be liable for any loss, lost profits, or any incidental damages due to use of this product or the supplied software. We shall not be liable to any claim based on a third-party claim.

We shall not be liable for any disadvantage caused by malfunction of the equipment or software.

- The software supplied with this product may not be used on any other equipment.

- This product and the supplied software are subject to change without notice.

The contents of this manual are subject to change without notice.

- We shall not be liable for any violation of the patent rights of any third party stemming from use of information in this manual, or for violation of other rights.

11 Troubleshooting

Before requesting service, check the following items.
Do not attempt to service the Web Interface by yourself. Doing so can be dangerous.

Symptom	Cause
The Web Interface cannot detect a single indoor unit. Or it can find not all of them.	• Click on the “Chk config.” button in the “Other settings” screen.
“Page not found” or “Page not displayed” is displayed and you cannot log in. “Communication error” is displayed during Web operation.	Is the Web Interface On? Is the LAN cable connected?
Timer operation does not work.	• Is timer operation set to “Set”? If timer operation is set to “Cancel”, timer operation will not work even if a timer is selected. (*) • Are the current date and time correctly set? If the current date and time are not correctly set, operation can start at an unexpected time. (See “Date and time setting” screen.)
A screen display is not automatically updated.	The factory default for “Auto update intv.” is “Invalid”. (Check the “WEB settings” screen.)
When local remote control operation is prohibited on the Web Interface, start/ stop operation of air conditioners is disabled because of failure in the Web Interface.	• Emergency operations until our service person arrives: Power down the Web Interface and power the indoor units down then back up again. Operation with the local remote controllers will become possible. This cannot be done in a remote control-free system.
After the recovery from a power outage, the equipment did not come on automatically according to program timer settings.	• The Web Interface does not power up equipment automatically by program timer after a power outage. The setting for the next programmed time will be executed when the time arrives.

(*) When timer operation is set to “Set” or “Cancel”, the timer operation indication on the remote controller screen will be as shown below. Each time you click on “TIMER”, the setting will change from “Set” to “Cancel” or vice versa.

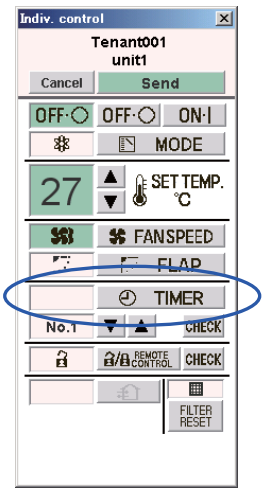

When timer is set to “Set”

When timer is set to “Cancel”

3

11 Troubleshooting

- When the Internet is used for connection of the Web Interface to the PC, take security measures, such as installing an optional firewall.
- The warning messages to be displayed during Web operations, their causes, and corrective measures are shown in the table below.

Warning message	Meaning and cause	Corrective measures
The unit is now processing, please wait. Please try later. 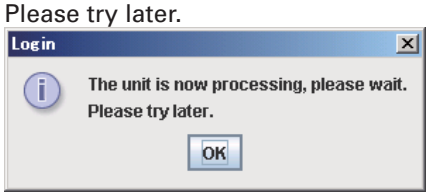	The Web Interface is in the process of setting. The access from the Web is busy.	While the Web Interface is undergoing the following processes, Web operations are not possible: • During startup (after turning the Web Interface on) • During system configuration check • During initialization • During power-off process • 23:30-0:05 daily Wait until the process is completed then try again.
Communication error	The Web Interface is not activated. (power-down, etc.) Failure in the LAN cable or LAN	Try again. Check that the Web Interface is activated. Check the LAN cable and LAN.
Invalid user ID 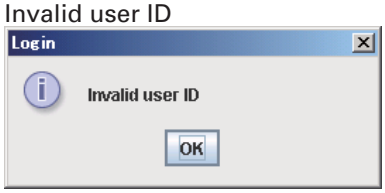	You have specified an invalid user ID for login.	Retry login using a proper user ID that has been registered in the Web Interface.
Wrong password	You have specified an invalid password for login.	Retry login using a proper password that has been registered in the Web Interface.
That user is logged in already.	An administrator user attempted to log in while another administrator user was already logged in.	Log off the administrator user who has already logged in first.

12 Care

■ **Unplug the power cord before cleaning the Web Interface.**
The system has high-voltage connectors and other dangerous components. Always power the system down and unplug the power cord before cleaning it.

■ **Use a neutral solvent.**
To clean the main unit, use a soft cloth slightly moistened with lukewarm water or a neutral solvent.
Do not use volatile agents, such as benzine and thinner, abrasives, or pesticides. Doing so can damage painted surfaces.

■ **Avoid direct contact with water.**
Do not allow water to contact the product directly.
Insulation will be impaired, which may result in damage or electrical shorts.

■ **Do not disassemble.**
Do not disassemble the Web Interface.
Doing so may damage the unit or cause electrical shock and is very dangerous.

■ **Check the mounting of components.**
Several times a year, check to make sure that the mounting of components has not been weakened by rust or corrosion.

13 Specifications

Model name		CZ-CWEBC2
External dimensions		(H)248 × (W)185 × (D)80 mm
Method of installation		Inside the control panel
Maximum number of connectable units		64 air conditioners (indoor units)
Timer precision		± Approx. 2 minutes/month (normal temperature: 25℃)
Timer	Setting unit	1 minute
	Operation	50 times/day 50 types of daily timer / 50 types of weekly timer
	Program cycle	1 week
Temperature/humidity ranges for use		5℃–40℃ / 20%–80%
Power requirements		Single-phase, 100–240 V ~, 50/60 Hz
Power consumption		Max. 17 W
Weight		2.2 kg

15. Web Interface (CZ-CWEBC2)

■ Installation (Electric) and Service Instructions

Safety Precautions

■ Before conducting installation or electrical work, be sure to carefully read these “Safety Precautions” and follow them carefully.
■ The precautions given in this manual consist of specific “Warnings” and “Cautions”. Be sure to follow these precautions, as they provide important safety related information. The labels and their meanings are as described below.

⚠ **Warning**	This refers to a hazard or unsafe procedure or practice which can result in severe personal injury or death.
⚠ **Caution**	This refers to a hazard or unsafe procedure or practice which can result in personal injury or product or property damage.

⚠ Warning

- Be sure to arrange installation at the dealer where the system was purchased or use a professional installer. Electric shock or fire may result if an inexperienced person performs any installation or wiring procedures incorrectly.
- Carefully follow these Installation (Electric) and Service Instructions when installing the unit. Electric shock or fire may result if the unit is not installed correctly.
- Electrical installation should be performed by qualified electrician, in accordance with the provisions of the Technical Standards for Electrical Installations, local regulations for indoor wiring, and these Installation (Electric) and Service Instructions. Be sure to use a dedicated electrical circuit. Insufficient electrical circuit capacity may result in electric shock or fire.
- Use the specified cables for the electrical connections, and connect the cables securely. Fasten the cables securely so that the cables will not exert force on the connection terminals. Insecure connections or fastening may result in overheating or fire.
- The installation location requires the use of a circuit breaker. Failure to use a circuit breaker may result in electric shock or fire.
- Circuit breaker must be incorporated in the fixed wiring in accordance with the wiring regulations. The circuit breaker must be an approved 10-16 A, having a contact separation in all poles.
- Install this unit to the location where general users cannot easily access (such as inside the control box).

⚠ Caution

- When performing electrical installation, discharge any accumulated static electricity to ground before touching the unit.
- Always use the system together with a remote controller or a system controller.

Supplied parts

Part number	Part name	Quantity	Part number	Part name	Quantity
①	Small pan head bolt (M4 x 10)	4	②	Nut(M4)	4
③	Flat washer	4	④	Cable tie	2
⑤	Operation Manual	1	⑥	This leaflet	1
⑦	Ferrite core	1	⑧	Cable tie (for fixing a ferrite core)	1

Specifications

Rated voltage·····100 - 240 V～, single phase
Rated frequency ····· 50/60 Hz
Power consumption ·····17 W max.
Operating temperature ·····5 to 40° C
Operating humidity ·····20 to 80% (non-condensing)

3

15. Web Interface (CZ-CWEBC2)

1 Cautions regarding the design of the control box

External dimensions

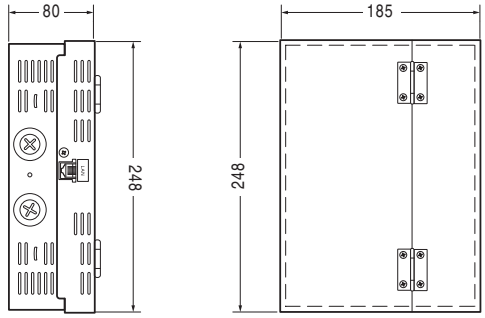

Control box machining diagram

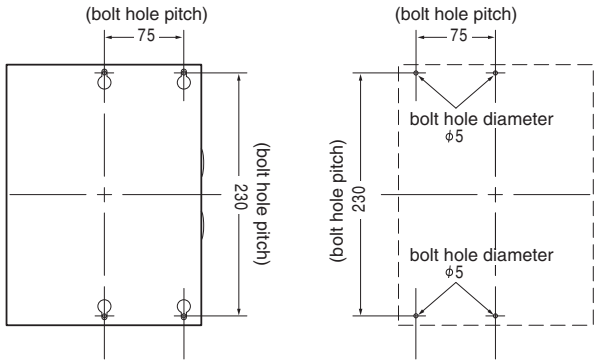

* It is possible to install the unit upside down.

Take the following into consideration when designing the control box:

(1) To ensure sufficient airflow for cooling, provide air vents (holes, slots, etc.) on the upper, lower, left and right sides of the box, as shown in the figure below. (Be sure not to clog the ventilation hole when setting.)Ensure that the temperature inside the control box does not exceed 40°C.

(2) Keep the power and communications signal lines as far apart as possible (at least 50 mm, if cabled inside the control box) to reduce the effects of electrical noise.

Control box example

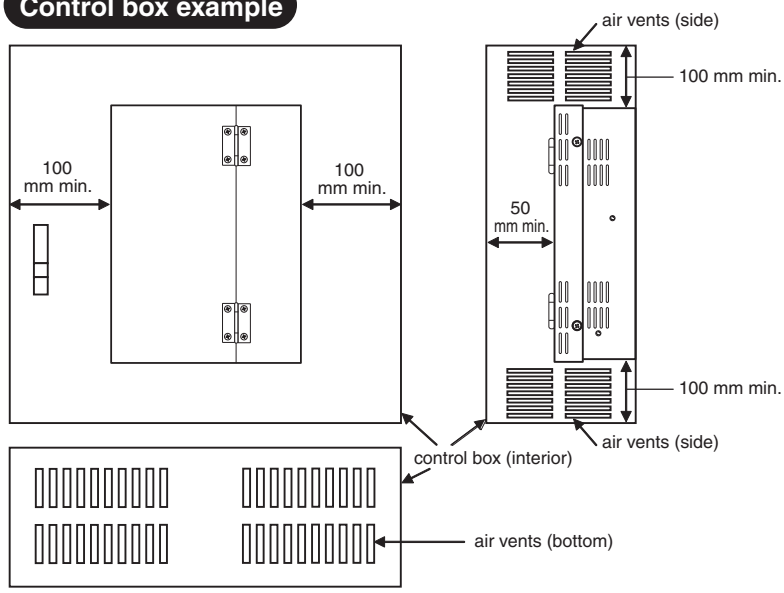

Wiring example

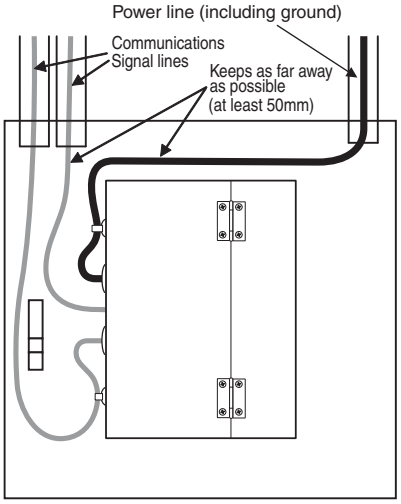

2 Mounting

Caution

- Mount the unit far away from potential noise sources.
- Do not mount the unit where it could get wet, or in areas of high humidity.
- Do not mount the unit where it could be subject to excessive vibration or shocks.
- Mount the unit inside a control box.

(1) Remove the tapping screw at the side of the LAN connector and open the lid.

(2) Mount the controller unit to the control box using the four supplied bolts, washers, and nuts.

(3) Replace the lid, and secure it with the tapping screw.

Mounting diagram

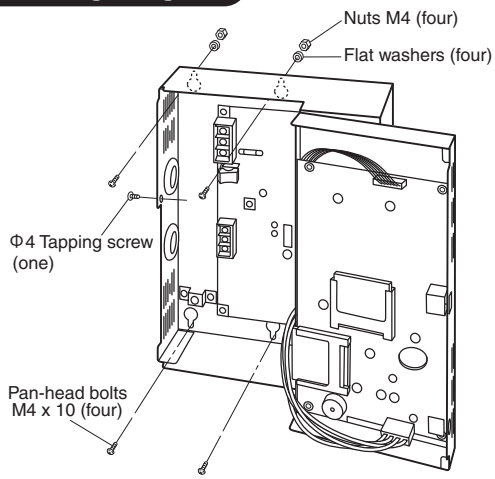

15. Web Interface (CZ-CWEBC2)

3 Wiring

Always shut off the power supply (breaker) before installing or uninstalling.

Connection terminals

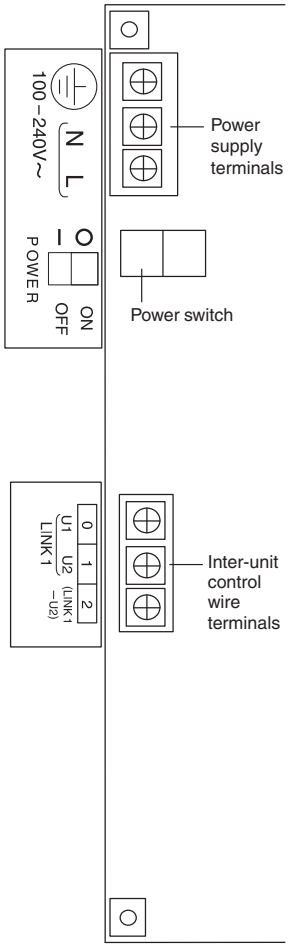

(1) Power supply connection

Connect the power supply to the commercial power mains (100 to 240 V AC), using a dedicated circuit. Connect the power supply lines to the L and N power supply terminals (the power supply neutral to the N terminal).
Connect an earth ground line to the power supply terminal.
Firmly secure the power lines using the supplied cable tie.

(2) Signal connection

- Do not run signal lines through the same conduit as power supply lines, use the same cable as the power supply, or run close to the power supply lines (maintain at least 30 cm separation, if cabled outside the control box).
- Do not run the LINK1 and LAN signal lines through the same conduit, or run the signal lines close together.
- Connect indoor and outdoor signals using 0.5 - 2.0 mm² two-conductor cable.
  Overall length of each signal line should be 1 km or less.
  Secure the shielded cable to the metal plate with a screw, as illustrated (apply one-line grounding).
- Use LAN cables of Category 5 or higher.
- Be sure to attach the supplied ferrite core at one end of the LAN cable (Web Interface side). Use a cable tie to make sure the ferrite core stays in place.

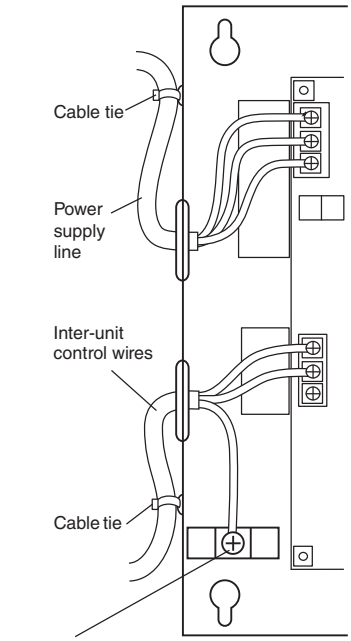

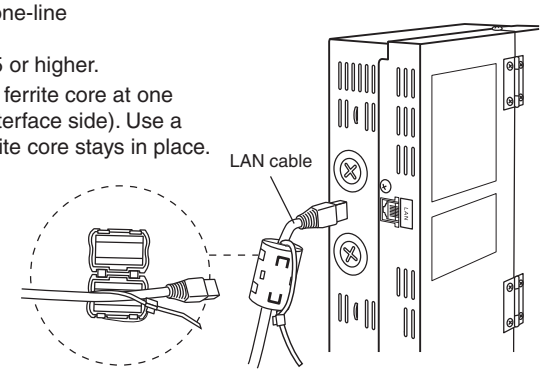

Basic wiring diagram

Wire up the Indoor/outdoor control wire as shown in the figure below.

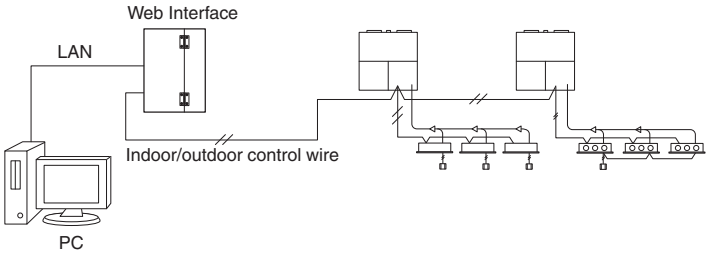

Wiring procedure

- Inter-unit control wire (no polarity)
  Use the shielded wire for inter-unit control wiring.
  Connect signal terminals 0 and 1 (LINK1) to the Inter-unti control wire terminals of an indoor or outdoor unit.
  Make sure that power lines are not connected to the Inter-unit control wire terminals.

* If the power voltage is accidentally applied to the Inter-unit control wire terminals, the fuse will go out to protect the board, but not in some cases.If this happens, disconnect the power line, and connect the Inter-unit control wire to the spare U2 terminal. (The other signal line can stay connected to the U1 terminal.) The spare U2 terminals are right next to the main U2 terminals.
Use terminal 2 (LINK1-U2) instead of terminal 1

- LAN cable
  Connect the LAN cable directly to the PC or to the network hub.

4 System power off procedure

(1) Press and hold DOWN swich for more than 4 seconds.
The 7-segment LED indication appears as below.

d-SAVE

Wait several minutes.
The 7-segment LED indication appears as below.

P-oFF

(2) Turn the power switch off.

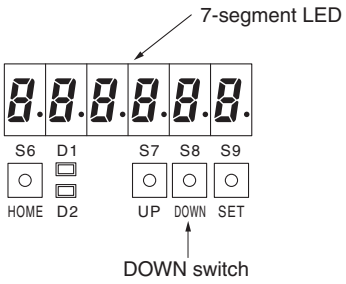

5 Verify the system configuration, make necessary settings

(1) Turn on power to all air conditioner units.
(2) Turn on power to the unit.
(3) Set the date and time on the unit and verify the system configuration.
(4) Verify the number of units connected.
(5) Perform the necessary settings.**Be sure to set the central control address.**
* See the Operation Manual for details.

6 Educating the customer

- Give the Operation Manual to the customer.
- Explain the operation to the customer, following the explanations given in the Operation Manual.

Operation Manual

Air Conditioning
Intelligent Management System

CZ-CSWKC2

Basic Software

P-AIMS

Thank you for purchasing our monitoring and control system.
Before using the system, be sure to read this manual carefully. After reading it, store it, in a convenient location for easy reference.

Contents

Precautions on Using This Product i
1. Features of the System 1
2. Startup and exit 2
3. Quick Reference 3
4. Using the System 4
5. Supplementary Information 82
6. License Certification 85
7. Basic Software Installation 88
8. Troubleshooting 91
9. Afterservice 92

Operation Manual

Air Conditioning
Intelligent Management System

CZ-CSWKC2
Basic Software

Contents

Precautions on Using This Product i

1. Features of the System 1
1-1. Introduction 1
1-2. System Features 1

2. Startup and exit 2
2-1. Startup 2
2-2. Exit 2

3. Quick Reference 3

4. Using the System 4
4-1. Common Items 4
4-1-1. The Menu Bar 4
4-2. Warning information display list box 7
4-3. Calendar 7
4-4. Password 8
4-5. Procedure 8
4-6. Print 9
4-6-1. Print screen 9
4-6-2. Excel output 9
4-6-3. Settings for automatic Excel output 10
4-6-3-1. Settings for saving the Operation/status log 10
4-6-3-2. Settings for saving the alarm log 11
4-6-3-3. Changing the folder in which CSV files are created for automatic Excel output 11
4-6-3-4. Registering settings 11
4-6-3-5. Deleting settings 11
4-6-3-6. Deleting 11
4-6-3-7. Troubleshooting if saving does not work 12
4-7. Status/Operation 13
4-7-1. Display method 14
4-7-1-1. Selecting displayed floor and area 14
4-7-1-2. Displaying alarms 14
4-7-1-3. Displaying sub units 15
4-7-1-4. Sorting lists 15
4-7-2. Start and stop control method 15
4-7-2-1. Indoor unit selection method 15
4-7-2-2. Start and stop operation method (for each indoor unit) 16
4-7-2-2-1. On/Off 16
4-7-2-2-2. Mode switch 16
4-7-2-2-3. Fan speed switch 17
4-7-2-2-4. Swing/Flap 17
4-7-2-2-5. Prohibition switch 17
4-7-2-2-6. Temperature setting 17
4-7-2-2-7. Transmit 18
4-7-2-2-8. Deleting 18
4-7-2-3. On and Off operation method (Each group) 18
4-8. Filter/Indoor Unit Information 19
4-8-1. Display method 21
4-8-1-1. Selecting displayed floor and area 21
4-8-1-2. Sorting lists 21
4-8-2. Control method 21
4-8-2-1. Indoor unit selection method 21
4-8-2-2. Clearing filter signs 22
4-8-2-3. Clearing operation time 22
4-8-2-4. Canceling and setting demand 23
4-9. Outdoor unit information 24
4-9-1. Display 25
4-9-1-1. Oil check sign 25
4-9-1-2. Power output 25
4-9-2. Demand setting 26
4-9-2-1. Outdoor unit selection 26
4-9-2-2. Setting demand values 26
4-10. Control/Status Change History 27
4-10-1. Display method 28
4-10-1-1. Displaying control history 28
4-10-1-2. Displaying status change history 28
4-10-1-3. Display time range specification method 28
4-10-2. Printing 30
4-10-2-1. Excel output 30
4-11. Alarm list & alarm log 31
4-11-1. Alarm list 31
4-11-1-1. Display method 31
4-11-1-2. Excel output 32
4-11-2. Alarm log 33
4-11-2-1. Display method 34
4-11-2-2. Refining the displayed data 34
4-11-2-3. Display range term specification method 34
4-11-2-4. Alarm confirmation 35
4-11-2-5. Print screen 36
4-11-2-6. Excel output 36
4-11-2-7. Settings for automatic Excel output 36
4-12. Schedule/Results 37
4-12-1. Display method 38
4-12-1-1. Selecting displayed floor and area 38
4-12-1-2. Sort lists 38
4-12-1-3. Display time range specification method 38
4-12-2. Detailed display of schedule time 39
4-13. Mode setting (calendar) 40
4-13-1. Display method 40
4-13-1-1. Calendar display 40
4-13-2. Calendar operation 40
4-13-2-1. Registering holidays on the calendar 40
4-13-3. Registering mode settings 41
4-13-3-1. Registering modes to the calendar 41
4-13-3-2. Deleting modes from the calendar 41
4-13-3-3. Registering an edited calendar 42
4-13-3-4. Registering in day-of-the-week units 42
4-13-4. Mode comment operation 43
4-13-4-1. Registering mode comments 43
4-13-5. Change confirmation 43
4-14. Schedule Operation Time Setting 44
4-14-1. Registering schedule times 45
4-14-1-1. Mode selection 45
4-14-1-2. Setting schedule times 46

16. Intelligent Management System

4-14-1-3. Confirming schedule time settings 47
4-14-2. Edit function 47
4-14-2-1. Editing schedule times 47
4-14-3. Saving changed data 48
4-14-4. Change confirmation 48
4-15. Schedule Changes 49
4-15-1. Display method 50
4-15-2. Registering schedule times 51
4-15-2-1. Setting schedule times 51
4-15-2-2. Confirming schedule time settings 52
4-15-3. Edit function 52
4-15-3-1. Editing schedule times 52
4-15-4. Saving changed data 53
4-15-5. Change confirmation 53
4-16. Register Maintenance Information 54
4-16-1. Display method 55
4-16-1-1. Selecting displayed floor and area 55
4-16-2. Maintenance settings 55
4-16-2-1. Maintenance settings 55
4-16-2-2. Cancel maintenance 55
4-16-2-3. Registering changed data 55
4-16-2-4. Deleting settings 55
4-16-3. Change confirmation 55
4-17. Floor Name Registration 56
4-17-1. Display method 57
4-17-1-1. Confirmation of indoor units included in each floor 57
4-17-2. Floor registration 57
4-17-2-1. Changing floor names 57
4-17-2-2. Enable/disable settings 57
4-17-2-3 Level setting 57
4-17-2-4. Main No. setting 57
4-17-2-5. Registering changed data 58
4-17-2-6. Deleting settings 58
4-17-3. Change confirmation 58
4-18. Register control group name 59
4-18-1. Display method 60
4-18-1-1. Confirmation of indoor units included in control group 60
4-18-2. Registering control groups 60
4-18-2-1. Changing control group names 60
4-18-2-2. Enable/disable settings 60
4-18-2-3. Registering changed data 60
4-18-2-4. Deleting settings 60
4-18-3. Change confirmation 60
4-19. Register Schedule Group Names 61
4-19-1. Display method 62
4-19-1-1. Confirmation of indoor units included in each schedule group 62
4-19-2. Registering schedule groups 62
4-19-2-1. Changing schedule group names 62
4-19-2-2. Enable/disable settings 62
4-19-2-3. Registering changed data 62
4-19-2-4. Deleting settings 62
4-19-3. Change confirmation 62
4-20. Register operator information 63
4-20-1. Registering operators 63
4-20-1-1. Changing operator names 63
4-20-1-2. Enable/disable settings 63
4-20-1-3. Registering changed data 64
4-20-1-4. Deleting settings 64
4-20-2. Change confirmation 64
4-21. R/C prohibition settings 65
4-21-1. Control method 66
4-21-1-1. Changing prohibition settings (affects prohibit 1 – 4) 66
4-21-1-2. Initializing prohibition settings 66
4-21-1-3. Registering settings 66
4-21-1-4. Deleting settings 66
4-21-1-5. Close the screen 66
4-22. Clock setting 67
4-22-1. Clock setting method 67
4-22-2. Setting 67
4-23. Data backup and restoration 68
4-23-1. Data backup 68
4-23-1-1. Starting data backup 68
4-23-1-2. Deleting 69
4-23-1-3. Changing the save destination 69
4-23-2. Data restoration 69
4-23-2-1. Start data restoration 70
4-23-2-1-1. Starting data restoration 70
4-23-2-1-2. Canceling data restoration 70
4-23-2-1-3. Re-specifying the data restoration file 70
4-23-3. Canceling data restoration 71
4-23-3-1. Starting cancellation of data restoration 71
4-23-4. Automatic backup settings 72
4-23-4-1. Enable/disable automatic backup 72
4-23-4-2. Setting the maximum storage term 73
4-23-4-3. Changing the backup creation folder 73
4-23-4-4. Registering settings 73
4-23-4-5. Deleting settings 73
4-23-4-6. Deleting 73
4-23-4-7. Troubleshooting if saving does not work 74
4-24. Register Event 75
4-24-1. Display method 75
4-24-1-1. Event group display 75
4-24-2. Registering event groups 76
4-24-2-1. Changing event group names 76
4-24-2-2. Changing the input point 76
4-24-2-3. Changing status 76
4-24-2-4. Changing the output point 76
4-24-2-5. Changing output 76
4-24-2-6. Setting judgment conditions 77
4-24-2-7. Changing output delay time 77
4-24-2-8. Registering changed data 77
4-24-2-9. Deleting settings 77
4-24-3. Change confirmation 77
4-25. Register I/D unit upper/low-limit temperature 78
4-25-1. Display method 79
4-25-1-1. Selecting displayed floor and area 79
4-25-1-2. Sorting lists 79
4-25-2. Control method 79
4-25-2-1. Indoor unit selection method 79
4-25-2-2. Setting upper and lower limit temperatures 80
4-25-2-3. Enable/disable settings 80
4-25-3. Saving changed data 80
4-25-4. Change confirmation 80
4-26. Exit 81

16. Intelligent Management System

5. Supplementary Information 82
6. License Certification 85
7. Basic Software Installation 88
8. Troubleshooting 91
9. Afterservice 92

Note

16. Intelligent Management System

■ Precautions on Using This Product

★IMPORTANT★

- Before you can use the P-AIMS system, you need to first perform a work procedure called "license certification."
  Please perform the license certification referring to "6.License certification".
- Duplication of all or part of this software and documentation without the express consent of the holder of the rights to the above, and transfer of the software to another party, are prohibited by law.
- This software and manual are not to be reproduced, in whole or in part, without permission.
- In principle, each set of this software is purchased for use on a single computer.
- Please note that we bear no responsibility for any effects resulting from the use of this software and manual.
  Panasonic will not be liable for any claim based on errors in calculations of distribution ratios and utility usage caused by faults in this equipment or software.
- The specifications of this software, and the content of this manual, are subject to change without notice, for the sake of improvement.
- This software is used to calculate distribution ratios and charges according to the load ratios estimated for each indoor unit.
  It is not based on the Measurement Act, so it cannot be used for public transactions and similar purposes.
- The content of this manual is limited to explanation of how to use this software.
  It does not cover the usage methods for the operated machinery and optional features, or for the OS etc., so refer also to the relevant manuals for those elements.
- The screen image examples presented in this manual are intended to illustrate the explanation of layouts, and do not represent actual operating conditions. The tenant names displayed are also fictional.
- Displays and operations may differ from the examples in this manual, depending on versions of Excel and the OS used.
- Refer to "Please Read Before Use" for the warranty terms for this software.
- Panasonic will not be liable for any violation of the rights of any third party stemming from use of information in this manual, or for violation of other rights.
- Microsoft, Windows XP and Microsoft Excel are trademarks of Microsoft Corporation in the United States and other countries.
  Other product names are trademarks or registered trademarks of the corresponding companies.
  Other products are copyrights of the corresponding companies.

1. Features of the System

1-1. Introduction

This Air Conditioning Intelligent Management System (P-AIMS System) is Panasonic Corporation's personal computer (PC) software for the centralized control of air conditioning equipment.
Compatible equipment models are:
Electric package air conditioners (PAC)
Gas heat pump (GHP) air conditioners

1-2. System Features

•Connectable units	1,024 indoor 960 outdoor
•Operation functions	Start/ stop, temperature settings, operation mode switching, airflow direction settings, etc.
•Operation monitor	Layout display (requires layout display software, sold separately) Unified monitoring of operation status (start/stop, operation mode, alarm) Alarm log display, status change history display Filter cleaning signs, engine oil check sign
•Program timer	20 daily times can be set for each group (30 types)
•Air conditioning energy distribution	Cumulative operation time for each indoor unit, and total operation count Calculation of distribution ratios and usage quantities (m^3, kWh) for air conditioning consumption of gas and electricity by each indoor unit and each tenant Time zone distribution function (within hours, after hours, special days) Processes performed on cut-off days can be changed at any time (within a year) (separate charge calculation software is required)

2. Startup and exit

2-1. Startup

1. Double click on the P-AIMS shortcut on the desktop.

The following window appears:

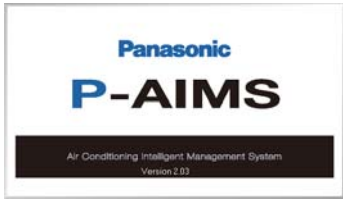

The system starts up and the Status/Operation screen is displayed.

2-2. Exit

1. From the Menu bar, select "Maintenance" - "Exit".

2. The Password Input screen is displayed. Input the password.

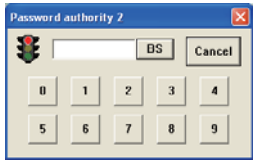

3. The System Exit screen is displayed. Click on the Yes button.

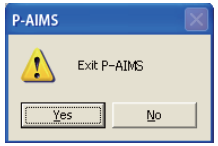

3. Quick Reference

Menu List

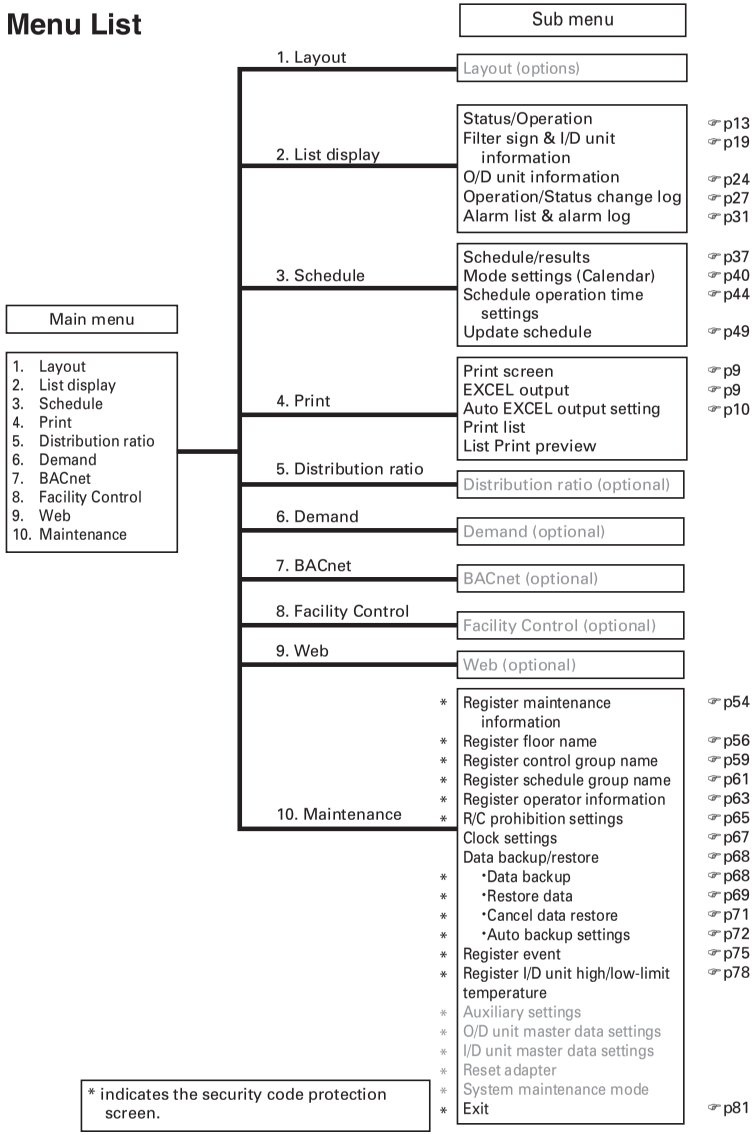

4. Using the System

4-1. Common Items

The common display area is at the top of the screen, and is always displayed, regardless of which operation screen is used. Any current alarms and the date and time are also displayed. The menu bar can be used to move between screens.

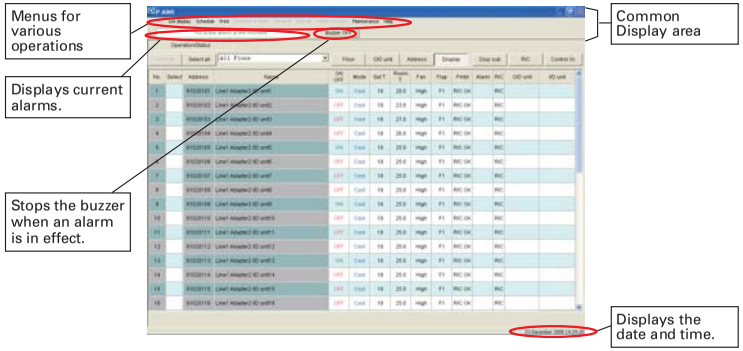

4-1-1. The Menu Bar

- Layout ..... Display the layout. (Optional)
- List display..... Display the various list screens.
  - Status/Operation ..... Monitor air conditioner status and alarms, and perform start and stop operations etc.
  - Filter sign & I/D unit information..... Check duration and times of indoor unit operation and reset filter alarms.
  - O/D unit information ..... Check duration and times of outdoor unit operation and make power demand settings.
  - Operation/Status change log ..... Display a log of air conditioner starts and stops, and change operation status.
  - Alarm list & alarm log..... Display a log of air conditioner alarms and restoration status.

- Schedule ..... Display the Schedule setting screen.
  - Schedule/results ..... Monitor air conditioner status and alarms, and perform start and stop operations etc.
  - Mode settings (Calendar) ..... Set the scheduled operation mode to calendar.
  - Schedule operation time settings ..... Set the scheduled operation times for each mode.
  - Update schedule..... Check and change scheduled operating times for the same day, next day and day after that.
- Print ..... Print data from the screen.
  - Print screen ..... Print the displayed screen.
  - EXCEL output..... Export the print image to a CSV file that can be loaded by Microsoft Excel.
  - Auto EXCEL output setting ..... Make settings for automatically outputting the specified data to CSV files that can be loaded by Microsoft Excel.
  - Print list ..... Print the distribution table. (Optional)
  - List print preview..... Display and print the preview screen for the distribution table. (Optional)
- Distribution ratio ..... Calculate distribution. (Optional)
- Demand..... Control demand. (Optional)
- BACnet ..... Perform BACnet communications. (Optional)
- Facility Control ..... Control devices other than the air conditioners. (Optional)
- Web ..... Provide a web browser. (Optional)
- Maintenance..... Display the Maintenance screen.
  - Register maintenance information ..... Register and cancel indoor unit maintenance.
  - Register floor name..... Register floor names.
  - Register control group name..... Register control group names.
  - Register schedule group name..... Register schedule group names.
  - Register operator information ..... Register names of operators responsible for checking alarms.
  - R/C prohibition settings ..... Set central control patterns for use with the remote control unit.
  - Clock settings..... Set the system time.
  - Data backup/restore ..... Backup and restore data.
    - Data backup..... Make backups of data.
    - Restore data ..... Restore back-up data.
    - Cancel data restore..... Delete data backups.
    - Auto backup settings..... Set how backups are made automatically.

Register event.....Register conditions for linked control.
Register I/D unit high/low-limit temperature.....Register conditions for the upper and lower temperature limits for the indoor unit
Auxiliary settings.....Make adapter connection line settings, system password settings, etc.
O/D unit master data settings.....Register outdoor units to monitor.
I/D unit master data settings.....Register indoor units to monitor.
Reset adapter .....Specify the connection line and reset the adapter.
System maintenance mode .....Display the system maintenance mode.
Exit.....Exit the system.

- Help ..... Display the Help screen.
  Basic software manual.....Display the basic software manual.
  Layout display software manual .....Display the layout display software manual. (Optional)
  Distribution ratio software manual.....Display the Accounting software manual. (Optional)
  Demand software manual .....Display the demand control software manual. (Optional)
  BACnet software manual...Display the BACnet control software manual. (Optional)
  Facility control software manual.....Display the facility control software manual. (Optional)
  WEB software manual.....Display the WEB software manual. (Optional)
  Select Language.....The selected language is displayed.
  Version information .....Display version information.

4-2. Warning information display list box

When an alarm is issued in connection with a monitored device, the name of the alarm device is displayed in the list box in the upper left of the screen, where it flickers in red. Click on the button on the right side of the list box to display the list of current alarms. If there are many alarms in effect, an additional scroll bar is displayed on the right side of the list display screen. Devices which have been restored from their alarms are automatically removed from the list.
A buzzer also sounds when an alarm occurs, but it can be stopped by clicking on the Buzzer OFF button.

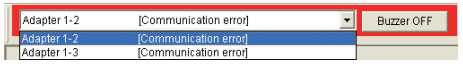

4-3. Calendar

Click on the button on the right side of the date display column, when specifying time periods on any screen, to display the calendar screen.
Click on the calendar to select the dates of displayed history items.

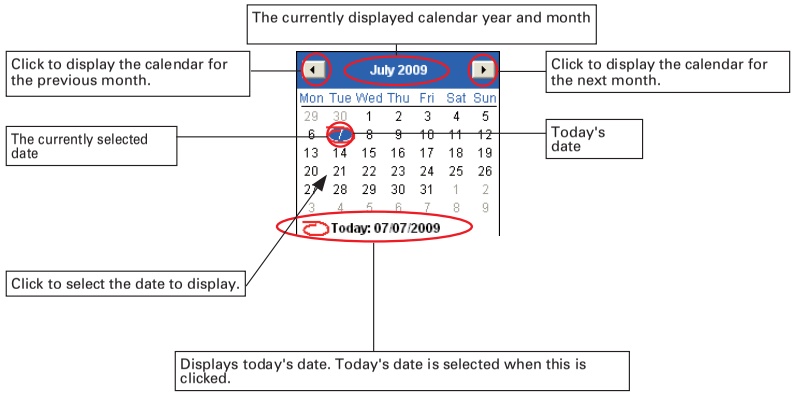

4-4. Password

This password screen is displayed if users are restricted, in order to restrict access to screens such as the Maintenance screen which are not used by general users, and to prevent operation errors. The password level required for the current input is displayed at the top of the Password screen. Input a password of a level that meets the level requirement.
Click on the numerical buttons at the bottom to input the correct password. When a correct password is input, the restriction is lifted and the displays and devices on the screen become operable. Restrictions are also lifted if the input password is of a level surpassing that which is displayed.

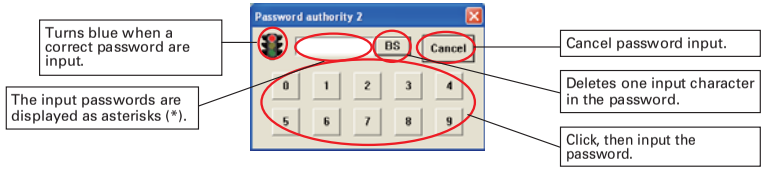

* There are three levels of password, as follows:
Level 1: It is possible to operate and change the names of password-protected devices.
Level 2: Operations such as system settings and shutdown are possible.
Level 3: All operations, including system maintenance, are possible.

4-5. Procedure

If [Procedure] is displayed, the procedure for accessing that item is presented.
For example,

[Procedure]
On the menu bar, select "Print" – "Auto EXCEL output setting".
(Password level 1)

when the above is displayed, clicking on Print on the main menu displays the sub-menu.
Click on "Auto EXCEL output setting" in the sub-menu to switch the screen display to that item.
If there is a <Password Level 1> display, the Password screen (Level 1) is displayed, so the screen switches after a suitable password is input.

4-6. Print

4-6-1. Print screen

[Procedure]
On the menu bar, select "Print" – "Print screen".

Print the currently-displayed screen.
* This menu cannot be selected on screens that cannot be printed.

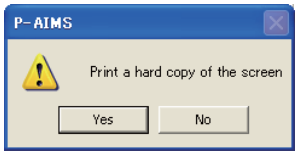

Click on the Yes button to print the screen.
Click on the No button to exit without printing.

4-6-2. Excel output

[Procedure]
On the menu bar, select "Print" – "Excel output".

Currently displayed data can be saved as a file in CSV format, which can be displayed by Microsoft Excel and similar applications. The data currently displayed on the screen becomes the file, so make sure the data to place in the file is displayed on the screen.

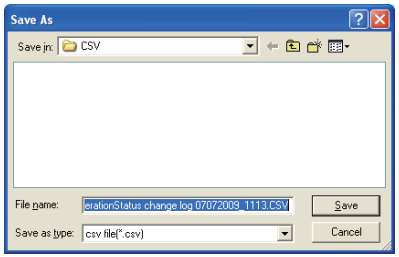

The file name is assigned automatically.

OperationStatus change log 07072009 _ 1113.CSV
Name DDMMYYYY hhmm *This file is for when the "Operation/Status change log" is used.

Click on the Save button to save the file to the folder specified under "Save in:".
Click on the Cancel button to exit without saving.

* Unless a different save folder has been specified, the saved file is saved to the folder named Auto_CSV in the folder to which the P-AIMS system was installed (e.g. C:\P-AIMS).

4-6-3. Settings for automatic Excel output

[Procedure]
On the menu bar, select "Print" – "Auto EXCEL output setting".
(Password level 1)

"Operation/Status change log" and "Alarm log" can be saved automatically, every day, in CSV format, which can be displayed on Microsoft Excel. The timing of data saving is past midnight, so the data up to the previous day can be checked.

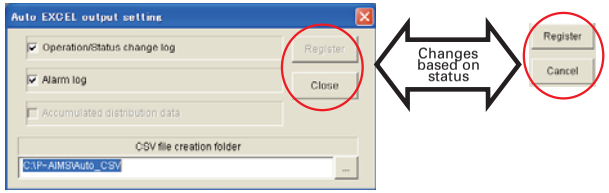

Operation/Status change log	:Specify the file to save the Operation/Status change log to.
Alarm log	:Specify the file to save the Alarm log to.
Accumulated distribution data	:Specify the file to save Distribution ratio-related data (Optional) to. This cannot be specified with the basic software.
Register	:Registers the set content.
Cancel	:Reverts to the previously registered content.
Close	:Closes the window.
...	:Changes the backup creation folder.

4-6-3-1. Settings for saving the Operation/status log

To automatically save the "Operation/Status change log" file, click on Operation/Status change log, and add the check mark. Saving is enabled with the check mark is added.

Click again to remove the check mark.

The file name is assigned automatically. (Files are saved in one-day units).

OperationStatus change log 07072009 _ 1.CSV

Name DDMMYYYY serial number

(*The serial number increments to "2" when there are over 60,000 files with the serial number "1". Up to 400,000 files can be saved per day).

4-6-3-2. Settings for saving the alarm log

To automatically save the alarm log file, click on Alarm log, and add the check mark. Saving is enabled with the check mark is added. Click again to remove the check mark.

The file name is assigned automatically. (Files are saved in one-month units).

Alarm log 082006.CSV

Name MMYYYY

4-6-3-3. Changing the folder in which CSV files are created for automatic Excel output

Click on the ... button to display the Browse Folder screen, which can be used to change the folder in which files are saved.

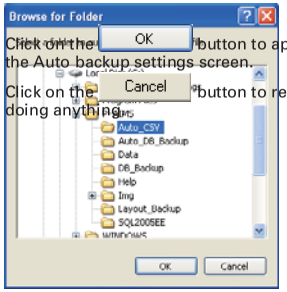

Click on the OK button to apply the selected save destination and return to the Auto backup settings screen.

Click on the Cancel button to return to the Auto backup settings screen without doing anything.

4-6-3-4. Registering settings

Click on the Register button to register the set content.

4-6-3-5. Deleting settings

Click on the Cancel button to delete the set content and revert to the previously registered content.

4-6-3-6. Deleting

Click on the Close button to close the Auto backup settings screen.

* The Cancel and Close buttons change to the Cancel button when settings are made.
  Clicking on the Register or Cancel buttons changes them to the Close button.
* Unless a different save folder has been specified, automatic backup files are saved to the folder named Auto_DB_Backup in the folder where the P-AIMS system was installed (e.g. C:\P-AIMS).

4-6-3-7. Troubleshooting if saving does not work

If an error occurs while the backup file is being saved, a red button marked "Auto Backup, Auto CSV ERR" is displayed in the upper right of the screen.

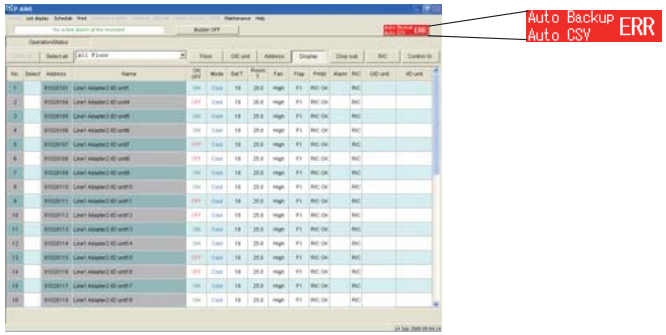

Click on the Auto Backup Auto CSV ERR button to display the "Error log of Auto_DB_Backup & Auto_CSV_Backup" screen and the content of the error.

The Auto Backup Auto CSV ERR button disappears at the same time as the error is closed.

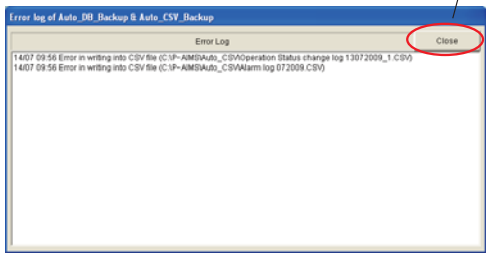

* If this button is displayed, an error may have occurred on the storage disk. Refer to the instruction manual for the device concerned and take appropriate action.

4-7. Status/Operation

[Procedure]
On the menu bar, select "List display" – "Status/Operation".

Monitor the status of indoor units here. The operation, mode, set temperatures, room temperatures, fan speeds, flaps, central control, alarms, presence of remote control units, outdoor units and indoor units can be monitored. Devices can also be controlled to start and stop.
Indoor units can be monitored and controlled in floor and area units, and each control group can be controlled.

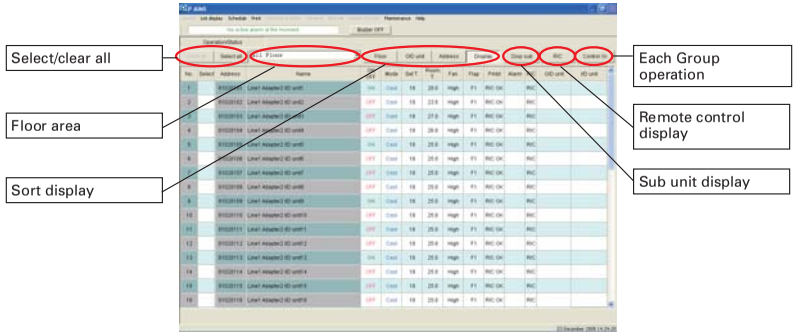

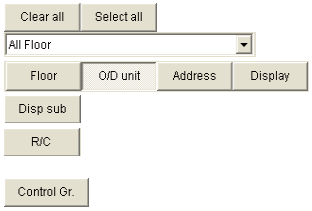

:Use to clear all and select all.
:Use to select floor areas.
:Use to select the display order.
:Sub units are also displayed.
:Use remote control units for individual control to stop and start indoor units individually.
:Use group control remote control units to stop and start control group units.

Key

- · Select :Selects the indoor unit to control. Click to add a check mark.
- · Address :Display the address numbers of indoor units.
- · Name :Displays the names of the indoor units. Normal: black, sub unit: blue, W/O connestion: red, maintenance: gray
- · ON/OFF :Monitors the operation status of indoor units. ON: Green, OFF: Red
- · Mode :Displays the operation modes of indoor units. A/Cool, A/Heat: Green, Cool: Blue, Heat: Red, Fan: Gray, Dry: Light blue

· Set T. :Displays the set temperature. The range of temperatures that can be set varies, depending on the connected air conditioner model and the operation mode.
· Room T. :Displays room temperatures.
· Fan :Displays fan speeds.
Automatic (automatic fan speed), High, Mid., Low (Displayed as - - if the model concerned cannot display this information.)
· Flap :Displays the directions of flaps.
Swing, F1 - F5 (warm, fan: F1 - F5, for cooling: F1 - F3)
Displayed as - - if the model concerned cannot display this information.
· Prhbt :Central control (local control prohibited)
Individual (no prohibition), prohibit 1=prohibit 7 (Settings can be made for various types of central control (Prohibition))
· Alarm :Displays alarm codes if an alarm has been issued by an indoor unit.
Displays Maintenance if "Register maintenance information" applies.
· R/C :Displays "Yes" for indoor units that have remote control units
· O/D unit :Displays outdoor unit codes.
· I/D unit :Displays indoor unit codes.

* If it is not possible to communicate with the adapter, or if the model used cannot display the content, the column will display "- -".
* Use the Maintenance screens to assign indoor unit points to the screen.

9		01020109	Line1 Adapter2 I/D unit9	ON	A/Cool	25	25.0	Auto	Swing	R/C OK	
10		01020110	Line1 Adapter2 I/D unit10	- -	- -	- -	- -	- -	- -	- -	

The names of indoor units which are unconnected are displayed in red. Their operating status cannot be checked.

4-7-1. Display method

4-7-1-1. Selecting displayed floor and area

First, select the floor and area.

If the floor and area is "All Floor", all registered indoor units are displayed. Click on the button on the right edge of the floor selection list to display a list of registered floors and areas. From the list, select the floor or area to monitor.

A list of indoor units registered within that floor and area is displayed.

4-7-1-2. Displaying alarms

When an alarm is issued for an indoor unit, the error code is displayed in the Alarm column.
Nothing is displayed if there are no current alarms.

Name	ON OFF	Mode	SetT	RoomT	Fan	Flap	Prhbt	Alarm	R/C
Line1 Adapter2 I/D unit1	ON	A/Cool	25	28.0	Mid.	F5	R/C OK		R/C
Line1 Adapter2 I/D unit2	OFF	A/Heat	25	25.0	Auto	Swing	R/C OK	A01	R/C

* The alarm display is automatically removed if the alarm has been restored.

4-7-1-3. Displaying sub units

Disp sub button is clicked, it changes to the pressed state (Disp sub) and sub units are also displayed. Click on the button again and it returns to its original raised state (Disp sub), so sub units are no longer displayed. Stop and start operations cannot be performed on sub units.

1		01020101	Line1 Adapter2 I/D unit1	ON	Cool	18	28.0	High	F1	R/C OK		R/C
2		01020102	Line1 Adapter2 I/D unit2	ON	Cool	18	23.5	High	F1	—		
3		01020103	Line1 Adapter2 I/D unit3	ON	Cool	18	27.0	High	F1	—		

The names of sub units are displayed in pale blue.

* Setup and operation of sub-units is linked to the main unit, so starting/stopping them or changing their settings is impossible.
* To check individual alarms from sub-units, it is necessary to display the sub-unit.

4-7-1-4. Sorting lists

Click on the Sort button to change the display order of a list. The currently pressed button is the one which determines the sort order.

Floor | O/D unit | Address | Display

Click on the buttons to change the list orders. If other buttons are pressed, the one that was clicked last is effective. The illustration above shows the list displayed in the indoor unit master order.
Floor :Display is in order of floor name registration.
O/D unit :Display is in order of outdoor unit addresses, from the most recent.
Address :Display is in order of addresses, from the most recent.
Display :Display is in order of most recent registrations to the indoor unit master.

* Any button can be selected. It is not possible to select multiple buttons at the same time.

4-7-2. Start and stop control method

4-7-2-1. Indoor unit selection method

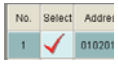

To start or stop a unit, click on the name of the indoor unit to control. The selected locations have ✓ check marks in the selection column.
Click again on the same location to remove the check mark, canceling the selection.
To select all indoor units, click on the Select all button in the upper left of the screen.
To cancel selections of all indoor units, click on the Select Clear button in the upper left of the screen. Select Clear This button cannot be used if nothing has been selected.
It is possible to select or deselect multiple indoor units by dragging around them with the mouse.
Unconnected units and sub units cannot be selected.

* After selecting the indoor unit, transmit the settings to the actual indoor unit on the Remote Control screen.

4-7-2-2. Start and stop operation method (for each indoor unit)

Click on the R/C button in the upper right of the screen when an indoor unit is selected to display the remote control unit screen. The Remote Control screen can be used to change operation, mode, temperature setting, fan speed, flap and prohibition settings. Click on the set button, then on the Transmit button to send the setting content to the unit.

Click on the ✕ button to avoid sending the settings. The Remote Control screen closes.

> * Buttons for functions that cannot be set are grayed out and cannot be selected.
> * Indoor units can be selected even after the Remote Control screen has been displayed.

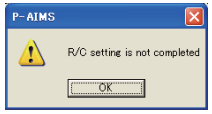

An error message is displayed if the user clicks on the Transmit button when no indoor unit is selected.

Select the indoor unit before clicking on the Transmit button.

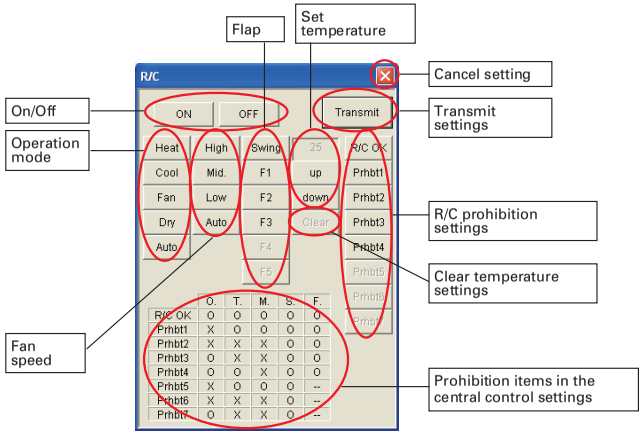

4-7-2-2-1. On/Off

When either On or Off is clicked, the selected button remains depressed.
When one button is clicked on, the other reverts to its non-depressed state.

4-7-2-2-2. Mode switch

When any button is clicked, the selected button remains depressed.
When any other mode button is clicked on, the previously selected button reverts to its non-depressed state.

> * Some modes may be unavailable, depending on the type of indoor unit.
> * Some older indoor units may be unable to provide fan operation when fan speed is set to automatic.

4-7-2-2-3. Fan speed switch

When any button is clicked, the selected button remains depressed.
When any other Fan speed button is clicked on, the previously selected button reverts to its non-depressed state.
Auto fan speed cannot be selected in fan operation.
*For some indoor unit models, it may be impossible to select "Auto" (Auto fan speed).

4-7-2-2-4. Swing/Flap

When any button is clicked, the selected button remains depressed.
When any other Flap button is clicked on, the previously selected button reverts to its non-depressed state.
*Some flap settings are unavailable, depending on the selected operation mode.

4-7-2-2-5. Prohibition switch

When any button is clicked, the selected button remains depressed.
When any other prohibition mode button is clicked on, the previously selected button reverts to its non-depressed state.
Only those set under prohibition settings can be used.

R/C OK:Operation with the remote control unit is OK.
Prhbt 1 :The remote control unit cannot be used for switching On/Off.
Prhbt 2 :The remote control unit cannot be used for switching On/Off, temperature setting and operation mode switching.
Prhbt 3 :The remote control unit cannot be used for temperature setting and operation mode switching.
Prhbt 4 :The remote control unit cannot be used for operation mode switching.
Prhbt 5 :The remote control unit cannot be used for switching On/Off.
Prhbt 6 :The remote control unit cannot be used for switching On/Off, temperature setting and operation mode switching.
Prhbt 7 :The remote control unit cannot be used for temperature setting and operation mode switching.

> * The functions for Prhbt 1–4 can be changed using the "Maintenance" – "R/C prohibition settings".
> * Prohibit 1–4 are for the CZ-CFUNC2.

4-7-2-2-6. Temperature setting

Click on the up and down buttons in the center right of the Remote Control screen to raise or lower the temperature displayed in the set temperature column.

Heat :16 - 26°C
Dry/Cool :18 - 30°C
is the available setting range. Temperature cannot be set in fan operation.
*Temperature setting ranges differ between indoor unit models.

> * Temperature setting ranges can be changed using "Maintenance" – "Register I/D unit high/low-limit temperature".

4-7-2-2-7. Transmit

Click on the [Transmit] button to transmit the set content to the indoor unit.

4-7-2-2-8. Deleting

Click on the [✕] button to stop transmission of the setting data to the indoor unit and close the Remote Control screen.

4-7-2-3. On and Off operation method (Each group)

Click on the [Control Gr.] button to display the Remote Control screen for Each Group operation.

The basic operations are the same as for the normal Remote Control screen (for individual indoor units), but a frame for selecting control groups is displayed on the top of the screen.

Select the control group to operate, then transmit the settings.

To change the control group, click on the [▼] button on the right of the control group. The registered control groups are displayed in the list.

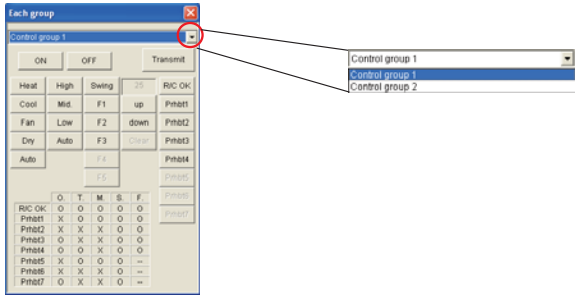

Select by clicking on the group to control. Then, set the operation mode, fan speed and other items in the same way as for normal remote control unit operation, and click on the [Transmit] button. The settings are transmitted to all the indoor units in the registered group.

Click on the [✕] button to avoid sending the settings. The remote control screen closes.

> * Use the "Maintenance" – "Register Control Group Name" screen to register control group names.
> * Use the "Maintenance" – "I/D unit master data" screen to assemble control groups.
> * It is not possible to select indoor units while the Each Group Setting screen is displayed.
> Also, if the Each Group Setting screen is displayed after an indoor unit has been selected, Each Group setting operation takes priority.

When settings are transmitted for individual indoor units or for groups, but no setting items are selected on the Remote Control screen, an error message is displayed when the [Transmit] button is clicked.

Make settings on the Remote Control screen before clicking on the [Transmit] button.

4-8. Filter/Indoor Unit Information

> [Procedure]
> On the menu bar, select "List display" – "Filter sign & I/D unit Information".

The operation time, the operation count, thermometer and fan status, intake temperature and discharge temperature can be checked for each indoor unit. Devices which are showing filter signs are also shown.Filter signs can be cleared, and indoor unit demand can be set or cancelled, from this screen.

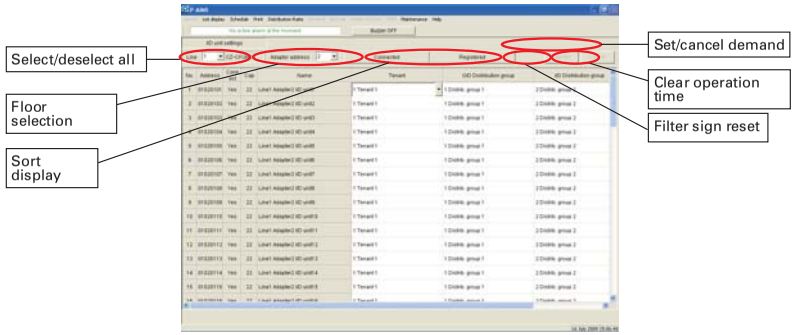

[Clear all] [Select all]	:Use to clear all and select all.
[All Floor]	:Use to select floor areas.
[Floor] [O/D unit] [Address] [Display]	:Use to select the display order.
[Demand cancel] [Demand settings]	:Use to make and cancel demand settings.
[Reset Filter sign]	:Use to clear filter signs.
[Clear OP. time]	:Use to reset the operation times of indoor units.

Key

· Select	:Selects the indoor unit to control. Click to add a check mark.
· Address	:Displays the addresses of alarms.
· Name	:Displays the names of devices which have issued alarms. Normal: black, sub unit: blue, W/O connection: red, maintenance: gray
· Filter sign	:Displays alarms related to filter replacement times. "Filter sign" is displayed in red when it is time to replace a filter.
· Operat. Time	:Displays the operation times of indoor units. (When the distribution ratio option is installed)
· Operat. Count	:Displays the number of times indoor units have operated. (When the distribution ratio option is installed)
· Demand	:Displays the demand status of indoor units.
· T/S	:Displays the thermostat status of indoor units.

· Fan :Displays the fan status of indoor units.
· Suction T :Displays the temperature of air taken into the indoor unit.
· Discharg T :Displays the temperature of air discharged from the indoor unit.

> * If it is not possible to communicate with the adapter, or if the model used cannot display the content, the columns will display "----".

The names of sub units are displayed in pale blue.

If the optional Accounting software is installed, the current operation time and operation count are displayed for the indoor unit.

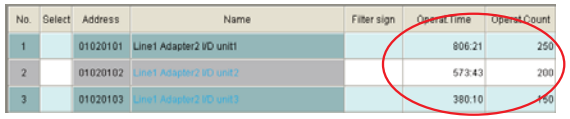

If a filter sign has been issued, the text "Filter sign" will be displayed in red in the Filter Sign column.
Nothing is displayed if there are no current filter signs.

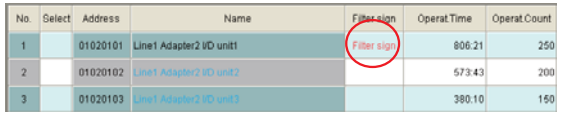

Thermostat status (displayed when On), actual fan operation status, and intake and discharge temperatures are displayed for indoor units.

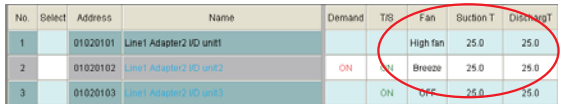

4-8-1. Display method

4-8-1-1. Selecting displayed floor and area

If the floor and area is "All Floor", all registered indoor units are displayed. Click on the button on the right edge of the floor selection list to display a list of registered floors and areas.From the list, select the floor or area to monitor. A list of indoor units registered within that floor and area is displayed.

4-8-1-2. Sorting lists

Click on one of the sort buttons to change the display order of a list. The currently pressed button is the one which determines the sort order.

Click on the buttons to change the list orders. If other buttons are pressed, the one that was clicked last is effective. The illustration above shows the list displayed in the indoor unit master order.

Floor :Display is in order of floor name registration.
O/D unit :Display is order of outdoor unit addresses, from the most recent.
Address :Display is order of addresses, from the most recent.
Display :Display is in order of most recent registrations to the indoor unit master.

> * Any button can be selected. It is not possible to select multiple buttons at the same time.

4-8-2. Control method

4-8-2-1. Indoor unit selection method

To set or cancel demand, clear filter signs or clear operation times, first click on the name of the target indoor unit. The selected locations have ✓ check marks in the selection column.

Click again on the same location to remove the check mark, canceling the selection.

To select all indoor units, click on the Select all button in the upper left of the screen.

To cancel selections of all indoor units, click on the Clear all button in the upper left of the screen. The Clear all button cannot be used if nothing has been selected.

It is possible to select or deselect multiple indoor units by dragging around them with the mouse.

Unconnected units cannot be selected.

4-8-2-2. Clearing filter signs

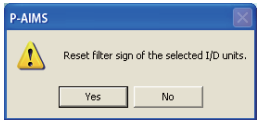

Clicking on the Reset Filter sign button in the upper right of the screen when an indoor unit is selected displays a confirmation message.

Click on the Yes button to clear the filter sign. Click on the No button to cancel the reset.

* Filter signs are displayed after the operation time of each indoor unit reaches a certain level.
* These signs can also be cleared by pressing the Filter Reset button on the remote control unit connected to the indoor unit.
* Filter signs are only an approximate guide. We recommend that you clean indoor unit filters regularly, even if no signs have been issued.

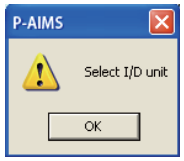

An error message is displayed if the user clicks on the Reset Filter sign button when no indoor unit is selected.

Select the indoor unit before clicking on the Reset Filter sign button.

4-8-2-3. Clearing operation time

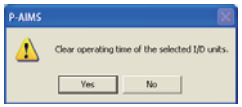

Selecting the indoor unit to clear operating time for, then clicking on the Clear OP. time button displays a confirmation message.

Click on the Yes button to reset the operation time for the indoor unit.

Click on the No button to avoid clearing operation time.

* The operation count cannot be reset.
* Resetting operation time has no effect on distribution calculations and similar operations.
* Operation time is tallied by the system, and has no relation to the adapter time.

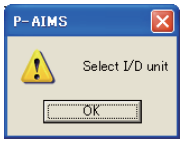

An error message is displayed if the user clicks on the Clear OP. time button when no indoor unit is selected.

Select the indoor unit before clicking on the Clear OP. time button.

4-8-2-4. Canceling and setting demand

Selecting the indoor unit to cancel demand for, then clicking on the Demand cancel button displays a confirmation message.

Click on the Yes button to clear demand for the indoor unit.

Click on the No button to avoid canceling demand.

* Even if Demand is cancelled, Thermostat On indication may not be displayed in some situations. It is determined by the operating conditions of the indoor unit.

Selecting the indoor unit to set demand for, then clicking on the Demand settings button displays a confirmation message.

Click on the Yes button to set demand for the indoor unit.

Click on the No button to avoid setting demand.

* Thermostat On indication disappears when Demand is set.

An error message is displayed if the user clicks on the Demand cancel Demand settings button when no indoor unit is selected.

Select the indoor unit before clicking on the Demand cancel Demand settings button.

4-9. Outdoor unit information

[Procedure]
On the menu bar, select "List display" – "O/D unit information".

Operation times, operation counts and oil check signs are displayed for outdoor units. Demand setting is also available for outdoor units of electric air conditioners that are capable of demand setting.

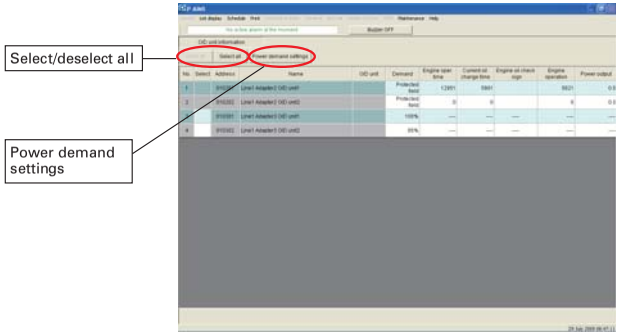

Clear all / Select all	:Use to clear all and select all.
Power demand settings	:Use for demand setting.

Key

· Select	:Selects the outdoor unit to control. Click to add a check mark.
· Address	:Displays the addresses of outdoor units.
· Name	:Displays the names of outdoor units.
· O/D unit	:Displays the codes of outdoor units.
· Demand	:Displays the operation range (EHP only).
· Engine oper. time	:Displays the engine operation times of GHP systems. (not used for EHP)
· Current oil change time	:Displays the operation times of a GHP system since its last oil change. (not used for EHP)
· Engine oil check sign	:Displays the engine oil check signs for GHP systems. (not used for EHP)
· Engine operation	:Displays the engine operation counts of GHP systems. (not used for EHP)
· Power output	:Displays the power output of high-power excel.

* In some cases, the model of adapter used for GHP systems may prevent display of engine operation time, operation time since last oil change, oil check signs, engine operation count and power generation.
* If it is not possible to communicate with the adapter, or if the model used cannot display the content, the columns will display "----".
* With electric (package) types, only demand setting is available for the outdoor unit (where setting is possible).
* For outdoor units that cannot be set for demand, the Demand column displays "Protected field".
* Consult your dealer or service provider about assignment of outdoor unit points to screens.

The names of outdoor units which are unconnected are displayed in red. Their operating status cannot be checked.

4-9-1. Display

4-9-1-1. Oil check sign

Any outdoor unit marked with an oil check sign requires an oil check.

* If an oil check sign is displayed, contact the service engineer to have the oil level of the outdoor unit checked. The oil check sign will disappear once the oil check is complete.

4-9-1-2. Power output

If a High Power Excel outdoor unit is connected, its cumulative total power output (in kWh) is displayed.

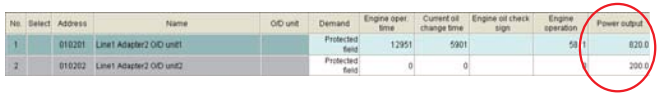

4-9-2. Demand setting

4-9-2-1. Outdoor unit selection

For outdoor units for which demand can be set (EHP units), the setting value is displayed as a percentage in the demand setting column. Click on the name of the outdoor unit to make the setting for.

The selected locations have ✓ check marks in the selection column. In GHP systems, demand cannot be set, so the selection is unavailable.

Click again on the same location to remove the check mark, canceling the selection.

To select all selectable outdoor units, click on the [Select all] button in the upper left of the screen. The [Clear all] button cannot be used if nothing has been selected.

It is possible to select or deselect multiple outdoor units by dragging around them with the mouse.

Outdoor units which are W/O connection or incapable of demand setting cannot be selected.

No.	Select	Address	Name	O/D unit	Demand	Engine oper. time
1		010201	Line1 Adapter2 O/D unit1		Protected field	12951
2		010202	Line1 Adapter2 O/D unit2		Protected field	0
3	✓	010301	Line1 Adapter3 O/D unit1		100%	----
4	✓	010302	Line1 Adapter3 O/D unit2		75%	----

Check marks cannot be placed in the selection column for outdoor units which have "Protected field" displayed in the Demand column.

4-9-2-2. Setting demand values

Selecting the outdoor unit to set, then clicking on the [Power demand settings] button displays the Power Demand Settings screen. Click on the ▼ button on the right of the frame in which Demand is displayed. The settable operation range list is displayed.

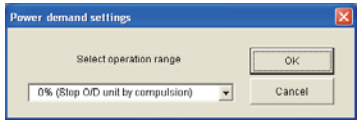

Select the operation range for the outdoor unit. The operation range differs depending on the outdoor unit.

A setting of 0% fully stops all air conditioners connected to the outdoor unit.

A setting of 100% means that no demand operation is possible.

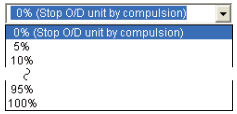

* Operation range 75% means that the outdoor units operation is demand-controlled in the range of 0% – 75%.

4-10. Control/Status Change History

[Procedure]
On the menu bar, select "List display" – "Operation/Status change log".

This displays the history of indoor units which have had changes in the status of any device. History can also be displayed for a specified period. Extraction conditions can be set to filter the display and show only history items of certain types.

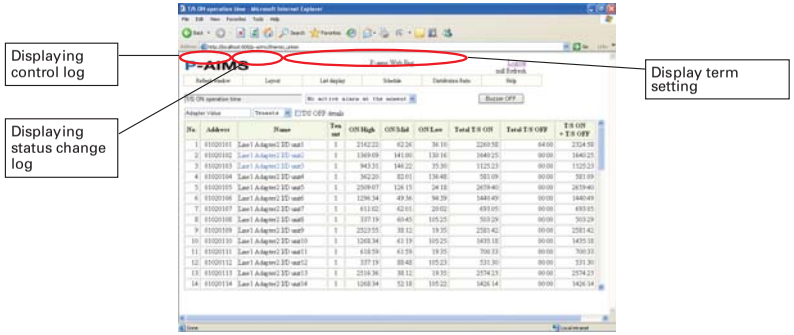

[Operation]	:Displays control log.
[Status change]	:Displays status change log.
[Term setting]	:Use to specify the period of log to display.

Key

- · Address :Displays the addresses of indoor units.
- · Name :Displays the names of devices which have been controlled or have had changes in their operating status.
- · Operation :Displays details of the controlled devices, or their status changes. Status change: dark green, Controller: pale blue, Schedule: blue, Fire alarm: orange, Event: dark blue
- · ON/OFF :Displays changes in operation status. ON: green, OFF: red, Fire Off: orange, fire cancel: orange, other: black
- · Mode :Displays the operating mode. A/cool, A/Heat: green, Cool: blue, Heat: red, Fan: gray, Dry: pale blue
- · Set T. :Displays the set temperature.
- · Fan :Displays fan speeds. Auto (automatic fan speed), High, Med., Low
- · Flap :Displays the directions of flaps. Swing, F1 – F5
- · Prhbt :Displays the central control status. Individual (no prohibition), Prhbt 1 – Prhbt 7 (various prohibitions are settable)
- · Date :Displays the times of control and status changes.

* The maximum number of display items during automatic update is 2,000.
* The maximum number of display items in a specified term is 10,000.
* The maximum number of stored log items is 200,000. Data items exceeding that number are deleted.
* We recommend setting automatic backup under "Print" – "Auto EXCEL output settings".
  History can be saved for each date. The maximum number of items that can be saved per day is 400,000.

4-10-1. Display method

4-10-1-1. Displaying control history

The control history is displayed when the Operation button has been clicked on and remains depressed. The history displays control operations using the remote control unit, schedule and other means.

Click on a button that has been pressed to change it back to the un-pressed state.

4-10-1-2. Displaying status change history

The status change history is displayed when the Status change button has been clicked on and remains depressed. The entire history of air conditioner status change is displayed.

* If both the Operation button and the Status Change button are pressed, both operation and status change logs are displayed. If neither button has been pressed, nothing is displayed.

4-10-1-3. Display time range specification method

Click on the Term setting button to display the Term Setting screen.

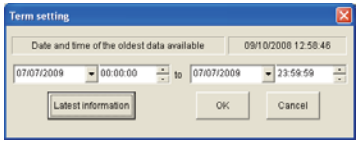

Click on the button on the right of the date display space to display the calendar.

Click on the calendar dates to select the term of history items to display.

Refer to "4.3 Calendar" for the calendar control method.

Click on the button on the right of the time display space to set the time.

Click first on the hours, minutes and seconds, then on the button to update the hours, minutes and seconds.

Specify the start and end dates. History is displayed for the specified range.

* Set an end date that is later than the start date. Results will not be displayed correctly if the end date is earlier than the start date.

Specify the display term, then click on the OK button to display history in the specified term.

To close the Term Setting screen, click on the Cancel button.

To display the latest history, click on the Latest information button without specifying a term.

* The maximum number of display items in a specified term is 10,000.
* This displays the latest count.
* Once a term is specified, the term specification will be as same as previous one when this screen is displayed again.

If there is no history on the specified dates, the display is as shown below.

No.	Address	Name	Operation	ON/OFF
		No applicable history		

4-10-2. Printing

4-10-2-1. Excel output

[Procedure]
On the menu bar, select "Print" – "EXCEL output".

Currently displayed history can be saved as a file in CSV format, which can be displayed by Microsoft Excel and similar applications. The content displayed on the screen is placed in the CSV file. Switch the display to place only control history, or only status change history, in the file.

Refer to "4-6-2 Excel output" for the operation method.

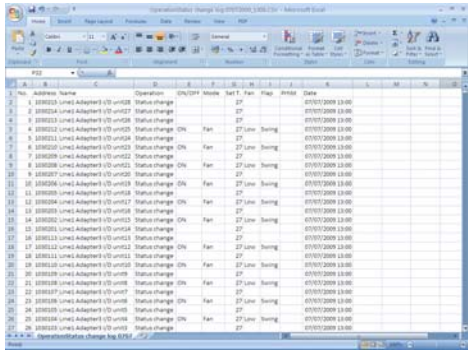

The file name is assigned automatically.

OperationStatus change log 07072009 _ 1308.CSV

Name DDMMYYYY hhmm

4-11. Alarm list & alarm log

[Procedure]
On the menu bar, select "List display" – "Alarm list & alarm log".

The display can present either a list of currently ongoing alarms, or alarms that have occurred to date.

4-11-1. Alarm list

This displays the history of alarms and restoration for each device. History can also be displayed for a certain term.

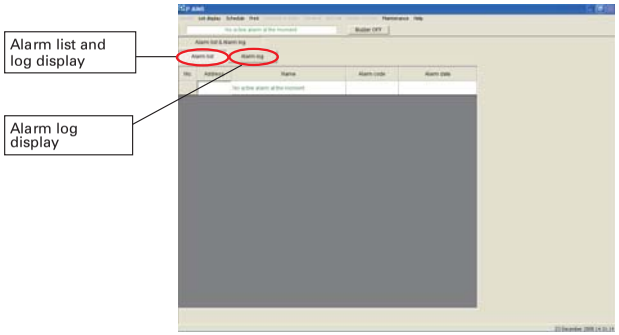

Alarm list :Displays the alarm list.

Alarm log :Displays alarm history.

Key

- Address :Displays the addresses of alarms.
- Name :Displays the names of devices which have issued alarms.
- Alarm code :Displays alarm codes at the times alarms are issued.
- Alarm date :Displays the data and time at which the alarm occurred.

* The maximum number of display items is 2,000.

4-11-1-1. Display method

When the Alarm list is pressed in, the alarm list is displayed.
The alarm list only displays current alarms which are still in effect.
Either the Alarm History button or the Alarm List button will always be selected.
The alarm is automatically removed from the list if it has been restored.

4-11-1-2. Excel output

[Procedure]
On the menu bar, select "Print" – "Excel output".

The currently displayed list can be saved as a file in CSV format, which can be displayed by Microsoft Excel and similar applications.

Refer to "4-6-2 Excel output" for the operation method.

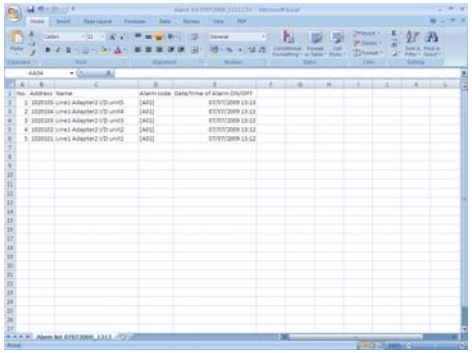

The file name is assigned automatically.

Alarm list 07072009 _ 1313.CSV

Name DDMMYYYY hhmm

4-11-2. Alarm log

This displays the log of alarm occurrence and restoration to date. Display conditions can be set in order to display only certain alarms.

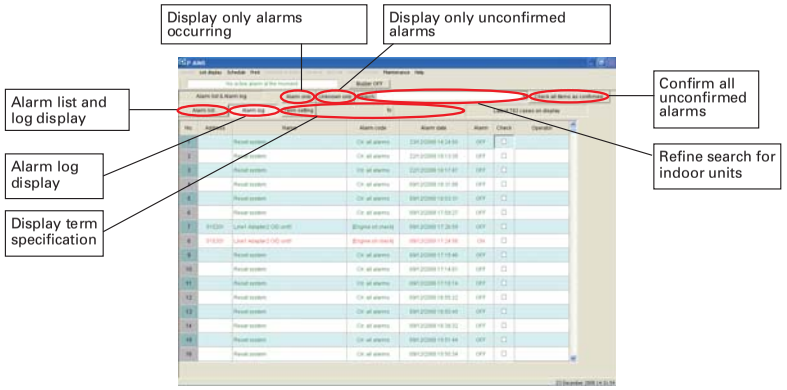

Alarm list	:Displays the alarm list.
Alarm log	:Displays alarm log.
Alarm only	:Displays only the log of alarms which have occurred.
Unknown only	:Displays only the log of alarms which have not been confirmed.
Search	:Use to select the indoor units to display.
Check all items as confirmed.	:Confirm all unconfirmed alarms.
Term setting	:Use to specify the period of log to display.

Key

· Address	:Displays the addresses of alarms.
· Name	:Displays the names of devices which have issued alarms.
· Alarm code	:Displays alarm codes at the times alarms are issued/restored.
· Alarm date	:Displays dates and times when alarms are issued/restored.
· Alarm	:Displays occurrence/restoration status of alarms.
· Check	:Displays the status of alarm confirmation by the operator. Add a check mark to confirmed alarms.
· Operator	:Displays the name of the person who confirmed the alarm.

* The maximum number of display items is 2,000.

4-11-2-1. Display method

When the [Alarm log] button is pressed in, the alarm log is displayed.
The log of alarms occurring to date, and their restoration status, can be checked here.
Either the [Alarm log] button or the [Alarm list] button will always be selected.

4-11-2-2. Refining the displayed data

When the [Alarm only] button has been pressed, only alarms which have occurred historically are displayed. Click on the button again to return the button to its un-pressed state.

When the [Unknown only] button has been pressed, only alarms which have been confirmed historically are displayed. Click on the button again to return the button to its un-pressed state.

> * These two buttons can be used in combination.
> For example, if both the [Alarm only] and the [Unknown only] buttons are pressed, the display is limited to current alarms that are unknown.

Selecting the indoor unit to display refines the display to cover only that indoor unit.

Click on the button on the right of the indoor unit display column, to display the list of registered indoor units.

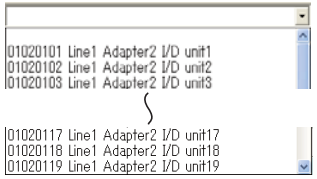

> Click on the indoor unit to display. History is displayed for the selected indoor unit.
> The [Alarm only] and [Unknown only] buttons can be used together to display only alarms for the selected indoor unit, or only unconfirmed alarms.

> * Select the blank at the top of the list to return to display of all logs.
> * When this screen is displayed again from another screen, it automatically reverts to displaying all items.

4-11-2-3. Display range term specification method

Click on the [Term setting] button to display the Term Setting screen.

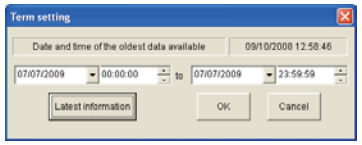

Click on the button on the right of the date display space to display the calendar.
Click on the calendar dates to select the term of history items to display.
Refer to "4.3 Calendar" for the calendar operation method.

Click on the button on the right of the time display space to set the time.
Click first on the hours, minutes and seconds, then on the button to update the hours, minutes and seconds.

Specify the start and end dates. Log is displayed for the specified range.

> * Set an end date that is later than the start date. Results will not be displayed correctly if the end date is earlier than the start date.

Specify the display term, then click on the [OK] button to display history in the specified term.
To close the Term Setting screen, click on the [Cancel] button.

To display the latest log, click on the [Latest information] button without specifying a term.

> * Once a term is specified, the term specification will be as same as previous one when this screen is displayed again.
> * The maximum number of display items for a specified term is 10,000, and the maximum for latest information display is 2,000. Latest information display is updated automatically.

4-11-2-4. Alarm confirmation

After confirming alarms, the operator should add check marks to those alarms to manage their status.

Click in the Confirmation column for the confirmed alarms to add check marks.
Click again where there is a check mark to remove it.

Click in the frame of the operator column to display the button on the right of the frame.

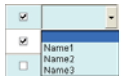

> Select the name of the operator who confirmed the alarm.

When the [Unknown only] button has been pressed, only alarms which do not have check marks (i.e. they have not been confirmed) are displayed.

> * Alarms cannot be confirmed just by registering the operator name.
> * Use the "Maintenance" – "Register operator information" screen to register operator names.
> If the operator name has been changed on the "Maintenance" – "Register operator information" screen, all names in the confirming operator column will be updated to the new names.

4-11-2-5. Print screen

Refer to “4-6-1 Print screen” for details of how to operate this screen.

4-11-2-6. Excel output

[Procedure]
On the menu bar, select “Print” – “EXCEL output”.

Currently displayed log can be saved as a file in CSV format, which can be displayed by Microsoft Excel and similar applications.

Refer to “4-6-2 Excel output” for the operation method.

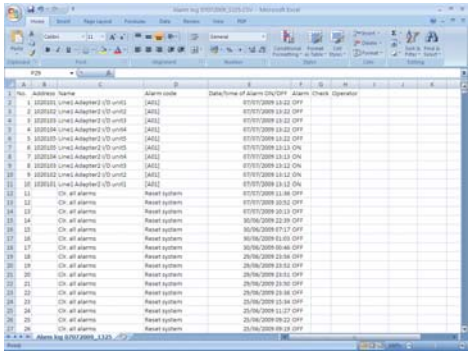

The file name is assigned automatically.

Alarm log 07072009 _ 1325.CSV

Name DDMMYYYY hhmm

4-11-2-7. Settings for automatic Excel output

Refer to “4-6-3. Settings for automatic Excel output” for details of how to operate the Auto EXCEL output settings screen.

4-12. Schedule/Results

[Procedure]
On the menu bar, select “Schedule” – “Schedule/results”.

This displays the schedule and results in bar graph form.

The display term can be specified in order to check the presetting status, the working status of a device relative to its schedule, or other information.

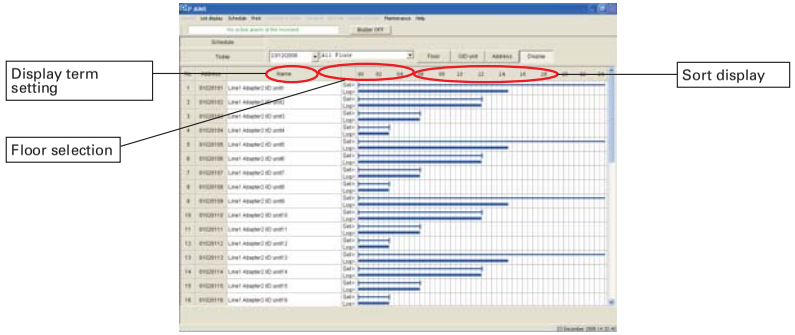

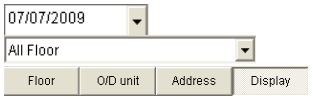

:Use to select the dates to display.
:Use to select floor areas.
:Use to select the display order.

Key

- Address :Displays the addresses of indoor units.
- Name :Displays the names of the indoor units.
- Graph :Upper Schedules. Lower: Displays results.
  Auto cool, Auto heat: green, Cool: blue, Heat: red, Fan: gray, Dry: pink
  The schedule graph display is displayed in black if it is only showing On/Off schedules.

* Display is only for main units.
* If a communications error occurs during operation, operation is displayed as the last mode used.
* Use the “Schedule” – “Schedule operation time settings” screen to set schedule times.
* Use the “Schedule” – “Mode settings (Calendar)” screen to set schedule modes.

4-12-1. Display method

4-12-1-1. Selecting displayed floor and area

If the floor and area is "All Floor", all registered indoor units are displayed. Click on the button on the right edge of the floor selection list to display a list of registered floors and areas.

From the list, select the floor or area to monitor. A list of indoor units registered within that floor and area is displayed.

4-12-1-2. Sort lists

Click on the Sort button to change the display order of a list. The currently pressed button is the one which determines the sort order.

Click on the buttons to change the list orders. If other buttons are pressed, the one that was clicked last is effective. The illustration above shows the list displayed in the indoor unit master order.

Floor :Display is in order of floor name registration.
O/D unit :Display is in order of outdoor unit addresses, from the most recent.
Address :Display is order of addresses, from the most recent.
Display :Display is in order of most recent registrations to the indoor unit master.

> * Any button can be selected. It is not possible to select multiple buttons at the same time.

4-12-1-3. Display time range specification method

Click on the button for the box with the date displayed at the top of the screen to display the calendar. From the calendar, select the date to display.

History is displayed for the specified date.

Refer to "4-3. Calendar" for the calendar operation method.

> * The graph of future schedule cannot be displayed if schedule times and mode setting have not been set.
> * If this screen is displayed first, it shows the operation status for that day.

4-12-2. Detailed display of schedule time

Click on the indoor unit name which has its schedule time displayed on the graph to display detailed schedule content.

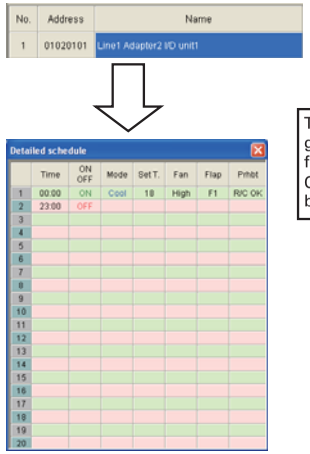

The detailed schedule for the displayed graph can be checked. It cannot be changed from this screen.
Close this screen by clicking on the button in the upper right.

· Time :Display schedule time.
· ONOFF :Specify air conditioner starts and stops. It is also OK to make no specification. In that case, only the set items change.
· Mode :Displays the operation modes of indoor units. A/Cool, A/Heat: green, Cool: blue, Heat: red, Fan: gray, Dry: pale blue
· SetT :Displays the set temperature.
· Fan :Displays fan speeds. Auto (automatic fan speed), High, Med., Low
· Flap :Displays the directions of flaps. Swing, F1 – F5 (Heat, Fan: F1 – F5, for Cooling: F1 – F3)
· Prhbt :Displays central control (local operation prohibited). Individual (no prohibition), Prhbt 1=Prhbt 7 (Settings can be made for various types of central control (Prohibition))

> * Items which have not been set cannot be displayed.

4-13. Mode setting (calendar)

[Procedure]
On the menu bar, select "Schedule" – "Mode settings (Calendar)".

Set the scheduled operation mode to calendar.

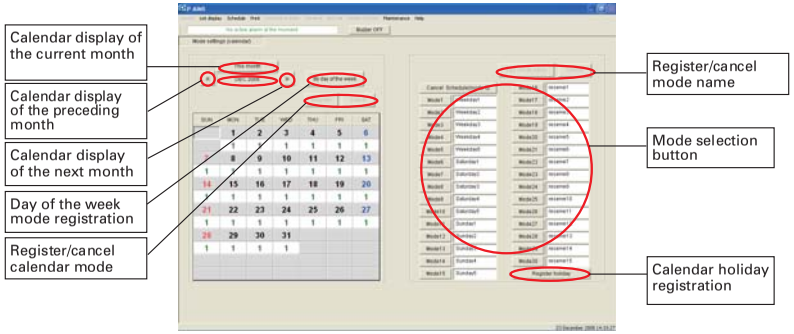

* Use the "Schedule" – "Schedule operation time settings" screen to set schedule times for each mode.

4-13-1. Display method

4-13-1-1. Calendar display

Click on the « » buttons on the left and right of the place where the current date and month are displayed above the current calendar, to switch the calendar to earlier and later months.

Click on the This month button to display the calendar for the current month.

* The buttons are grayed out and unavailable during mode setting.
* The displayed calendar cannot be changed until mode settings are registered or cancelled.

4-13-2. Calendar operation

4-13-2-1. Registering holidays on the calendar

Click on the Register holiday button to leave it pressed.
Click on the date to make into a holiday, and its date text turns red.
To cancel the holiday setting, click again on the red text to restore the original text color and cancel the holiday setting.

Once you have finished editing calendar mode numbers, click on the Register button to save the mode.
Click on the Cancel button to restore the changed content to its previously registered status.

To abandon holiday registration, click on any of the mode number buttons.

Cancel Schedule(mode 0)

The Register holiday button reverts to its non-depressed state.

* Even if holidays have been registered on the calendar, the schedule will not necessarily switch to holiday operation. Holiday operation requires registration of a schedule mode number for holidays on the calendar.
* Holidays cannot be registered for dates that have passed.

4-13-3. Registering mode settings

4-13-3-1. Registering modes to the calendar

Select the mode to register from those in the mode list.

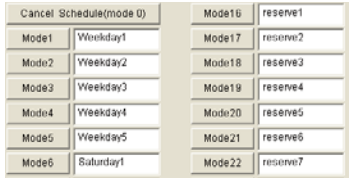

When you click on the mode button to register, the selected mode button changes to the depressed Mode1 state.
When you click on the date to register on the calendar, the number of the selected mode is registered in the area below the date.

* To change to another mode, select another mode number and click on the registered date. Mode number will be overwritten.
* Mode registrations to the calendar can be made within a period of one year, starting from the day after the registration is made.
* Modes cannot be registered for dates that have passed.

4-13-3-2. Deleting modes from the calendar

To delete a registered mode number, click on Cancel Schedule(mode 0) in the mode list to depress it. Cancel Schedule(mode 0)
Click on a date with a registered mode number to delete the number.

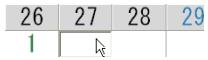

* Modes cannot be deleted from dates that have passed.

4-13-3-3. Registering an edited calendar

Once you have finished editing calendar mode numbers, click on the Register button to save the mode.

Click on the Cancel button to avoid registering the edited mode.

> * The Register and Cancel buttons become available once the calendar is edited. It is not possible to register a mode to another calendar without clicking either button first.
> * If the Cancel button is clicked, the calendar reverts to the state before editing the mode numbers.

4-13-3-4. Registering in day-of-the-week units

You can specify a set period and only make the mode settings once for each week.

Click on the By day of the week button to display the Schedule Mode Setting screen for setting by day of the week.

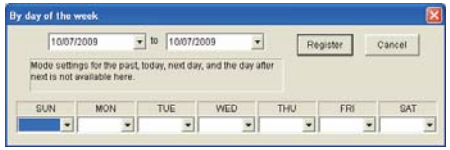

Click where the date is displayed to specify the term to set for weekly mode.

Click on the button on the right of the date display space to display the calendar.

On the calendar, click on the dates from the start to the end of the term you need to set the mode for.

Refer to "4-3. Calendar" for the calendar operation method.

Mode setting is not possible for past dates, today, tomorrow or the day after.

Set the start and end dates.

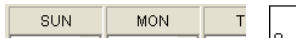

Click on the under each day of the week to display the list of mode numbers.

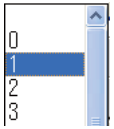

Click to select the mode number to register, with reference to the mode list.

Register the mode for each day of the week, and click on the Register button to register the mode number to the calendar for the specified period.

To cancel registration of the day of the week schedule mode, click on the Cancel button.

> * It may not be necessary to set mode numbers for all days of the week.
> * There is no need to click on the calendar Register or Cancel buttons after setting schedule modes by day of the week. Settings are registered to the calendar once the Register button is clicked on this screen.
> * If some mode numbers are already set to the calendar, registering the schedule by day of the week overwrites those mode numbers.

4-13-4. Mode comment operation

4-13-4-1. Registering mode comments

To edit mode comments, click in the comment area of the mode list.

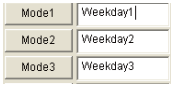

The text cursor is displayed, so use the keyboard to edit the comment.

Once you have finished editing the comment, click on the Reg. mode name button to save.

Click on the Cancel button to return the edited mode to its previous state, without registering changes.

> * The Reg. mode name and Cancel buttons become available once comments have been edited.
> * If the Cancel button is clicked, the mode name reverts to the name before the edit.
> * The mode names are used as the mode names set in the "Schedule" - "Schedule operation time settings" screen.

4-13-5. Change confirmation

If you have changed the scheduled operation times and attempt to switch to another screen without first saving the changes, the change confirmation message is displayed.

Click on the Yes button to discard changes and switch screens.

Click on the No button to continue using this screen.

4-14. Schedule Operation Time Setting

[Procedure]
On the menu bar, select "Schedule" - "Schedule Operation Time Setting".

Set the scheduled operation times for each registered mode. The screen varies depending on whether or not you have registered a schedule group under "Maintenance" - "Register schedule group name". If you have registered a schedule group, use the "Maintenance" - "Indoor unit master" screen to assign indoor units to groups. If you have not registered any schedule groups, settings must be made for individual indoor units, so assignment setup is not required.

The screen if you have registered schedule groups

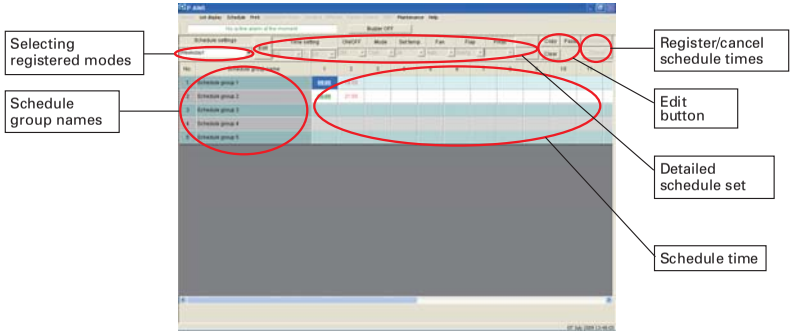

The screen if you have not registered schedule groups

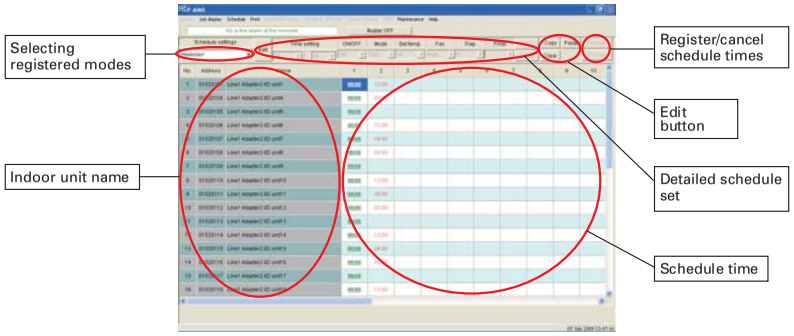

:Selects the mode to register.
:Sets schedule times and other details.

:Use for editing schedule times. (Use for copying, pasting and clearing setting content).

:Registers the changed content.
:Restores all changed data to its previous states.

Key

- Schedule group name :Displays the schedule group name. (If a schedule group has been registered) Use the "Maintenance" - "Register schedule group name" screen to register schedule groups. Use the "Maintenance" - "Indoor unit master" screen to assign indoor units to groups.
- Address :Displays the address numbers of indoor units. (If no schedule group has been registered)
- Name :Displays the names of indoor units. (If no schedule group has been registered) Use the "Maintenance" - "Indoor unit master" screen to register Indoor unit names.
- Schedule time :Displays scheduled times. Up to 20 can be set. When the scheduled time is reached, the indoor unit settings are changed according to the set items.

* Schedule time registrations can only be applied to the main unit. Sub-units turn on and off according to the schedule of the main unit.
* The underlined display (08:00) of set items indicates that other related items have also been set, such as modes other than On/Off and set temperatures.
* Consult your dealer or service provider about registering or changing the indoor unit master.

4-14-1. Registering schedule times

4-14-1-1. Mode selection

Select the mode for registering the schedule. Settings for schedule time are made for each operation mode.

Click on on the right side of the mode name display to display the list of mode names.

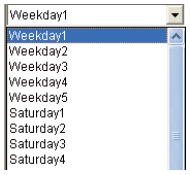

Click to select the mode number to register, with reference to the mode list.

* Use the "Schedule" – "Mode Setting (calendar)" screen to register mode names.

4-14-1-2. Setting schedule times

Click on the cell to set the schedule for. The background turns blue.

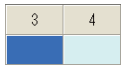

* Drag the mouse down a column to select multiple setting cells.
* Click on the item name area for 1–20 to select all in the column.
* It is only possible to select multiple cells when all are in the same column. A message will be displayed if you select multiple columns, or a horizontal row, and click on the Edit button.

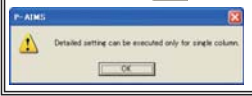

Click on the Edit button to enable registration of detailed settings.

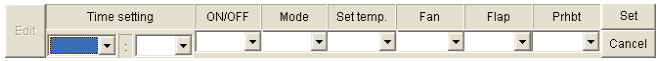

Set the set times, modes, set temperatures, fan speeds, flaps and prohibitions.
Click on the button on the right of each cell to display the list.
Select the item to set.

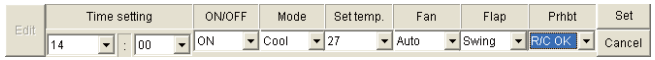

* There is no need to set all items. Only set the items required. However, time-related settings are required.

Once you have finished editing the detailed settings, click on the Set button.

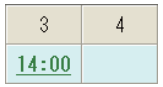

The time is set.
If cells in multiple rows are selected, the time will be set to all selected rows.

Click on the Cancel button to cancel detailed settings.

* When making time settings, start from earlier times and proceed to later times. It is not possible to set the same time of an existing setting.
  Example
  10:00 On: :17:00 On
  With the scheduled operation time settings as shown in the example above, it is only possible to set times between the existing times in the range of 10:01–16:59.

4-14-1-3. Confirming schedule time settings

If you select a time cell with a scheduled time setting, the current settings are displayed in gray in the detailed settings column.

4-14-2. Edit function

4-14-2-1. Editing schedule times

Use the edit button in the upper right of the screen to edit schedule times.

Copy :Select by clicking on the time cell to copy. Click on the Copy button to store the selected time cell in memory.

Paste :Select the time cell to paste, then click on the Paste button to paste the copied time.

Clear :Select the time cell to clear, then click on the Clear button to clear the registered time.

* Pasting into the time cell for the same indoor unit is not possible because the times would be the same for the unit.
* Even on a different indoor unit, pasting is impossible if there is an existing registration for the same time or an earlier time.

4-14-3. Saving changed data

If the scheduled operation time has been changed, click on the Register button in the right side of the screen to save the settings. All changed data is saved.

Click on the Cancel button to return all changed data to its previous state.

* The Register and Cancel buttons become available once the schedule times are edited.
* If the Cancel button is clicked, the schedule times revert to the settings before the edit.

4-14-4. Change confirmation

If you have changed the scheduled operation times and attempt to switch to another screen without first saving the changes, the change confirmation message is displayed.

Click on the Yes button to discard changes and switch screens.

Click on the No button to continue using this screen.

4-15. Schedule Changes

[Procedure]
On the menu bar, select "Schedule" – "Update Schedule".

Check and change scheduled operating times for the same day, next day and day after that. The screen varies depending on whether or not you have registered a schedule group under "Maintenance" - "Register schedule group name". If you have registered a schedule group, use the "Maintenance" - "Indoor unit master" screen to assign indoor units to groups. If you have not registered any schedule groups, settings must be made for individual indoor units, so assignment setup is not required.

The screen if you have registered schedule groups

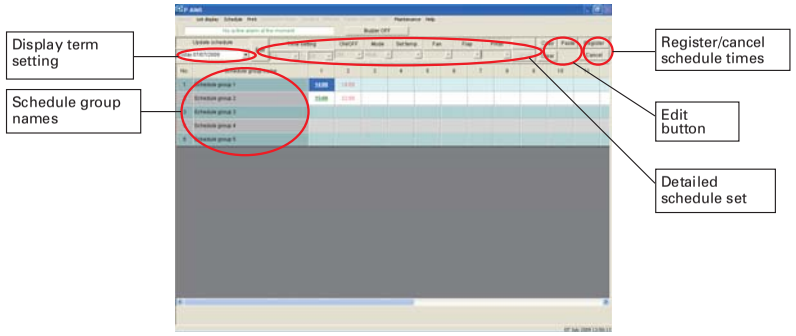

The screen if you have not registered schedule groups

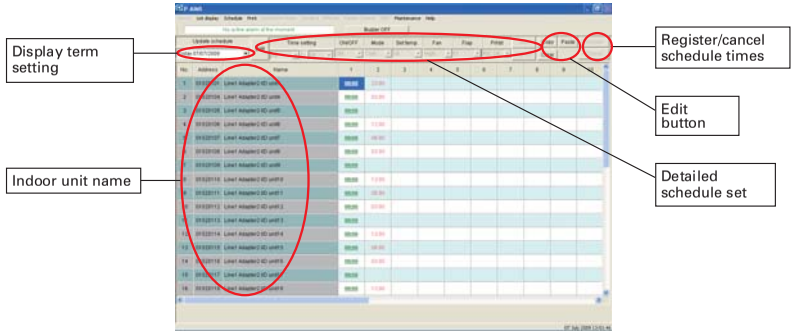

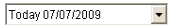

:Select the date to change. (The same day, next day, and day after that can be specified).

:Sets schedule times and other details.

:Use for editing schedule times. (Use for copying, pasting and clearing setting content).

:Registers the changed content.

:Restores all changed data to its previous states.

Key

· Schedule group name	:Displays the schedule group name. (If a schedule group has been registered) Use the "Maintenance" - "Register schedule group name" screen to register schedule groups. Use the "Maintenance" - "Indoor unit master" screen to assign indoor units to groups.
· Address	:Displays the address numbers of indoor units. (If no schedule group has been registered)
· Name	:Displays the names of indoor units. (If no schedule group has been registered) Use the "Maintenance" - "Indoor unit master" screen to register Indoor unit names.
· Schedule time	:Displays scheduled times. Up to 20 can be set. When the scheduled time is reached, the indoor unit settings are changed according to the set items.

* Schedule time registrations can only be applied to the main unit. Sub-units turn on and off according to the schedule of the main unit.
* The underlined display (08:00) of set items indicates that other related items have also been set, such as modes other than On/Off or set temperatures.
* Consult your dealer or service provider about registering or changing the indoor unit master.

4-15-1. Display method

Click on the button for the cell with the date displayed at the upper left of the screen to display the dates for that day and the next two days.

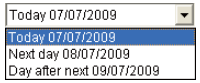

Select the term to display.

Schedule times are displayed for the specified date.

4-15-2. Registering schedule times

4-15-2-1. Setting schedule times

Click on the cell to set the time for. The background turns blue.

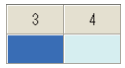

* Drag the mouse down a column to select multiple setting cells.
* Click on the item name area for 1–20 to select all in the column.
* It is only possible to select multiple cells when all are in the same column. A message will be displayed if you select multiple columns, or a horizontal row, and click on the Detailed Settings button.

Click on the Edit button to enable registration of detailed settings.

Set the set times, modes, set temperatures, fan speeds, flaps and prohibitions.

Click on the button on the right of each cell to display the list.

Select the item to set.

* There is no need to set all items. Only set the items required. However, time-related settings are required.

Once you have finished editing the detailed settings, click on the Set button.

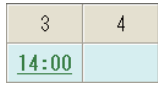

The time is set.
If multiple cells are selected, the time will be set to all selected columns.

Click on the Cancel button to cancel detailed settings.

* On and Off settings form pairs in schedule times, but to use only On or only Off, set a time for either On or Off.
* When making time settings, start from earlier times and proceed to later times. It is not possible to set the same time of an existing setting.
  Example
  10:00 On: :17:00 On
  With the scheduled operation time settings as shown in the example above, it is only possible to set times between the existing times in the range of 10:01–16:59.
* Settings cannot be made for times that have already passed.

4-15-2-2. Confirming schedule time settings

If you select a time cell with a scheduled time setting, the current settings are displayed in gray in the detailed settings column.

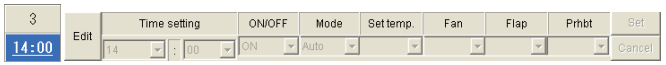

4-15-3. Edit function

4-15-3-1. Editing schedule times

Use the edit button in the upper right of the screen to edit schedule times.

Copy :Select by clicking on the time cell to copy. Click on the Copy button to store the selected time cell in memory.

Paste :Select the time cell to paste, then click on the Paste button to paste the copied time.

Clear :Select the time cell to clear, then click on the Clear button to clear the registered time.

* Pasting into the time cell for the same indoor unit is not possible because the times would be the same for the unit.
* Even on a different indoor unit, pasting is impossible if there is an existing registration for the same time or an earlier time.

4-15-4. Saving changed data

If the scheduled operation time has been changed, click on the Register button in the right side of the screen to save the settings. All changed data is saved.

Click on the Cancel button to return all changed data to its previous state.

* The Register and Cancel buttons become available once the schedule times are edited.
* If the Cancel button is clicked, the schedule times revert to the settings before the edit.

4-15-5. Change confirmation

If you have changed the scheduled operation times and attempt to switch to another screen without first saving the changes, the change confirmation message is displayed.

Click on the Yes button to discard changes and switch screens.

Click on the No button to continue using this screen.

4-16. Register Maintenance Information

[Procedure]
On the menu bar, select "Maintenance" – "Register maintenance information".
(Password level 1)

Make maintenance settings in order to temporarily suspend monitoring due to mechanical work or device malfunctions.

On/Off operation and warning display are disabled for devices registered for maintenance.

This screen is also used for canceling maintenance.

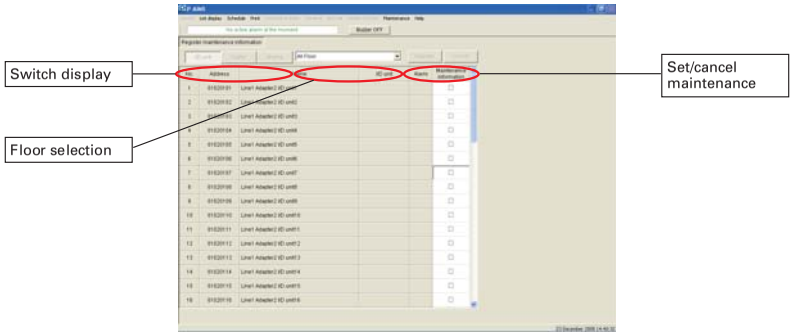

I/D unit | Digital | Analog :Switches the display.
(Enabled when the optional Facility Control software has been installed).

All Floor :Use to select floor areas.

Register :Registers the set content.

Cancel :Reverts to the previously registered content.

Key
- Address :Displays the addresses of indoor units.
- Name :Displays the names of the indoor units.
  Normal: black, W/O connection: red
- I/D unit :Displays the codes of indoor units.
- Alarm :Displays alarm codes currently in effect.
- Maintenance information :Set whether or not to register maintenance information.
  Add a check mark to items for maintenance registration.

4-16-1. Display method

4-16-1-1. Selecting displayed floor and area

If the floor and area is "All", all registered indoor units are displayed. Click on the button on the right edge of the floor selection list to display a list of registered floors and areas.

From the list, select the floor or area to monitor. A list of indoor units registered within that floor and area is displayed.

4-16-2. Maintenance settings

4-16-2-1. Maintenance settings

Click on the register maintenance information column for devices that are not set for maintenance. They will then have a check mark in the register maintenance information column, so monitoring and control will not be applied, even if an alarm occurs. The buzzer will not sound if an alarm occurs.

4-16-2-2. Cancel maintenance

Click on the register maintenance information column for devices that are set for maintenance. The check mark will be removed from the register maintenance information column, and they will revert to normal monitoring. All operations will be enabled.

4-16-2-3. Registering changed data

Register button to register changes. All changed data is registered.

4-16-2-4. Deleting settings

Click on the Cancel button to revert to the previously registered state.

4-16-3. Change confirmation

If you have changed the maintenance settings and attempt to switch to another screen without first saving the changes, the change confirmation message is displayed.

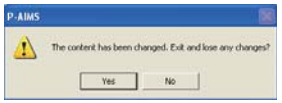

Click on the Yes button to discard changes and switch screens.
Click on the No button to continue using this screen.

4-17. Floor Name Registration

[Procedure]
On the menu bar, select "Maintenance" – "Register floor name".
(Password level 1)

Register floor levels in order to select floors and areas for status monitoring and control, for filter and indoor unit information, schedule and results, and other information.

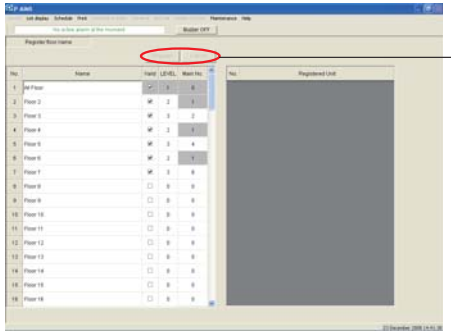

Register :Register settings.

Cancel : Reverts to the previously registered state.

Key
· Name :Displays the floor names.
· Valid :Sets valid/invalid.
· Level :Sets floor levels.
· Main No. :Set the number for main.

4-17-1. Display method

4-17-1-1. Confirmation of indoor units included in each floor

Click on a registered floor name to display a list of indoor units registered on that floor in the indoor unit column on the right side of the screen.

4-17-2. Floor registration

4-17-2-1. Changing floor names

Double click to change the name of a floor. It is also possible to change part of the name of a previously-registered floor. To change the entire name, just type in the name. The existing name will be deleted and the new name displayed.

Once the name has been changed, click on the Register button to register it. Click on the Cancel button to revert to the previously registered state.

4-17-2-2. Enable/disable settings

Valid

To enable the registered content, click in the Enable space to add a check mark. Click there again to remove the check mark, disabling the setting.

* The Level and Main No. cannot be set if the floor is not enabled.

4-17-2-3 Level setting

3
2
3

Click in the Level cell to display the button, then click on it. The list for selecting levels appears. Make a selection. The selectable levels are 2 and 3.

* Level 1 is used for overall display, so it cannot be selected.
* When setting Level, set to Enable.
* Settings cannot be changed where the Level cell is grayed out.

4-17-2-4. Main No. setting

2
2
3

Click in the Main No. cell to display the button, then click on it. A list of Main numbers is displayed, so specify the relevant Main No.

* If Level 2 was set, the Main No. is set unconditionally to 1 and cannot be changed.
* When setting the Main No., set to Enable.
* Settings cannot be changed for cells where the Main No. is grayed out.

4-17-2-5. Registering changed data

Register button to register changes. All changed data is registered.

4-17-2-6. Deleting settings

Click on the Cancel button to revert to the previously registered state.

4-17-3. Change confirmation

If you have changed floor name content and attempt to switch to another screen without first saving the changes, the change confirmation message is displayed.

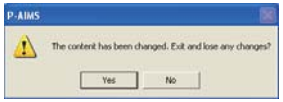

Click on the Yes button to discard changes and switch screens.
Click on the No button to repeat the operation on this screen.

4-18. Register control group name

[Procedure]
On the menu bar, select "Maintenance" – "Register control group name".
(Password level 1)

Control groups can be registered. Indoor units included in the control group can also be registered.

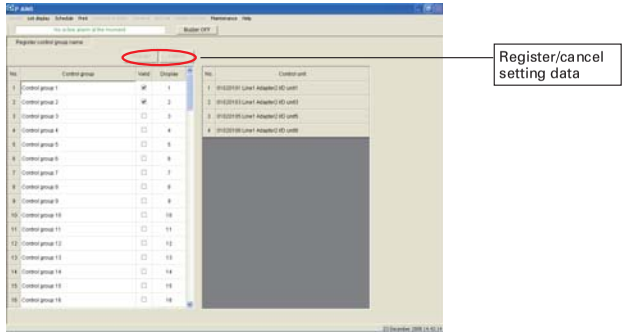

Register :Register settings.

Cancel :Reverts to the previously registered state.

Key

- Control group :Displays the control group names.
- Valid :Sets valid/invalid.
- Display :Displays the order in which the control groups are displayed.

4-18-1. Display method

4-18-1-1. Confirmation of indoor units included in control group

Click on a registered control group to display a list of indoor units registered on that group in the indoor unit column on the right side of the screen.

4-18-2. Registering control groups

4-18-2-1. Changing control group names

Double click to change the name of a control group. It is also possible to change part of the name of a previously-registered control group. To change the entire name, just type in the name. The existing name will be deleted and the new name displayed.

Once the name has been changed, click on the Register button to register it. Click on the Cancel button to revert to the previously registered state.

4-18-2-2. Enable/disable settings

Valid To enable the registered content, click in the Enable space to add a check mark.

☑ Click there again to remove the check mark, disabling the setting.

4-18-2-3. Registering changed data

Register button to register changes. All changed data is registered.

4-18-2-4. Deleting settings

Click on the Cancel button to revert to the previously registered state.

4-18-3. Change confirmation

If you have changed the control groups and attempt to switch to another screen without first saving the changes, the change confirmation message is displayed.

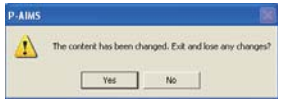

Click on the Yes button to discard changes and switch screens.

Click on the No button to continue using this screen.

4-19. Register Schedule Group Names

[Procedure]
On the menu bar, select "Maintenance" – "Register schedule group name".
(Password level 1)

Register schedule groups.

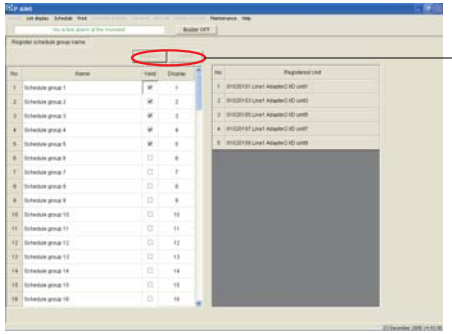

Register :Register settings.

Cancel :Revert to the previously registered state.

Key

- Name :Displays schedule group name.
- Valid :Sets enabled/disabled.
- Display :Displays the order in which the schedule groups are displayed.

4-19-1. Display method

4-19-1-1. Confirmation of indoor units included in each schedule group

Click on a registered schedule group to display a list of indoor units registered on that group in the indoor unit column on the right side of the screen.

4-19-2. Registering schedule groups

4-19-2-1. Changing schedule group names

Double click to change the name of a schedule group. It is also possible to change part of the name of a previously-registered schedule group. To change the entire name, just type in the name. The existing name will be deleted and the new name displayed.

Once the name has been changed, click on the [Register] button to register it. Click on the [Cancel] button to revert to the previously registered state.

4-19-2-2. Enable/disable settings

To enable the registered content, click in the Enable space to add a check mark.
Click there again to remove the check mark, disabling the setting.

4-19-2-3. Registering changed data

Click on the [Register] button to register changes. All changed data is registered.

4-19-2-4. Deleting settings

Click on the [Cancel] button to revert to the previously registered state.

4-19-3. Change confirmation

If you have changed the schedule group and attempt to switch to another screen without first saving the changes, the change confirmation message is displayed.

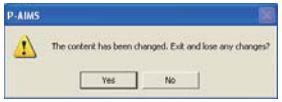

Click on the [Yes] button to discard changes and switch screens.
Click on the [No] button to continue using this screen.

4-20. Register operator information

[Procedure]
On the menu bar, select "Maintenance" – "Register operator information".
(Password level 1)

Register operator names.

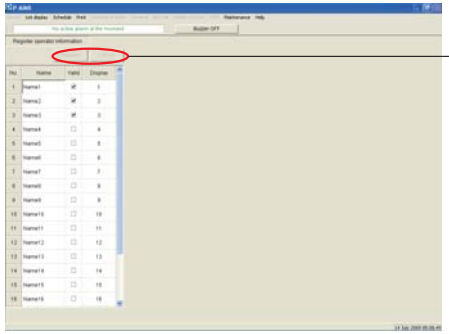

[Register] :Register settings.
[Cancel] :Revert to the previously registered state.

Key

- Name :Displays the operator names.
- Valid :Sets enabled/disabled.
- Display :Displays the order in which the operator names are displayed.

4-20-1. Registering operators

4-20-1-1. Changing operator names

Double click to change the name of an operator. Previously registered operator names can be partially changed. To change the entire name, just type in the name. The existing name will be deleted and the new name displayed.

Once the name has been changed, click on the [Register] button to register it.
Click on the [Cancel] button to revert to the previously registered state.

4-20-1-2. Enable/disable settings

To enable the registered content, click in the Enable space to add a check mark.
Click there again to remove the check mark, disabling the setting.

4-20-1-3. Registering changed data

Click on the Register button to register changes. All changed data is registered.

4-20-1-4. Deleting settings

Click on the Cancel button to revert to the previously registered state.

4-20-2. Change confirmation

If you have changed the operator names and attempt to switch to another screen without first saving the changes, the change confirmation message is displayed.

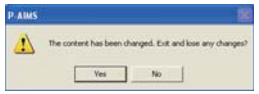

Click on the Yes button to discard changes and switch screens.
Click on the No button to continue using this screen.

4-21. R/C prohibition settings

[Procedure]
On the menu bar, select "Maintenance" – "R/C prohibition settings".
(Password level 1)

Set the prohibition items for each central control mode, which the central system (P-AIMS) uses to prohibit the remote control units of indoor units from exercising control functions.

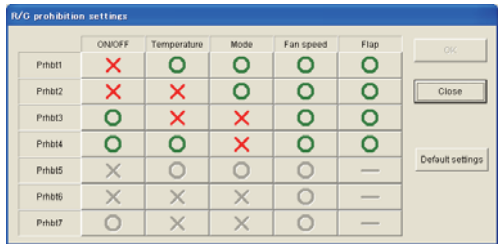

The image above shows the initial values.

✕	:Indicates prohibition. (This mark can be changed)
×	:Indicates prohibition. (This mark cannot be changed)
○	:Indicates permission. (This mark can be changed)
○	:Indicates permission. (This mark cannot be changed)
Default settings	:Initializes central control mode.
OK	:Registers changes to settings.
Cancel	:Restores changes to their previous settings.
Close	:Closes the window.

Central control mode display

Prohibit 1: The remote control unit cannot be used for switching On/Off. (The mode can be changed)
Prohibit 2: The remote control unit cannot be used for switching On/Off, temperature setting and operation mode switching. (The mode can be changed)
Prohibit 3: The remote control unit cannot be used for temperature setting and operation mode switching. (The mode can be changed)
Prohibit 4: The remote control unit cannot be used for operation mode switching. (The mode can be changed)
Prohibit 5: The remote control unit cannot be used for switching On/Off. (The mode cannot be changed)
Prohibit 6: The remote control unit cannot be used for switching On/Off, temperature setting and operation mode switching. (The mode cannot be changed)
Prohibit 7: The remote control unit cannot be used for temperature setting and operation mode switching. (The mode cannot be changed)

* Prohibit 1–4 are for the CZ-CFUNC2.

4-21-1. Control method

4-21-1-1. Changing prohibition settings (affects prohibit 1 – 4)

Click on the button and the button to switch the display and change the central control functions.
It is not possible to switch the display by clicking on the and buttons.

4-21-1-2. Initializing prohibition settings

To initialize control mode for prohibitions 1 – 4 as well, click on the Default settings button. The central control mode initializes.

4-21-1-3. Registering settings

Click on the OK button to register the changed content.

4-21-1-4. Deleting settings

Click on the Cancel button to revert to the previously registered state.

4-21-1-5. Close the screen

Click on the Close button to close the screen.

4-22. Clock setting

[Procedure]
On the menu bar, select “Maintenance” – “Clock setting”.

Set the system time.

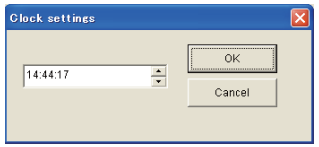

4-22-1. Clock setting method

Click on the location to correct in the hh:mm:ss display to display the cursor there.
Use the up and down arrow buttons at the cursor position to raise or lower the time value there.

4-22-2. Setting

Click on the OK button on the right of the screen to save the time setting and close this screen.
Time is gradually corrected by a separate program, so the change is not applied immediately.
The settings are not saved if you click on the Cancel button. This screen closes.

* Time is corrected at a rate of 100ms per second. (6s per minute, 60s per ten minutes)

4-23. Data backup and restoration

Perform system maintenance tasks such as data backup and restoration.

4-23-1. Data backup

[Procedure]
On the menu bar, select "Maintenance" – "Data backup/restore – Data backup".
(Password level 2)

Make backups of all data. The default file name is automatically the numerals for "yyyymmdd_hhmm", with the extension of bak for the database, ini_backup for initialization files, and reg_backup for the registry.

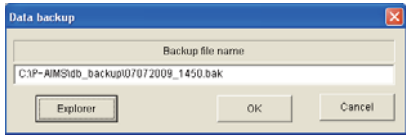

OK :Make backups of data.
Cancel :Exit.
Exploler :Use to change the save folder.

4-23-1-1. Starting data backup

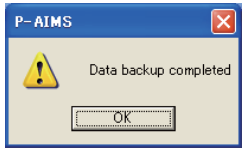

Click on the OK button to backup data. The message "Executing data backup...Please wait" is displayed as the backup data is saved.
Once the backup is complete, a message such as that on the left is displayed. Click on the OK button.
The data backup process is complete.

* The message on the right is displayed if the backup fails. Check the available free space on the backup storage drive, etc. Click on the OK button to go back to Data Backup.

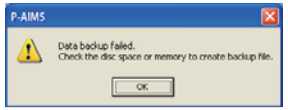

* If the extension is changed, the data cannot be used for data restoration, so change extensions with caution.

4-23-1-2. Deleting

Click on the Cancel button to exit without saving the backup.

4-23-1-3. Changing the save destination

Click on the Exploler button to display the "Backup file name" screen and change the save folder.

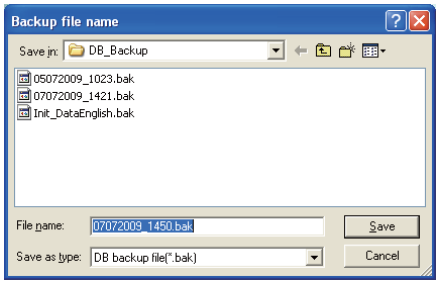

Click on the button beside "Save in:" to display a folder list as shown on the left. Select the required folder from the folder list.

Click on the Save button to apply the selected save destination and return to the Data Backup screen.

Click on the Cancel button to return to the Data Backup screen without doing anything.

4-23-2. Data restoration

[Procedure]
On the menu bar, select "Maintenance" – "Data backup/restore – Restore data".
(Password level 2)

Use the files created at the data backup stage in a process to return the system to its state at the time the data was backed up. That process means that all data generated between the time the data was last backed up and the time of restoration is lost, so proceed with caution.

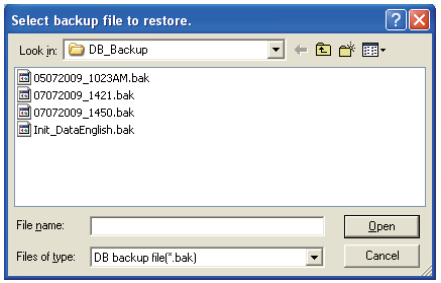

Open :Specify the file name.

Cancel :Exit.

4-23-2-1. Start data restoration

On the "Select backup file to restore" screen, click on the file name to restore. The specified file name is displayed in the "File name" space, then click on the Open button.
The Data Restore screen is displayed.

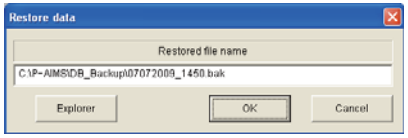

OK :Data is restored.

Cancel :Exit.

Exploler :Use this when you need to specify a different backup file.

4-23-2-1-1. Starting data restoration

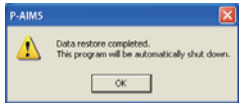

To start data restoration, click on the OK button. A message reading "Restore data ..." is displayed.
Click on the No button to return to the Data Restore screen.
When you click on the Yes button, the message "Processing restore ... Please wait." is displayed, and the restoration process starts.
Once the restoration is complete, a message such as that on the left is displayed.
Click on the OK button.
Exit the P-AIMS system.
Restart the P-AIMS system.
The data restoration process is complete.

4-23-2-1-2. Canceling data restoration

Click on the Cancel button to exit without restoring data.

4-23-2-1-3. Re-specifying the data restoration file

Click on the Exploler button to re-display the "Select backup file to restore" screen.

* If the message "Data backup failed" is displayed during data restoration, it is possible that the database was partially restored and has lost integrity as a database.
  In that case, reboot Windows SP, start P-AIMS and repeat the data restoration.

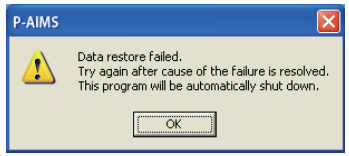

* If the message "Data backup failed" still appears, contact your dealer or service provider.

4-23-3. Canceling data restoration

[Procedure]
On the menu bar, select "Maintenance" – "Data backup/restore – Cancel data restore".
(Password level 2)

Cancellation of data restoration is a function for returning the system to its state before the data restoration process. You cannot select from the menu without performing data restoration first.
* This is an auxiliary function for use when data has been restored.

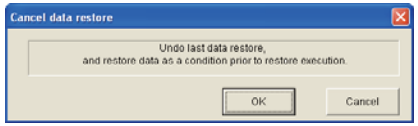

OK :Cancel data restoration.

Cancel :Exit.

4-23-3-1. Starting cancellation of data restoration

To start cancellation of data restoration, click on the OK button. A message reading "After closing ..." is displayed.

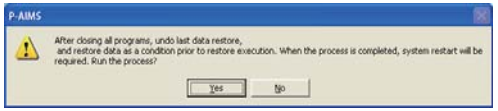

Click on the [No] button to return to the Cancel Data Restore screen.

Click on the [Yes] button to display the message "Canceling restore ... Please wait.".

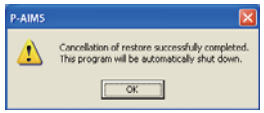

Once cancellation of the restoration process is complete, a message such as that on the right is displayed.
Click on the [OK] button. Exit the P-AIMS system. Restart the P-AIMS system. Cancellation of the data restoration process is complete.

4-23-4. Automatic backup settings

[Procedure]
On the menu bar, select "Maintenance" – "Data backup/restore – Auto backup settings".
(Password level 2)

This function makes data backups automatically. The time set for the backup process is 00:10 each day.The file name is "Auto yyyymmdd". File extensions are the same as for data backups. This is the form that can be used for data restoration.

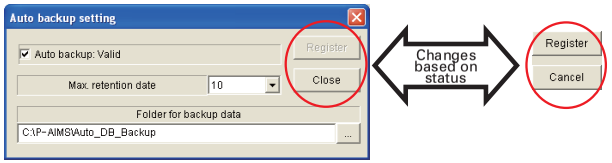

[Auto backup: Valid]	:Enables automatic backups.
[Max. retention date 10]	:Specifies the saving period for backup files.
[Register]	:Registers the set content.
[Cancel]	:Reverts to the previously registered content.
[Close]	:Closes the window.
[...]	:Changes the backup creation folder.

4-23-4-1. Enable/disable automatic backup

To enable the automatic backup setting, click on [Auto backup: Valid], and add the check mark. Saving is enabled with the check mark added. Click again to remove the check mark.

4-23-4-2. Setting the maximum storage term

Set the maximum duration for storing backup files.

Click on the [▼] area of [Max. retention date 10] to display the pulldown menu. Select from the menu. In this illustration, the specification is to store data for 100 days.

Data more than 100 days old is deleted.
The options on the pulldown menu for numbers of days to specify are "1, ..., 9, 10,..., 90, 100, 200, 300, 400".

4-23-4-3. Changing the backup creation folder

Click on the [...] button to display the Browse Folder screen, to change the folder in which files are saved.

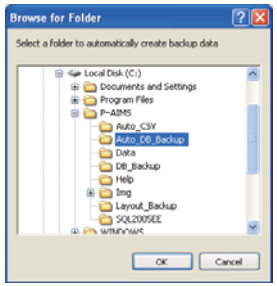

Click on the [OK] button to apply the selected save destination and return to the Automatic Backup Settings screen.

Click on the [Cancel] button to return to the Automatic Backup Settings screen without doing anything.

4-23-4-4. Registering settings

Click on the [Register] button to register the set content.

4-23-4-5. Deleting settings

Click on the [Cancel] button to delete the set content and revert to the previously registered content.

4-23-4-6. Deleting

Click on the [Close] button to close the Automatic Backup Settings screen.

* The [Cancel] and [Close] buttons change to the [Cancel] button when making settings.
  Clicking on the [Register] or [Cancel] buttons changes them to the [Close] button.
* Unless a different save folder has been specified, automatic backup files are saved to the folder named Auto_DB_Backup in the folder where the P-AIMS system was installed (e.g. C:\P-AIMS).

4-23-4-7. Troubleshooting if saving does not work

If an error occurs while the backup file is being saved, a red button marked "Auto Backup, Auto CSV ERR" is displayed in the upper right of the screen.

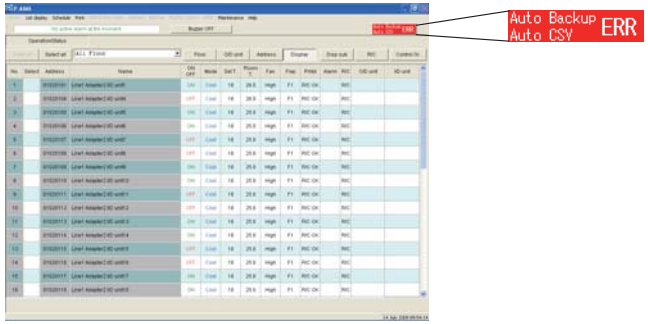

Click on the Auto Backup Auto CSV ERR button to display the "Error log of Auto_DB_Backup & Auto_CSV_Backup" screen and the content of the error.

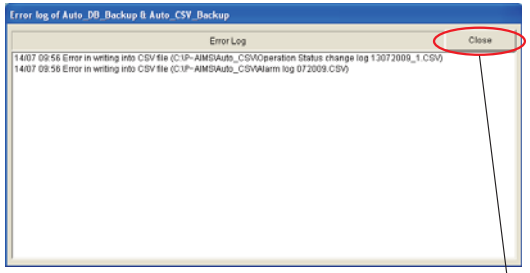

The Auto Backup Auto CSV ERR button disappears at the same time as the error is closed.

* If this button is displayed, an error may have occurred on the storage disk. Refer to the instruction manual for the device concerned and take appropriate action.

4-24. Register Event

[Procedure]
On the menu bar, select "Maintenance" – "Register event".
(Password level 2)

Register event processes for automatic control. Linked control will be performed according to the input conditions.

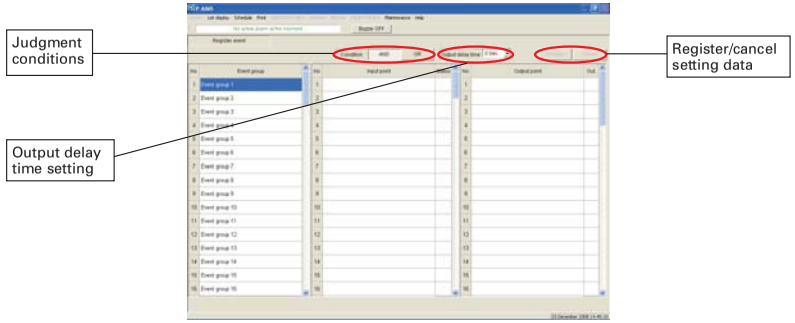

condition AND OR	:Register settings.
Output delay time 0 Sec.	:Set the delay time for output.
Register	:Register settings.
Cancel	:Revert to the previously registered state.

Key

Event group
- · Event group :Displays event group names.

Input point
- · Input point :Specifies the input device.
- · Status :Sets the On/Off status.

Output point
- · Output point :Specifies the output device.
- · Out. :Turns output On/Off.

4-24-1. Display method

4-24-1-1. Event group display

Click on an event group name to display conditions related to the event control group, such as input point, status, output point, output, judgment conditions and output delay time.

4-24-2. Registering event groups

4-24-2-1. Changing event group names

Double click to change the name of an event group. It is also possible to change part of the name of a previously-registered event group. To change the entire name, just type in the name. The existing name will be deleted and the new name displayed.

Once the name has been changed, click on the Register button to register it. Click on the Cancel button to revert to the previously registered state.

> * When the name is changed, it becomes impossible to change the input point, status, output point, output, judgment conditions, output delay time, and other settings. Click on the Register button after changing the name to register it. Changes in other settings will then become possible, so register again after any further changes.

4-24-2-2. Changing the input point

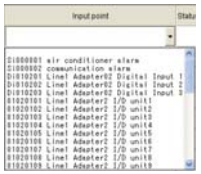

Set conditions for the input device.
Click in the input point box to display the button, then click on it. A list of input devices is displayed, so select the relevant device.

* Select the blank at the top of the list to delete the input point.

4-24-2-3. Changing status

Click in the Status box to display the button, then click on it.
A list is displayed for selecting On or Off, so specify the condition for the input device.

* If the input point is deleted and the change registered, the item concerned is automatically deleted.

4-24-2-4. Changing the output point

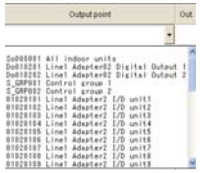

Set conditions for the output device.
Click in the Output Point box to display the button, then click on it. A list of output devices is displayed, so select the relevant device.

* Select the blank at the top of the list to delete the output point.

4-24-2-5. Changing output

Click in the Output box to display the button, then click on it.
A list is displayed for selecting On or Off, so specify the condition for the input device.

* If the output point is deleted and the change registered, the item concerned is automatically deleted.

4-24-2-6. Setting judgment conditions

condition | AND | OR : AND condition is applied. When multiple input points have been set and the status of all input points is satisfied, the event occurs and the output point is changed according to the output setting.

condition | AND | OR : OR condition is applied. When multiple input points have been set and the status of even one of the input points is satisfied, the event occurs and the output point is changed according to the output setting.

> * If there is only one input point registered, it makes no difference to the conditions whether the setting is for AND or OR.

4-24-2-7. Changing output delay time

Output delay time | 0 Sec. :Even if the input conditions are satisfied and the event occurs, output to the output point is delayed by the output delay time.

> * An adapter is used for communications with the input and output devices, so such disturbances as communications delays may occur, and the actual delay time may exceed the one set.

4-24-2-8. Registering changed data

Click on the Register button to register changes. All changed data is registered.

4-24-2-9. Deleting settings

Click on the Cancel button to revert to the previously registered state.

4-24-3. Change confirmation

If you have changed event content and attempt to switch to another screen without first saving the changes, the change confirmation message is displayed.

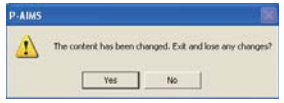

Click on the Yes button to discard changes and switch screens.
Click on the No button to repeat the operation on this screen.

4-25. Register I/D unit upper/low-limit temperature

[Procedure]
On the menu bar, select "Maintenance" – "Register I/D unit high/low-limit temperature".
(Password level 2)

Set upper and lower limit temperatures to restrict the set temperatures of indoor units.

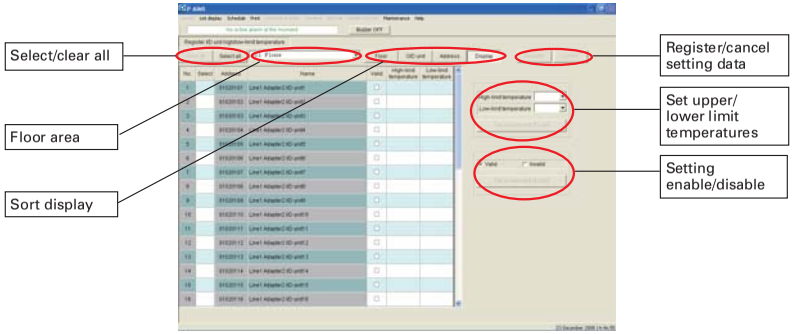

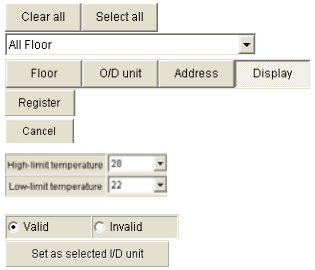

:Use to clear all and select all.
:Use to select floor areas.
:Use to select the display order.
:Register settings.
:Revert to the previously registered state.

:Select the upper limit temperature/lower limit temperature.
:Set enabled/disabled.
:Apply the set values of upper limit temperature/lower limit temperature. Or, apply the enabled/disabled settings.

Key

· Select	:Selects the indoor unit to control. Click to add a check mark.
· Address	:Displays the address numbers of indoor units.
· Name	:Displays the names of the indoor units.
· Valid	:Sets enabled/disabled.
· High limit temperature	:Displays the upper limit temperatures of indoor units.
· Low-limit temperature	:Displays the lower limit temperatures of indoor units.

4-25-1. Display method

4-25-1-1. Selecting displayed floor and area

If the floor and area is "All", all registered indoor units are displayed. Click on the button on the right edge of the floor selection list to display a list of registered floors and areas.
From the list, select the floor or area to monitor. A list of indoor units registered within that floor and area is displayed.

4-25-1-2. Sorting lists

Click on the Sort button to change the display order of a list. The currently pressed button is the one which determines the sort order.

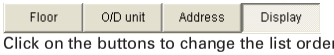

Click on the buttons to change the list orders. If other buttons are pressed, the one that was clicked last is effective. The illustration above shows the list displayed in the indoor unit master order.

Floor	:Display is in order of floor name registration.
O/D unit	:Display is in ascending order of outdoor unit addresses.
Address	:Display is in ascending order of addresses.
Display	:Display is in order of most recent registrations to the indoor unit master.

* Any button can be selected. It is not possible to select multiple buttons at the same time.

4-25-2. Control method

4-25-2-1. Indoor unit selection method

To set the upper and lower limit temperatures, first click on the name of the target indoor unit. The selected locations have ✓ check marks in the selection column. Click again on the same location to remove the check mark, canceling the selection.
To select all indoor units, click on the Select all button in the upper left of the screen.
To cancel selections of all indoor units, click on the Clear all button in the upper left of the screen. The Clear all button cannot be used if nothing has been selected.
It is possible to select or deselect multiple indoor units by dragging around them with the mouse.
Unconnected units cannot be selected.

4-25-2-2. Setting upper and lower limit temperatures

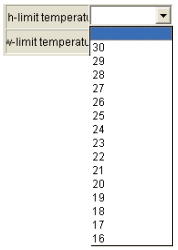

To select upper and lower limit temperatures, click on the button to display the pulldown menu, then select a temperature in the range 16 – 30. Click on the desired temperature.
The temperature you clicked on is selected. Select the lower limit temperature in the same way. Once both the upper and the lower limit temperatures are set, click on the Set as selected I/D unit button. The upper and the lower limit temperatures are applied to all selected indoor units.

4-25-2-3. Enable/disable settings

To set enable/disable, click on either item to add a mark to it.

After setting enable/disable, click on the Set as selected I/D unit button. The selection is applied to all selected indoor units.

4-25-3. Saving changed data

If the upper or lower limit temperatures, or the enabled status, have been changed, click on the Register button in the upper right of the screen to save the settings. All changed data is saved.

Click on the Cancel button to return all changed data to its previous state.

* The Register and Cancel buttons become available once upper/lower limit, and enabled status are set.
* If the Cancel button is clicked, the settings revert to their values before the edit.

4-25-4. Change confirmation

If you have changed the scheduled operation times and attempt to switch to another screen without first saving the changes, the change confirmation message is displayed.

Click on the Yes button to discard changes and switch screens.
Click on the No button to continue using this screen.

4-26. Exit

[Procedure]
On the menu bar, select “Maintenance” – “Exit”.
(Password level 2)

Exit the system.

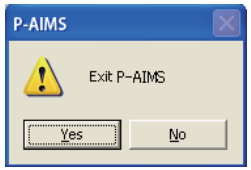

Click on the Yes button to exit the system.
Click on the No button to avoid exiting the system.

5. Supplementary Information

■ Powering the system off

Always use the following procedure to power the PC off.

1. From the Menu bar, select “Maintenance” - “Exit”.

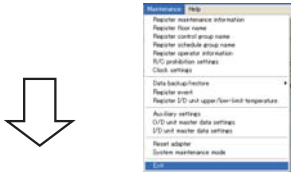

2. The Password Input screen is displayed. Input the password.

3. The System Exit screen is displayed. Click on the Yes button.

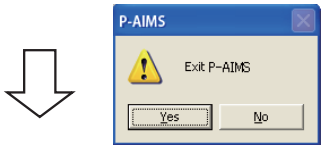

4. Click on the start button in the lower left of the screen, then on .

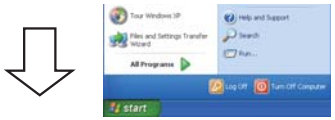

5. The “Turn Off Computer” screen appears. Click on “Turn Off”.

6. The shutdown process begins. After some time, the PC will switch off*, so turn the LCD screen off as well.
   *Several minutes may pass.

7. If the system is equipped with a UPS (uninterruptible power supply), turn it off at that stage.

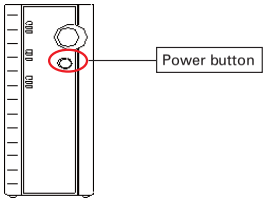

■ Limitations on changing settings
Some types of air conditioners are limited in the settings which they support. For example, cooling-only air conditioners cannot be set to heating. Floor-type models typically support only high fan speeds. Ceiling mounted models do not have flaps, and therefore cannot change the fan direction.
You should be aware of the limitations of the air conditioner models in your system.
For more information, contact your dealer or service provider.

■ Personal Computers
Use a personal computer exclusively for the P-AIMS System.
Sharing the PC with any other system could cause problems.

■ Data backup
The PC used with the P-AIMS System could break down, so you are advised to back up data to an external hard drive or other storage.
For more information, contact your dealer or service provider.
Caution: If the drive name of the external hard disk or other backup location changes, backups cannot be done.

■ Power outages
We recommend use of a UPS device (uninterruptible power supply) to protect the P-AIMS in the event of a power outage.
For more information, contact your dealer or service provider.

■ Please note that we will not provide compensation in the following circumstances:
Any fault caused by a third party becoming aware of a password.
Any fault caused by sharing a PC between P-AIMS and another application.

- Only alarm codes are displayed in the notification bar and alarm log display.
  The content of an alarm can vary for different models, even if the alarm code is the same.
  Consult the documentation of the various models to determine the content of the alarm.
- After the settings of an indoor unit are changed from the P-AIMS System, the display may revert temporarily to the former settings. This is more likely to occur with all-unit operations. The cause is communications delay, not any malfunction in the system. If you wait a few minutes, the display will show the correct information.
- Errors occurred while operating during a thunder storm or because of electromagnetic interference.
- Power the P-AIMS System off and then on again.
  As a rule, the system should be powered off only in cases such as the above.
  Correct management of air conditioning is not possible when the system is powered off.
- Setting the current date and time
  The current date and time should be set on a regular basis, since the PC clock can gain or lose up to about two minutes per month.
- Passwords
  Passwords should be recorded and saved in a safe place. They should never be disclosed to third parties.
  If you forget your password, contact your dealer or service provider.
- Interface adaptors (sold separately)
  - Alarm display
    Alarm details are not shown. The display is “C12”. (meaning local adapter all-unit alarm)

  Interface adaptors (CZ-CAPC2)
  You can use Interface adaptors to connect equipment that can be turned on and off (fans, room air conditioners and so on) to the system.
  However, note that the following limitations apply.
  For details, refer to the documentation of the equipment or contact your dealer or service provider.
  - Central control is supported for the following operations only.
    ·On/Off
    ·Remote control prohibition (start/stop only)
    Timer settings are supported, but settings other than “start/stop” and “remote control prohibition” are ignored.
    Remote control prohibition is possible only when prohibition signal output from the local adaptor has been connected to the equipment.
    Even in this case, the only operations that can be prohibited are start and stop.
  - Alarm display
    Alarm details are not shown.
    The display is “C12”. (meaning Interface adaptor all-unit alarm)
    However, this is possible only when the alarm signal input has been connected to a local adaptor.
  - As long as it conforms to the contact specifications of the Interface adaptors, any type of equipment can be connected to the system. However, you should avoid connecting equipment whose operation can have grave consequences for life or property.

6. License Certification

Before you can use the P-AIMS system, you need to first perform a work procedure called "license certification."

To perform license certification, make an inquiry by sending the inquiry key to the inquiry e-mail address below. You will be registered as a user and issued a release key, and then receive a reply.

<Contact Information>
Product ID Issuance Desk,

E-mail address: cmc_productid_desk@gg.jp.panasonic.com

When you make an inquiry, send the following information together with the inquiry in order to be registered as a user and issued a release key.
(1) Product name
(2) Company name/contact person
(3) Phone number
(4) E-mail address
(5) Inquiry key

* If you do not input a release key, you will no longer be able to use the system after 30 days elapses. Obtain a release key and perform license certification as soon as possible. * Make an inquiry as soon as possible because it may sometimes take several days to be issued a release key.

License Certification Procedure

The procedure from after the P-AIMS system is installed up until the end of license certification is described below.

(1) Check the inquiry key from the License Certification screen.

(2) Send the inquiry key to the Product ID Issuance Desk (cmc_productid_desk@gg.jp.panasonic.com).
Also notify us of the product name, company name/contact person, phone number, and e-mail address.

(3) A release key is issued.
You are registered as a user and a release key is issued. A reply is sent to the registered mail address.

(4) Input the release key from the License Certification screen.

(5) The license certification procedure is finished.

Performing License Certification

1. A License Certification screen such as the following appears when you start a P-AIMS systems for which license certification is not finished.

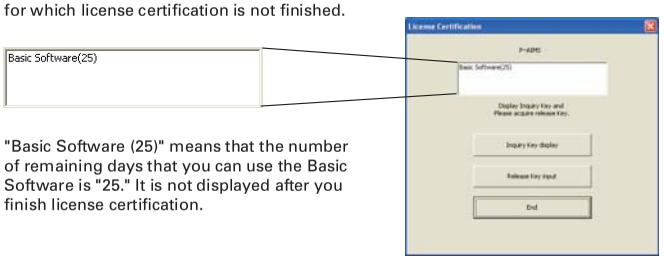

"Basic Software (25)" means that the number of remaining days that you can use the Basic Software is "25." It is not displayed after you finish license certification.

> * After you start a P-AIMS system for which license certification is not finished, the License Certification screen will appear at 9:00 a.m. and 3.p.m. This screen is not displayed after you finish license certification.
> If you install optional software, the License Certification screen will appear until license certification is finished for all of the software.

2. If you click the Inquiry Key display button in the License Certification screen, the Inquiry Key display screen appears, and the inquiry key is displayed in the screen.
Send the key displayed in this screen to the Product ID Issuance Desk (cmc_productid_desk@gg.jp.panasonic.com) by e-mail.
At the same time, also notify us of the following items.
   (1) Product name (required)
   (2) Company name/contact person
   (3) Phone number
   (4) E-mail address (required)
You will be registered as a user and issued a release key.

Preservation :Clicking this button saves the inquiry key as a text file. Follow the instructions on the screen to save the text file. Enter the product name, company name/contact person, phone number, and e-mail address in this saved text file, and send the text file to the Product ID Issuance Desk by e-mail.

Copy :Clicking this button copies the inquiry key to the Windows clipbord. Paste the inquiry key into your mail.

OK :Clicking this button closes the Inquiry Key display screen.

3. When you receive the release key, restart the P-AIMS system. See "2. Startup and shutdown" for how to restart the P-AIMS system, and then restart the system.

   If license certification is not finished for the P-AIMS system, the License Certification screen on the right appears before the P-AIMS system restarts.

   Click the Release Key input button to display the Release Key input screen, and enter the release key.

> * If you install multiple P-AIMS system software, the same number of license certifications is required. In such a case, the number of release keys sent will be the same as the number of inquiry keys.
> Enter all of the received release keys sequentially, and perform license certification. (There is no set order for entering release keys, so they can be entered in any order.)

License certification is finished once all of the release keys have been entered.

Click the End button. The License Certification screen closes, and the P-AIMS system starts.

> * The P-AIMS system will start even if you click the End button without entering the release key. You can use the system as is until license certification is finished. (The system can be used for a period of 30 days.)

7. Basic Software Installation

1. Insert the Basic Software CZ-CSWKC2 CD of the P-AIMS system you purchased into the CD-ROM drive.
   Installation starts automatically when you insert the CD. If installation does not start, double-click “Setup.exe“ on the CD-ROM drive to start it.
   Enter the Product ID in the Input Product ID screen that appears.
   For the Product ID, see the “Product ID Issuance Certificate“ supplied with the software.

> * Keep the “Product ID Issuance Certificate“ in a safe place. The Product ID is required to install the P-AIMS system. The “Product ID Issuance Certificate“ will not be reissued.

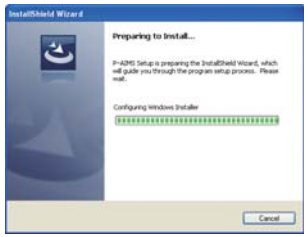

2. The InstallShield(R) Wizard prepares to install the P-AIMS system.

3. After a short while, the "The InstallShield(R) Wizard will install P-AIMS on your computer. To continue, click Next. " message appears. Click the [Next >] button.

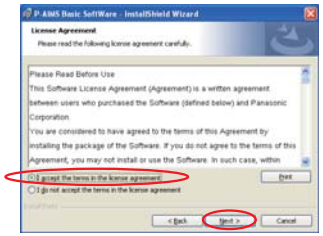

4. Next, the License Agreement screen appears. Carefully read the license agreement, and click "I accept the terms in the license agreement" if you agree to the terms of the license agreement.
   The [Install] button becomes active.
   Click the [Next >] button. (The software cannot be installed if you do not agree to the terms of the license agreement.)

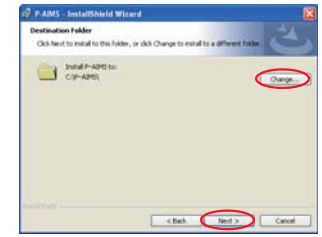

5. A screen for changing the folder to install the P-AIMS system in appears.
   - If you want to change the folder, click the [Change...] button. A screen for selecting the installation folder appears.
   - If you do not want to change the folder, click the [Next >] button.

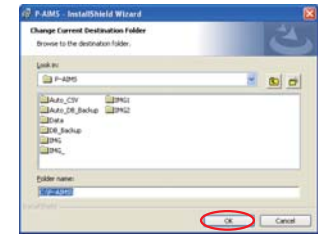

To change the folder, specify a folder and click the [OK] button. The specified folder is displayed and the previous screen is redisplayed.

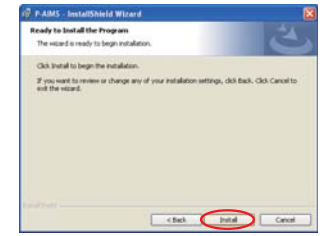

6. Click the [Install] button to begin the installation of the P-AIMS system.

Please wait a while.

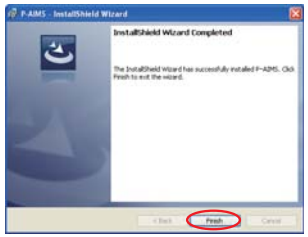

7. When the P-AIMS system setup is finished, the installation complete screen appears. If you click the [Finish] button, the initial settings of the P-AIMS system are configured.

8. When the initial settings are finished, click the [OK] button in the "Completed installation of P-AIMS" screen that appears.
The installation is now finished.

9. When the installation is finished, registration of the P-AIMS shortcut to the desktop and registration to the Start menu take place.

10. From now on, you can start the P-AIMS system by double-clicking this shortcut.

8. Troubleshooting

Before requesting service, check the following items.
Do not attempt to service the system yourself. Doing so can be dangerous.

Symptom	Cause
There is no screen display, even when the PC is switched on.	· Is the power cord connected? · Is the power switch turned On?
Scheduled operation does not work well.	· Is there a schedule mode or time setting? Even if schedule mode and time settings are made, schedule operation is not possible without confirmation. · Does the setting match the current date and time? If the date and time do not match, operation can start at an unexpected time.
The power goes off at odd times.	· The screen may be blank because of the power-saving auto off function. In this case, the power is not switched off, so move the mouse or press any key.
An error message has appeared in the alarm display area in the upper left of the screen, and does not disappear.	· The message displays the unit number where the alarm occurred, and other information such as content and number of the alarm. Inform your dealer or service provider about the content of the message.
It takes a long time after an operation for the screen to be updated.	· A certain amount of time may be required depending on the state of communications with the connected air conditioners. Please wait until all of the information is received.
While local remote control operation is prohibited on the P-AIMS system, P-AIMS has malfunctioned and become unable to start/stop operation of air conditioners.	· As an ad hoc measure until the service engineer arrives, turn the P-AIMS system off, then turn the power of the indoor unit on again. Operation with the local remote control will be possible. However, this cannot be done in a system without remote control.
After a power outage, the devices do not reset automatically after power is restored.	· The system does not power on equipment automatically after a power outage. The setting for the next programmed schedule will be executed when the time arrives.

9. Afterservice

Please be sure to read this section.

If you have any questions or repair-related consultations
Please consult your dealer about repairs or any questions.
Relocation
⚠ **Warning** Specialist skills are required, so always consult your dealer. Necessary expenses for relocation are to be borne by the customer.

User memo space

If you fill this out at the time of purchase, it is convenient when ordering repairs etc.

Serial No.	
Date of installation	
Dealer	Telephone No. ( )

Operation Manual

Air Conditioning
Intelligent Management System

CZ-CSWAC2

Distribution Ratio Software

Operation Manual

Air Conditioning
Intelligent Management System

CZ-CSWAC2

Distribution Ratio Software

P-AIMS

Thank you for purchasing our monitoring and control system.
Before using the system, be sure to read this manual carefully. After reading it, store it, in a convenient location for easy reference.

Contents

Precautions on Using This Product i
1. Introduction 1
2. Startup and exit 2
3. Quick reference 3
4. Using the system 4
5. Supplementary Information 39
6. License Certification 43
7. Preparation 46

Reference 49

Contents

Precautions on Using This Product i

1. Introduction 1

2. Startup and exit 2
2-1. Startup 2
2-2. Exit 2

3. Quick reference 3

4. Using the system 4
4-1. Print 4
4-1-1. Print screen 4
4-1-2. Excel output 4
4-1-3. Setting for automatic Excel output 5
4-1-3-1. Settings for saving the operation/status log 5
4-1-3-2. Settings for saving the alarm log 6
4-1-3-3. Settings for saving distribution ratio data 6
4-1-3-4. Changing the CSV file creation folder for automatic Excel output 7
4-1-3-5. Registering settings 7
4-1-3-6. Deleting settings 7
4-1-3-7. Deleting 7
4-1-3-8. What to do when data could not be saved 8
4-2. Operation time with thermostat on 9
4-2-1. Display method 11
4-2-1-1. Selecting the display type 11
4-2-1-2. Sorting lists 11
4-2-1-3. Detailed display with thermostats off 12
4-2-1-4. How to specify the display range term 12
4-2-1-5. Specifying the time range 13
4-2-1-6. Excel output 13
4-3. Distribution ratio calculation 15
4-3-1. Screen display 15
4-3-1-1. Simple distribution 15
4-3-1-2. Load distribution 17
4-3-2. Display method 19
4-3-2-1. Selecting the display type 19
4-3-2-2. How to specify the display range term 19
4-3-2-3. Specifying the time range 20
4-3-3. Printing 20
4-3-3-1. Print screen 20
4-3-3-2. Excel output 20
4-3-3-3. Print list 21
4-3-3-4. List print preview 21
4-4. Accumulated value 23
4-4-1. Display method 25
4-4-1-1. Selecting the display type 25
4-4-1-2. Term setting (term total value) 25
4-4-1-3. Display selection for the gas calculation method 26
4-4-2. Changing the meter value 26
4-4-3. Printing 27
4-4-3-1. Print screen 27
4-4-3-2. Excel output 27
4-5. Distribution ratio setting 28
4-5-1. Setting distribution method 28
4-5-1-1. Selecting distribution method 29
4-5-1-2. Settings for simple distribution 29
4-5-1-3. Settings for load distribution 29
4-5-2. Editing specified day 30
4-5-2-1. Changing the calendar 30
4-5-2-2. Setting specified day 30
4-5-3. Setting the regular hour range settings 30
4-5-3-1. Setting enable/disable for the regular hour range 30
4-5-3-2. Setting times for Regular hour 30
4-5-4. Setting accumulated data 30
4-5-4-1. Setting the cut-off day 30
4-5-4-2. Setting conversion factor 31
4-5-5. Registering unit prices 31
4-5-5-1. Registering Price rate of electric power 31
4-5-5-2. Registering Price rate of gas cost 31
4-5-6. Registering settings 31
4-5-6-1. Registering settings 31
4-5-6-2. Deleting settings 31
4-5-6-3. Deleting 31
4-6. Register distribution group name 32
4-6-1. Editing distribution groups 33
4-6-1-1. Editing distribution group names 33
4-6-1-2. Enabling/disabling registration 33
4-6-1-3. Registering display orders 33
4-6-2. Saving and revising edited distribution groups 33
4-6-3. Change confirmation 33
4-7. Register tenant name 34
4-7-1. Editing tenants 35
4-7-1-1. Editing tenant names 35
4-7-1-2. Enabling/disabling registration 35
4-7-1-3. Registering display orders 35
4-7-2. Saving and discarding edited tenants 35
4-7-3. Change confirmation 35
4-8. Indoor unit settings 36
4-8-1. Registering indoor units 37
4-8-1-1. Registering tenants 37
4-8-1-2. Registering distribution groups 37
4-8-1-3. Registering electric heater capacities 37
4-8-1-4. Registering indoor fans 37
4-8-1-5. Registering fixed capacities 37
4-8-1-6. Enabling/disabling registration 37
4-8-2. Saving and discarding edited indoor unit settings 38
4-8-3. Change confirmation 38

5. Supplementary Information 39

6. License Certification 34

7. Preparation 36
7-1. Installation 36
7-2. Display after restart 38
7-3 Settings 38

Reference 49

16. Intelligent Management System

Note

■ Precautions on Using This Product

★IMPORTANT★

- Before you can use the P-AIMS system, you need to first perform a work procedure called "license certification."
  Please perform the license certification referring to "6.License certification".
- Duplication of all or part of this software and documentation without the express consent of the holder of the rights to the above, and transfer of the software to another party, are prohibited by law.
- This software and manual are not to be reproduced, in whole or in part, without permission.
- In principle, each set of this software is purchased for use on a single computer.
- Please note that we bear no responsibility for any effects resulting from the use of this software and manual.
  Panasonic will not be liable for any claim based on errors in calculations of distribution ratios and utility usage caused by faults in this equipment or software.
- The specifications of this software, and the content of this manual, are subject to change without notice, for the sake of improvement.
- This software is used to calculate distribution ratios and charges according to the load ratios estimated for each indoor unit.
  It is not based on the Measurement Act, so it cannot be used for public transactions and similar purposes.
- The content of this manual is limited to explanation of how to use this software.
  It does not cover the usage methods for the operated machinery and optional features, or for the OS etc., so refer also to the relevant manuals for those elements.
- The screen image examples presented in this manual are intended to illustrate the explanation of layouts, and do not represent actual operating conditions. The tenant names displayed are also fictional.
- Displays and operations may differ from the examples in this manual, depending on versions of Excel and the OS used.
- Refer to "Please Read Before Use" for the warranty terms for this software.
- Panasonic will not be liable for any violation of the rights of any third party stemming from use of information in this manual, or for violation of other rights.
- Microsoft, Windows XP and Microsoft Excel are trademarks of Microsoft Corporation in the United States and other countries.
  Other product names are trademarks or registered trademarks of the corresponding companies.
  Other products are copyrights of the corresponding companies.

1. Introduction

This distribution ratio software (referred to below as "the system") is intended to calculate distribution ratios, total values and charges in Air Conditioning Intelligent Management System (referred to below as the P-AIMS system).

This system is installed on the personal computer which runs the P-AIMS System (basic software).
It gathers data for each distribution group and tenant name, and calculates distribution ratios.

Data can be output as CSV files, which are readable by Microsoft Excel. Automatic output timing can be coordinated with the monthly cut-off day, but output is possible at any time.

2. Startup and exit

2-1. Startup

1. Double click on the P-AIMS shortcut on the desktop.

The window below appears. The system starts up and the Status/Operation screen is displayed.

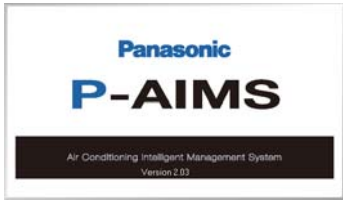

2-2. Exit

1. From the Menu bar, select “Maintenance” - “Exit”.

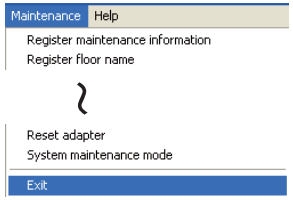

2. The Password authority 2 screen is displayed. Input the password.

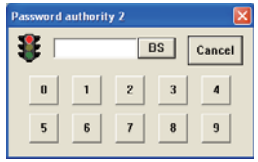

3. The System Exit screen is displayed. Click on the Yes button.

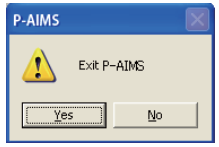

3. Quick reference

Menu List

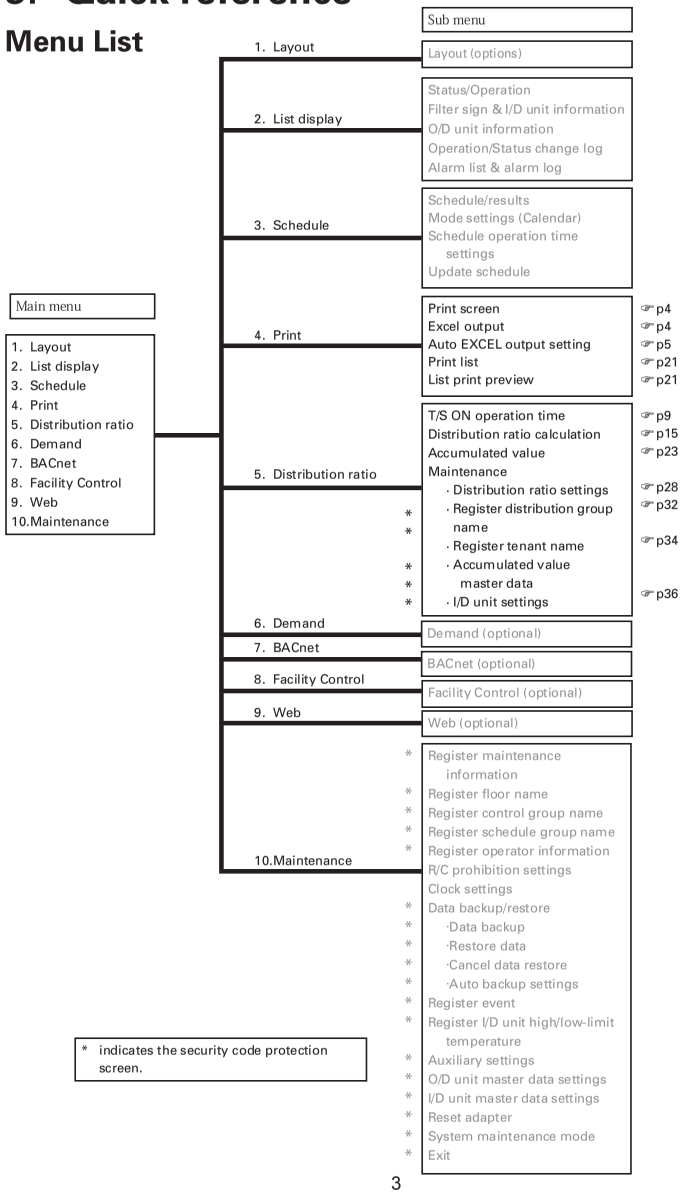

4. Using the system

4-1. Print

4-1-1. Print screen

[Procedure]
On the menu bar, select “Print” - “Print screen”.

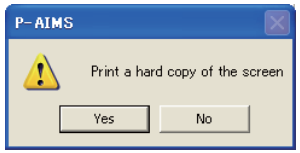

Print the currently-displayed screen.
This menu cannot be selected on screens that cannot be printed.

Click on the Yes button to print the screen.
Click on the No button to exit without printing.

4-1-2. Excel output

[Procedure]
On the menu bar, select “Print” – “Excel output”.

Currently displayed data can be saved as a file in CSV format, which can be displayed by Microsoft Excel and similar applications. The data currently displayed on the screen becomes the file, so make sure the data to place in the file is displayed on the screen.

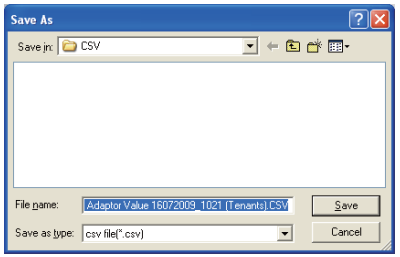

The file name is assigned automatically.

TS ON Adaptor Value 16072009 _ 1021(Tenants).CSV
Name DDMMYYYY hhmm

* This file is for T/S ON Adaptor Value.

Click on the Save button to save the file to the folder specified under "Save in".
Click on the Cancel button to exit without saving.

* Unless a different save folder has been specified, the saved file is saved to the folder Auto_CSV in the folder to which the P-AIMS system was installed (e.g. C:\P-AIMS).

4-1-3. Setting for automatic Excel output

[Procedure]
On the menu bar, select “Print” - “Auto EXCEL output setting”.
(Password level 1)

"Operation/Status change log" and "Alarm log" can be saved automatically, every day, in CSV format, which can be displayed in Microsoft Excel. Data is saved after midnight, so the data up to the previous day can be checked.

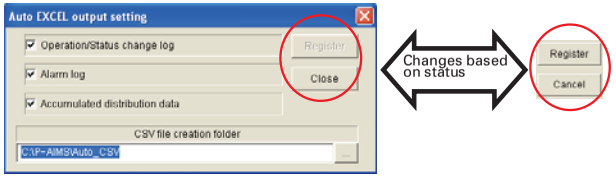

Operation/Status change log	:Specify the file to save the Operation/Status change log to.
Alarm log	:Specify how to save the alarm log files.
Accumulated distribution data	:Specify how to save files related to distribution ratios.
Register	:Registers the set content.
Cancel	:Reverts to the previously registered content.
Close	:Closes the window.
...	:Changes the backup creation folder.

4-1-3-1. Settings for saving the operation/status log

To automatically save the "Operation/status change log" file, click on Operation/Status change log, and add the check mark. Saving is enabled with the check mark added.
Click again to remove the check mark.
The file name is assigned automatically. (Files are saved for each date).

Operation status change log 15072009 1.CSV
Name DDMMYYYY Serial number

(* The serial number increments to 2 when there are over 60,000 items for the first file. Up to 400,000 items can be saved per day).

4-1-3-2. Settings for saving the alarm log

To automatically save the "Alarm log" file, click on Alarm log, and add the check mark. Saving is enabled with the check mark added. Click again to remove the check mark.
The file name is assigned automatically. (Files are saved in one-month units).

Alarmlog 072009.CSV
Name MMYYYY

4-1-3-3. Settings for saving distribution ratio data

To automatically save the "Distribution ratio-related" files, click on Accumulated distribution data, and add the check mark. Saving is enabled with the check mark added. Click again to remove the check mark.
The file name is assigned automatically.

Accumulated value Total value 14062009 to 13072009.CSV
Name Start date Cut-off date *1

Accumulated value Adaptor value 16072009 _ 1026.CSV
Name DDMMYYYY hhmm *2

Distribution Ratio calculation (***) 14062009 to 13072009.CSV
Name Start date Cut-off date *1

Tenant total (***) 14062009 to 13072009.CSV
Name Start date Cut-off date *1

Weigh. factor balance total (***) 14062009 to 13072009.CSV
Name Start date Cut-off date *1

Balance total (***) 14062009 to 13072009.CSV
Name Start date Cut-off date *1

TS ON operation time-Adaptor Value 16072009 _ 1026.CSV
Name DDMMYYYY hhmm *2

* The (***) portion within the file name is one of four patterns: Regular hours, Out of hours, Specified day and All hours.
* *1 means that the results of collating data for one month are placed in a file, on every day after the cut-off date.
*2 means data is placed in the file every day at the time displayed in the file name.

4-1-3-4. Changing the CSV file creation folder for automatic Excel output

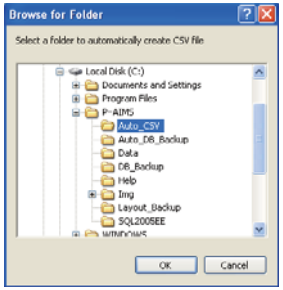

Click on the ... button to display the "Browse for Folder" screen, which can be used to change the folder in which files are saved.
Click on the OK button to apply the selected save destination and return to the Auto Backup Settings screen.
Click on the Cancel button to return to the Auto Backup Settings screen without doing anything.

4-1-3-5. Registering settings

Click on the Register button to register the set content.

4-1-3-6. Deleting settings

Click on the Cancel button to delete the set content and revert to the previously registered content.

4-1-3-7. Deleting

Click on the Close button to close the Auto Backup Settings screen.

* The Cancel and Close buttons change to the Cancel button when settings are made.
  Clicking on the Register and Cancel buttons change them to the Close button.
* Unless a different save folder has been specified, automatic backup files are saved to the folder Auto_DB_Backup in the folder to which the P-AIMS system was installed (e.g. C:\P-AIMS).

4-1-3-8. What to do when data could not be saved

If an error occurs while the backup file is being saved, a red button marked "Auto Backup, Auto CSV ERR" is displayed in the upper right of the screen.

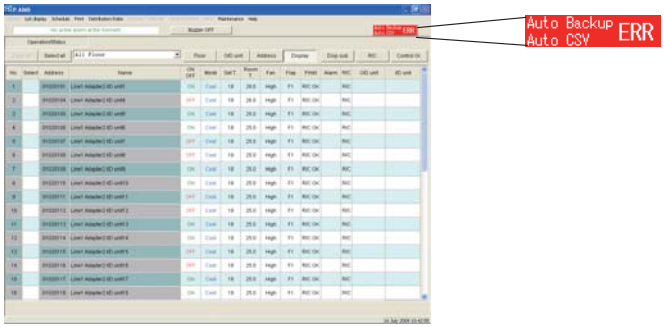

Click on the Auto Backup Auto CSV ERR button to display the "Error log of Auto_DB_Backup & Auto_CSV_Backup" screen and the content of the error.

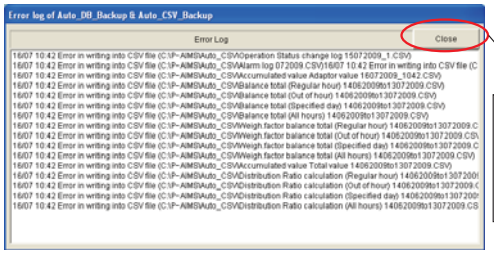

The Auto Backup Auto CSV ERR button disappears at the same time as the error log is closed.

* If this Error button is displayed, an error may have occurred on the storage disk. Take appropriate action, with reference to the instruction manual for the device concerned.

4-2. Operation time with thermostat on

[Procedure]
On the menu bar, select “Distribution ratio” - “T/S ON operation time”.

Thermostat data held by the adapter or indoor unit, or thermostat on/off times for the air conditioner are indicated. The time for each fan speed with the thermostat on is balanced in units of xx minutes, and the cumulative total of those balance values can be tabulated, as can the products of the values set for thermostat on time conversion coefficients of various settings multiplied by the fan speed conversion values.

• Adapter values
The thermostat on/off data held by each indoor unit communication adapter can be checked.

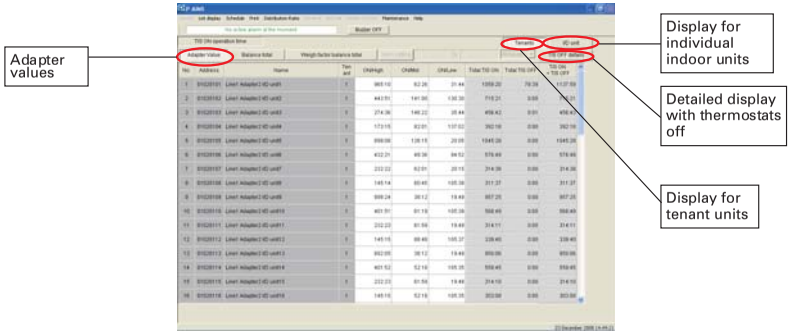

• Balance total
The balance is taken in units of xx minutes for each thermostat on fan speed held in the adapter or indoor unit, and the cumulative value of the balance values is displayed.

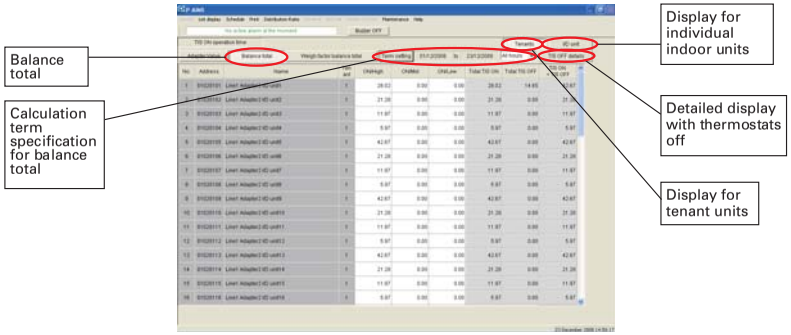

• Weighting factor balance total
The value set under Distribution ratio setting – Total data – Conversion factor, indoor unit capacity and cumulative time at each fan speed, are multiplied, then sumed up and displayed.

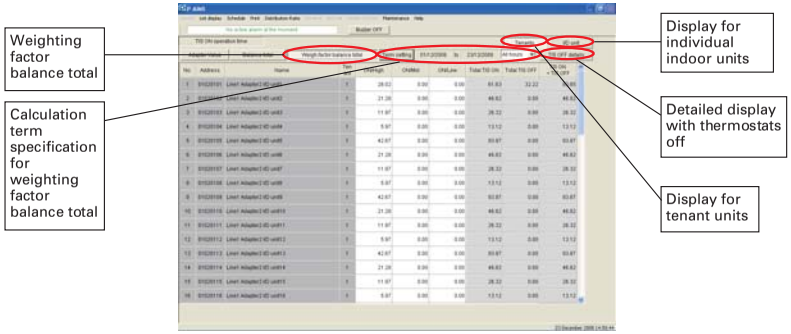

Adapter Value	:Displays thermostat times.
Balance total	:Displays thermostat time balance total values.
Weigh.factor balance total	:Displays the weighting factor balance total values for thermostat times.
Term setting	:Use to specify the term for which to display values.
Tenants / I/D unit	:Selects the display order.
T/S OFF details	:Displays details of thermostat off times.

Key

• Address	:Displays the addresses of indoor units.
• Name	:Displays indoor unit names or tenant names.
• Tenant	:Displays tenant numbers.
• ON/High	:Displays the time of operation with the thermostat on and high fan speed.
• ON/Mid	:Displays the time of operation with the thermostat on and medium fan speed.
• ON/Low	:Displays the time of operation with the thermostat on and low fan speed.
• Total T/S ON	:Displays the total time of operation with the thermostat on and high, medium and low fan speed.
• OFF/High	:Displays the time of operation with the thermostat off and high fan speed. (If thermostat off detailed display is used)
• OFF/Mid	:Displays the time of operation with the thermostat off and medium fan speed. (If thermostat off detailed display is used)
• OFF/Low	:Displays the time of operation with the thermostat off and low fan speed. (If thermostat off detailed display is used)
• Total T/S OFF	:Displays the total time of operation with the thermostat off and high, medium and low fan speed.
• T/S ON + T/S OFF	:Displays the total operation time at all fan speeds, with the thermostat both on and off.
• Electric heater ON	:Displays the time of operation with the electric heater ON.

* Use Distribution ratio – Maintenance – Indoor unit settings on the menu bar to assemble tenant groups and sort their display order.
* The fan speed conversion coefficients for weighting factor balance totals are set using Distribution ratio - Maintenance - Distribution ratio settings screen on the menu bar.
  • Weighting factor balance :The total of balances calculated from the conversion coefficients for each fan speed and the capacities of indoor units, only for thermostat On (high, medium, low fan speed) time.
  Weighting factor = (fan speed x fan speed conversion value) x indoor unit capacity
* The Adapter value display uses the same time (hhmm) as the adapter, but the Balance total and Weighting factor balance total displays use the time with minutes converted to the equivalent number of hours.
  For example 3:30 becomes 3.50. (The same is true for Excel output, so this method is used to facilitate time calculations when the data is loaded into Excel).

4-2-1. Display method

4-2-1-1. Selecting the display type

The thermostat times are displayed when the [Adapter Value] button has been clicked on and remains depressed.

The thermostat time balance total value for the specified term is displayed when the [Balance total] button has been clicked on and remains depressed.

The weighting factor balance total value for thermostat time in the specified term is displayed when the [Weigh.factor balance total] button has been clicked on and remains depressed.

* Any button can be selected. It is not possible to select multiple buttons at the same time.

4-2-1-2. Sorting lists

Click on one of the sort buttons to change the display order of a list. The currently pressed button is the one which determines the sort order.

The list is displayed in tenant units when the [Tenants] button has been clicked on and remains depressed.

The list is displayed for individual indoor units when the [I/D unit] button has been clicked on and remains depressed.

Click on the buttons to change the list orders.

* Any button can be selected. It is not possible to select multiple buttons at the same time.
* The order for sorting by tenant units is to display in order of tenant number.

4-2-1-3. Detailed display with thermostats off

Details of thermostat off time are displayed on the list when the [T/S OFF details] button has been clicked on and remains depressed.

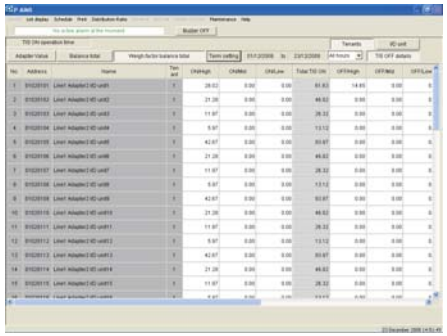

* It is possible to use this in combination with adapter value, balance total and weighting factor balance total.

4-2-1-4. How to specify the display range term

Click on the [Term setting] button to display the Term setting screen.

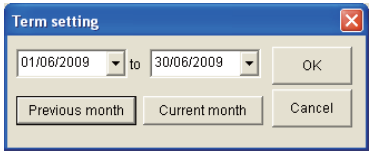

Click on the [▾] buttons on the right of the date display spaces to display the calendar.
Click on the calendar dates to select the term of data items to display.
Refer to "4-3. Calendar" in the basic software operation manual for the calendar operation method.
Specify the start and end dates.
Alternatively, click on the [Previous month] or [Current month] button.
[Previous month] : The term is set to the month leading up to the cut-off date of the preceding month.
[Current month] : The term is set to the period from the day after the preceding cut-off date to the present.
Specify the display term and click on the [OK] button to begin data collation.

No other operations can be performed during data collation.

Once data collation is complete, the balance total or the weighting factor balance total for the term is displayed.
To close the Term setting screen, click on the [Cancel] button.

4-2-1-5. Specifying the time range

Click on the button on the right of the term setting space to display the list of display types.

Select the type to display.

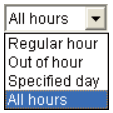

Regular hour	: The time value set as the regular hours range setting on the Distribution Ratio Setting screen.
Out of hour	: The value for time other than that set as the regular hours range setting on the Distribution Ratio Setting screen.
Specified day	: Days displayed in red on the calendar on the Distribution Ratio Setting screen. (0:00-24:00)
All hours	: All hours (including regular hours, out of hours and specified days)

Once data collation is complete, the balance total or the weighting factor balance total for the term is displayed.

* If data has been collated for a specified term, the displayed data can be switched just by changing the display type.

4-2-1-6. Excel output

Currently displayed history can be saved as a file in CSV format, which can be displayed by Microsoft Excel and similar applications.
Refer to "4-1-2 Excel output" for the operation method.
The file name is assigned automatically.

• Adapter values

TS ON Adaptor Value 16072009 _ 1056(Tenants).CSV
Name DDMMYYYY hhmm

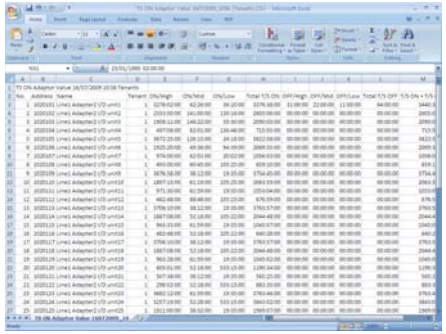

• Balance total

TS ON Balance total 14062009to13062009 (All hours, Tenants).CSV
Name Specified display term Display type

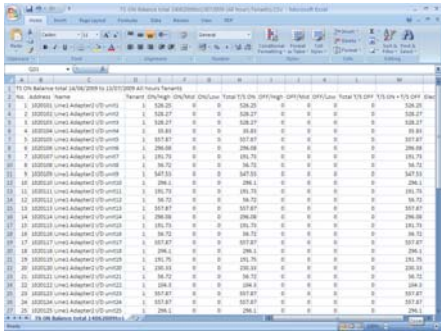

• Weighting factor balance total

TS ON Weigh.factor balance total 14062009to13072009 (All hours, Tenants).CSV
Name Specified display term Display type

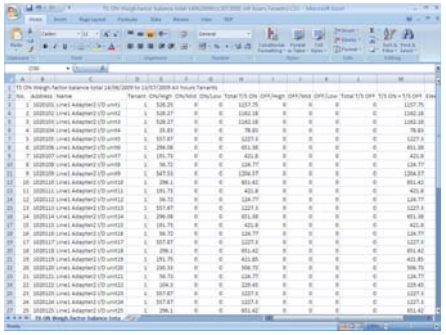

* Even if the screen display is set to display only T/S ON data, the file output as CSV will include T/S OFF data.
* The worksheet name used for Excel can have up to 31characters. If the CSV file name exceeds 31characters, it is not possible to display all of them as the worksheet name.
* In Excel, it is not possible to calculate for times exceeding 10,000 hours, so balance total and weighting factor balance total are handled as numerical values. The unit is "hours".

4-3. Distribution ratio calculation

[Procedure]
On the menu bar, select "Distribution ratio"– "Distribution ratio calculation".

The distribution ratio calculation for the air conditioner within the specified term is displayed. There are two types of distribution ratio calculation: Simple distribution and Load distribution. To switch between Simple distribution and Load distribution, select "Distribution ratio" - "Maintenance" - "Distribution ratio settings" from the menu bar and select Distrib. mode in the Distribution ratio settings dialog box.

* Simple distribution
  With simple distribution, the distribution can be set for outdoor unit electricity and for indoor unit electricity. Make settings under "Distribution ratio" - "Maintenance" - "Distribution ratio settings" on the menu bar. Gas distribution for outdoor units is performed automatically.
* Load distribution
  With load distribution, it is not possible to set electricity distributions for individual indoor units. We recommend use of simple distribution if it is necessary to distribute electricity between indoor units.

4-3-1. Screen display

4-3-1-1. Simple distribution

• Tenant calculation
If multiple distribution groups are registered for a given tenant, the same tenant name is displayed for each distribution group, so it is necessary to recalculate for each tenant. Click on the Tenant Total button to calculate for each tenant.

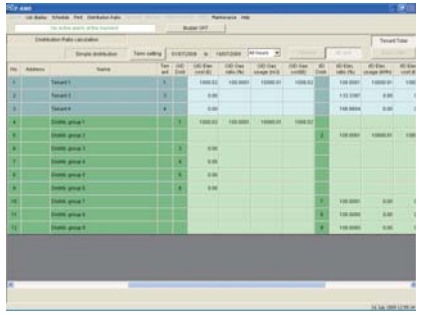

* On the Tenant Calculation screen, it is not possible to display tenant units, individual indoor units and basic data.

• Individual indoor units
Distribution ratios for electricity and gas are displayed for individual indoor units.

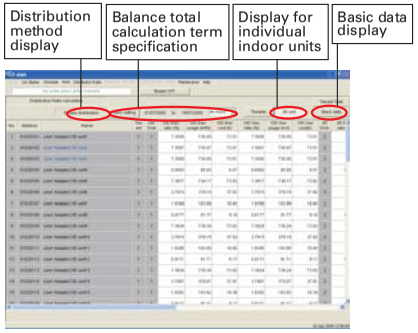

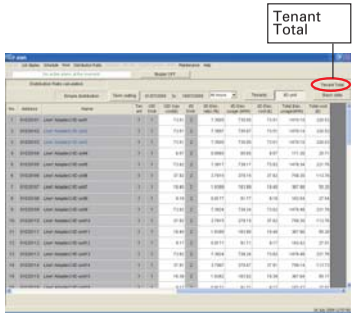

• Tenant units
Distribution ratios for electricity and gas are displayed for tenant units.

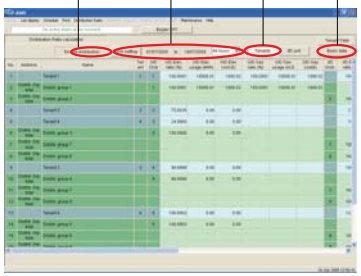

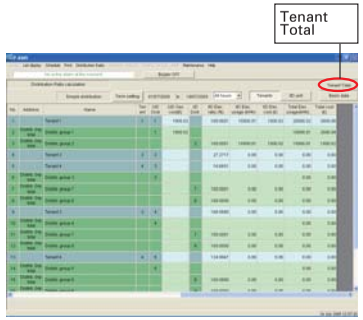

Term setting	:Use to specify the term for which to display values.
Tenant Total	:Calculate in tenant units.
Tenants / I/D unit	:Selects the display order.
Basic data	:Displays basic data.

Key
Simple distribution

	• Address	:Displays the addresses of indoor units.
	• Name	:Displays indoor unit names or tenant names.
	• Tenant	:Displays tenant group numbers.
	• O/D Distr.	:Displays distribution group numbers for outdoor units.
*1	• WF:T/S ON time	:Displays weighted thermostat On operation times. (When basic data is displayed)
*1	• WF:T/S ON/OFF	:Displays the total weighted thermostat On and Off operation times. (When basic data is displayed)
*2	• O/D Elec. ratio (%)	:When used with PAC, the distribution ratio for each distribution group is calculated on the basis of thermostat On operation time. With GHP systems, the distribution ratio for each distribution group is calculated on the basis of weighted thermostat On and Off times.
*2	• O/D Elec. usage (kWh)	:The electricity used during thermostat On time is calculated from the electricity distribution ratio.
*2	• O/D Elec. cost (£)	:The amount of electricity used is multiplied by the price rate of electric power to calculate the charge. (Calculated for charges within the same price band).
*3	• O/D Gas ratio (%)	:The distribution rate for each distribution group is calculated, on the basis of the thermostat On operation time, and displayed. (Only for GHP systems)
*3	• O/D Gas usage (m^3)	:The amount of gas used is calculated from the distribution ratio within the thermostat On operation time. (Only for GHP systems)
*3	• O/D Gas. cost (£)	:Calculated by multiplying the gas usage by the price rate of gas. (Calculated for charges within the same price band).

*4 • I/D Distr :Displays distribution group numbers for indoor units.
*4 • I/D Elec. ratio (%) :The distribution ratio for each indoor distribution group is calculated on the basis of weighted thermostat On and Off times.
*4 • I/D Elec. usage (kWh) :The electricity used during thermostat On time is calculated from the indoor electricity distribution ratio.
*4 • I/D Elec. cost (£) :The amount of electricity used indoors is multiplied by the price rate of electric power to calculate the charge.(Calculated for charges within the same price band).
*4 • Total Elec. Usage (kWh) :The total electricity used by the outdoor units and indoor units is displayed.
• Total cost (£) :The total of the electricity charge and gas charge is displayed.

*1: This is displayed when the Basic data button is pressed.
*2: This is displayed when Yes is selected for Outdoor electricity distribution under Distribution ratio settings.
*3: This is displayed if GHP is used.
*4: This is displayed when Yes is selected for Indoor electricity distribution under Distribution ratio settings.
* Use "Distribution ratio" - "Maintenance" - "I/D unit master data settings" screen to assemble the indoor unit included within tenant groups.

4-3-1-2. Load distribution

• Tenant calculation
If multiple distribution groups are registered for a given tenant, the same tenant name is displayed for each distribution group, so it is necessary to recalculate for each tenant. Click on the Tenant Total button to calculate for each tenant.

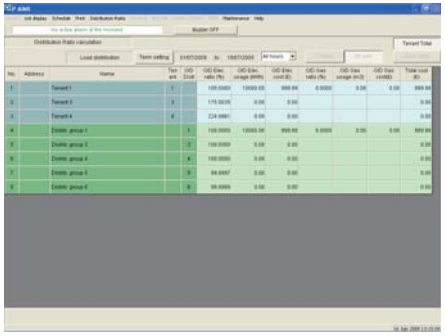

• Individual indoor units
Distribution ratios for electricity and gas are displayed for individual indoor units.

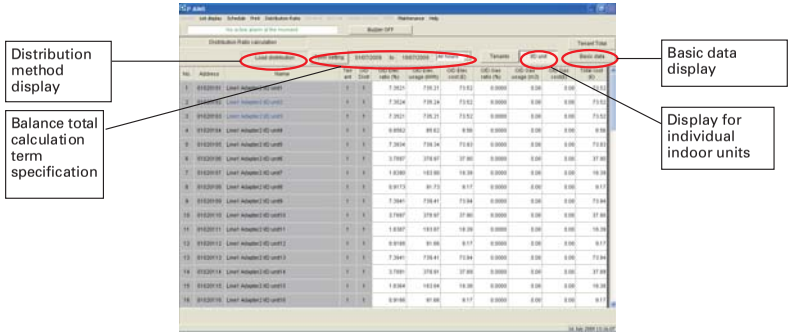

• Tenant units
Distribution ratios for electricity and gas are displayed for tenant units.

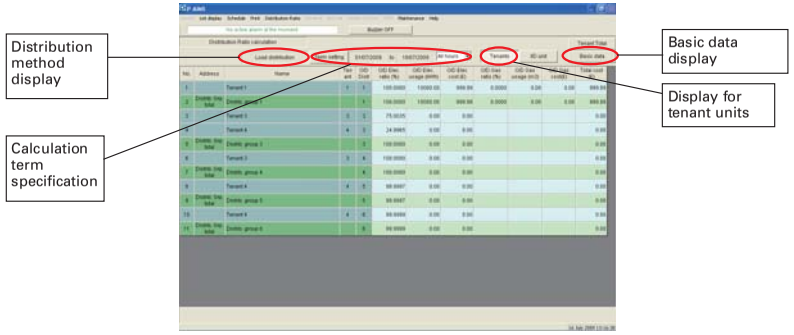

Term setting :Use to specify the term for which to display values.
Tenant Total :Calculate in tenant units.
Tenants / I/D unit :Selects the display order.
Basic data :Displays basic data.

Key
Load distribution
• Address :Displays the addresses of indoor units.
• Name :Displays indoor unit names or tenant names.
• Tenant :Displays tenant group numbers.
• O/D Distr :Displays distribution group numbers for outdoor units.
*1 • Electric operation :Displays the electrical operation capacity.
*1 • Gas operation capacity :Displays the gas operation capacity.
• O/D Elec ratio (%) :Distribution ratios are calculated for each distribution group, based on the load distribution specification of each PAC Espa, PAC Multi and GHP.
• O/D Elec usage (kWh) :The electricity used during thermostat On time is calculated from the electricity distribution ratio.
• O/D Elec cost (£) :The amount of electricity used is multiplied by the price rate of electric power to calculate the charge. (Calculated for charges within the same price band).
*2 • O/D Gas ratio (%) :Distribution ratio for each distribution group are calculated on the basis of load distribution specifications. (Only for GHP systems)
*2 • O/D Gas usage (m^3) :The amount of gas used is calculated from the gas distribution ratio. (Only for GHP systems)
• O/D Gas cost (£) :Calculated by multiplying the gas usage by the price rate of gas. (Calculated for charges within the same price band).
• Total cost (£) :The total of the electricity charge and gas charge is displayed.

*1: This is displayed when the Basic Data button is pressed.
*2:This is displayed if GHP is used.
* :Use Distribution ratio - Maintenance - I/D Unit Settings screen to assemble the indoor unit included within tenant groups.

4-3-2. Display method

4-3-2-1. Selecting the display type

When the [Tenant Total] button has been clicked on and remains depressed, the total distribution calculation ratios are displayed for tenant units.

When the [Tenant Total] button has been clicked and does not remain depressed, the distribution ratio is calculated depending on the pressed status of the following buttons.

When the [Tenants] [I/D unit] button has been clicked on and the "I/D unit" remains depressed, the distribution calculation ratios are displayed for indoor units.

When the [Tenants] [I/D unit] button has been clicked on and the "Tenants" remains depressed, the distribution calculation ratios are displayed for tenant units.

> * When you first access this screen, the display shows the previously specified term.
> * If the display type is switched after the display term has been specified, it will be possible to display tenant total, indoor units and tenant units for the specified term.

4-3-2-2. How to specify the display range term

Click on the [Term setting] button to display the Term Setting screen.

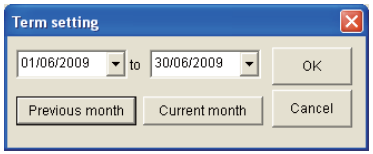

Click on the [▼] buttons on the right of the date display spaces to display the calendar.
Click on the calendar dates to select the term of data items to display.
Refer to "4.3 Calendar" in the basic software opration manual for the calendar operation method.

Specify the start and end dates.

Alternatively, click on the [Previous month] or [Current month] button.

[Previous month]: The term is set to the month leading up to the cutoff date of the preceding month.

[Current month]: The term is set to the period from the day after the preceding cutoff date to the present.

Specify the display term and click on the [OK] button to begin data collation.

> No other operations can be performed during data collation.

Once data collation is complete, the balance total or the weighting factor balance total for the term is displayed. To close the Term Setting screen, click on the [Cancel] button.

4-3-2-3. Specifying the time range

Click on the [▼] button on the right of the term setting space to display the list of display types.

Select the type to display.

Regular hour	: The time value set as the regular hour range settings on the Distribution Ratio Setting screen.
Out of hour	: The value for time other than that set as the regular hours range settings on the Distribution Ratio Setting screen.
Specified day	: Days displayed in red on the calendar on the Distribution Ratio Setting screen. (0:00-24:00)
All hours	: All hours (including regular hours, out of hours and special days)

The results are displayed once data calculation is complete.

> * If data has been calculated for a specified term, the displayed data can be switched just by changing the display type.

4-3-3. Printing

4-3-3-1. Print screen

Refer to "4-1-1 Print screen" for details of how to operate this screen.

4-3-3-2. Excel output

Currently displayed history can be saved as a file in CSV format, which can be displayed by Microsoft Excel and similar applications.
Refer to "4-1-2 Excel output" for the operation method.
The file name is assigned automatically.

• Tenant calculation

Distr. Ratio 01072009to16072009 (All hours, Tenant Total).CSV
Name Specified display term Display type

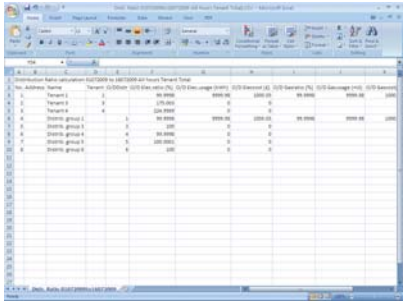

• Individual indoor units

Distr. Ratio_01072009to16072009 (All hours, ID unit).CSV

Name Specified display term Display type

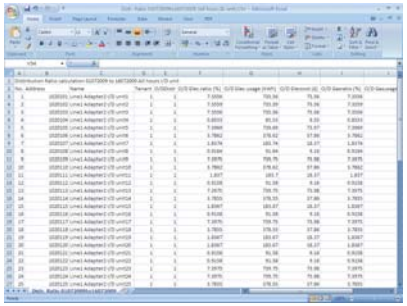

• Tenant units

Distr. Ratio 01072009to16072009 (All hours, Tenants).CSV

Name Specified display term Display type

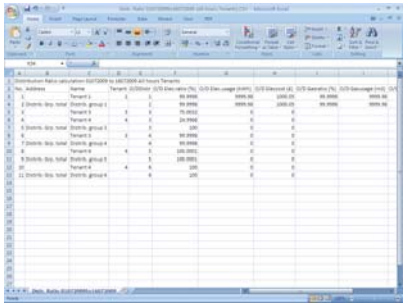

4-3-3-3. Print list

[Procedure]
On the menu bar, select "Print" – "Print list".
This is only enabled on the I/D unit distribution ratio calculation screen.

This prints out the table of I/D unit distribution ratio calculation, as displayed on the screen. The printed range is the entire page. Other tables cannot be printed.

4-3-3-4. List print preview

[Procedure]
On the menu bar, select "Print" – "List print preview".
This is only enabled on the I/D unit distribution ratio calculation screen.

This displays a print preview of the table of I/D unit distribution ratio calculation, as displayed on the screen. Other tables cannot be printed.

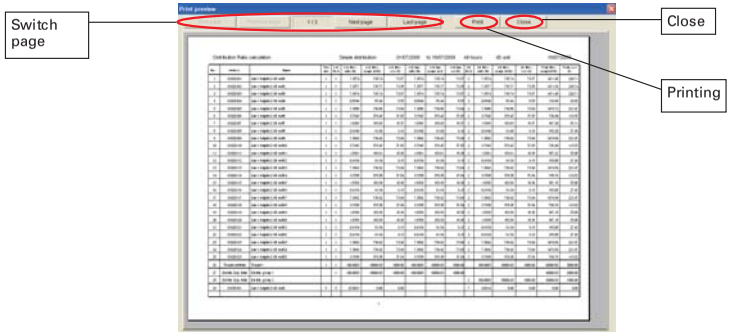

First page	: Move to the first page.
Previous page	: Move to the preceding page.
1 / 3	: The current displayed page number / the total number of pages
Next page	: Move to the next page.
Last page	: Move to the last page.
Print	:Specify a range to print out.
Close	:Closes the window.

• Printing

Click on the Print button to display the dialog box for specifying the print range.
The dialog box can be used to specify the range that will be printed.

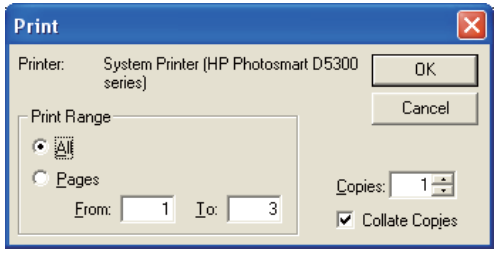

The default printer (******) will use (******) to print.
Print all pages or specify which pages to print in the Print Range.
Under Copies, specify the number of copies to print.

Click on the [OK] button to start printing.
Click on the [Cancel] button to close the dialog box.

• Form printing

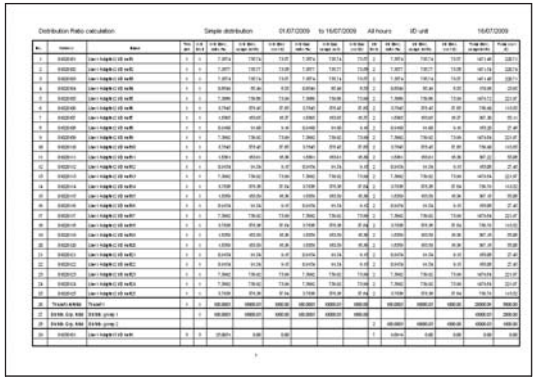

4-4. Accumulated value

[Procedure]
On the menu bar, select “Distribution ratio” – “Accumulated value”.

The accumulated values from the electricity and gas meters connected to the adapter are displayed.

• Adapter values
This displays the current value of the adaptor's accumulated pulses.

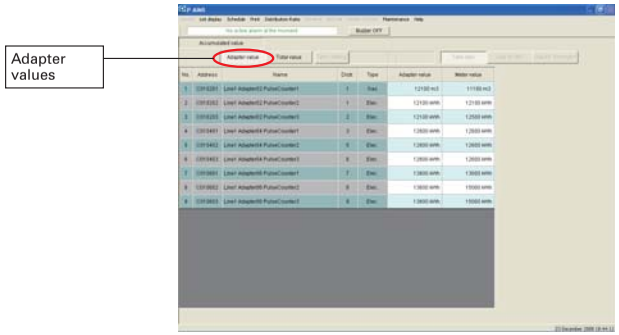

Key

• Address	:Displays the addresses of indoor units.
• Name	:Displays the names of accumulated pulse meters.
• Distr.	:Displays distribution group numbers.
• Type	:Displays the types of pulse meter.
• Adapter value	:Displays the current values of the adapters on the pulse meter.
• Meter value	:This displays the value with the addition of balance data between an arbitrary value for the pulse meter and the adapter value.

• Total value
This displays the total value of accumulated pulses on the adapter over the specified term.

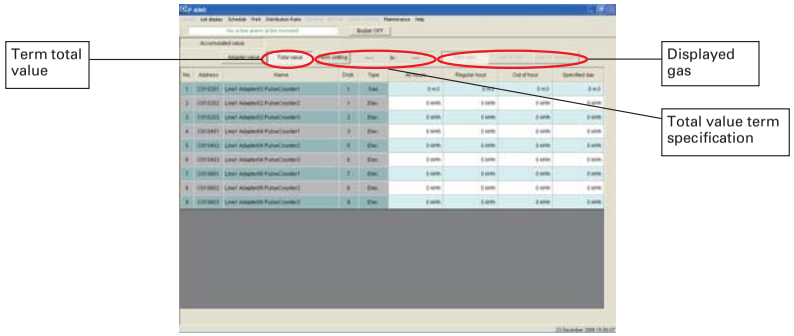

Key

• Address	:Displays the addresses of indoor units.
• Name	:Displays the names of accumulated pulse meters.
• Distr	:Displays distribution group numbers.
• Type	:Displays the types of pulse meter.
• All hours	:Displays the meter values for all hours (regular hours, out of hours and special days) within the specified term.
• Regular hour	:Displays the time value set as the Regular hour range settings on the Distribution Ratio Setting screen.
• Out of hour	:Displays the time value set as the out of Regular hour range settings on the Distribution Ratio Setting screen.
• Specified day	:Displays days for which the calendar display is set to red on the Distribution Ratio Setting screen. (0:00-24:00)

* Register accumulated value masters under “Distribution ratio” - “Maintenance” - “Accumulated value” screen on the menu bar.
* The current value is updated at 15-minute intervals.
* Meter values are displayed as the total of an arbitrary value plus balance data.
* Make settings for special days and regular hours under “Distribution ratio” - “Maintenance” - “Distribution Ratio Settings” screen on the menu bar.

4-4-1. Display method

4-4-1-1. Selecting the display type

The adaptor values and meter values are displayed when the Adapter Value button has been clicked on and remains depressed.
The total of meter values for the specified term is displayed when the Total value button has been clicked on and remains depressed.

> * Any button can be selected. It is not possible to select multiple buttons at the same time.

4-4-1-2. Term setting (term total value)

Click on the Term setting button to display the Term setting screen.

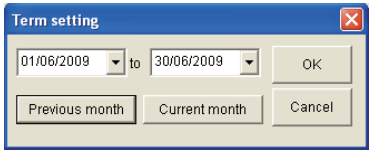

Click on the buttons on the right of the date display spaces to display the calendar.
Click on the calendar dates to select the term of data items to display.
Refer to "4.3 Calendar" in the basic software operation manual for the calendar operation method.

Specify the start and end dates.

Alternatively, click on the Previous month or Current month button.

Previous month: The term is set to the month leading up to the cutoff date of the preceding month.

Current month: The term is set to the period from the day after the preceding cutoff date to the present.

Specify the display term and click on the OK button to begin data collation.

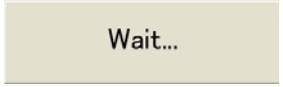

> No other operations can be performed during data collation.

Once data collation is complete, the balance total or the weighting factor balance total for the term is displayed. To close the Term Setting screen, click on the Cancel button.

4-4-1-3. Display selection for the gas calculation method

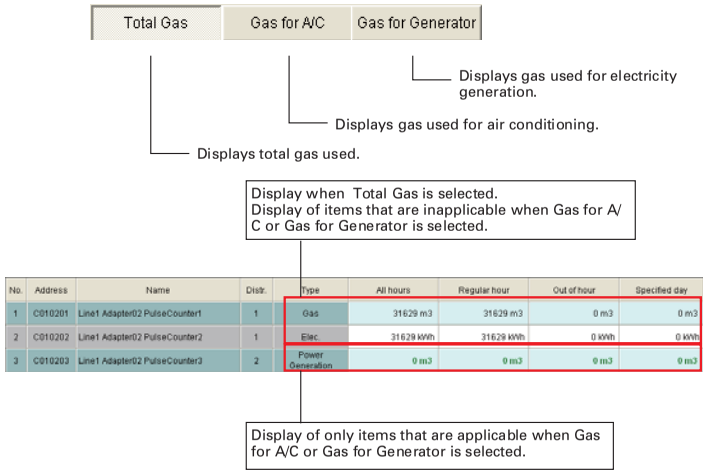

4-4-2. Changing the meter value

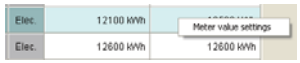

Move the cursor to the row to change the meter value for, then right click to display the Meter Value Settings menu and click on it.

The password screen appears, so input password level 2.

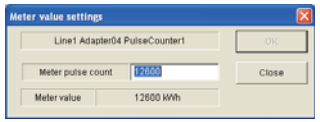

The Meter value settings screen appears. Use it to change the Meter pulse count.

After completing the change, click on the OK button to update the data.

Click on the Cancel button to revert to the data from before the change.

Click on the Close button to close the Meter value settings screen.

4-4-3. Printing

4-4-3-1. Print screen

Refer to "4-1-1 Print screen" for details of how to operate this screen.

4-4-3-2. Excel output

Currently displayed history can be saved as a file in CSV format, which can be displayed by Microsoft Excel and similar applications.
Refer to "4-1-2 Excel output" for the operation method.
The file name is assigned automatically.

Accumulated value Total value 01072009to16072009.CSV
Name Display type Specified display term

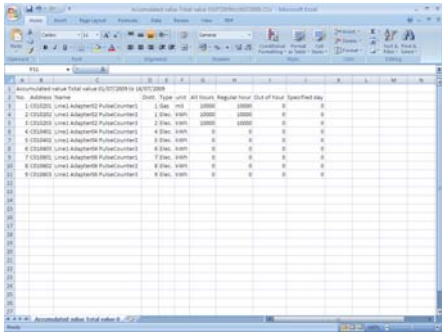

4-5. Distribution ratio setting

[Procedure]
On the menu bar, select "Distribution ratio" – "Maintenance" - "Distribution ratio settings".
(Password level 1)

Make settings for Distribution mode, Specified days, Regular hour range setting, Cut-off days, Conversion factors and charge Price rate.

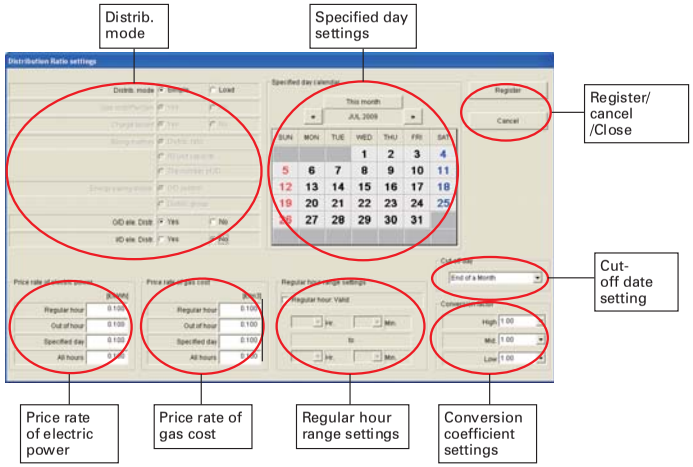

4-5-1. Setting distribution method

Set the distribution method. If the air conditioner is compatible with new distribution, loaded distribution can be selected for the calculation, but calculation will be disabled if it is selected with a non-compatible air conditioner. In that case, select simple distribution. For details of the distribution methods, refer to the distribution ratio calculation methods in the Reference appendix to the manual.
For more information, contact your dealer or service provider.

When Simple Distribution is selected

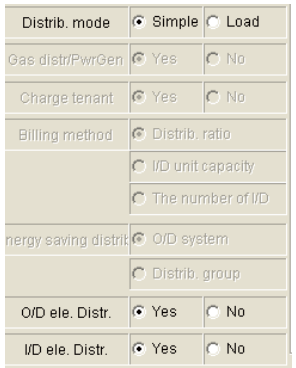

When Loaded Distribution is selected

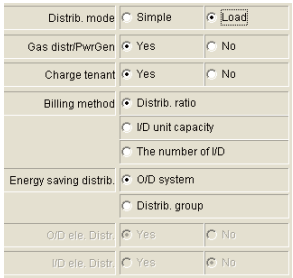

4-5-1-1. Selecting distribution method

Distrib. mode ○ Simple ● Load : Select simple distribution or load distribution.

4-5-1-2. Settings for simple distribution

The following can be selected when simple distribution is used.

O/D ele. Distr. ● Yes ○ No : Sets whether or not to use simple distribution for outdoor unit electricity.

Yes : Use simple distribution for outdoor unit electricity.

No : Do not use simple distribution for outdoor unit electricity.

I/D ele. Distr. ● Yes ○ No : Sets whether or not to use simple distribution for indoor unit electricity.

Yes : Use simple distribution for indoor unit electricity.

No : Do not use simple distribution for indoor unit electricity.

* The distribution of electricity for indoor units and outdoor units can be calculated separately for individual distribution groups.(This function is only for simple distribution).

4-5-1-3. Settings for load distribution

The following can be selected when load distribution is used.

Gas distr/PwrGen ● Yes ○ No : Select whether or not to distribute gas used for power generation.

Yes : Gas for air conditioning and gas for power generation will be separated.

No : All gas will be treated as air conditioning gas, without distinction between gas for air conditioning and gas for power generation.

Charge tenant ● Yes ○ No : Select whether or not to bill tenants for gas used for power generation.

Yes : Gas used for power generation will also be calculated for the tenants.

No : Gas used for power generation will not be calculated for the tenants.
(In that case, the amount of gas used for power generation will not be calculated, and will be at the expense of the owner.

Billing method ● Distrib. ratio / ○ I/D unit capacity / ○ The number of I/D : Specify the distribution method to use for gas for power generation. Add gas for air conditioning to the power generation gas distributed to tenants.

Distrib. ratio

: Assign it to each tenant proportionally to their distribution ratio.

I/D unit capacity

: Assign it to each tenant proportionally to the total capacity of indoor units included for that tenant. If the tenant has a smaller number of units, but of larger capacity, it will be assigned more than others.

The number of I/D

: Assign it to each tenant proportionally to the total number of indoor units included for that tenant. This method is unrelated to the size of indoor units. Even if the indoor units are of high capacity, the amount assigned to the tenant will be smaller than others if the number of units is lower.

Energy saving distrib. ● O/D system / ○ Distrib. group : Select whether operating efficiency improvements achieved by running energy-saving model, such as 3-way systems or ice heat accumulation, should be shared only within the system concerned or shared throughout the distribution group, which also includes ordinary model.

4-5-2. Editing specified day

4-5-2-1. Changing the calendar

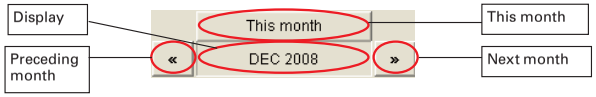

Click on the « button to display the preceding month.

Click on the » button to display the next month.

Click on the This month button to return to the current month.

4-5-2-2. Setting specified day

To set a day as a specified day, click on the day. Its color will change to 30. Click again to cancel the setting. The color for that day reverts to 30.

4-5-3. Setting the regular hour range settings

4-5-3-1. Setting enable/disable for the regular hour range

To enable the setting for the regular hour range, click on ☑ Regular hour: Valid, and add the check mark. Click there again to remove the check mark, disabling the setting.

4-5-3-2. Setting times for Regular hour

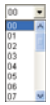

Set the start and end times for Regular hours.
To set times, click on the button next to the hour or minute of the

08 Hr. 00 Min. .

A dropdown list of 0–23 is displayed for the hour, and of 0, 30 for the minutes. Use them to select the right time.

4-5-4. Setting accumulated data

4-5-4-1. Setting the cut-off day

Set the monthly cut-off day for accumulated data. Click on the button to the right of the cut-off day to display a drop-down list offering 1–28 and month end. Select the right date.
If the cut-off date is set to "20", one month's data is from the 21st of the preceding month to the 20th of the current month, and the accumulated data is calculated accordingly.
* Among the accumulated distribution data set under Automatic Excel Output, the files related to cut-off date are created on the day after the cut-off date set here.

4-5-4-2. Setting conversion factor

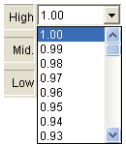

When calculating the distribution for the weighting factor balance total, applying weighting according to fan speeds.
Click on the button to the right of High, Mid. and Low.
Drop down lists showing the range 1.00–0.50 in steps of 0.01 are displayed, so select the relevant coefficients.
For example, if High is set to 1.00 and Mid. to 0.80, the distribution calculation would apply a 20% lower weighting to operation at medium fan speed than to operation at high fan speed.

4-5-5. Registering unit prices

4-5-5-1. Registering Price rate of electric power

Set Price rate of electric power. The distribution ratios, calculated using simple distribution or Load distribution, are multiplied by the electricity usage calculated from the power quantity from the pulse meter, and then by the electricity unit price to produce the charge for each tenant.
Unit price can be set in the range 0.000–9.999£/kWh.
If the time zone totals calculation function is used for the calculation, separate unit prices are set for regular hours, out of hours, and specified days, so it is possible to set, for example, a slightly higher rate for out of hours usage, to vary the level of billing with the time zone. Conversely, if the unit price was set for "All hours", a single calculation can be performed, regardless of time zones.
The results of these two calculation types are displayed together in the "All hours" list.

4-5-5-2. Registering Price rate of gas cost

Set the unit price for gas charges. The distribution ratios, calculated using simple distribution or Load distribution, are multiplied by the gas usage calculated from the gas quantity from the pulse meter, and then by the gas unit price to produce the charge for each tenant.
Unit price can be set in the range 0.000–9.999£/m^3.
If the time zone totals calculation function is used for the calculation, separate unit prices are set for regular hours, out of hours, and special days, so it is possible to set, for example, a slightly higher rate for out of hours usage, to vary the level of billing with the time zone. Conversely, if the unit price was set for "All hours", a single calculation can be performed, regardless of time zones.
The results of these two calculation types are displayed together in the "All hours" list.

4-5-6. Registering settings

4-5-6-1. Registering settings

Click on the Register button to register the set content.

4-5-6-2. Deleting settings

Click on the Cancel button to delete the set content and revert to the previously registered content.

4-5-6-3. Deleting

Click on the Close button to close the Distribution Ratio Settings screen.

4-6. Register distribution group name

[Procedure]
On the menu bar, select "Distribution ratio"– "Maintenance" - "Register distribution group name".
(Password level 1)

Distribution groups can be added and deleted. Distribution groups must be registered on this screen before they can be selected on the Accumulated Value master and the Indoor Unit master.

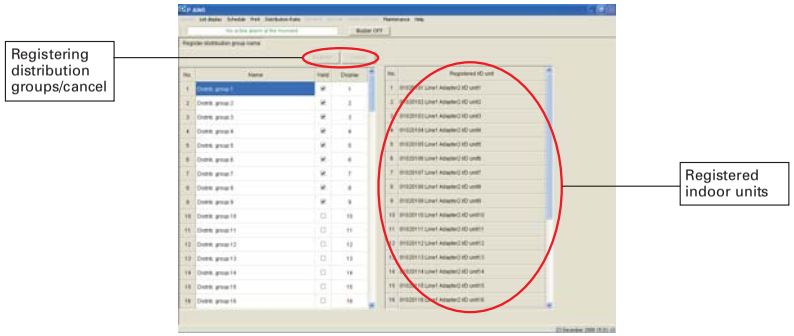

Register :Register settings.
Cancel :Revert to the previously registered state.

Key
- Name :Displays distribution group names.
- Valid :Sets enabled/disabled.
- Display :Displays the order in which the distribution groups are displayed.
- Registered I/D unit :This displays the names and other information on the indoor units that have been registered to the distribution group concerned.

* If the display order numbers are the same, tenants in the same distribution group will be displayed ahead of other tenants.
In that case, the display order will be as specified in the tenant name registration.

4-6-1. Editing distribution groups

4-6-1-1. Editing distribution group names

To register distribution group names, input the registered names in the item cells to register. The previously displayed name is deleted and replaced by the new name.
To edit, double click on the item cell to revise. The cursor is displayed in the selected item cell, enabling editing.

4-6-1-2. Enabling/disabling registration

Valid

To enable registration, a check mark, as illustrated on the left, must be added to this enabled cell.
(Click to add the check mark. Click again to remove the check mark.

4-6-1-3. Registering display orders

When a distribution group is registered to another master, the pulldown list is displayed. Input the display order on the list.
("0" means display at the end of the list.

4-6-2. Saving and revising edited distribution groups

After editing, the Register and Cancel buttons are enabled.
Once you have finished editing the distribution group, click on the Register button at top of the screen.
The edited distribution group is saved.
Click on the Cancel button to return the edited distribution group to its previous state, without registering changes. Added and deleted items are also restored to their previous states.

4-6-3. Change confirmation

If you have changed the distribution groups and attempt to switch to another screen without first saving the changes, the change confirmation message is displayed.

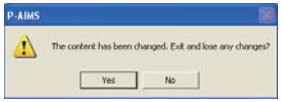

Click on the Yes button to discard changes and switch screens.
Click on the No button to continue using this screen.

4-7. Register tenant name

[Procedure]
On the menu bar, select "Distribution ratio"– "Maintenance" - "Register tenant name".
(Password level 1)

Register tenant names.

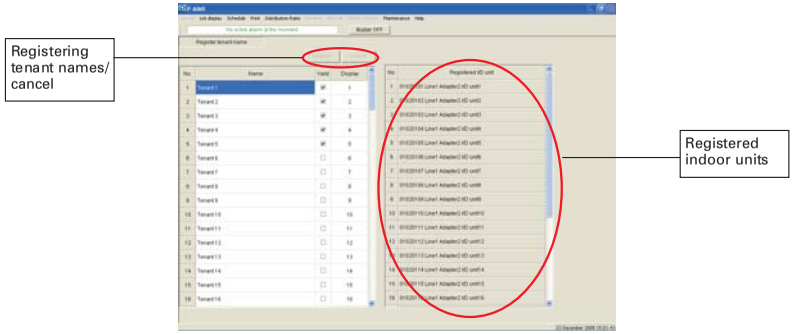

Register :Register settings.
Cancel :Revert to the previously registered state.

Key
- Name :Displays the name of the billed party (the tenant) for the invoice.
- Valid :Sets enabled/disabled.
- Display :Indicates the order in which tenants are displayed on the list screen.
- Registered I/D unit :Displays the names and other information on the indoor units that have been registered to the tenant name concerned.

* If the display order numbers for the distribution group are the same, the tenant in the same distribution group will be displayed ahead of the other tenant.
In that case, the display order will be as specified in the tenant name registration.

4-7-1. Editing tenants

4-7-1-1. Editing tenant names

To register tenant names, input the registered names in the item cells to register. The previously displayed name is deleted and replaced by the new name.
To edit, double click on the item cell to revise. The cursor is displayed in the selected item cell, enabling editing.

4-7-1-2. Enabling/disabling registration

Valid ☑ To enable registration, a check mark, as illustrated on the left, must be added to this enabled cell.
(Click to add the check mark. Click again to remove the check mark.

4-7-1-3. Registering display orders

When a distribution group is registered to another master, the pulldown list is displayed. Input the display order on the list.
("0" means display at the end of the list.

4-7-2. Saving and discarding edited tenants

After editing, the Register and Cancel buttons are enabled.

Once you have finished editing the tenant, click on the Register button at top of the screen.
The edited tenant is saved.

Click on the Cancel button to return the edited tenant to its previous state, without registering changes.

Added and deleted items are also restored to their previous states.

4-7-3. Change confirmation

If you have changed the tenants and attempt to switch to another screen without first saving the changes, the change confirmation message is displayed.

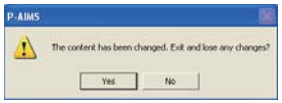

Click on the Yes button to discard changes and switch screens.
Click on the No button to continue using this screen.

4-8. Indoor unit settings

[Procedure]
On the menu bar, select “Distribution ratio” – “Maintenance” - “I/D unit settings”.
(Password level 2)

Set associations between indoor units, distribution groups and tenants. Also set the current added values etc. for electric heaters and indoor fans.

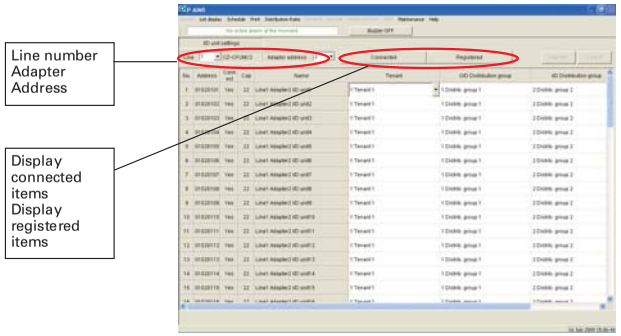

Line 1 CZ-CFUNC2 Adaptor address 1 :Specify communication line numbers and adaptor addresses.

Connected :Only displayed when the connection column is "Yes".

Registered :Only those that are registered in the I/D unit master data settings are displayed.

Register :Register settings.

Cancel :Revert to the previously registered state.

Key

• Address	: Displays the addresses of indoor units.
• Connect	: Displays "Yes" for data that is connected to indoor units.
• Cap.	: Displays the capacities of indoor units.
• Name	: Displays the names of indoor units.
• Tenant	: Specify associations with tenant names.
• O/D distribution group	: Specify associations with distribution groups for outdoor units.
• I/D distribution group	: Specify associations with distribution groups for indoor units. (This is displayed when “Yes” is selected for indoor distribution under Distribution ratio settings).
• Elec. heater	: Specify electric heater capacities.
• I/D fan	: Specify current added values for fans of indoor units.
• Fix cap.	: Specify the capacities of indoor units.

4-8-1. Registering indoor units

4-8-1-1. Registering tenants

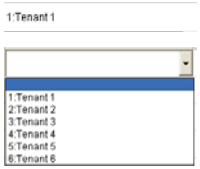

To specify tenants registered under Register Tenant Name, click on the tenant column for the indoor unit concerned, to display a combo box.
Click on the button on the right to display the pulldown menu, then click on the relevant tenant.
The pulldown menu displays the tenants registered under Register Tenant Name.
The same procedure can be used to make changes.

4-8-1-2. Registering distribution groups

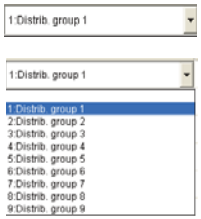

To specify distribution groups registered under Register Distribution group name, click on the distribution group column for the indoor unit concerned, to display a combo box.
Click on the button on the right to display the pulldown menu, then click on the relevant distribution group.

The pulldown menu displays the distribution groups registered under Register Distribution Group Name.
The same procedure can be used to make changes.

4-8-1-3. Registering electric heater capacities

Specify the electric heater capacities of indoor units that are equipped with electric heaters. Input capacities in kW units. They are used in loaded distribution calculations.

4-8-1-4. Registering indoor fans

When calculating loaded distribution, input the indoor fan current added values required for calculating the fan power of indoor units.
The initial value is set to "0.02".

4-8-1-5. Registering fixed capacities

The capacities of indoor units are acquired automatically and displayed in the Cap column. There are some models from which the data cannot be acquired automatically, so input the capacities of those in kW units. If the value in the Fix cap. column is "0", the data in the Cap. column will be used to calculate distribution.

4-8-1-6. Enabling/disabling registration

To enable registration, a check mark, as illustrated on the left, must be added to this enabled cell.
(Click to add the check mark. Click again to remove the check mark.

4-8-2. Saving and discarding edited indoor unit settings

After editing, the Register and Cancel buttons are enabled.
Once you have finished editing the indoor unit settings, click on the Register button at top of the screen.
The edited tenant is saved.

Click on the Cancel button to return the edited tenant to its previous state, without registering changes.

Added and deleted items are also restored to their previous states.

4-8-3. Change confirmation

If you have changed the indoor unit settings and attempt to switch to another screen without first saving the changes, the change confirmation message is displayed.

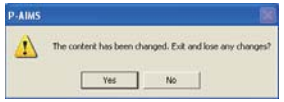

Click on the Yes button to discard changes and switch screens.
Click on the No button to continue using this screen.

5. Supplementary Information

- Personal Computers
  Use a personal computer exclusively for the P-AIMS System.
  Sharing the PC with any other system could cause problems.

- Data backup
  The PC used with the P-AIMS System could break down, so you are advised to back up data to an external hard drive or other storage. For more information, contact your dealer or service provider.
  NOTE: When the drive name of an external hard disk drive is changed, it is not possible to back up.

- Power outages
  We recommend use of a UPS device (uninterruptible power supply) to protect the P-AIMS in the event of a power outage. For more information, contact your dealer or service provider.

- Please note that we will not provide compensation in the following circumstances:
  Any fault caused by a third party becoming aware of a password.
  Any fault caused by sharing a PC between P-AIMS and another application.

- Acquisition of accumulated data
  When accumulated data is acquired, it passes through two communication lines, from the indoor unit group to the AMY adapter, and from there to the P-AIMS system. Please note, it is possible that regular hours data may be received as out of hours data, due to the timing of communications and any related delays.

- Limitations on changing settings
  Some types of air conditioners are limited in the settings which they support.
  For example, cooling-only air conditioners cannot be set to heating.
  Floor-type models typically support only high fan speeds.
  Ceiling mounted models do not have flaps, and therefore cannot change the fan direction.
  You should be aware of the limitations of the air conditioner models in your system.
  For more information, contact your dealer or service provider.

- Standby power
  The system performs distribution calculations on the basis of indoor unit operating time.
  Therefore it does not count power consumed while stopped (on standby).
  For example, if no units are operated over the course of a month, no standby power consumption is distributed to any tenant. However if a unit is operated for even one minute, then all of the standby power consumption is distributed to the corresponding tenant.
  For load distribution, distribution is made with standby power added.

- Only alarm codes are displayed in the notification bar and alarm log display.
  The content of an alarm can vary for different models, even if the alarm code is the same.
  Consult the documentation of the various models to determine the content of the alarm.

- Because of data transmission delay, the totals and distribution data displayed by the system for different time zone (regular hours, out of hours, special days) may not be counted in a completely accurate fashion.

- Cut off processing for the previous day is performed every day for a few minutes after midnight. The system may not respond to user input during this processing.
- After the settings of an indoor unit are changed from the P-AIMS System, the display may revert temporarily to the former settings. This is more likely to occur with all-unit operations. The cause is communications delay, not any malfunction in the system. If you wait a few minutes, the display will show the correct information.

- When errors occur while operating during a thunderstorm or because of electromagnetic interference.
  Power the terminal off and then on again.
  As a rule, the system should be powered off only in cases such as the above.
  Correct management of air conditioning is not possible when the system is powered off.

- About distribution ratios and energy usage
  The formulas used by this system to calculate air conditioning distribution ratios and energy usage are only approximations. They normally do not yield the same amounts that appear on bills from electric and gas utilities.
  Depending on operating conditions, there may be a margin of error between distribution ratios and actual air conditioning amounts.
  There may also be a small margin of error between the following, due to the rounding algorithms used in distribution ratio calculations.
  · “Distribution ratios of tenants in a group” and “100.0000%”
  · “Total of distribution ratios” and “Overall tenant distribution ratio”
  · “Total of usage by each tenant” and “Total usage indicated by pulse meters”
  · “Total of usage during regular hour, out of hours, and specified days time zones” and “Total of all hours time zones”
  This product does not measure energy directly, but uses the ratios of loads estimated for each indoor unit to calculate distribution (proportional allocation). The results of the calculations should be regarded as approximations.

- About operating time totals
  Air conditioning distributions and air conditioner operating times are calculated only for periods in which the system is powered on and in which there are no communications errors between the system and the air conditioners.
  Therefore, no totals are accumulated for times when the system is powered off or in which communications errors occur.
  You should be aware that errors in distribution ratios will become larger if conditions like the above continue for a longer period of time.

16. Intelligent Management System

■ Situations in which major errors are likely to occur in calculations of distribution ratios etc.
In some of the semi-central-type and floor-type air conditioners and older models with electric heaters, major errors are likely to occur in calculations of air conditioning distribution ratios and other figures.
Also, if pan-type humidifiers with high power consumption are used, the distribution calculation does not reflect humidification operation time, so major errors result.
For more information, contact your dealer or service provider.

■ Setting the current date and time
The current date and time should be set on a regular basis, since the clock of an ordinary PC can gain or lose up to about two minutes per month.

■ Passwords
Passwords should be recorded and saved in a safe place. They should never be disclosed to third parties.
If you forget your password, contact your dealer or service provider.

■ Interface adaptors (sold separately)
Interface adaptors (CZ-CAPC2)
You can use on/off local adaptors to connect equipment that can be turned on and off (fans, room air conditioners and so on) to the system.
However, note that the following limitations apply.
For details, refer to the documentation of the equipment or contact your dealer or service provider.

▶ About distribution calculations **Important**

[1]Fan speed data
Accumulated operation time for each fan speed is fixed at medium fan speed.
Accumulated time for thermostat On is counted as fixed to Medium fan speed even when a thermostat On signal input is connected to the local adapter.

[2]Indoor unit capacity value
Values cannot be loaded automatically.
Contact your dealer or service provider about settings.

[3]Product type
It is not possible to distinguish between PAC and GHP models.
Contact your dealer or service provider about settings.

[4]Distribution between indoor units
They are only compatible with simple distribution. No load distribution can be made.
Contact your dealer or service provider for details.

▶ As long as it conforms to the contact specifications of the interface adaptors, any type of equipment can be connected to the system. However, you should avoid connecting equipment whose operation can have grave consequences for life or property.

6. License Certification

Before you can use the Distribution Ratio Software for P-AIMS system, you need to first perform a work procedure called "license certification."

To perform license certification, make an inquiry by sending the inquiry key to the inquiry e-mail address below. You will be registered as a user and issued a release key, and then receive a reply.

<Contact Information>
Product ID Issuance Desk,

E-mail address: cmc_productid_desk@gg.jp.panasonic.com

When you make an inquiry, send the following information together with the inquiry in order to be registered as a user and issued a release key.
(1) Product name
(2) Company name/contact person
(3) Phone number
(4) E-mail address
(5) Inquiry key

* If you do not input a release key, you will no longer be able to use the system after 30 days elapses. Obtain a release key and perform license certification as soon as possible.
* Make an inquiry as soon as possible because it may sometimes take several days to be issued a release key.

License Certification Procedure

The procedure from after the P-AIMS system is installed up until the end of license certification is described below.

(1) Check the inquiry key from the License Certification screen.

(2) Send the inquiry key to the Product ID Issuance Desk (cmc_productid_desk@gg.jp.panasonic.com).
Also notify us of the product name, company name/contact person, phone number, and e-mail address.

(3) A release key is issued.
You are registered as a user and a release key is issued. A reply is sent to the registered mail address.

(4) Input the release key from the License Certification screen.

(5) The license certification procedure is finished.

Performing License Certification

1. A License Certification screen such as the following appears when you start a P-AIMS systems for which license certification is not finished.

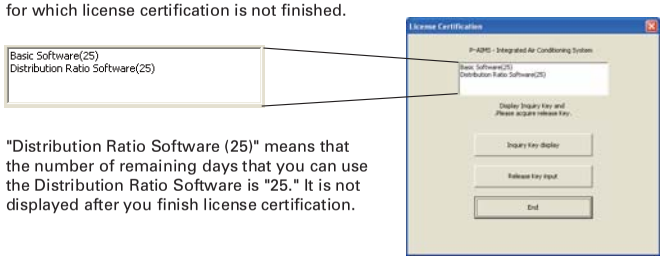

"Distribution Ratio Software (25)" means that the number of remaining days that you can use the Distribution Ratio Software is "25." It is not displayed after you finish license certification.

* After you start a P-AIMS system for which license certification is not finished, the License Certification screen will appear at 9:00 a.m. and 3:00 p.m. This screen is not displayed after you finish license certification.
If you install optional software, the License Certification screen will appear until license certification is finished for all of the software.

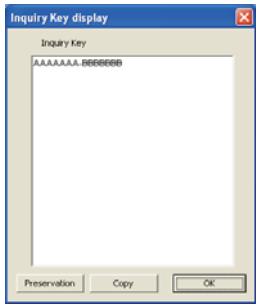

2. If you click the button in the License Certification screen, the Inquiry Key display screen appears, and the inquiry key is displayed in the screen.
Send the key displayed in this screen to the Product ID Issuance Desk (cmc_productid_desk@gg.jp.panasonic.com) by e-mail.
At the same time, also notify us of the following items.
(1) Product name (required)
(2) Company name/contact person
(3) Phone number
(4) E-mail address (required)
You will be registered as a user and issued a release key.

:Clicking this button saves the inquiry key as a text file. Follow the instructions on the screen to save the text file. Enter the product name, company name/contact person, phone number, and e-mail address in this saved text file, and send the text file to the Product ID Issuance Desk by e-mail.

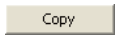

:Clicking this button copies the inquiry key to the Windows clipboard. Paste the inquiry key into your mail.

:Clicking this button closes the Inquiry Key display screen.

3. When you receive the release key, restart the P-AIMS system. See "2. Startup and shutdown" for how to restart the P-AIMS system, and then restart the system.

   If license certification is not finished for the P-AIMS system, the License Certification screen on the right appears before the P-AIMS system restarts. Click the [Release Key input] button to display the Release Key input screen, and enter the release key.

* If you install multiple P-AIMS system software, the same number of license certifications is required. In such a case, the number of release keys sent will be the same as the number of inquiry keys.
  Enter all of the received release keys sequentially, and perform license certification. (There is no set order for entering release keys, so they can be entered in any order.)

License certification is finished once all of the release keys have been entered.

Click the [End] button. The License Certification screen closes, and the P-AIMS system starts.

* The P-AIMS system will start even if you click the [End] button without entering the release key. You can use the system as is until license certification is finished. (The system can be used for a period of 30 days.)

7. Preparation

7-1. Installation

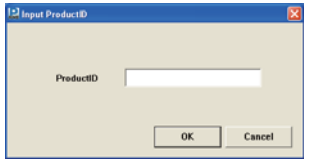

1. First, stop the P-AIMS system.
   Insert the Fare Calculate Software CZ-CSWAC2 CD of the air-conditioning integrated system (P-AIMS system) you purchased into the CD-ROM drive. The program on the CD-ROM starts automatically and makes preparations for installation. If installation does not start, double-click "Setup.exe" of the CD-ROM drive to start it.
   Enter the Product ID in the Input Product ID screen that appears.
   For the Product ID, see the "Product ID Issuance Certificate" supplied with the software.

* Keep the "Product ID Issuance Certificate" in a safe place. The Product ID is required to install the air-conditioning integrated system. The "Product ID Issuance Certificate" will not be reissued.

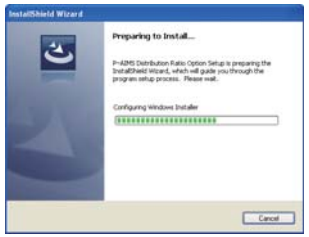

2. The InstallShield(R) Wizard prepares to install the P-AIMS system.

3. After a short while, the "The InstallShield(R) Wizard will install P-AIMS Distribution Ratio Option on your computer. To continue, click Next." message appears. Click the [Next >] button.

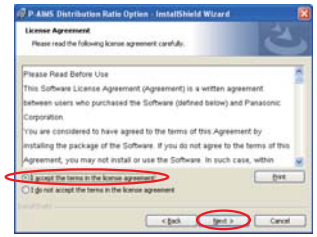

4. Next, the License Agreement screen appears. Carefully read the license agreement, and click "I accept the terms in the license agreement" if you agree to the terms of the license agreement. The Next > button becomes active. Click the Next > button. (The software cannot be installed if you do not agree to the terms of the license agreement.)

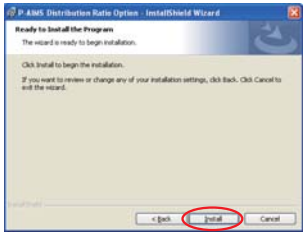

5. The "The wizard is ready to begin installation. Click Install to begin the installation." message appears. Click the Install button.

6. The installation of the P-AIMS system begins.

   Please wait a while.

7. When the P-AIMS system setup is finished, the installation complete screen appears.
   Click the Finish button to complete the installation.

* When installing the Distribution Ratio software, it is possible to install this system without stopping the P-AIMS system, but the functions of the Distribution Ratio software will not be added. Restart the P-AIMS system.

7-2. Display after restart

After the system restarts, the fee calculation functions are enabled and the menu item Distribution ratio is selectable.

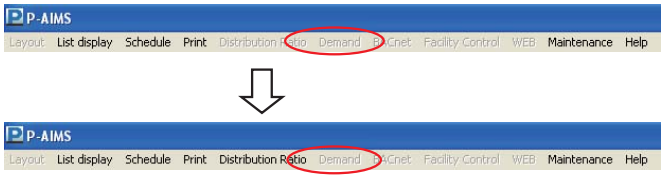

7-3 Settings

Once installation is complete, you must make registrations and settings such as "Distribution ratio setting," "Register distribution group name," "Register tenant name," "Accumulated value master data," and "I/D unit master data."Refer to the explanations in the corresponding sections for information on these settings.

Entrust the registration of "Accumulated value master data" and "I/D unit settings" to the place of purchase or the service company.

Reference

■ Distribution ratio calculation (for simple distribution)

This section explains how air conditioning consumption distribution ratio and charges etc. are calculated by the P-AIMS system. The P-AIMS system is a common product for both electric package air conditioners (PAC) and gas heat pump air conditioners (GHP), so distribution ratios and air conditioning consumption are calculated by different methods for PAC and GHP.

1. Parameters as listed below are used for calculations:
   ① RHHi : Accumulated operation time for indoor unit i (High fan speed)
   ② RHi : Accumulated operation time for indoor unit i (Medium fan speed)
   ③ RLi : Accumulated operation time for indoor unit i (Low fan speed)
   ④ SHHi : Thermostat ON accumulated time for indoor unit i (High fan speed)
   ⑤ SHi : Thermostat ON accumulated time for indoor unit i (Medium fan speed)
   ⑥ SLi : Thermostat ON accumulated time for indoor unit i (low fan speed)
   ⑦ PSi : Capacity of indoor unit i (equivalent kW value)
   ⑧ αHH : Weighting coefficient for high fan speed (0.50-1.00).
   ⑨ αH : Weighting coefficient for medium fan speed (0.50-1.00).
   ⑩ αL : Weighting coefficient for medium fan speed (0.50-1.00).

* ①-③ are the sums of thermostat On accumulated operation time and thermostat Off accumulated operation time at each fan speed.
④-⑥ are the thermostat On accumulated operation times at each fan speed.

2. Distribution ratio calculation formulae
   Use the following formulae to find suitable power consumption indices for indoor unit i.
   (1)Outdoor unit distribution
   For a PAC system
   The convenient outdoor power consumption index TEOi for indoor unit i is
   TEi =(SHHi×αHH+SHi×αH+SLi×αL)× PSi
   The convenient outdoor energy consumption index TGi for indoor unit i is
   TGi=0

   For GHP systems
   The convenient outdoor power consumption index TEOi for indoor unit i is
   TEi =(RHHi×αHH+RHi×αH+RLi×αL)× PSi
   The convenient outdoor energy consumption index TGi for indoor unit i is
   TGi =(SHHi×αHH+SHi×αH+SLi×αL)× PSi

   (2)Indoor unit distribution
   Common for both PAC and GHP
   The convenient outdoor power consumption index TEIi for indoor unit i is
   TEIi =(RHHi×αHH+RHi×αH+RLi×αL)× PSi
   The outdoor electricity consumption index TOTALOe and outdoor gas consumption index TOTALg, and indoor electricity consumption index TOTALIe for the distribution group as a whole are the totals of TEOi, TGi and TEIi for all indoor units in the group (m units).
   TOTALOe=TEO1+TEO2+·····+TEOm
   TOTALg=TG1+TG2+·····+TGm
   TOTALIe=TEI1+TEI2·····+TEIm

   Therefore, the outdoor electricity consumption distribution ratio REOi, outdoor gas consumption distribution ratio RGi and indoor electricity consumption distribution ratio REIi for indoor unit i are the ratios of the consumption indices between the indoor unit concerned and the group as a whole, so

   REOi(%)=TEOi ÷ TOTALOe × 100
   RGi(%)=TGi ÷ TOTALg × 100
   REIi(%)=TEIi ÷ TOTALIe × 100

(Distribution groups can be set separately for outdoor units and indoor units.)
Outdoor electricity usage distribution ratio NEOj, outdoor gas usage distribution ratio NGj and indoor electricity usage distribution ratio NEIj in tenant units can be calculated as follows, where n is the number of indoor units belonging to tenant j.

NEOj(%)=REO1+REO2+·····+REOn
NGj(%)=RG1+RG2+·····+RGn
NEIj(5)=REI1+REI2+·····+REin

*Distribution ratios are rounded at the fifth decimal place and shown to the fourth decimal place.

3. Air conditioning usage calculation method
   ① NEOj : Outdoor electricity usage distribution ratio (%) for tenant j.
   ② NGIj : Outdoor gas distribution ratio (%) for tenant j.
   ③ NEIj : Indoor electricity usage distribution ratio (%) for tenant j.
   ④ PeO : Accumulated outdoor electricity usage value for the group concerned.
   ⑤ PeI : Accumulated indoor electricity usage value for the group concerned.
   ⑥ Pg : Accumulated outdoor gas value for the group concerned.
   ⑦ @E : Unit charge for electricity charges (£) (0.000-9.999).
   ⑧ @G : Unit charge for gas charges (£) (0.000-9.999).

Air conditioning usage for each tenant is found by allocating the usage for the group as a whole according to the distribution ratio for each tenant, so in the following formulae, MMEj is the electricity usage and MMGj is the gas usage for tenant j.

MMEOj(kwh)=PeO×NEOj
MMGj(m^3)=Pg×NGj
MMEIj(kwh)=PeI×NEIj

Outdoor electricity usage charge MEOj, outdoor gas usage charge MGj, and indoor electricity usage charge MEIj for tenant j are

MEOj(£)=MMEOj×@E
MGj(£)=MMGj×@G
MEIj(£)=MMEIj×@E

4. Screen Display
   NEOj (%) is displayed in the outdoor electricity distribution ratio space.
   NGj (%) is displayed in the outdoor gas distribution ratio space.
   NEIj (%) is displayed in the indoor electricity distribution ratio space.

   MMEOj (kWh) is displayed in the outdoor electricity usage space.
   MMGj (m^3) is displayed in the outdoor gas usage space.
   MMEIj (kWh) is displayed in the indoor electricity usage space.

   MEOj (£) is displayed in the outdoor electricity charge space.
   MGj (£) is displayed in the outdoor gas charge space.
   MEIj (£) is displayed in the indoor electricity charge space.

   MEOj(£) + MGj(£) + MEIj (£) Is displayed in the total charge space.

■ Distribution ratio calculation (for loaded distribution)

1. Data flow chart

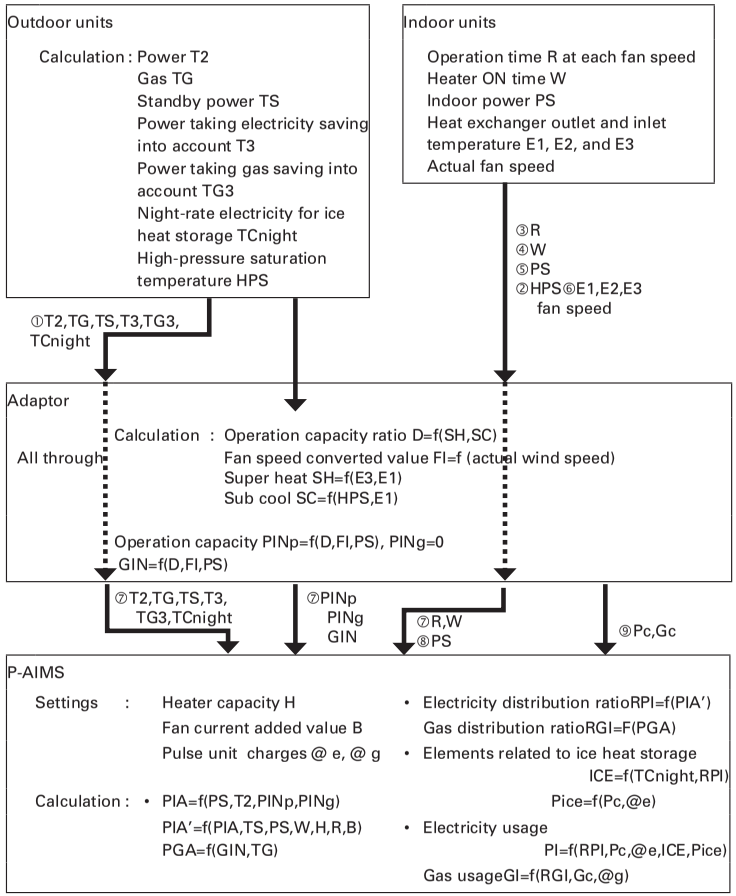

"f" means function. For example:
Operation capacity ratio D=f(SH,SC)
means that the operation capacity ratio is calculated using super heat SH and sub cool SC.

2. Distribution ratio calculation method
The following parameters are used.

① NEj : Electricity distribution ratio (%) for tenant j
② NGj : Gas distribution ratio (%) for tenant j
③ PE1 : Accumulated pulse value from electricity meter 1 for the group concerned.
④ PE2 : Accumulated pulse value from electricity meter 2 for the group concerned.
⑤ PG : Accumulated pulse value from the gas meter for the group concerned.
⑥ @E : Unit charge for electricity usage (£/kWh) (0.000-9.999).
⑦ @G : Unit charge for gas usage (£/m^3) (0.000-9.999).

③, ④ and ⑤ are the accumulated pulse counter values of the electricity and gas meters registered for the use of the group concerned.
When multiple pulse meters are registered for a single distribution group, the totaled values each for electricity and for gas are used.

⑥ and ⑦ are user-specified currency values indicating the £ equivalent of a unit of usage input from the pulse meter.

The usage charge for each tenant is found by allocating the usage charge for the distribution group as a whole according to the distribution ratio for each tenant, so in the following formulae, MEj is the electricity usage charge and MGj is the gas usage charge for tenant j.

MEj(£)=(PE1 × @E)× NEj
MGj(£)=(PG1 × @G)× NGj

For PAC systems, NGj=0%, so MGj is Y0.
However, for a HOT system,

MGj(£)=(PG1 × @G)× NGj

Note

User memo space

If you fill this out at the time of purchase, it is convenient when ordering repairs etc.

Serial No.	
Date of installation	
Dealer	Telephone No. ( )

Operation Manual

Air Conditioning
Intelligent Management System

CZ-CSWWC2

Web Software

P-AIMS

Thank you for purchasing our monitoring and control system.
Before using the system, be sure to read this manual carefully. After reading the manual, store it, in a convenient location for easy reference.

Contents

■ Precautions on Using This Product i
■ Introduction ii

■ P-AIMS System Settings and Operations
1. Quick Reference 1
2. Using the System 2

■ Web Browser Settings and Operations
3. Quick Reference 10
4. Using the System 11
5. Supplementary Information 44
6. License Certification 45
7. Preparation 48

Contents

■Precautions on Using This Product i
■Introduction ii

■P-AIMS System Settings and Operations
1. Quick Reference 1
2. Using the System 2
2-1. Web Basic Settings 2
2-1-1. Alarm email recipient settings screen 3
2-1-1-1. How to enter and change email address 4
2-1-1-2. How to change user name 4
2-1-1-3. Enable/disable settings 4
2-1-1-4. Adapter communication alarm email 4
2-1-1-5. I/D unit disconnection alarm email 4
2-1-1-6. Saving the settings 4
2-2. WEB User Registration 5
2-2-1. Registration 6
2-2-1-1. How to enter and change user ID 6
2-2-1-2. How to enter and change password 6
2-2-1-3. Changing privileges 6
2-2-1-4. User privileges 6
2-2-1-5. How to change I/D unit, control group, and tenant 7
2-2-1-5-1. How to move units between unsupported and supported column 8
2-2-1-5-2. How to register / cancel supported units 8
2-2-1-6. Registering changed data 8
2-2-1-7. Cancelling the setting 8
2-2-1-8. Confirmation message 8
2-3. Alarm Email Log 9
2-3-1. Email log display for a mail address 9

■Web Browser Settings and Operations
3. Quick Reference 10
4. Using the System 11
4-1. Access and Operation through Web Browser 11
4-1-1. Computer environment requirements 11
4-1-2. Login 11
4-2. Common display area 12
4-2-1. Alarm display list box 12
4-2-2. Refresh window 13
4-3. Layout Screens (Option) 14
4-3-1. Layout screen display method 15
4-3-1-1. Layout screen selection method 15
4-3-1-2. Layout screens 15
4-3-2. Layout screen operations 16
4-3-2-1. Confirming indoor unit names 16
4-3-2-2. How to display popup menu 16
4-3-2-3. Popup menu "Unit details" 16
4-3-2-4. "R/C" Popup menu (Start/stop control method) 17
4-4. Status/Operation 18
4-4-1. Display method 19
4-4-1-1. Selecting displayed floor and area 19
4-4-1-2. Displaying alarms 19
4-4-1-3. Sorting lists 20
4-4-1-4. Displaying sub-units 20
4-4-2. Start and stop control method 20
4-4-2-1. Indoor unit selection method 20
4-4-2-2. Start and stop operation method 21

4-5. Alarm list & alarm log....22
4-5-1. Alarm list....22
4-5-2. Alarm log....23
4-5-2-1. Display method....24
4-5-2-2. Refining the displayed data....24
4-5-2-3. Display range term specification method....24
4-5-2-4. Alarm confirmation....25
4-5-2-5. Downloading alarm log....26
4-6. Schedule/Results....27
4-6-1. Display method....28
4-6-1-1. Selecting displayed floor and area....28
4-6-1-2. Sort lists....28
4-6-1-3. Changing display date....28
4-7. Mode setting (calendar)....29
4-7-1. Display method....30
4-7-1-1. Calendar display....30
4-7-2. Calendar operation....30
4-7-2-1. Registering modes/holidays....30
4-7-2-2. Registering an edited calendar....30
4-7-2-3. Registering in day-of-the-week units....31
4-7-2-4. Registering mode comments....31
4-8. Schedule Operation Time Setting....32
4-8-1. Changing schedule times....33
4-8-1-1. Mode selection....33
4-8-1-2. Setting schedule times....33
4-8-1-3. Confirming schedule time settings....34
4-8-1-4. Editing schedule times....34
4-8-1-5. Registering changed data....34
4-9. Schedule Changes....35
4-9-1. Changing schedule times....36
4-9-1-1. Selecting the date to display....36
4-9-1-2. Setting schedule times....36
4-9-1-3. Confirming schedule time settings....37
4-9-1-4. Editing schedule times....37
4-9-1-5. Registering changed data....37
4-10. Operation time with thermostat on....38
4-10-1. Display method....39
4-10-1-1. Sorting lists....39
4-10-1-2. Detailed display with thermostats off....39
4-11. Accumulated value....40
4-12. Download....41
4-12-1. Downloading....41
4-12-1-1. How to download....41
<Reference> How to Display the File Download Screen....43
5. Supplementary Information....44
6. License Certification....45
7. Preparation....48
7-1. Firewall setting....48
7-2. Installation....50
7-3. Display after restart....55
7-4. Settings....55
7-5. WEB Software Pre-check Sheet....56

■Precautions on Using This Product

★IMPORTANT★

- Before you can use the P-AIMS Web software, first perform a work procedure called "license certification."
  Please perform the license certification referring to "6.License certification".
- Duplication of all or part of this software and documentation without the express consent of the holder of the rights to the above, and transfer of the software to another party, are prohibited by law.
- This software and manual are not to be reproduced, in whole or in part, without permission.
- In principle, each set of this software is purchased for use on a single computer.
- Please note that we bear no responsibility for any effects resulting from the use of this software and manual.
  Panasonic will not be liable for any claim based on errors in calculations of distribution ratios and utility usage caused by faults in this equipment or software.
- The specifications of this software, and the content of this manual, are subject to change without notice, for the sake of improvement.
- This software is used to calculate distribution ratios and charges according to the load ratios estimated for each indoor unit.
  It is not based on the Measurement Act, so it cannot be used for public transactions and similar purposes.
- The content of this manual is limited to explanation of how to use this software.
  It does not cover the usage methods for the operated machinery and optional features, or for the OS etc., so refer also to the relevant manuals for those elements.
- The screen image examples presented in this manual are intended to illustrate the explanation of layouts, and do not represent actual operating conditions. The tenant names displayed are also fictional.
- Displays and operations may differ from the examples in this manual, depending on versions of Excel and the OS used.
- Refer to "Please Read Before Use" for the warranty terms for this software.
- Panasonic will not be liable for any violation of the rights of any third party stemming from use of information in this manual, or for violation of other rights.
- Microsoft, Windows XP and Microsoft Excel are trademarks of Microsoft Corporation in the United States and other countries.
  Other product names are trademarks or registered trademarks of the corresponding companies.
  Other products are copyrights of the corresponding companies.

■Introduction

CZ-CSWWC2 Web Software is used to manage the Air Conditioning Intelligent Management (P-AIMS) System over the Web.

This Web Software must be installed on the same personal computer that runs the P-AIMS System (basic software). By connecting the personal computer to a LAN, the air conditioners can be managed and controlled easily using a Web browser. The user logs into the Web browser using a user ID and password. The authority to operate different air conditioners can be set for each user ID, which enables air conditioners to be operated from a personal computer by each tenant, control group, or indoor unit.

This operation manual describes operations using the Web Software. It does not duplicate explanations of basic functions that appear in the basic software operation manual. Refer also to the basic software operation manual and other optional software operation manuals.

■P-AIMS System Settings and Operations

1. Quick Reference

Menu List

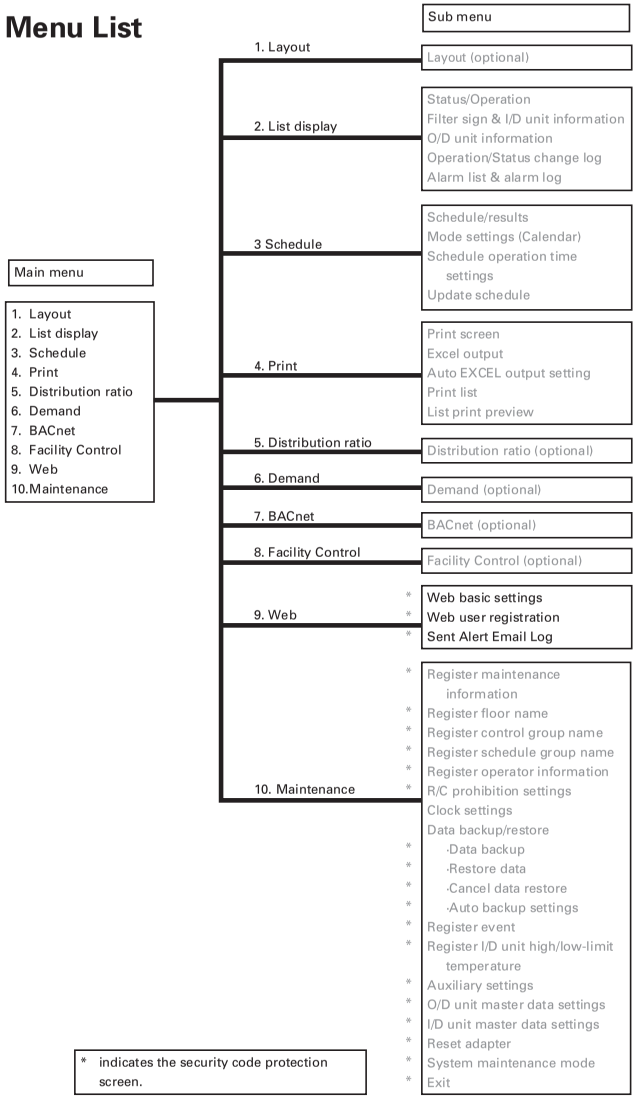

2. Using the System

2-1. Web Basic Settings

[Procedure]
On the menu bar, select Web – Web basic settings.
(Password: level 2)

On this screen, the site name that uses P-AIMS, and alarm e-mail setting can be made. Set the site name and alarm email setting.

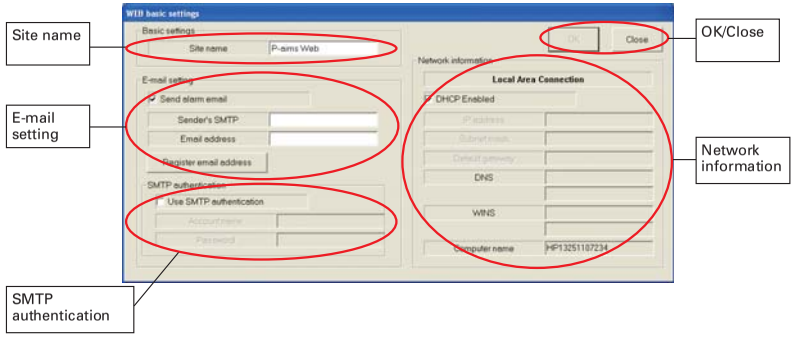

Site name P-aims Web : Enter the site name (40 one-byte characters max.)

Send alarm email : Check the checkbox to send alarm emails.

Sender's SMTP : Enter the IP address (or domain name) of the separately subscribed mail (SMTP) server.

Email address : Enter a sender account name (40 one- byte characters max.)

Register email address : Click here to display the Alarm email recipient settings screen.

Use SMTP authentication : Check the checkbox to use SMTP authentication to block unwanted email. Enter the account name and password.

Local Area Connection : Displays network information of the personnel computer.

OK : Registers the entered WEB basic settings.

Cancel : Restores the previous settings.

Close : Closes the WEB basic settings screen.

2-1-1. Alarm email recipient settings screen

The Alarm email recipient settings screen is displayed when Register email address is clicked. Email addresses and user names can be registered on this screen.

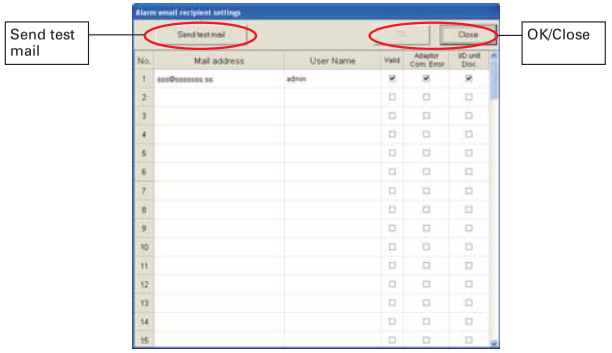

Send test mail : Click the Send Test Email button to send a test email. (Use this button to check the recipient email address.)

OK : Registers the entered WEB basic settings.

Cancel : Restores the previous settings.

Close : Closes the WEB basic settings screen.

Key

- Mail address : Enter the recipient email address (recipient account name)
- User name : Select the user name registered on the "Web user registration screen". An alarm email is sent to the user when an air conditioner that is registered with the user enters alarm status.
- Valid : Sets valid/invalid.
- Adapter Com. Error : An alarm email is sent to the user name when an adaptor that is registered with the user enters communication error status. An alarm email is not sent when the checkbox is not checked.
- I/D unit Disc. : An alarm email is sent to the user when an I/D unit that is registered with the user is disconnected. An alarm email is not sent when the checkbox is not checked.

2-1-1-1. How to enter and change email address

Double click the existing email address to change a part of it. Just enter an address to change the existing email address. The new email address overwrites the existing one. (40 one-byte characters max.)

2-1-1-2. How to change user name

Move the cursor to the user name column to display the user name combo box. User names registered on the Web user registration screen are displayed. Click ▼ and select the corresponding user name.

2-1-1-3. Enable/disable settings

Valid ☑

To enable the registered content, click in the Enable space to add a check mark. Click there again to remove the check mark, disabling the setting.

2-1-1-4. Adapter communication alarm email

Check the check box to send an alarm email to the user when an adapter that is registered with the user enters communication error status.

2-1-1-5. I/D unit disconnection alarm email

Check the check box to send an alarm email to the user when an I/D unit that is registered with the user is disconnected.

> * Note that the I/D unit disconnection alarm email may be sent in large volume if an adaptor error occurs.

2-1-1-6. Saving the settings

The initially disabled button and [Close] button are in the upper right of the screen.

Click the [Close] button to close the screen.

When you changed a setting, the disabled button and [Close] button changes to [OK] and [Cancel] buttones.

Click the [Cancel] button to restore to the previous setting. The [OK] and [Cancel] buttons changes to the disabled and [Close] button.

2-2. WEB User Registration

> [Procedure]
> On the menu bar, select WEB – user registration
> <Password: level 2>

Set user IDs and passwords to access to the Web software, their privileges and operable indoor units.

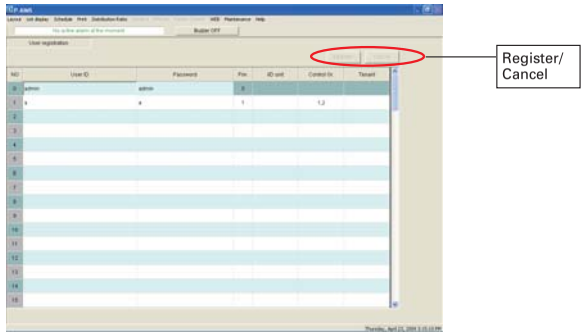

[Register] : Registers changed settings.

[Cancel] : Restores the previous settings.

Key

- User ID :Enter the user ID (20 one-byte characters max.).
- Password :Enter the password (10 one-byte characters max.).
- Priv. :Specify the privilege for the user.
- I/D unit :Specify the indoor unit
- Control Gr. :Specify the control group name.
- Tenant :Specify the tenant name.

> * Click the I/D unit, Control Gr. or Tenant column to display the screen for specifying the indoor unit, control group, or tenant.

2-2-1. Registration

2-2-1-1. How to enter and change user ID

Double click the existing user ID to change a part of it. Just enter a user ID to change the existing one. The new user ID overwrites the existing one. (20 one-byte characters max.)

2-2-1-2. How to enter and change password

Double click the existing password to change a part of it. Just enter a password to change the existing one. The new password overwrites the existing one. (10 one-byte characters max.)

2-2-1-3. Changing privileges

Privilege types are "0: administrative user", "1: special user", and "2: general user."
For only No.0, "0: administrative user" can be set.
For No.001 and later, "1: special user", and "2: general user" can be set.

2-2-1-4. User privileges

		0: administrative user	1: special user	2: general user
Layout display	Display plain view	○	○	○
	Check unit details	○	○	×
	R/C operation	○	○	○
Status/Operation	R/C operation	○	○	○
Alarm list & alarm log	View alarm log	○	○	×
	Check alarms	○	×	×
	Download alarm log	○	×	×
Schedule/results	View schedule/results	○	○	○
Mode settings	Check set schedule mode	○	○	×
	Set schedule mode	○	×	×
	Change schedule mode name	○	×	×
Schedule operation time settings	Check schedule	○	○	×
	Set schedule (I/D unit display)	○	○	×
	Set schedule (Schedule group display)	○	×	×
Update schedule	Check schedule	○	○	×
	Set schedule (I/D unit display)	○	○	×
	Set schedule (Schedule group display)	○	×	×
T/S ON operation time	Operation time display	○	×	×
Accumulated value	Accumulated value display	○	×	×
Download distribution ratio	Download CSV file	○	×	×

2-2-1-5. How to change I/D unit, control group, and tenant

Click the I/D unit, control group, or tenant column to show the following screen.

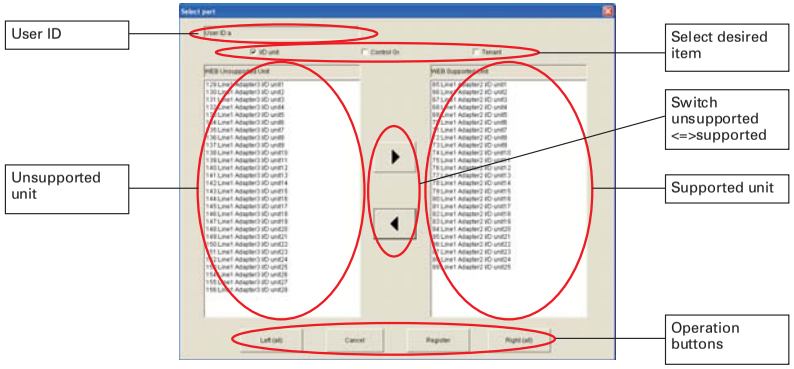

User ID:a : Displays the user ID.

I/D unit Control Gr. Tenant : Checked item is the object for the setting. More than one can be selected.

: Moves units between unsupported unit column and supported unit column.
The right arrow moves units from unspported to supported column.
The left arrow moves from spported to unsupported column.

Left (all) : Selects all units in the left field.

Right (all) : Selects all units in the right field.

Register : Registers the current setting and closes the screen.

Cancel : Closes the screen without registering changed setting.

2-2-1-5-1. How to move units between unsupported and supported column

Click a unit in the WEB unsupported (or supported) unit column. The clicked unit is highlighted. If you clicked a wrong one, click a different unit. This unit is highlighted instead.
To select multiple units, click desired units one by one while pressing the [Ctrl] key. Clicked units are highlighted. If you selected a wrong unit, click that unit again to clear the selection.
To select consecutive units, click the topmost unit to highlight it. Then click the unit at the bottom while pressing the [Shift] key. All units between the top and bottom of the consecutive units are highlighted.

Click ▶ to move the units from unsupported to supported unit column when units are highlighted.

Click ◀ to move the units from supported to unsupported unit column when units are highlighted.

To move inconsecutive units, move them in a few times using the above methods.

2-2-1-5-2. How to register / cancel supported units

Click Register to register the settings when you moved units between unsupported and supported columns. The screen closes afterwards.

Click Cancel to close the screen without registering.

2-2-1-6. Registering changed data

Click Register to register changed data.

2-2-1-7. Cancelling the setting

Click Cancel to restore the previous setting.

2-2-1-8. Confirmation message

A confirmation message appears if you attempt to use another screen without saving the change to the user registration.

Click Yes to close the screen without saving changes.
Click No to continue using this screen.

2-3. Alarm Email Log

[Procedure]
On the menu bar, select WEB – Sent Alert Email Log.

This screen displays alarm email log. Up to 200 alarm email records are retained. When the number of records exceeds 200, the oldest records are deleted.

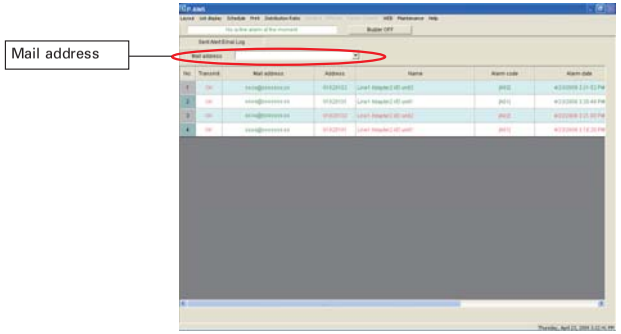

Mail address :Select the email address for alarm email log display.

Key

・Transmit	:Displays delivery status (Sent: OK, Fail: NG)
・Mail address	:Displays the recipient email address
・Address	:Displays the address of the unit for which the alarm occurred.
・Name	:Displays the name of the unit for which the alarm occurred.
・Alarm code	:Displays the alarm code
・Alarm date	:Displays the alarm date
・Date and Time Mail Sent	:Displays the date and time alarm email sent

2-3-1. Email log display for a mail address

Select the email address using Mail address to display the log for that email address. All logs are displayed when an email address is not selected.

■Web Browser Settings and Operations

3. Quick Reference

Web Menu List

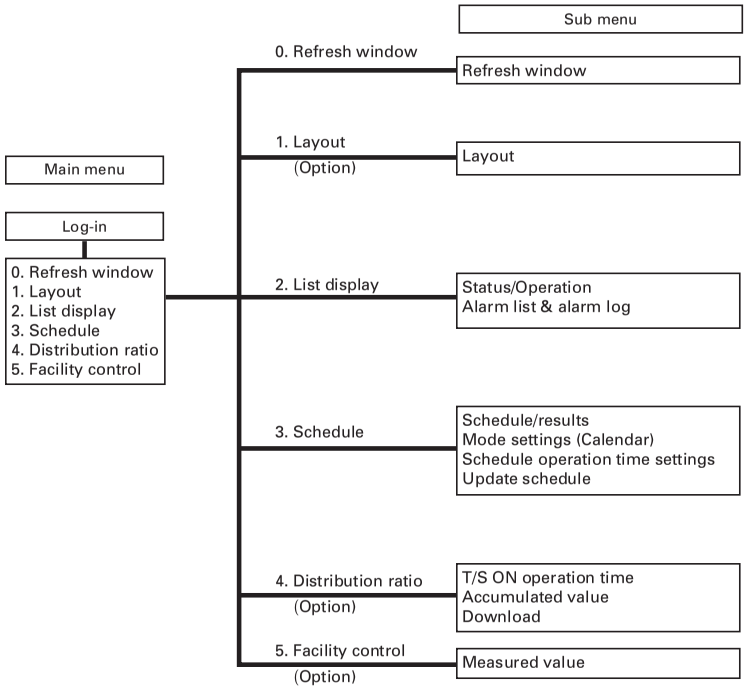

Information

User authority differs according to the user level. User levels and usable functions are indicated in this manual as shown blow.

Administrative user	○	Special user	△	General user	×

※ The user ID defines the authority level. The authority level is not displayed on the Web browser.

○ : All functions can be used.
△ : Some functions cannot be used.
× : Functions cannot be used.

4. Using the System

4-1. Access and Operation through Web Browser

4-1-1. Computer environment requirements

The following environment is required to connect the Web browser running on the customer's PC to the PC running the P-AIMS Web software in order to monitor/operate air conditioners.

Supported browser : Internet Explorer 6.0 or later
Screen resolution : 1024×768 is recommended

4-1-2. Login

Enter the following in the address bar of the Web browser to connect to the PC running the P-AIMS Web software.

http://P-AIMS address: 808/p-aims/login
or
http://P-AIMS PC name: 808/p-aims/login

For example, enter the following if the IP address of the PC running the P-AIMS Web software is "192.168.1.2":
http://192.168.1.2:808/p-aims/login

Or enter the following if DNS is enabled and the name of the PC running the P-AIMS Web software is "p-aims-web":
http://p-aims-web:808/p-aims/login

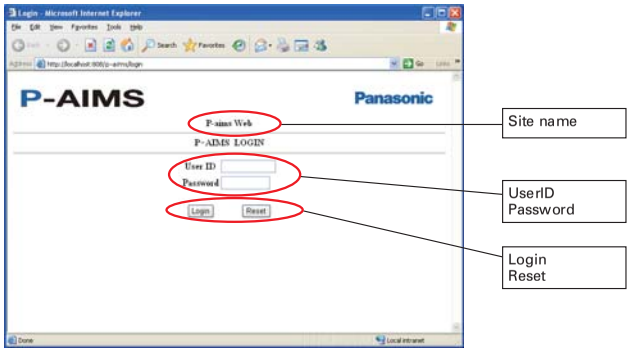

Site name : Shows the site name that was set for P-AIMS.
UserID : Enter the user ID that was set for P-AIMS.
Password : Enter the Password that was set for P-AIMS.

: Click to log in after entering the user ID and password.

Reset : Click to reset the login screen.

4-2. Common display area

The screen shown below appears when you log in to the P-AIMS Web software. The upper part of this screen is common to all screens and is displayed permanently on every screen. Also, any active alarm is displayed in this area. Use the menu to display each screen.

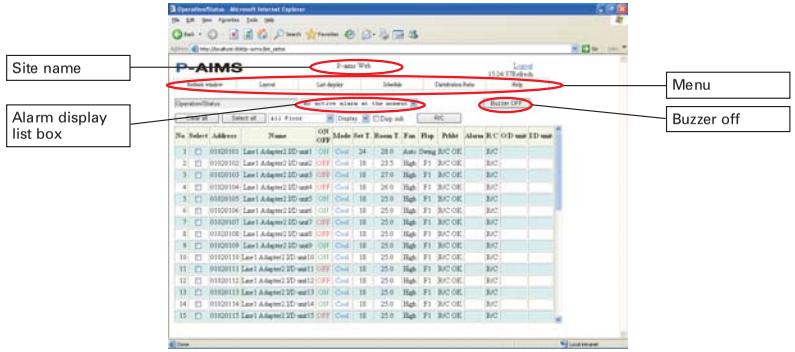

* The menu differs depending on the optional software installed and user authority.
* The common display area is displayed in every screen. However, because the layout screen is displayed in a different window, this area is not displayed.

4-2-1. Alarm display list box

When an alarm occurs, the name of the unit in which the alarm occurred is displayed in the list box in the upper part of the screen. Click at the right of the list box to show the list of current alarms. The scroll bar appears if many alarms are active. When the alarm is reset, that unit disappears from the list.

When an alarm occurs, a buzzer sounds. Click Buzzer OFF to stop the buzzer.

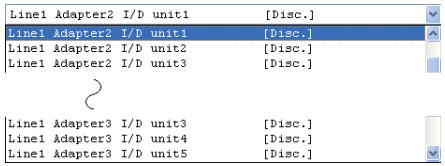

* When an alarm occurs, the alarm information appears in the list box but not on the Status/Operation screen. Refresh the screen to show the alarm information (Refer to 4-2-2 Refresh window).
* The Status/Operation screen is not refreshed automatically when all alarms are off. Refresh the screen display to show remaining alarm information (Refer to 4-2-2 Refresh window).

4-2-2. Refresh window

Only the common display area of the P-AIMS Web software screens is refreshed automatically. Each screen displays the latest information when it is opened, but the actual status will change over time. Click Refresh window in the menu to display the latest information and check the status.

* When an air conditioner is started or stopped using the remote controller, the screen is automatically refreshed after approximately one minute. To refresh earlier, refresh the screen manually.
* The common display area of the screen is refreshed approximately every minute to show the alarm information. Therefore, alarm information is displayed on the Web browser later than in P-AIMS.
* The Refresh window menu is enabled in all screens. However, the Layout screen opens in a different window without the common display area. Use the Refresh button in Internet Explorer to refresh the Layout screen.
* Alternatively, press the [F5] key to refresh screen display.

4-3. Layout Screens (Option)

[Procedure]
Select Layout - Layout from the menu bar.
Optional Layout Display software is required.

Administrative user	○	Special user	○	General user	△

These screens display layout diagrams to check the layout and monitor the status of indoor units. Indoor unit operation can also be started and stopped from this screen.

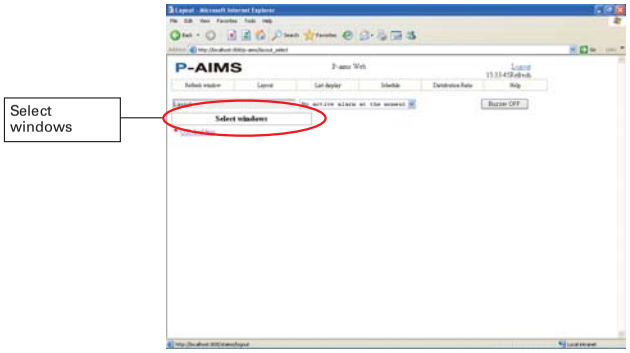

* Only I/D units are displayed in the Web software layout diagram.
* Only units with a registered user ID are displayed.

4-3-1. Layout screen display method

4-3-1-1. Layout screen selection method

(1) Click the group name "OX building" in the Select windows area. The following names are displayed: "The first floor," "The second floor," "The third floor," and "The fourth floor".

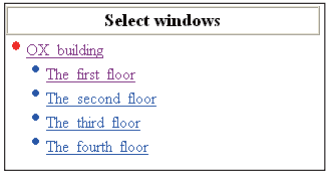

(2) Click "The first floor."
The layout of the first floor is displayed in a new window. Each time a name is clicked ("The first floor" to "The fourth floor"), a new window opens to display the layout of the corresponding floor.

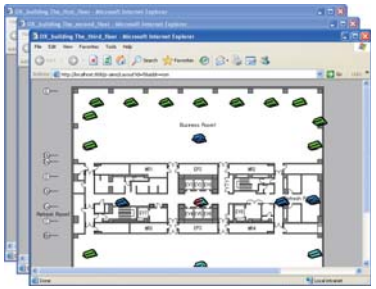

4-3-1-2. Layout screens

The layout is displayed in a new window.

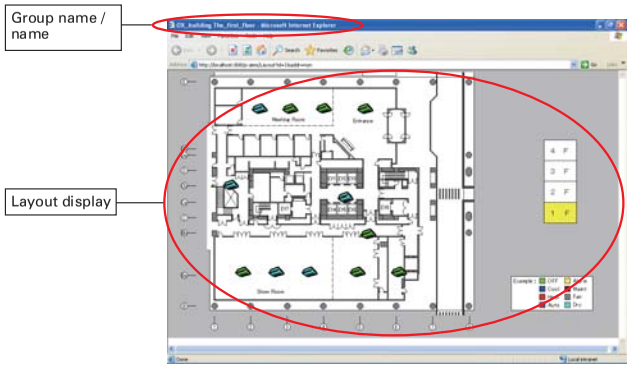

4-3-2. Layout screen operations

4-3-2-1. Confirming indoor unit names

To check the names of an indoor unit in the layout screen, move the mouse pointer over the desired indoor unit. The mouse pointer changes to and the address number and name are displayed.

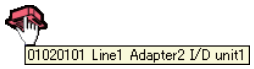

4-3-2-2. How to display popup menu

To display the popup menu, move the mouse pointer over the desired indoor unit. Right-click the unit when the mouse pointer changes to . When an indoor unit is selected, the unit appears enclosed in a square frame. Right-click in the frame to display the popup menu.

* The Unit details menu item is not displayed if the user has General user authority.

4-3-2-3. Popup menu "Unit details"

Select Unit details in the popup menu to display a screen that shows "Unit details," "Error log," and "Schedule."

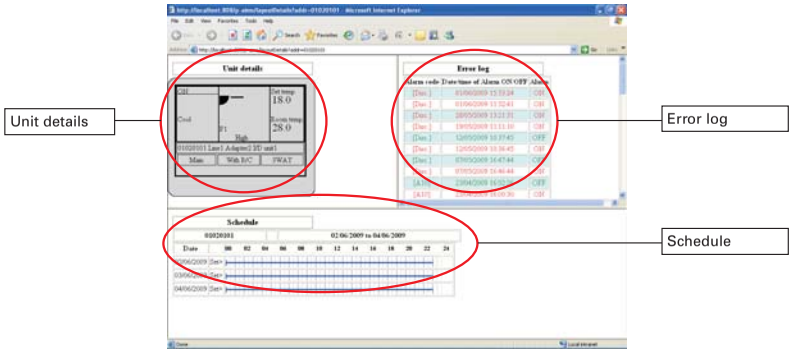

* The screen is not displayed if the user has General user authority.

4-3-2-4. "R/C" Popup menu (Start/stop control method)

Select R/C in the popup menu to display the Remote controller screen. Start, stop, mode, set temperature, fan speed, flaps, and central control can be changed on this screen.

Click Transmit to transmit the settings to the unit. Click the Cancel button to close the R/C screen without transmitting the settings.

* For functions unavailable for the authority level, the buttons are displayed in gray and disabled.

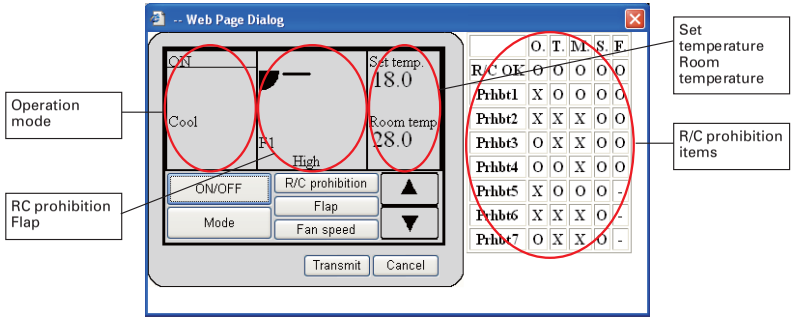

ON/OFF :Switches between "ON" and "OFF" every time it is clicked.

Mode :Switches between "Auto", "Heat", "Cool", "Fan", and "Dry" every time it is clicked.

R/C prohibition :Switches between "RC OK (blank)", "RC Prohibition 1" to "RC Prohibition 7" every time it is clicked.

* RC Prohibitions 1 to 4 are for CZ-CFUNC2.

Flap :Switches between "swing" and "F1" to "F5" every time it is clicked. Some flap settings are unavailable in some modes.

Fan speed :Switches between "Auto", "High", "Mid", and "Low" every time it is clicked.

▲ ▼ :Changes the room temperature setting.

Transmit :Transmits set content to the indoor unit.

* The unit setting is updated in about 1 minute after Transmit is clicked.

R/C prohibition items: Displays currently set R/C prohibition items.
O: Operable
X: Prohibited

* Buttons disabled due to user authority restrictions or R/C prohibition settings are displayed gray.

4-4. Status/Operation

[Procedure]
On the menu , select “List display” – “Status/Operation”.

Administrative user	○	Special user	○	General user	△

Monitor the status of indoor units here. The operation, mode, set temperatures, room temperatures, fan speeds, flaps, central control, alarms, and absence or presence of remote control units can be monitored. Device operation can also be started and stopped from this screen.
Indoor units can be monitored and controlled by floor and area.

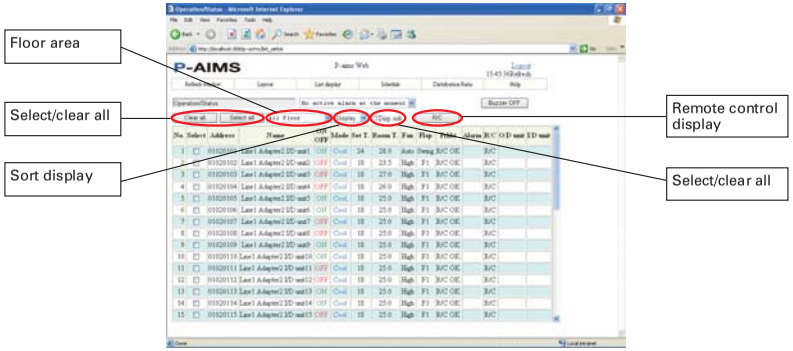

Clear all / Select all	: Use to clear selections and select all.
All Floor	: Use to select floor areas.
Display	: Use to select the display order.
Disp sub	: Sub-units are also displayed.
R/C	: Use remote control units to stop and start indoor units individually.

Key

- Select :Selects the indoor unit to control.Click to add a check mark.
- Address :Display the address numbers of indoor units.
- Name :Displays the names of the indoor units.
  Normal: black, sub unit: blue, W/O connection: red, maintenance: gray.
- Operation :Monitors the operation status of indoor units.
  ON: Green, OFF: Red
- Mode :Displays the operation modes of indoor units.
  A/Cool, A/Heat: Green, Cool: Blue, Heat: Red, Fan: Gray, Dry: Light blue
- Set T. :Displays the set temperature. The range of temperatures that can be set varies, depending on the connected air conditioner model and the operation mode.
- Room temperature :Displays room temperatures.
- Fan :Displays fan speeds.
  Automatic (automatic fan speed), High, Mid. Low (Displayed as - - if the model concerned cannot display this information.

- Flap :Displays the directions of flaps.
  Swing, F1 - F5 (warm, fan: F1 - F5, for cooling: F1 - F3)
  Displayed as - - if the model concerned cannot display this information.
- Prhbt :Central control (local control prohibited)
  Individual (no prohibition), prohibit 1=prohibit 7 (Settings can be made for various types of central control (Prohibition)
- Alarm :Displays alarm codes if an alarm has been issued by an indoor unit.
  Displays Maintenance if “Register maintenance information” applies.
- RC :Displays “Yes” for indoor units that have remote control
- O/D unit :Displays outdoor unit codes.
- I/D unit :Displays indoor unit codes.

* If it is not possible to communicate with the adapter, or if the model used cannot display the content, the column will display “- -”.

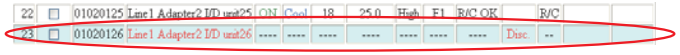

The names of indoor units which are unconnected are displayed in red. Their operating status cannot be checked.

4-4-1. Display method

4-4-1-1. Selecting displayed floor and area

First, select the floor and area.
If the floor and area is “All Floor”, all registered indoor units are displayed. Click the button at the right edge of the floor selection list to display a list of registered floors and areas. From the list, select the floor or area to monitor.

```
All Floor
All Floor
  +--Floor 1
  |  +--Floor 4
  +--Floor 2
     +--Floor 5
```

4-4-1-2. Displaying alarms

When an alarm is issued for an indoor unit, the alarm is automatically displayed in the alarm display list box.
The Status/Operation screen is not refreshed automatically so that the alarm information is not displayed. Refresh the window to update the status/operation screen. The error code is displayed in the Alarm column as shown below.
Nothing is displayed if there are no current alarms.

No.	Select	Address	Name	ON OFF	Mode	Set T.	Room T.	Fan	Flap	Prhbt	Alarm	R/C
1	☐	01020101	Line1 Adapter2 I/D unit1	ON	Cool	24	28.0	Auto	Swing	R/C OK		R/C
2	☐	01020102	Line1 Adapter2 I/D unit2	OFF	Cool	18	23.5	High	F1	R/C OK	A10	R/C

* The alarm display is automatically removed when the alarm has been restored. The Status/Operation screen is not refreshed automatically so that the alarm information remains unchanged. Refresh the window to update the status/operation screen.

4-4-1-3. Sorting lists

Select the desired display order from the pull-down menu.

Floor :Display is in order of floor name registration.
O/D unit :Display is in order of outdoor unit addresses, from the most recent.
Address :Display is in order of addresses, from the most recent.
Display :Display is in order of most recent registrations to the indoor unit master.

4-4-1-4. Displaying sub-units

Click Disp sub to add a checkmark and display the sub-units. Click again to clear the checkmark and hide the sub-units. Stop and start operations cannot be performed on sub-units.

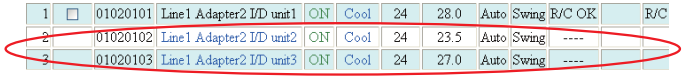

1	☐	01020101	Line1 Adapter2 I/D unit1	ON	Cool	24	28.0	Auto	Swing	R/C OK			R/C
2		01020102	Line1 Adapter2 I/D unit2	ON	Cool	24	23.5	Auto	Swing	----			
3		01020103	Line1 Adapter2 I/D unit3	ON	Cool	24	27.0	Auto	Swing	----			

The names of sub-units are displayed in blue.

* Setup and operation of sub-units is linked to the main unit, so starting/stopping them or changing their settings is impossible.
* To check individual alarms from sub-units, it is necessary to display the sub-unit.

4-4-2. Start and stop control method

4-4-2-1. Indoor unit selection method

To start or stop a unit, click on the name of the indoor unit to control. The selected locations have ☑ check marks in the selection column. Click again on the same location to remove the check mark, canceling the selection.

No.	Select	Address
1	☑	01020101

To select all indoor units, click the Select all button in the upper left of the screen.
To cancel selections of all indoor units, click the Clear all button in the upper left of the screen. Unconnected units and sub-units cannot be selected.

* After selecting the indoor unit, transmit the settings to the actual indoor unit on the Remote Control screen.

4-4-2-2. Start and stop operation method

Click the R/C button in the upper right of the screen when an indoor unit is selected to display the remote control unit screen. The Remote Control screen can be used to change operation, mode, temperature setting, fan speed, flap and prohibition settings. Click the set button, then on the Transmit button to send the setting content to the unit. Click the Cancel button to avoid sending the settings. The Remote Control screen closes.

* When the R/C button is clicked without selecting any indoor units, the R/C screen does not appear
* Buttons for unauthorized functions are displayed in gray and disabled.

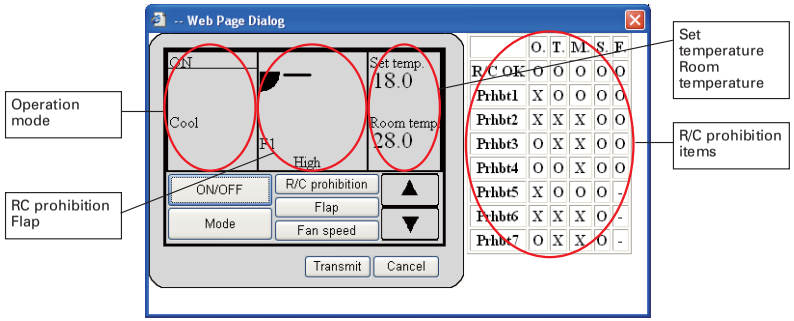

ON/OFF :Switches between "ON" and "OFF" every time it is clicked.
Mode :Switches between "Auto", "Heat", "Cool", "Fan", and "Dry" every time it is clicked.
R/C prohibition :Switches between "RC OK (blank)", "RC Prohibition 1" to "RC Prohibition 7" every time it is clicked.

* RC Prohibitions 1 to 4 are for CZ-CFUNC2.

Flap :Switches between "swing" and "F1" to "F5" every time it is clicked.
*Some flap settings are unavailable in some modes.
Fan speed :Switches between "Auto", "High", "Mid", and "Low" every time it is clicked.
▲ ▼ :Changes the room temperature setting.
Transmit :Transmits set content to the indoor unit.

* The unit setting is updated in about 1 minute after Transmit is clicked.

R/C prohibition items: Displays currently set R/C prohibition items.
O: Operable
X: Prohibited

* Buttons disabled due to user authority restrictions or R/C prohibition settings are displayed gray.

4-5. Alarm list & alarm log

[Procedure]
On the menu bar, select "List display" – "Alarm list & alarm log".

Administrative user	○	Special user	△	General user	×

This displays the log of alarm occurrence and restoration to date.

4-5-1. Alarm list

This displays current alarms.

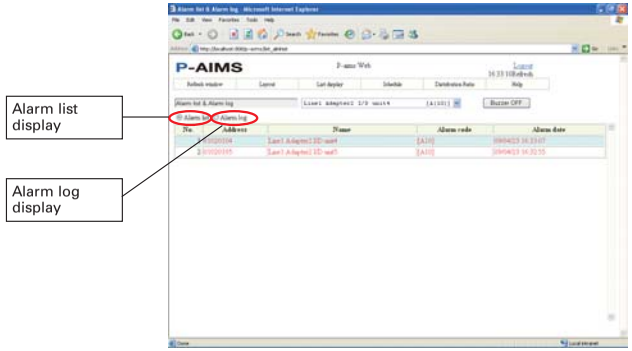

Alarm list :Displays the alarm list.
Alarm log :Displays alarm history.

Key
- Address :Displays the addresses of alarms.
- Name :Displays the names of devices which have issued alarms.
- Alarm code :Displays alarm codes at the times alarms are issued.
- Alarm date :Displays the date and time at which the alarm occurred.

* The Alarm list or Alarm log display is not refreshed automatically when the alarm status changes. Refresh the window to update the display. However, when you switch between the Alarm list and Alarm log display, it is automatically refreshed.

4-5-2. Alarm log

This displays the log of alarm occurrence and restoration to date.
Display conditions can be set in order to display only certain alarms.

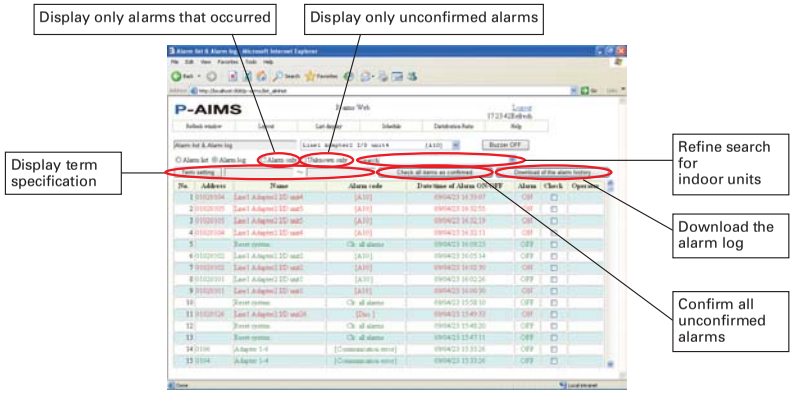

Alarm list :Displays the alarm list.
Alarm log :Displays alarm log.
Alarm only :Displays only the log of alarms which have occurred.
Unknown only :Displays only the log of alarms which have not been confirmed.
Search :Use to select the indoor units to display.
Term setting :Use to specify the period of log to display.
Check all items as confirmed. :Confirm all unconfirmed alarms.
Download of the alarm history :Download the alarm log data.

* Check all items as confirmed. and Download of the alarm history are not displayed for a Special user.

Key
- Address :Displays the addresses of alarms.
- Name :Displays the names of devices which have issued alarms.
- Alarm code :Displays alarm codes at the times alarms are issued/restored.
- Alarm date :Displays dates and times when alarms are issued/restored.
- Alarm :Displays occurrence/restoration status of alarms.
- Check :Displays the status of alarm confirmation by the operator. Add a check mark to confirmed alarms.
- Operator :Displays the name of the person who confirmed the alarm.

* A Special user cannot change the Check and Operator columns.

4-5-2-1. Display method

Click the ◯ Alarm log , to display the alarm log. The log of alarms occurring to date, and their restoration status, can be checked here.

4-5-2-2. Refining the displayed data

Check the ☐ Alarm only checkbox to display only alarms which have occurred. Click again to clear the checkmark and revert the display to its previous state.

Check the ☐ Unknown only checkbox to display only alarms which have not been confirmed. Click again to clear the checkmark and revert the display to its previous state.

> * These two functions can be used in combination.
> For example, if both the ☐ Alarm only and the ☐ Unknown only are checked, the display shows only current alarms that are unconfirmed.

Selecting the indoor unit to display refines the display to cover only that indoor unit.

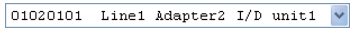

Click ⌄ by the Search dropdown list to display the registered I/D units.

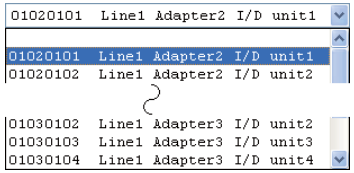

Click on the indoor unit to display. History is displayed for the selected indoor unit.

The ☐ Alarm only and ☐ Unknown only can be used together to display only alarms for the selected indoor unit, or only unconfirmed alarms.

> * Select the blank at the top of the list to return to display of all logs.

4-5-2-3. Display range term specification method

Click the Term setting button to display the Term Setting screen.

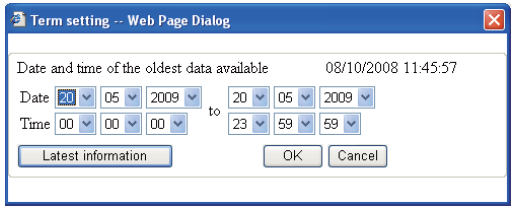

Specify the start and end dates.
Log is displayed for the specified range.

> * Set an end date that is later than the start date. Results will not be displayed correctly if the end date is earlier than the start date.

Specify the display term, and then click the OK button to display history throughout the specified term.
To close the Term Setting screen, click the Cancel button.
To cancel the term setting and display the latest log, click the Latest information button without specifying a term.

> * Once a term is specified, the term specification will be as same as previous one when this screen is displayed again.
> * The maximum number of display items is 2,000.

4-5-2-4. Alarm confirmation

After confirming alarms, the operator should add check marks to those alarms to manage their status.

Date/time of Alarm ON/OFF	Alarm	Check
02/06/2009 08:26:35	OFF	☑

Click in the Confirmation column for the confirmed alarms to add check marks.
Click on a check mark to remove it.

Click the operator column to display the screen shown below.
Click ⌄ and select the name of the operator.

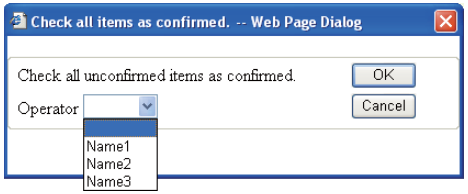

Click OK. The selected name is set in the Operator column and the screen closes.
Click Cancel to close the screen.

> * This setting can only be changed by an Administrative user.
> * Alarms cannot be confirmed just by checking the Check column and registering the operator name.

4-5-2-5. Downloading alarm log

The displayed alarm information can be downloaded.
The following shows how to save the data.

(1) Click [Download of the alarm history] to display the File Download screen.

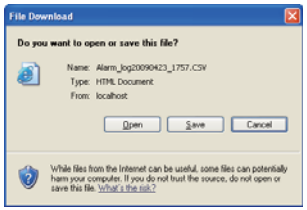

The Information Bar may be displayed due to the Internet Explorer security settings. If the Information Bar appears, follow the instructions displayed.
A message "Did you notice the Information Bar?" may be displayed, as shown to the right.

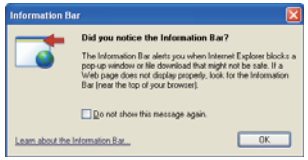

(2) Click [Open] to download the data and display it in Excel.

If Microsoft Excel is not installed, the data is displayed in Internet Explorer. In this case, it may not be possible to display some characters, depending on the language. Save the downloaded file.

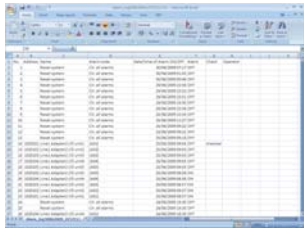

(3) Click [Save] to open the Save As dialog box. Specify the folder to save the file in.

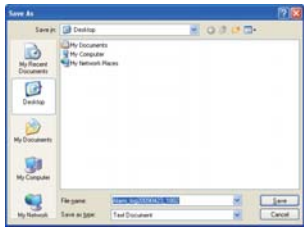

(4) When the saving is complete, the Download complete screen appears as shown in the right.
*It is not displayed depending on the setting.

Click [Open] to display the data in Excel. If Excel is not installed, the data is displayed in Notepad.

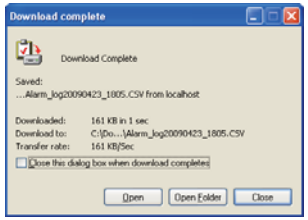

* We recommend installing Microsoft Excel to review alarms in detail.
* This setting can only be changed by an Administrative user.

4-6. Schedule/Results

[Procedure]
On the menu bar, select "Schedule" – "Schedule/results".

Administrative user	○	Special user	○	General user	○

This displays the schedule and results as bar graphs.
The display term can be specified to check the presetting status, the working status of a device relative to its schedule, or other information.

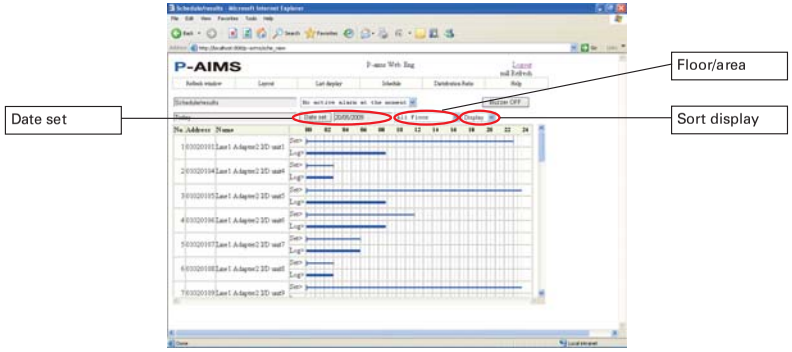

: Use to select the dates to display.

All Floor : Use to select floor areas.

Display : Use to select the display order.

Key
- Address : Displays the addresses of indoor units.
- Name : Displays the names of the indoor units.
- Graph : Upper Schedules. Lower: Displays results.

4-6-1. Display method

4-6-1-1. Selecting displayed floor and area

First, select the floor and area.
If the floor and area is "All Floor", all registered indoor units are displayed.

Click the button on the right edge of the floor selection list to display a list of registered floors and areas.

From the list, select the floor or area to monitor.
A list of indoor units registered within that floor and area is displayed.

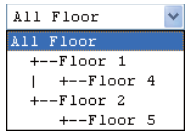

4-6-1-2. Sort lists

Select the desired display order from the pull-down menu.

Floor :Display is in order of floor name registration.
O/D unit :Display is in order of outdoor unit addresses, from the most recent.
Address :Display is order of addresses, from the most recent.
Display :Display is in order of most recent registrations to the indoor unit master.

4-6-1-3. Changing display date

When the Schedule/results screen is displayed the first time, it displays data for the current day. To display the schedule/results for another day, click . The screen shown to the right is displayed.

Click and select the date.

Then, click OK to change the display date and close the screen.

Click Cancel to close the Date set screen.

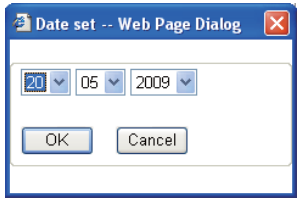

4-7. Mode setting (calendar)

[Procedure]
On the menu bar, select "Schedule" – "Mode settings (Calendar)".

Administrative user	○	Special user	△	General user	×

Set the Calendar operation mode.

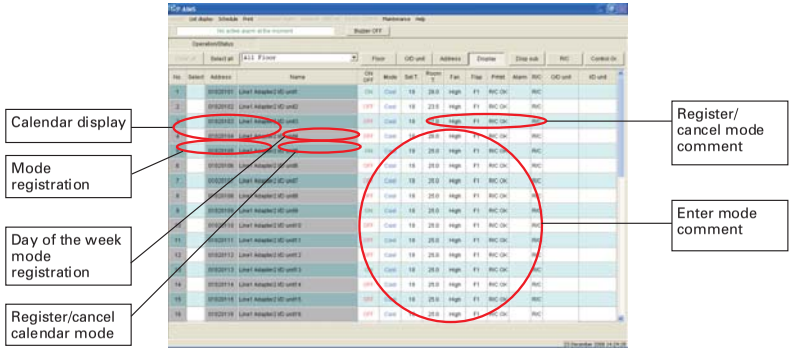

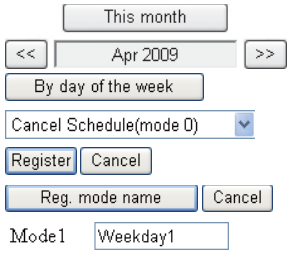

: Use to change the calendar to be displayed.
: Use to set the schedule by day of the week.
: Use to specify the mode.
: Register/cancel the calendar mode.
: Register/cancel the mode name.
: Use to change the mode name.

4-7-1. Display method

4-7-1-1. Calendar display

When the Mode setting screen is displayed the first time, the calendar for the current month is displayed.

Click the << >> buttons on the left and right of the place where the current date and month are displayed above the current calendar, to switch the calendar to earlier and later months.

Click the This month button to display the calendar for the current month.

4-7-2. Calendar operation

4-7-2-1. Registering modes/holidays

Specify the desired mode in the mode registration combo box.
Then click the desired date. The selected mode number is registered in the area below the date.
To change to another mode, select another mode number and click the registered date. The mode number will be overwritten. The mode, "Cancel schedule (mode 0)" is used to cancel the set mode. (The mode number below the date is deleted.)
When you select the "Register holiday" mode and then click the date on the calendar, the date is displayed in red. Click again to revert the date display to the original color.

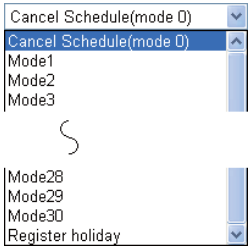

> * Even if holidays have been registered on the calendar, the schedule will not necessarily switch to holiday operation. Holiday operation requires registration of a schedule mode number for holidays on the calendar.

4-7-2-2. Registering an edited calendar

Once you have finished editing calendar mode numbers and holiday settings, click the Register button to register them.
Click the Cancel button to revert to the settings before editing.

4-7-2-3. Registering in day-of-the-week units

You can specify a set period and only make the mode settings once for each week.

Click the By day of the week button to display the following screen for setting schedule by day of the week.

Click by the date displays to specify the term (start and end date) to set the weekly mode.

Click in the combo box for each day of the week and select the mode number.
After registering the mode for each day of the week (it is not necessary to set mode numbers for all days of the week), press the Register button to register the mode number into the calendar for the specified period. Click the Cancel button to cancel registration by the day of the week.

4-7-2-4. Registering mode comments

To edit mode comments, click in the comment area of the mode list.
When the cursor appears, edit the comment.

Once you have finished editing the comment, click the Reg. mode name button to register the setting.
Click the Cancel button to restore the setting before editing.

> * The schedule mode names are also used as the mode names for settings on the Schedule – Schedule Operation Time Setting screen.
> * Mode registrations to the calendar can be made for a period of one year, starting from the day after the registration is made.
> * Modes cannot be changed for dates that have passed.

> <Information> Requests to the Administrative user
> * To enable other users to change schedules using the Web software, register schedules for units instead of for schedule groups.
> * If the usage by the users can vary according to the day of the week, we recommend setting a different mode for each day of the week. This allows air conditioners to operate on a weekly schedule.

4-8. Schedule Operation Time Setting

[Procedure]
On the menu bar, select "Schedule" - "Schedule Operation Time Setting".
*The screen and functions differ according to whether or not a schedule group is registered.

Administrative user	○	Special user	△	General user	×

Screen if no schedule group is registered

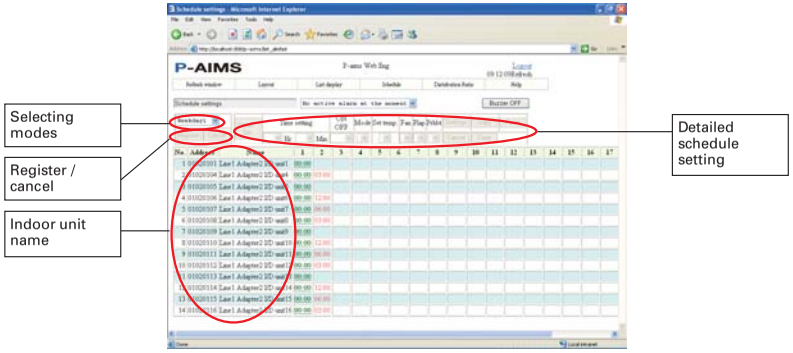

Screen if a schedule group is registered

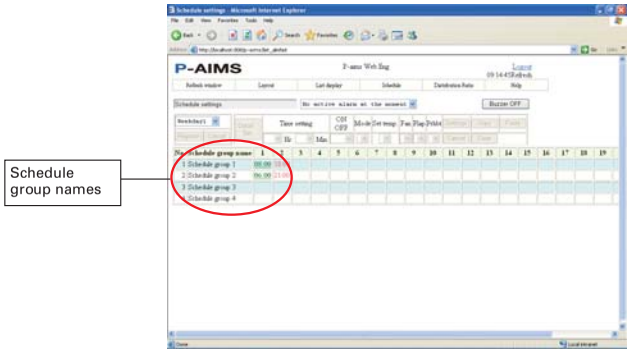

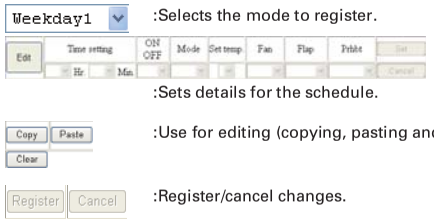

:Selects the mode to register.

:Sets details for the schedule.

:Use for editing (copying, pasting and clearing settings).

:Register/cancel changes.

Key

- Address :Displays the address numbers of indoor units. (If no schedule group has been registered)
- Name :Displays the names of indoor units. (If no schedule group has been registered)
- Schedule group name :Displays the schedule group name. (If a schedule group has been registered)
- Schedule time :Displays scheduled times.

* Schedule time registrations can only be applied to the main unit. Sub-units operate according to the schedule of the main unit.
* The underlined display (08:00) of set items indicates that other related items have also been set, such as modes other than On/Off and set temperatures.

4-8-1. Changing schedule times

4-8-1-1. Mode selection

Select the mode for registering the schedule.
Click to select the mode name to register schedule time.

4-8-1-2. Setting schedule times

Click the cell to set the schedule for. The background turns yellow.

Under this condition, click the Edit button to enable registration of detailed settings.

Set the set times and necessary items (ON/OFF, modes, set temperatures, fan speeds, flaps and prohibitions).
Click on in each cell and select the item to set.

After editing the detailed settings, click the Set button

Click the Cancel button to cancel detailed settings.

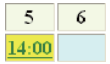

* When making time settings, start from earlier times and proceed to later times. It is not possible to set the same time as an existing setting.
  Example
  10:00 On: :17:00 On
  With the scheduled operation time settings as shown in the example above, it is only possible to set times between the existing times in the range of 10:01–16:59.

4-8-1-3. Confirming schedule time settings

If you select a time cell with a scheduled time setting, the current settings are displayed in gray in the detailed settings column.

4-8-1-4. Editing schedule times

Use the editing buttons on the screen to edit the schedule times.

Copy : Select by clicking on the time cell to copy.
Click the Copy button to store the selected time cell in memory.

Paste : Select the target time cell, and then click the Paste button to paste the copied time.

Clear : Select the time cell to clear, and then click the Clear button to delete the registered time.

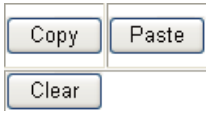

* Pasting into the time cell for the same indoor unit is not possible because the times would be the same for the unit.
* Even on a different indoor unit, pasting is impossible if there is an existing registration for the same time or an earlier time.

4-8-1-5. Registering changed data

If the schedule time has been changed, click the Register button at the upper-left of the screen to save the settings. All changed data is saved.

Click the Cancel button to return all changed data to its previous state.

4-9. Schedule Changes

[Procedure]
On the menu bar, select "Schedule" – "Update Schedule".
*The screen and functions differ according to whether or not a schedule group is registered.

Administrative user	○	Special user	△	General user	×

Screen if no schedule group is registered

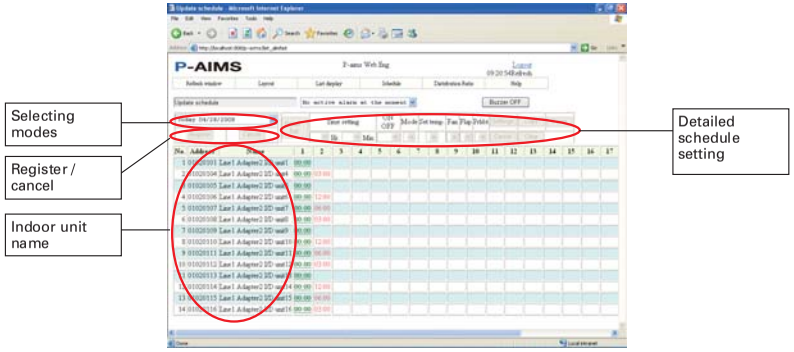

Screen if a schedule group is registered

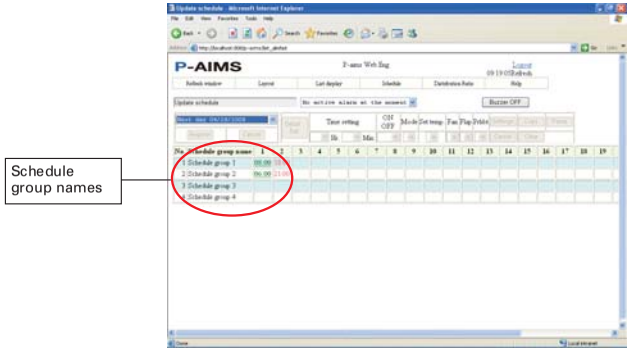

:Select the date to change. (The same day, next day, and day after that can be specified).

:Sets details for the schedule.

:Use for editing (copying, pasting and clearing settings).

:Register/cancel changes.

Key

- Address :Displays the address numbers of indoor units. (If no schedule group has been registered)
- Name :Displays the names of indoor units. (If no schedule group has been registered)
- Schedule group name :Displays the schedule group name. (If a schedule group has been registered)
- Schedule time :Displays scheduled times.

> * Schedule time registrations can only be applied to the main unit. Sub-units operate according to the schedule of the main unit.
> * The underlined display (08:00) of set items indicates that other related items have also been set, such as modes other than On/Off and set temperatures.

4-9-1. Changing schedule times

4-9-1-1. Selecting the date to display

Select the date to display

Click and select the date to display.

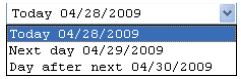

4-9-1-2. Setting schedule times

Click the cell to set the schedule for. The background turns yellow.

Under this condition, click the Edit button to enable registration of detailed settings.

Set the set times and necessary items (ON/OFF, modes, set temperatures, fan speeds, flaps and prohibitions).

Click on in each cell and select the item to set.

After editing the detailed settings, click the Set button

Click the Cancel button to cancel detailed settings.

> * When making time settings, start from earlier times and proceed to later times. It is not possible to set the same time as an existing setting.
> Example
> 10:00 On: :17:00 Off
> With the scheduled operation time settings as shown in the example above, it is only possible to set times between the existing times in the range of 10:01–16:59.

4-9-1-3. Confirming schedule time settings

If you select a time cell with a scheduled time setting, the current settings are displayed in gray in the detailed settings column.

4-9-1-4. Editing schedule times

Use the editing buttons on the screen to edit the schedule times.

Copy : Select by clicking on the time cell to copy.

Click the Copy button to store the selected time cell in memory.

Paste : Select the target time cell, and then click the Paste button to paste the copied time.

Clear : Select the time cell to clear, and then click the Clear button to delete the registered time.

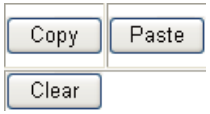

> * Pasting into the time cell for the same indoor unit is not possible because the times would be the same for the unit.
> * Even on a different indoor unit, pasting is impossible if there is an existing registration for the same time or an earlier time.

4-9-1-5. Registering changed data

If the schedule time has been changed, click the Register button at the upper-left of the screen to save the settings. All changed data is saved.

Click the Cancel button to return all changed data to its previous state.

4-10. Operation time with thermostat on

[Procedure]
On the menu bar, select "Distribution ratio" - "T/S ON operation time".
(Optional Distribution Ratio software is required.)

Administrative user	○	Special user	×	General user	×

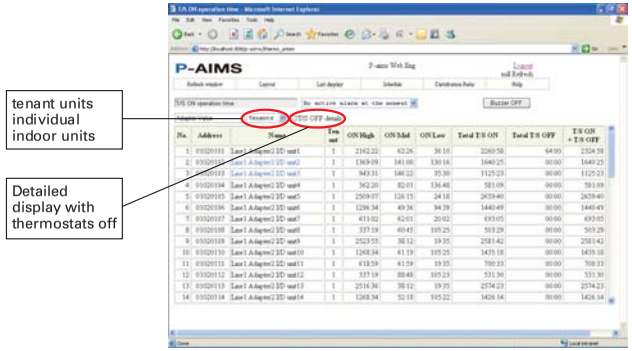

Tenants : Selects the display order.
☐ T/S OFF details : Displays details of thermostat off times.

Key

- Address : Displays the addresses of indoor units.
- Name : Displays indoor unit names or tenant names.
- Tenant : Displays tenant numbers.
- ON/High : Displays the time of operation with the thermostat on and high fan speed.
- ON/Mid : Displays the time of operation with the thermostat on and medium fan speed.
- ON/Low : Displays the time of operation with the thermostat on and low fan speed.
- Total T/S ON : Displays the total time of operation with the thermostat on and high, medium and low fan speed.
- OFF/High : Displays the time of operation with the thermostat off and high fan speed. (If thermostat off detailed display is used)
- OFF/Mid : Displays the time of operation with the thermostat off and medium fan speed. (If thermostat off detailed display is used)
- OFF/Low : Displays the time of operation with the thermostat off and low fan speed. (If thermostat off detailed display is used)
- Total T/S OFF : Displays the total time of operation with the thermostat off and high, medium and low fan speed.
- T/S ON + T/S OFF : Displays the total operation time at all fan speeds, with the thermostat both on and off.

4-10-1. Display method

4-10-1-1. Sorting lists

Click and select the desired display order from the sorting combo box.

Tenants : The list is displayed in tenant units.
I/D unit : The list is displayed in individual indoor units.

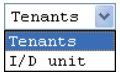

4-10-1-2. Detailed display with thermostats off

When you click ☐ T/S OFF details to add a checkmark, "OFF/High", "OFF/Mid", " OFF/Low" are displayed in the list. Click again to clear the checkmark, and "OFF/High", "OFF/Mid"," OFF/Low" disappears.

4-11. Accumulated value

[Procedure]
On the menu bar, select "Distribution ratio" – "Accumulated value".
(Optional Distribution Ratio software is required.)

Administrative user	○	Special user	×	General user	×

This displays the current value of the adaptor's accumulated pulses.

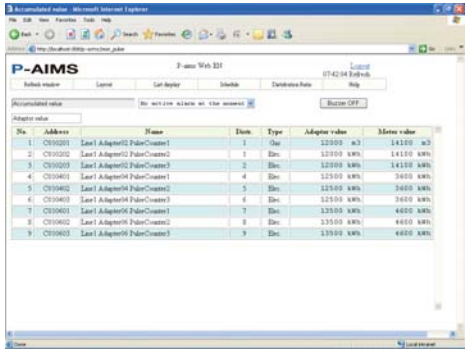

Key

- Address :Displays the addresses of indoor units.
- Name :Displays the names of accumulated pulse meters.
- Distr. :Displays distribution group numbers.
- Type :Displays the types of pulse meter.
- Adapter value :Displays the current values of the adapters on the pulse meter.
- Meter value :This displays the value with the addition of balance data between an arbitrary value for the pulse meter and the adapter value.

4-12. Download

[Procedure]
On the menu bar, select "Distribution ratio" – "Download".
(Optional Distribution Ratio software is required.)

Administrative user	○	Special user	×	General user	×

Download CSV files calculated on the cut-off day.

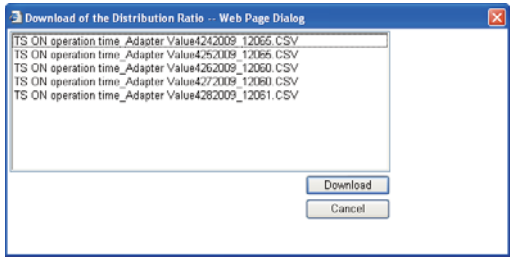

Download : Use to download

Cancel : Use to close the Download of the Distribution Ratio screen.

4-12-1. Downloading

4-12-1-1. How to download

The download procedure is described below.

(1) Click the file to download to highlight it

(2) Click Download to display the File Download screen.

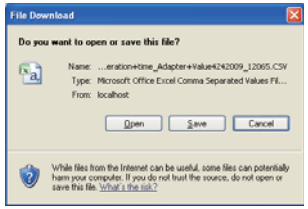

The Information Bar may be displayed due to the Internet Explorer security settings. If the Information Bar appears, follow the instructions displayed.
A message "Did you notice the Information Bar?" may be displayed, as shown to the right.

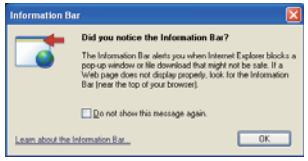

(3) Click [Open] to download the data and display it in Excel.

If Microsoft Excel is not installed, the data is displayed in Internet Explorer. In this case, it may not be possible to display some characters, depending on the language. Save the downloaded file.

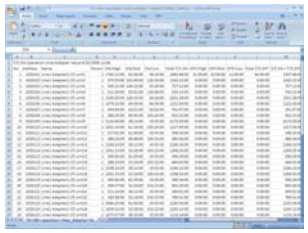

(4) Click [Save] to open the Save As dialog box. Specify the folder to save the file in.

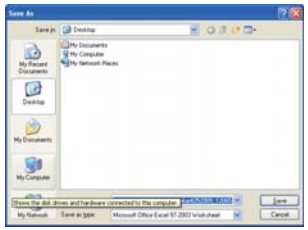

(5) When the saving is complete, the Download complete screen appears as shown in the right.
*It is not displayed depending on the setting.

Click [Open] to display the data in Excel. If Excel is not installed, the data is displayed in Notepad.

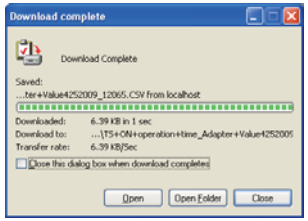

* We recommend installing Microsoft Excel to calculate distribution ratio data.
* Excel is used to calculate and check data.
* Only an Administrative user can save this data.

<Reference> How to Display the File Download Screen

If the File Download screen is not displayed even if you click [Download], follow the procedure below to change the Internet Explorer settings.

(1) On the [Tools] menu of Internet Explorer, click [Internet Options] and the Internet Options screen is displayed. Click the [Security] Tab.

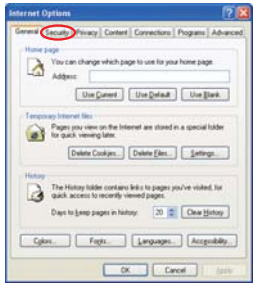

(2) The Internet Options screen switches to the Security Tab.
Click [Custom Level...].

(3) The Security Settings – Internet Zone screen is displayed.

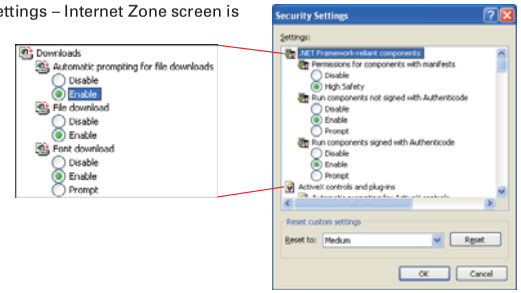

From the list of setting items, find [Downloads], and click [Enable] on the [File download] and [Automatic prompting for file downloads] items.

(4) After you change the settings and click [OK], the question "Are you sure you want to change the settings for this zone?" is displayed. Click the [Yes] button to change the settings. When these settings are changed, [Security level for this zone] in screen (2) changes to [Custom]. Click [OK] to close the Internet Options screen.

5. Supplementary Information

- This Web Software must be installed on the personal computer running the CZ-CSWKC Basic Software. Refer also to the Supplementary Information in the CZ-CSWKC Basic Software operation manual.

- When connecting P-AIMS through the Internet, take adequate security measures such as installing firewall or antivirus software. To set up the firewall or antivirus software, refer to respective manuals.

- The Administrator user ID and password are provided as default. Change the user ID and password for security reasons. Be sure not to let a third party become aware of the new user ID and password.

- Please note that we will not provide compensation in the following circumstances:
  Any fault caused by a third party who became aware of the user ID and password.
  Any fault caused by sharing a PC between P-AIMS and another application.

- Limitations on changing settings
  Some types of air conditioners are limited in the settings which they support. For example, cooling-only air conditioners cannot be set to heating. Floor-type models typically support only high fan speeds. Ceiling mounted models do not have flaps, and therefore cannot change the fan direction.
  You should be aware of the limitations of the air conditioner models in your system.
  For more information, contact your dealer or service provider.

- After the settings of an indoor unit are changed from the P-AIMS System, the display may revert temporarily to the former settings. This is more likely to occur with all-unit operations. The cause is communications delay, not any malfunction in the system. If you wait a few minutes, the display will show the correct information.

- Errors occurred while operating during a thunder storm or because of electromagnetic interference.
  Power the P-AIMS System off and then on again.
  As a rule, the system should be powered off only in cases such as the above.
  Correct management of air conditioning is not possible when the system is powered off.

6. License Certification

Before using the Web Software, first perform a work procedure called "license certification."

To perform license certification, make an inquiry by sending the inquiry key to the inquiry e-mail address below. You will be registered as a user and issued a release key, and then receive a reply.

<Contact Information>
Product ID Issuance Desk,

E-mail address: cmc_productid_desk@gg.jp.panasonic.com

When you make an inquiry, send the following information together with the inquiry in order to be registered as a user and issued a release key.
(1) Product name
(2) Company name/contact person
(3) Phone number
(4) E-mail address
(5) Inquiry key

* If you do not input a release key, you will no longer be able to use the system after 30 days elapses. Obtain a release key and perform license certification as soon as possible.
* Make an inquiry as soon as possible because it may sometimes take several days to be issued a release key.

License Certification Procedure

The procedure from after the P-AIMS system is installed up until the end of license certification is described below.

(1) Check the inquiry key from the License Certification screen.

(2) Send the inquiry key to the Product ID Issuance Desk (cmc_productid_desk@gg.jp.panasonic.com).
Also notify us of the product name, company name/contact person, phone number, and e-mail address.

(3) A release key is issued.
You are registered as a user and a release key is issued. A reply is sent to the registered mail address.

(4) Input the release key from the License Certification screen.

(5) The license certification procedure is finished.

Performing License Certification

1. A License Certification screen such as one shown below appears when you start a P-AIMS system for which license certification is not completed.

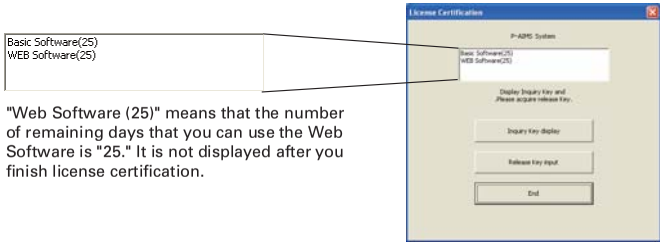

"Web Software (25)" means that the number of remaining days that you can use the Web Software is "25." It is not displayed after you finish license certification.

> * After you start a P-AIMS system for which license certification is not finished, the License Certification screen will appear at 9:00 a.m. and 3:00 p.m. This screen is not displayed after you finish license certification.
> If you install optional software, the License Certification screen will appear until license certification is finished for all of the software.

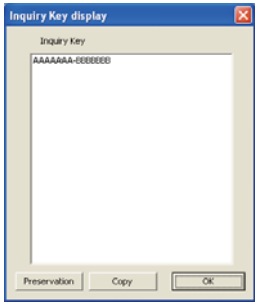

2. If you click the Inquiry Key display button in the License Certification screen, the Inquiry Key display screen appears, and the inquiry key is displayed in the screen.
Send the key displayed in this screen to the Product ID Issuance Desk (cmc_productid_desk@gg.jp.panasonic.com) by e-mail.
At the same time, also notify us of the following items.
   (1) Product name (required)
   (2) Company name/contact person
   (3) Phone number
   (4) E-mail address (required)
You will be registered as a user and issued a release key.

Preservation :Clicking this button saves the inquiry key as a text file. Follow the instructions on the screen to save the text file. Enter the product name, company name/contact person, phone number, and e-mail address in this saved text file, and send the text file to the Product ID Issuance Desk by e-mail.

Copy :Clicking this button copies the inquiry key to the Windows clipboard. Paste the inquiry key into your mail.

OK :Clicking this button closes the Inquiry Key display screen.

3. When you receive the release key, restart the P-AIMS system.

   If license certification is not finished for the P-AIMS system, the License Certification screen on the right appears before the P-AIMS system restarts.
   Click the Release Key input button to display the Release Key input screen, and enter the release key.

> * If you install multiple P-AIMS system software, the same number of license certifications is required. In such a case, the number of release keys sent will be the same as the number of inquiry keys.
> Enter all of the received release keys sequentially, and perform license certification. (There is no set order for entering release keys, so they can be entered in any order.)

License certification is finished once all of the release keys have been entered.

Click the End button. The License Certification screen closes, and the P-AIMS system starts.

> * The P-AIMS system will start even if you click the End button without entering the release key. You can use the system as is until license certification is finished. (The system can be used for a period of 30 days.)

7. Preparation

7-1. Firewall setting

Set up the firewall before installing the Web Software.

1. Click start at the bottom-left corner of the screen to display the menu.

   Click “Control Panel”.

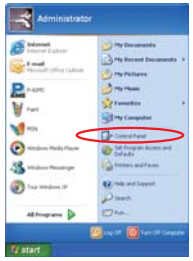

2. The Control Panel window opens.

   If the window appears as shown in the right, click “Switch to Classic View” to change the view. (Omit this step if the window already appears as shown in step 3.)

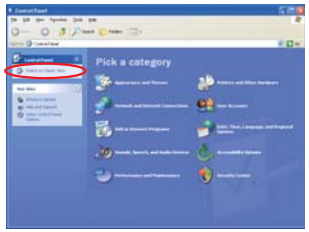

3. Windows classic style Control Panel window appears.
   Double click “Windows Firewall”.

4. The Windows Firewall screen appears.
   Click the Exceptions tab.

5. Add the port number to exceptions.
   Click Add Port...

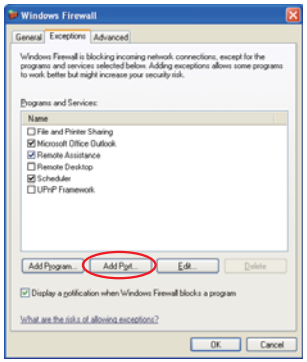

6. The Edit a Port screen appears.

   Enter the following:
   Name :”p-aims”
   Port number :“808”

   Click OK.

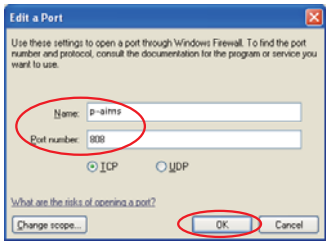

7. Check the list under “Name” in the Exceptions tab.

   Has “p-aims” been added?
   Is “File and Printer Sharing” checked?
   If both are checked, click OK.

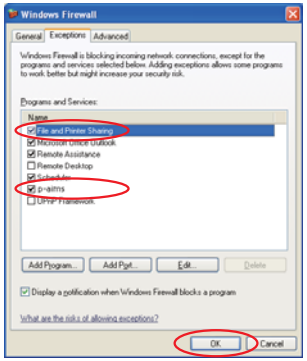

7-2. Installation

During installation, a screen prompting restart of the operating system may appear. In that case, restart the operating system.

1. First, stop the P-AIMS system.
   Insert the Web Software CZ-CSWWC2 CD of the air-conditioning integrated system (P-AIMS system) you purchased into the CD-ROM drive. The program on the CD-ROM starts automatically and makes preparations for installation. If installation does not start, double-click Setup.exe of the CD-ROM drive to start it.
   Enter the Product ID in the Input Product ID screen that appears.
   For the Product ID, see the Product ID Issuance Certificate supplied with the software.

2. The InstallShield Wizard prepares to install the P-AIMS system.

   * Keep the Product ID Issuance Certificate in a safe place. The Product ID is required to install the air-conditioning integrated system. The Product ID Issuance Certificate will not be reissued.

3. After a short while, the "The InstallShield(R) Wizard will install P-AIMS Web Option on your computer. To continue, click Next." message appears. Click the Next > button.

4. Next, the License Agreement screen appears. Carefully read the license agreement, and click "I accept the terms in the license agreement" if you agree to the terms of the license agreement.
   The Next > button becomes active.
   Click the Next > button. (The software cannot be installed if you do not agree to the terms of the license agreement.)

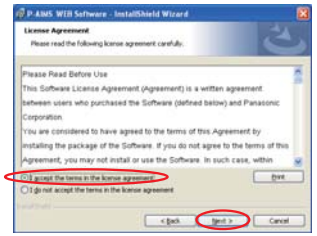

5. The "The wizard is ready to begin installation. Click Install to begin the installation." message appears. Click the Install button.

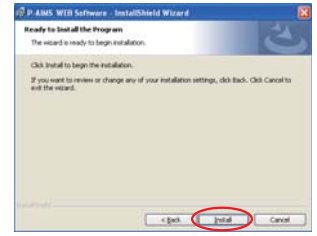

6. The installation of the P-AIMS system begins.

   Please wait a while.

7. The Security Warning screen appears. Click Run.

   This screen may not appear, depending on the computer setting. In that case, proceed directly to the next step.

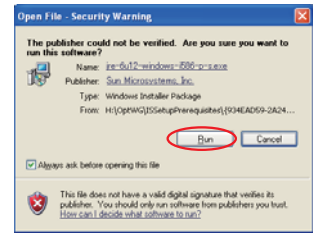

8. When the P-AIMS Web Software setup is finished, the Apache Tomcat Setup screen appears.
   Click [Next >].

9. The setup screen inquires if you agree with the license agreement. Click
   [I Agree].

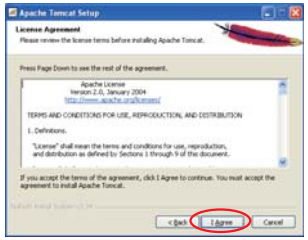

10. Change the Apache Tomcat component settings.
    Double click "Tomcat" to display functions of Tomcat. Click "Service" to add a checkmark.
    Click [Next >].

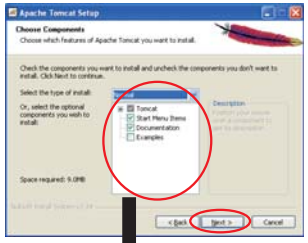

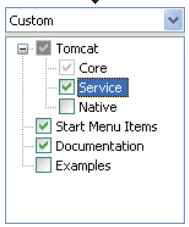

11. Use the default destination folder for Apache Tomcat installation.
    Click [Next >].
    Note: Do not change the default destination folder. If it is changed, the Web Software will not operate properly.

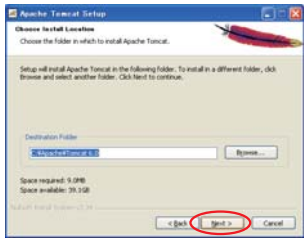

12. Also do not change the configuration setting.
    Click [Next >].

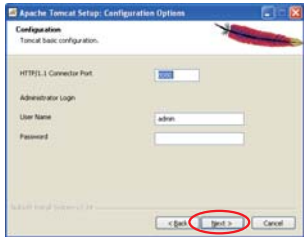

13. Use the default setting for Java installation destination.
    Click [Install].

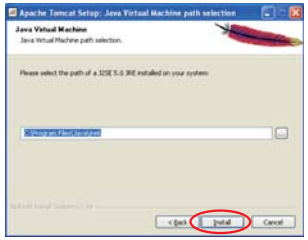

14. The installation of Apache Tomcat begins. Please wait a while.

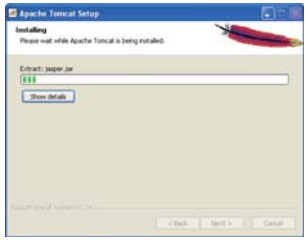

15.When the Apache Tomcat installation is finished, the following checkboxes are displayed.

☐Run Apache Tomcat
☐Show ReadMe

Uncheck both of the checkboxes and click Finish.

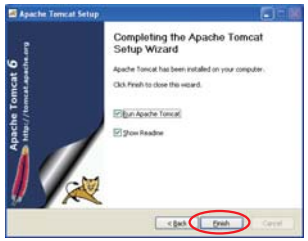

16.The Security Warning screen appears.
Click Run.

This screen may not appear depending on the computer setting. In that case, proceed directly to the next step.

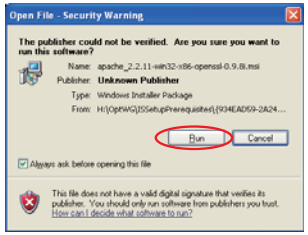

17.Apache HTTP Server is automatically set.

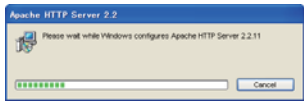

18.Windows Firewall inquires if you want to block Apache HTTP Server.
Click Unblock.
This screen may not appear depending on the computer setting. In that case, proceed directly to the next step.

19.The Web Software installation is complete.
Click Finish.

20.When the Web Software installation is complete, a screen prompts you to restart the system.
Remove the Web Software CD and click Yes.

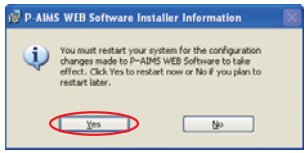

* Caution
If you have not finished the firewall setting described in 7-1, perform the setting first and then restart the system.

7-3. Display after restart

When the system restarts, P-AIMS also starts. The Web functions are enabled and the Web menu item can be selected.

7-4. Settings

Once installation is complete, settings are required for "Web basic settings", "Web user registration", etc. Refer to the explanations in the corresponding sections for information on these settings.

For information on basic operations of the P-AIMS system, refer to the P-AIMS Basic Software operation manual.

7-5. WEB Software Pre-check Sheet

The P-AIMS system Web Software (P-AIMS Web Software) requires connection to an intranet or LAN. We need to check the user's personal computer (network) environment before installing the software.
Check the appropriate checkboxes and enter necessary information in the pre-check sheet below and send it to the Panasonic engineer in charge of test operation.

■ Requests
Do not connect to the network before the following settings are complete.
Use a Category 5(*) or higher LAN cable.

* One of the electric characteristic grades of communication cables standardized by the US Telecommunications Industry Association (TIA) and the US Electronic Industries Association (EIA). The Category 5(*) LAN cable is capable of data transmission up to 100MHz bandwidth.)

Take adequate security measures such as setting a firewall or installing antivirus software to protect the network from unauthorized external access.

The following environment is required to connect to the P-AIMS WEB Software from the Web browser on the customer's personal computer to operate the air conditioners. Check the applicable checkboxes.

a ☐ Supported browser : Internet Explorer 6.0 or later
b ☐ Screen resolution : 1024 × 768 or more is recommended
c ☐ Communication protocol : IPV4 (IPV6 is not supported)

Proceed if all checkboxes are checked.

Network Connection Environment Check

(1) Does the P-AIMS Web Software connect to the personal computer for Web operation on a one-to-one basis?

"One to one"

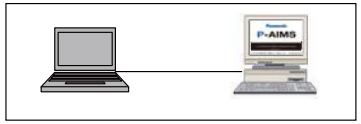

d ☐Yes →No information required in advance.
The Panasonic engineer in charge of test operation will make the settings during test operation.
e ☐No →Go to (2).

(2) Is the network that you would like to connect to an existing network?
f ☐Yes →Go to (3).
g ☐No →Go to (6).

(3) Is a DHCP server used?
h ☐Yes →Go to (4).
i ☐No →Go to (5).

Using the DHCP server

[Using the DHCP server]

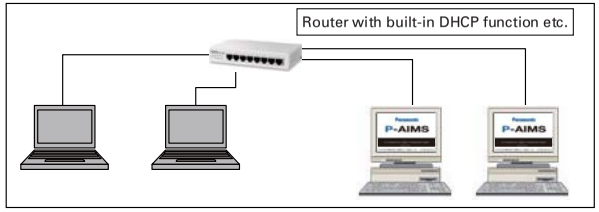

***Enter the device names that are set for the P-AIMS Web Software.**

(4) Device name for the P-AIMS Web Software
j [ ]

(5) If connecting to more than one P-AIMS system
k [ ]
[ ]
→Go to (7).

(6) Using a fixed IP address

[Using a fixed IP address]

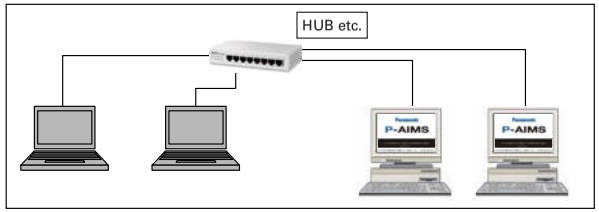

***Enter the IP address that is set for the computer running the P-AIMS Web Software.**

IP address of the computer running the P-AIMS Web Software
l [ ]
If connecting to more than one computer running P-AIMS Web Software
m [ ]
[ ]
Subnet mask for the computer running P-AIMS Web Software
n [ ]
[ ]
Default gateway for the computer running P-AIMS Web Software
o [ ]
→Go to (7).

Is the network construction complete? (Responsibility of the user.)
p ☐Yes →Go to (3).
q ☐No →The user is responsible for the network construction. When the network construction is complete, go to (3).

(7) Would you like to use the function to send an email when an alarm occurs?
r ☐Yes →Go to (3).
s ☐No →That is all. We appreciate your cooperation.

Email Delivery Function Check

The P-AIMS Web Software incorporates a function to send an email when an alarm occurs. This function requires the following environment.
t ☐Mail transmission protocol:SMTP (Exchange Server is not supported)
If OK, go to (8).

(8) Do you have a contract for a mail server connection?
u ☐Yes →Complete the following.
Email delivery server address (SMTP)
v [ ]
Sender account name
w [ ]
Recipient account name 1
x [ ]
Recipient account name 2
[ ]
Recipient account name 3
[ ]

Thank you for your cooperation.

Glossary

- Intranet -
  In-house network constructed using standard Internet technologies such as TCP/IP communication protocol.

- LAN -
  LAN (Local Area Network) is an in-house communications network. It connects computers and devices such as printers in the same building using twisted pair cables, coaxial cables, or optic-fiber cables for data transmission.

- Internet -
  The Internet is a network of interconnecting networks that use Internet protocols.

- WAN -
  WAN is the abbreviation of Wide Area Network. This word is used as a contrast with LAN, which is constructed, managed, and operated by the user.

- Java Applet -
  Java Applet is a Java application loaded into a Web browser through the network and then implemented.

- Communication protocol -
  Set of protocols when computers communicate through a network. It is sometimes called the communication procedure or networking protocol.

- DHCP -
  A protocol that automatically assigns necessary information such as an IP address to a computer which temporarily connects to the Internet. Information such as Gateway server IP addresses, DNS server IP addresses, and IP address ranges that can be assigned to a subnet mask and client is set in the DHCP server. The DHCP server provides this information to a computer accessing the Internet via a dial-up connection or some other method. When the client ends communication, it automatically recovers the address and assigns it to another computer. DHCP allows users who are not familiar with network settings to connect to the Internet easily. It also allows the network administrator to easily manage many clients.

- Hub -
  Hub (networking device) - A device for connecting multiple network devices with cables when using Ethernet (10BASE-T, 100BASE-TX, etc.), USB, or IEEE 1394.

- Router -
  In the computer network a router is a communication device that relays and connects different networks. It has become widespread since TCP/IP was first used as a communication protocol.

- IP address -
  The IP address is a number for identifying the device that sends and receives packets. It is defined by the IP. It was originally used for the Internet in a limited sense, but is now also used for LAN as the Internet has become more widespread.

- Subnet mask -
  A subnet mask is a number for identifying the network address and host address in the IP address.

- SMTP Simple Mail Transfer Protocol -
  A protocol to send email. The protocol specification is defined by RFC821.

- Exchange Server -
  A mail server released by Microsoft.

16. Intelligent Management System

◉ Account -
In the computer field, an account is the right to log into a specified domain (network or computer.)
A user indicates the user of a computer system.
An account assigned to a user is also called a "user account."
There are accounts for logging into a network and accounts for sending and receiving email.
A password is always associated with an account (ID). A user can log into the network or computer that he or she is authorized for by entering the account ID and password.
In some cases, this right (ID) and password together are referred to as an account.

User memo space

If you fill this out at the time of purchase, it is convenient when ordering repairs etc.

Serial No.	
Date of installation	
Dealer	Telephone No. ( )

Operation Manual

Air Conditioning
Intelligent Management System

CZ-CSWGC2

Layout Display Software

P-AIMS

Thank you for purchasing our monitoring and control system.
Before using the system, be sure to read this manual carefully. After reading it, store it, in a convenient location for easy reference.

Contents

Precautions on Using This Product i
1. Introduction 1
2. Startup and exit 2
3. Quick reference 3
4. Using the system 4
5. Supplementary Information 32
6. License Certification 34
7. Preparation 37
[Reference] Parts list 40

Operation Manual

Air Conditioning
Intelligent Management System

CZ-CSWGC2
Layout Display Software

Contents

Precautions on Using This Product i

1. Introduction 1

2. Startup and exit 2
2-1. Startup 2
2-2. Exit 2

3. Quick reference 3

4. Using the system 4
4-1. Layout Display 4
4-1-1. Screen selection method 5
4-1-1-1. Layout screen selection method 6
4-1-1-2. How to display layout screen one at a time 6
4-1-1-3. How to display multiple layout screens 6
4-1-1-4. Operation method when multiple layout screens are displayed 7
4-1-2. Start/stop control method 8
4-1-2-1. How to select an I/D unit (digital point) 8
4-1-2-2. Start/stop control method (indoor unit) 8
4-1-2-3. Start/stop control method (digital point) 9
4-1-2-4. Start/stop control method (analog point) 9
4-1-3. Layout operation method 10
4-1-3-1. How to confirm unit names 10
4-1-3-2. How to confirm analog data such as temperature 10
4-1-3-3. How to display popup menu 11
4-1-3-4. Popup menu "Unit details" 11
4-1-3-4-1. Indoor unit 11
4-1-3-4-2. Accumulated value 12
4-1-3-4-3. Digital point 12
4-1-3-4-4. Analog point 12
4-1-3-5. Popup menu "Check schedule" 13
4-1-3-6. Popup menu "Error log" 13
4-1-3-7. Popup menu "Maint. ON" 14
4-1-3-8. Popup menu "Name registration" 14
4-1-3-9. Popup menu "Meter value settings" 14
4-1-3-10. Popup menu "High/low-limit alarm settings" 14
4-1-3-11. Popup menu "Output value settings" 15
4-1-3-12. How to check the configuration of inddor units connected to an outdoor unit 15
4-2. Layout Master 16
4-2-1. Registering layout diagrams 17
4-2-1-1. How to select registered layout diagrams 18
4-2-1-2. How to select new layout diagrams 19
4-2-1-3. How to allocate parts to layout diagrams 21
4-2-1-4. The Parts List screen 21
4-2-1-5. The Parts screen 22
4-2-1-6. How to allocate parts to layout diagrams 23
4-2-1-7. How to move parts within layout diagrams 24
4-2-1-8. How to delete parts from layout diagrams 24
4-2-1-9. How to delete layout diagrams 25
4-3 Settings 26
4-4. Layout backup 27
4-4-1. Starting layout information backup 27
4-4-2. Deleting layout information backups 28
4-4-3. Changing the save location for layout information backups 28
4-5. Restoring layouts 29
4-5-1. Starting layout restoration 30
4-5-1-1. Starting layout restoration 30
4-5-1-2. Canceling layout restoration 31
4-5-1-3. Re-specifying the layout restoration file 31

5. Supplementary Information 32

6. License Certification 34

7. Preparation 37
7-1. Installation 37
7-2. Display after restart 39
7-3 Settings 39

[Reference] Parts list 40

■Precautions on Using This Product

★IMPORTANT★

- Before you can use the P-AIMS system, you need to first perform a work procedure called "license certification."
  Please perform the license certification referring to "6.License certification".
- Duplication of all or part of this software and documentation without the express consent of the holder of the rights to the above, and transfer of the software to another party, are prohibited by law.
- This software and manual are not to be reproduced, in whole or in part, without permission.
- In principle, each set of this software is purchased for use on a single computer.
- Please note that we bear no responsibility for any effects resulting from the use of this software and manual.
  Panasonic will not be liable for any claim based on errors in calculations of distribution ratios and utility usage caused by faults in this equipment or software.
- The specifications of this software, and the content of this manual, are subject to change without notice, for the sake of improvement.
- This software is used to calculate distribution ratios and charges according to the load ratios estimated for each indoor unit.
  It is not based on the Measurement Act, so it cannot be used for public transactions and similar purposes.
- The content of this manual is limited to explanation of how to use this software.
  It does not cover the usage methods for the operated machinery and optional features, or for the OS etc., so refer also to the relevant manuals for those elements.
- The screen image examples presented in this manual are intended to illustrate the explanation of layouts, and do not represent actual operating conditions. The tenant names displayed are also fictional.
- Displays and operations may differ from the examples in this manual, depending on versions of Excel and the OS used.
- Refer to "Read Before Using This System" for the warranty terms for this software.
- Panasonic will not be liable for any violation of the rights of any third party stemming from use of information in this manual, or for violation of other rights.
- Microsoft, Windows XP and Microsoft Excel are trademarks of Microsoft Corporation in the United States and other countries.
  Other product names are trademarks or registered trademarks of the corresponding companies.
  Other products are copyrights of the corresponding companies.

1. Introduction

This layout display software (referred to below as "the system") is intended to present the allocation of air conditioners and other devices in Air Conditioning Intelligent Management System (referred to below as "the P-AIMS system") in layout diagrams and operate them.

This system is installed on the personal computer which runs the P-AIMS System (basic software).

The system displays the layout of the building managed by the P-AIMS system and displays the operation status of the indoor units installed there,
set temperatures and room temperatures. It can also control operations such as run, stop and mode changes.

2. Startup and exit

2-1. Startup

1. Double click on the P-AIMS shortcut on the desktop.

The window below appears. The system starts up and the Status/Operation screen is displayed.

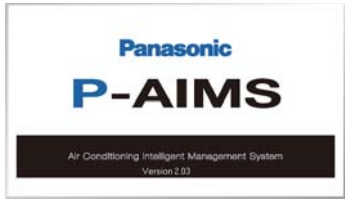

2-2. Exit

1. From the Menu bar, select Maintenance - Exit.

2. The Password authority 2 screen is displayed. Input the password.

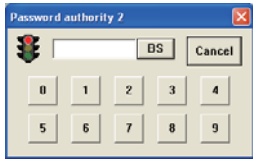

3. The System Exit screen is displayed. Click on the Yes button.

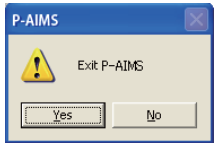

3. Quick reference

Menu List

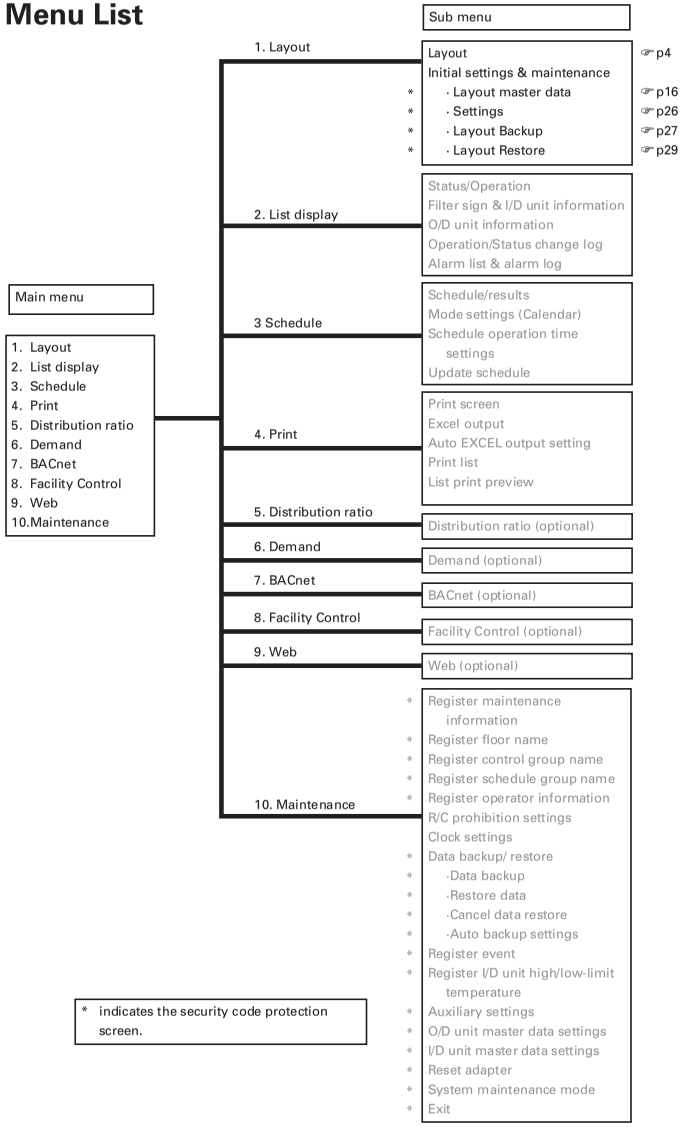

4. Using the system

4-1. Layout Display

[Procedure]
Select Layout - Layout from the menu bar.

This displays layout diagrams for monitoring the status of indoor units. The operation, mode, set temperatures, room temperatures, fan speeds, flaps, central control, alarms and other items can be monitored. Indoor units can also be controlled to start and stop.

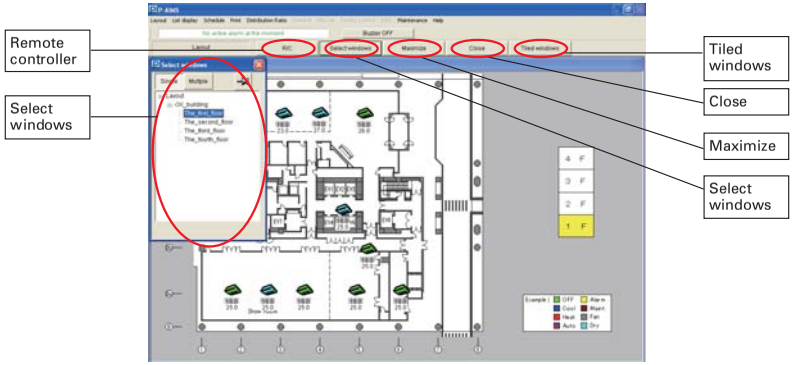

R/C :Displays the remote control units that control the operations of indoor units

Select windows :Displays the Select windows screen for selecting layout screens.

Maximize :Maximizes the layout screen.

Close :Closes and deletes the displayed layout diagram.

Tiled windows :Arranges the displayed layout diagram.

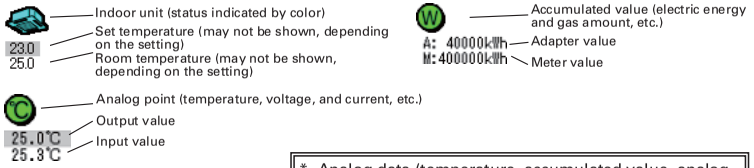

* Analog data (temperature, accumulated value, analog point, etc.) is not displayed depending on the settings.

* Icons for indoor unit, outdoor unit, Accumulated value, and Analog input/output etc. vary depending on the unit used.
* For the accumulated value operations, optional Distribution ratio software is required. For the analog point operations, optional Facility control software is required. For more information, please contact your dealer or service provider.

4-1-1. Screen selection method

Display the layout screen by selecting it from the Select windows screen.
If no layout diagram has been specified before the Layout operation is used, the Select windows screen is displayed. The Select windows screen can also be displayed by clicking on the Select windows button.

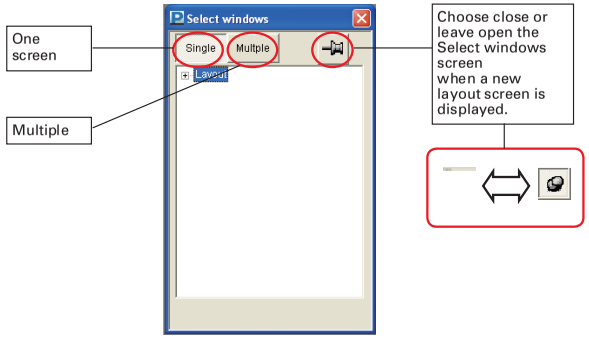

Register : Displays the layout screen as one-screen display. When a screen is selected, the previous screen is closed, and only the newly-selected one is displayed.

: Displays multiple layout screens. Up to four layout screens can be displayed. Screens in excess of the maximum cannot be displayed.

: The Select windows screen closes when a new layout screen is displayed. This is convenient for displaying one screen at a time.

: The Select windows screen remains open even when a new layout screen is displayed. This is convenient for displaying multiple layout screens, or for checking them one by one.

4-1-1-1. Layout screen selection method

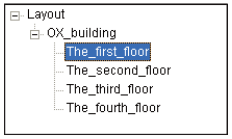

① Double click on Layout.
Alternatively, click on ⊞.
'OX_building', the group name, is displayed.
② Double click on 'OX_building'.
Alternatively, click on the ⊞.
1F to 4F are displayed for the name.
③ Click on 'The_first_floor'.
Display the layout for 'OX_building 1F'.

* After you have displayed 'Layout' and 'OX_building' once, the next time you will only have to click on '2F' to display the layout for 'The_second_floor'.

4-1-1-2. How to display layout screen one at a time

Click on the Register button so that the Register button remains pressed. Every time a layout screen is selected on Select windows screen, the previous layout screen closes and the newly-selected one is displayed.

When the button is displayed, the Select windows screen closes when a new layout screen is displayed.

When the button is displayed, the Select windows screen remains open even when a new layout screen is displayed. More screens can be selected.

Click on the button in the top right of the select windows screen to close it.

4-1-1-3. How to display multiple layout screens

Click on the button so that the button remains pressed. Even when a layout screen is selected on Select windows screen, the previous layout screen stays open and the newly-selected one is displayed. However, once four screens are open, no more can be displayed.

When the button is displayed, the Select windows screen closes when a new layout screen is displayed.

When the button is displayed, the Select windows screen remains open even when a new layout screen is displayed. More screens can be selected.

Click on the button in the top right of the Select windows screen to close it.

4-1-1-4. Operation method when multiple layout screens are displayed

When multiple layout screens are displayed successively, each is displayed in a slightly different position from the one before, as illustrated below.

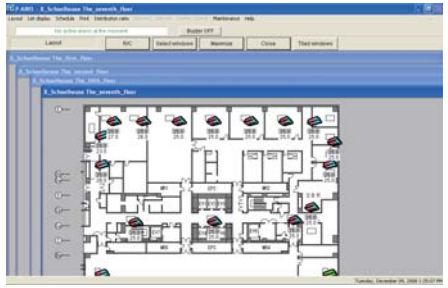

Click on the Maximize button to maximize the layout screen that is focused (the one that has blue title bar) to arrange the layout screens tidily. When one screen is maximized, all the others are closed.

Click on the Close button to close the layout screen that is focused (the one that has blue title bar).

Click on the Tiled windows button to change the display method to suit the number of layout screens on display.

(For two screens)

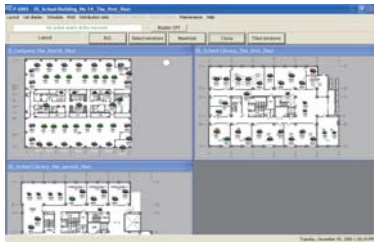

(For three screens)

(For four screens)

4-1-2. Start/stop control method

Indoor units, digital points, and analog points can be controlled to start and stop.

4-1-2-1. How to select an I/D unit (digital point)

To control start/stop, move the mouse cursor to the target indoor unit (digital point) and click it. The clicked indoor unit (digital point) is displayed with a check mark. Click the icon again to clear the check mark. To select multiple indoor units (digital points), drag the mouse over the area to include the target indoor units (digital points) as illustrated in the left side diagram below. Indoor units (digital points) in the dragged area are displayed with check marks. Perform the same operation to clear the check marks.

*This illustration only shows indoor units

* If an indoor unit with check mark is included among multiple indoor units in the dragged area, the check mark for that indoor unit is cleared.
* Digital points can be selected using the same method.
* Indoor units and digital points cannot be selected at the same time.

4-1-2-2. Start/stop control method (indoor unit)

Click the R/C button on the upper part of the screen while the indoor unit is selected to display the following R/C screen. On this R/C screen, the operation, mode, set temperatures, fan speeds, flaps, and central control can be changed. Click the Cancel button to close the R/C screen without transmitting settings.

* When the R/C button is clicked without selecting any indoor units, the R/C screen does not appear.
* When multiple indoor units are selected, the indoor unit operation status is not displayed.

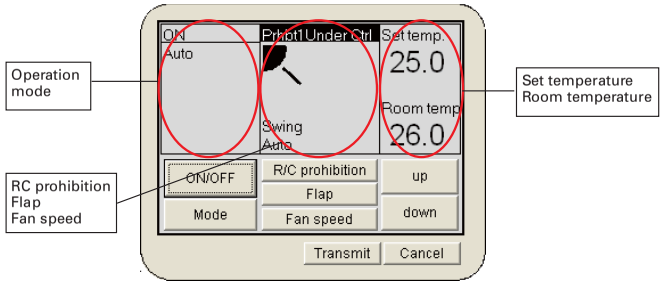

ON/OFF :Switches between "ON" and "OFF" every time it is clicked.

Mode :Switches between "Auto", "Heat", "Cool", "Fan", and "Dry" every time it is clicked.

R/C prohibition :Switches between "RC OK (blank)", "RC Prohibition 1" to "RC Prohibition 7" every time it is clicked.

* RC Prohibitions 1 to 4 are for CZ-CFUNC2.

Flap :Switches between "swing" and "F1" to "F3" every time it is clicked.

Fan speed :Switches between "Auto", "High", "Mid", and "Low" every time it is clicked.

up / down :Changes the room temperature setting.
*The setting temperature range can be changed on the screen displayed by selecting "Maintenance" - "Register I/D unit high/low-limit temperature".

Transmit :Transmits set content to the I/D unit.

4-1-2-3. Start/stop control method (digital point)

Click the R/C button while a digital point is selected to display the ON/OFF screen.
Click the button to close the ON/OFF screen.

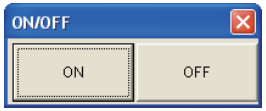

ON :Click this button to transmit the start signal and close the screen.

OFF :Click this button to transmit the stop signal and close the screen.

4-1-2-4. Start/stop control method (analog point)

Use this method to change the output value of the analog output.
Display the popup menu for the analog point as shown in "4-1-3-3. How to display popup menu". Click "Output value settings" in the menu to display the "Output value settings" screen. Change the output value.

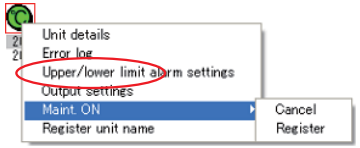

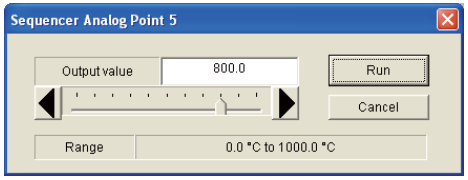

Then click the Run button to set the analog output value and close the screen.
Click the Cancel button to close the screen without changing the value.

4-1-3. Layout operation method

The operations for the indoor unit, outdoor unit, accumulated value, facility control unit (collectively displayed as unit) displayed in the Layout screen are as follows:

4-1-3-1. How to confirm unit names

To check the names of the units, hold the [Ctrl] key down and move the mouse pointer over the desired unit. This causes the address number and the name of the unit displayed when the pointer is changed to

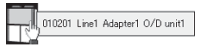

Outdoor unit

Indoor unit

Digital point

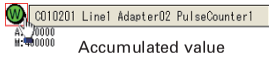

Accumulated value

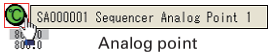

Analog point

* Icons for indoor unit, Accumulated value, Digital point, and Analog point, etc. vary depending on the unit used.

4-1-3-2. How to confirm analog data such as temperature

I/D unit displays temperature, distribution ratio displays accumulated value, and analog point displays analog data such as temperature and current. To hide these analog data, follow the setting procedure described in 4-3. Settings. In this case, to display the analog data temporarily, hold the [Shift] key down and move the mouse pointer over the desired unit, then the analog data is displayed when the pointer is changed to

Indoor unit

Accumulated value

Analog input/output

* Icons for I/D unit, Accumulated value, and Analog point, etc. vary depending on the unit used.

4-1-3-3. How to display popup menu

The mouse pointer is usually presented by but when a unit is selected, the pointer changes to . Right click to display the Popup menu as illustrated below.

Indoor unit

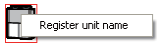

Outdoor unit

Accumulated value

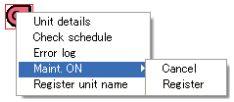

Digital point

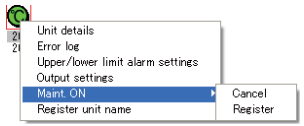

Analog point

* Popup menus for analog point and digital point vary depending on the point status set. The displays in this section are of the most common status.

4-1-3-4. Popup menu "Unit details"

Click on the Unit details in the popup menu to display the "Unit details" screen. The "Unit details" screen vary depending on the indoor unit, accumulated value, digital point, and analog point.
Details of the each unit are as follows.

4-1-3-4-1. Indoor unit

Displays details of the operation status of the I/D unit.

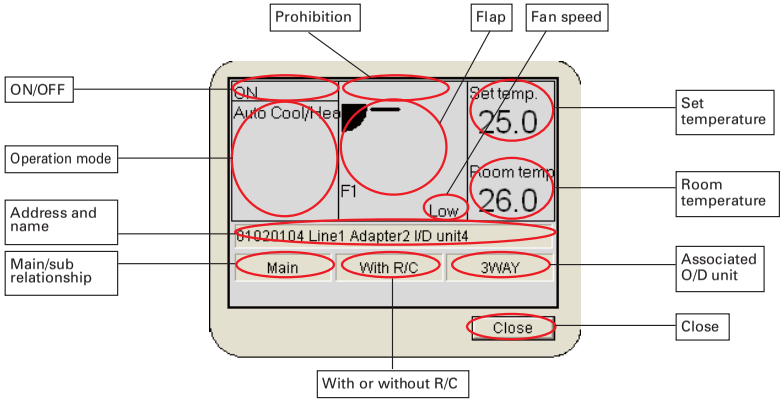

Click on the Close button to close the "Unit details" screen.

4-1-3-4-2. Accumulated value

Displays the detail status of the accumulated value.

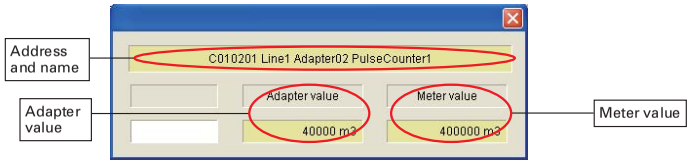

Click on the button to close the "Accumulated value details" screen.

4-1-3-4-3. Digital point

Displays the detail status of the digital point.

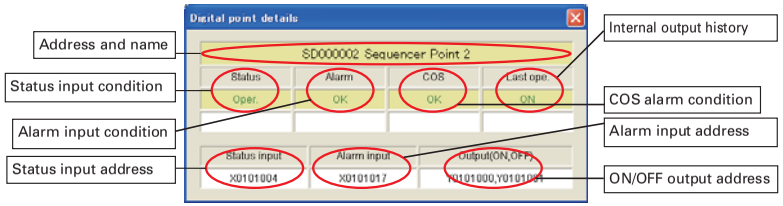

Click on the button to close the "Digital point details" screen.

4-1-3-4-4. Analog point

Displays the detail status of the analog point.

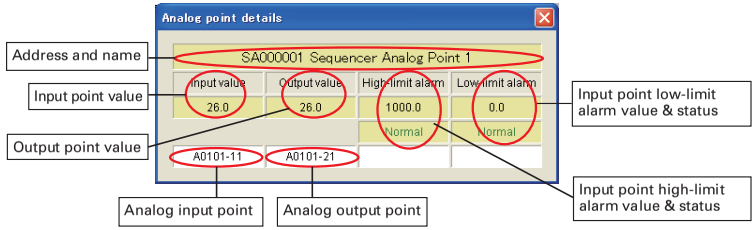

Click on the button to close the "Analog point details" screen.

4-1-3-5. Popup menu "Check schedule"

This menu is for indoor units and digital point (output) units.
It displays the operation schedule for the corresponding unit on the current date and the next two days.
Click on the Check schedule in the popup menu to display the "Schedule" screen.

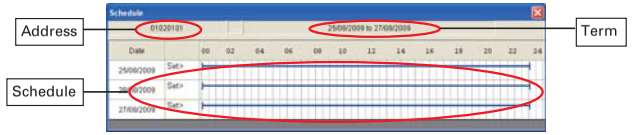

Click on the date on the "Schedule" screen to show the "Detailed schedule" screen for the date concerned, as illustrated on the right.

Click on the button to close the "Schedule" and "Detailed schedule" screens.

4-1-3-6. Popup menu "Error log"

This menu displays the error logs for I/D units, digital point, and analog point. Click on the Error log in the popup menu to show the "Error log" screen.

Key

- Alarm code : Displays alarm codes at the times alarms are issued/restored.
- Alarm date : Displays dates and times when alarms are issued/restored.
- Alarm : Displays occurrence/restoration status of alarms.

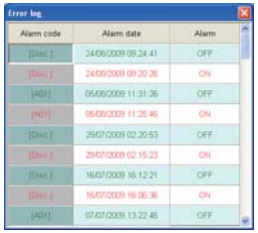

Click on the button to close the "Error log" screen.

4-1-3-7. Popup menu "Maint. ON"

Indoor units, digital point, and analog point issue alarms. Alarms can be temporarily suspended for mechanical work or device malfunctions. When you Register, alarm will not be issued when an error occurs. When you Cancel, the alarm function is restored. Start/stop control and alarm display are disabled for devices registered for maintenance.
Click on the Maint. ON in the popup menu, then click on the Cancel or Register in the sub-menu to specify Cancel or Register.

4-1-3-8. Popup menu "Name registration"

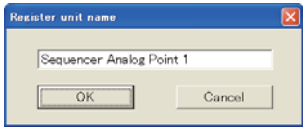

Use this menu to change names for any unit. When the Password screen is displayed by clicking the menu, enter (Password level 2). When the "Name registration" screen is displayed, change the name.
After changing the name, click on the OK button to change the name and close the screen.
Click on the Cancel button to close the screen without changing the name.

4-1-3-9. Popup menu "Meter value settings"

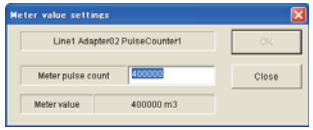

Use this menu to change the meter value in the accumulated value. When the password screen is displayed by clicking the menu, enter (Password level 2).
When the "Meter value settings" screen is displayed, change the Meter pulse count.
After changing, click on the OK button to change the data.
Click on the Cancel button to restore the data before the change.
Click on the Close button to close the "Meter value settings" screen.

4-1-3-10. Popup menu "High/low-limit alarm settings"

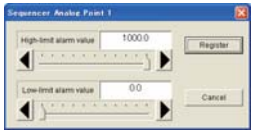

Use this menu to change the high/low-limit alarm value of the analog input. When the password screen is displayed by clicking the menu, enter (Password level 2).
When the "High/low-limit alarm settings" screen is displayed, change the high-limit alarm value or low-limit alarm value.
After changing, click on the Register button to change the data and close the screen.
Click on the Cancel button to close the screen without changing the data.

4-1-3-11. Popup menu "Output value settings"

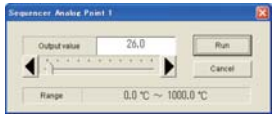

Use this menu to change the output value of the analog output. When the "Output value settings" screen is displayed by clicking the menu, change the Output value.
After changing, click on the Run button to change the analog output value and close the screen.
Click on the Cancel button to close the screen without changing the value.

4-1-3-12. How to check the configuration of inddor units connected to an outdoor unit

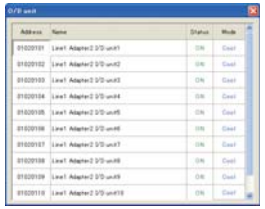

Click on an outdoor unit to display a configuration list of all the connected indoor units. Modes and operation status of connected indoor units can be checked.

Key
- Address : Displays the address numbers of indoor units.
- Name : Displays the names of the indoor units.
- Status : Displays ON, OFF, alarm and maintenance.
- Mode : Displays the operation modes of indoor units.

Click on the ☒ button to close the "O/D unit" screen.

> * For the operations of accumulated value, analog point, or digital point, optional Distribution ratio software or Facility control software is required. For more information, please contact your dealer or service provider.

4-2. Layout Master

[Procedure]
Select Layout - Initial settings & maintenance - Layout master data from the menu bar.
(Password level 1)

Layout master data can be used to allocate indoor unit and outdoor unit parts to layout displays and make additions and deletions.

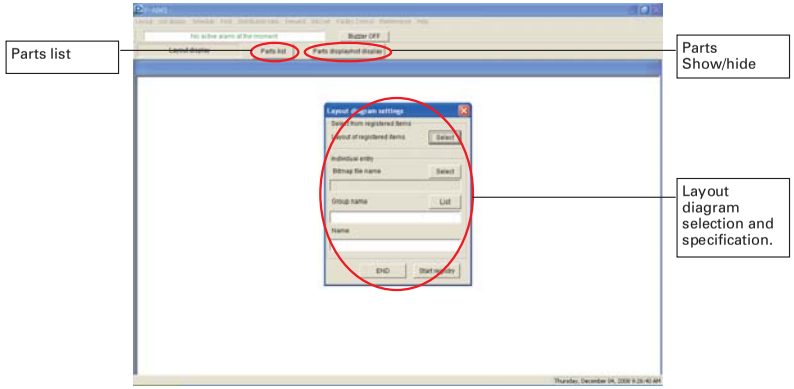

Parts list : Displays a list of all registered parts.

Parts display/not display : Displays or closes the Parts screen every time it is clicked.

* Bitmap files are usable as layout diagrams.
Contact your dealer or service provider about creating, altering or adding bitmap files, and related operations.

4-2-1. Registering layout diagrams

Register the positions of indoor units etc. to previously-created layout displays.

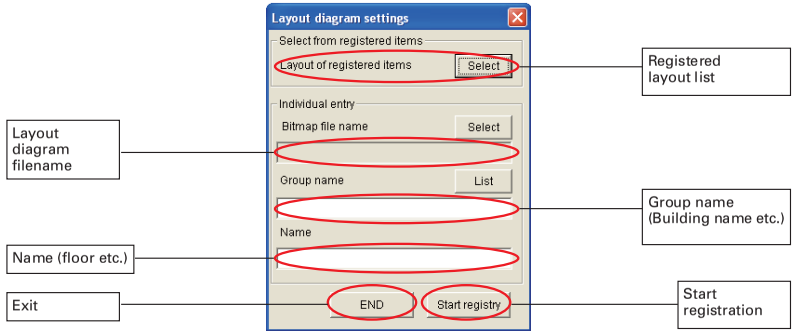

---------Select from registered items ---------

Select : Displays a list of registered layout diagrams.

---------Individual entry--------

Select : Displays the Select bitmap screen for selecting layout diagram filenames.

List : Displays the previously-registered Select group screen.

Previous month : Begins registration of indoor units etc. to the layout display.

Current month : Closes the Layout master data.

4-2-1-1. How to select registered layout diagrams

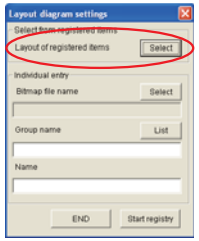

① On the Layout diagram settings screen, click on the Select button inside the Select from registered items frame.
Display the List of registered items screen.

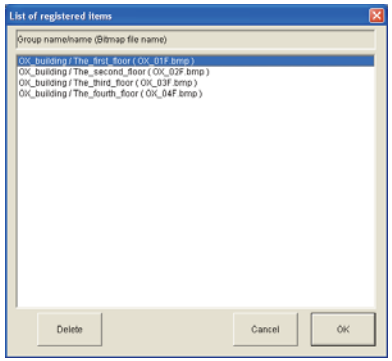

② From the group names and item names on the List of registered items screen, click to select the layout diagram concerned. Selected items are highlighted.
Click or double click on the OK button to close the List of registered items screen and display the bitmap filenames, group names and names for the selected layout diagram on the Layout diagram settings screen.

③ Click on the Start registry button to switch to the registration screens for indoor and outdoor units. Switch to the screen for part allocation.

Click on the END button to close the Layout master data.

4-2-1-2. How to select new layout diagrams

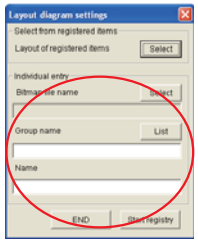

① On the Layout diagram settings screen, click on the Bitmap file name Select button inside the Individual entry frame.
Display the Select bitmap screen.

* Layout diagrams cannot be created on this system. Contact your dealer or service provider about creating, altering or adding layout diagrams (bitmap files), and related operations.

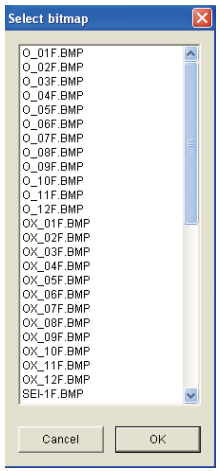

② On the Select bitmap screen, clicking to select the filename for the layout diagram to use highlights the selected bitmap name.
Click or double click on the OK button to close the Select Bitmap screen and display the Bitmap file name on the screen.

Click on the Cancel button to exit without doing anything.

③ The Layout diagram settings screen shows the situation with the filename 'O_01F.BMP' selected.
* If the selected bitmap filename has already been set on the Layout master data, the set name is displayed in the Group name and Name columns.

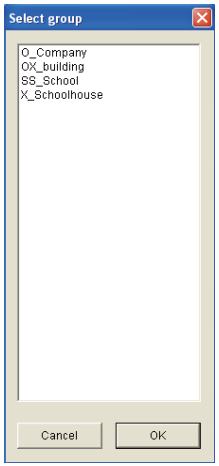

④ Input the group name.
If the group name has already been registered, click on the List button to display the Select group screen. Click to select the name to use, then click or double click on the OK button to exit file selection, leaving the display as illustrated below.

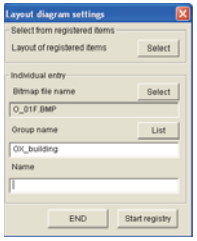

If the group name is not registered, enter it directly into the text box.
It will be registered as a new group name.

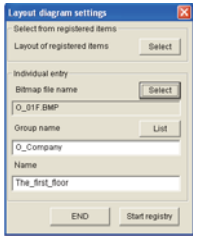

⑤ Input the name.
Use direct input.

⑥ Once name registration is complete, click on the Start registry button to switch to the registration screens for indoor units etc.
Click on the END button to close the Layout master data.

4-2-1-3. How to allocate parts to layout diagrams

Once selection is complete using 4-2-1-1. How to select registered layout diagrams and 4-2-1-2. How to select new layout dagrams, click on the Start registry button to switch the the Part Registration screen.

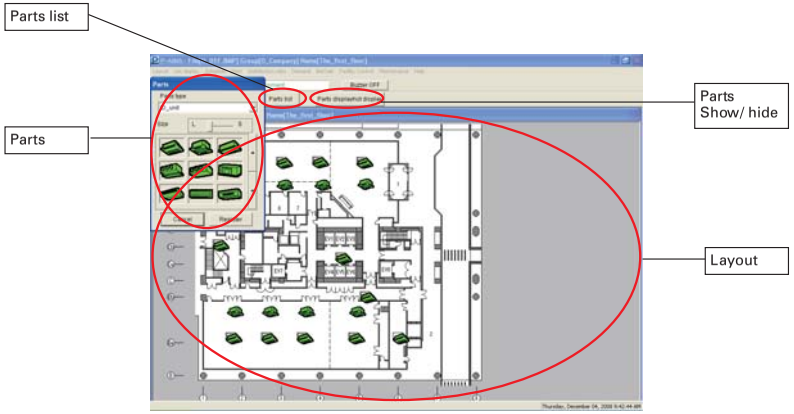

Parts list : Displays a list of all registered parts.

Parts display/not display : Displays or closes the Parts screen every time it is clicked.

4-2-1-4. The Parts List screen

Click on the Parts list button to display a list of the parts registered to the layout diagram.

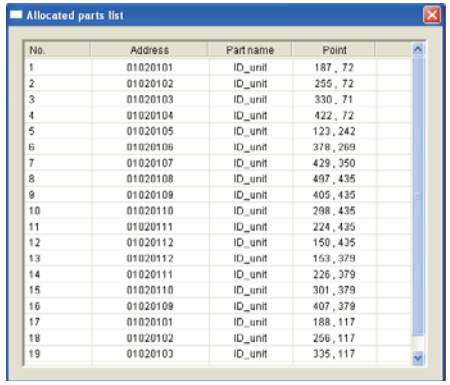

Allocated parts list

No.	Address	Part name	Point
1	01020101	ID_unit	187 , 72
2	01020102	ID_unit	255 , 72
3	01020103	ID_unit	330 , 71
4	01020104	ID_unit	422 , 72
5	01020105	ID_unit	123 , 242
6	01020106	ID_unit	378 , 269
7	01020107	ID_unit	429 , 350
8	01020108	ID_unit	497 , 435
9	01020109	ID_unit	405 , 435
10	01020110	ID_unit	298 , 435
11	01020111	ID_unit	224 , 435
12	01020112	ID_unit	150 , 435
13	01020112	ID_unit	153 , 379
14	01020111	ID_unit	226 , 379
15	01020110	ID_unit	301 , 379
16	01020109	ID_unit	407 , 379
17	01020101	ID_unit	188 , 117
18	01020102	ID_unit	256 , 117
19	01020103	ID_unit	335 , 117

4-2-1-5. The Parts screen

To allocate parts to the layout diagram, use the mouse to select them from the Parts screen and release the mouse button where they are to be placed.

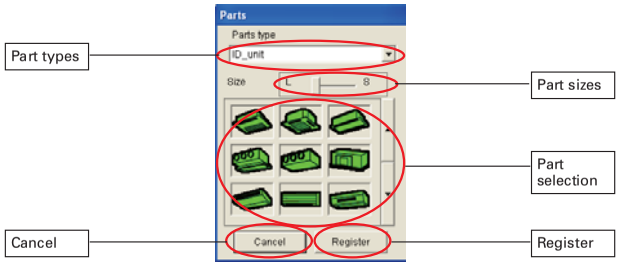

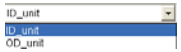

: Use this to select types of parts.
Click on the button to display a pulldown list and select from that list.

: Specify the sizes of parts. Specify if parts are of the same form but different sizes. Parts may not have been registered if they are not required in the layout diagram.

: Select parts. Move the mouse pointer to the necessary part and click on it. Drag the part with the mouse to the where it should be placed. Release the mouse when the part is in the right position.
(Placement is complete, so input the address.)

Register : Register the layout diagram and close the one you were working on.

Cancel : Layout work finishes immediately and the layout diagram closes. (The layout diagram is not registered)

Note: Normally, the Parts screen is displayed, but it may disappear when other systems are used. In that case, click on the Parts display/not display button to show the Parts screen. The Parts display/not display button can also be used to hide the Parts screen. Repeated clicking toggles between showing and hiding the screen.

4-2-1-6. How to allocate parts to layout diagrams

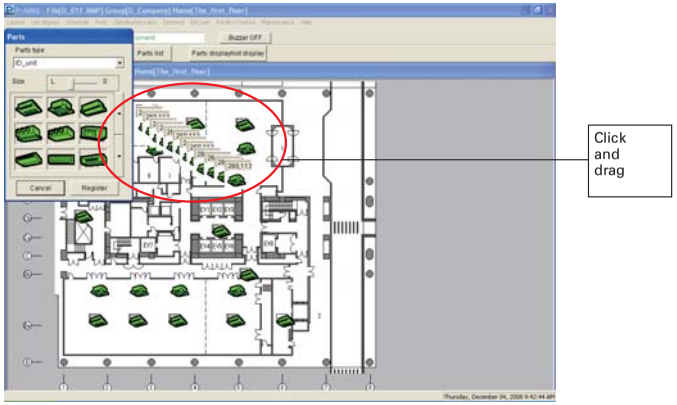

To allocate and place parts, click on the relevant part on the Parts screen to select it, then drag to move the part into position, leaving a part trail as illustrated above.
Release the mouse when the part is in the correct position.
Coordinates are displayed while the part is being dragged with the mouse.

Once the mouse is released, a screen is displayed for entering the address of the part, so enter the address.

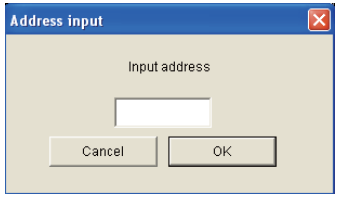

After entering the address, click on the OK button or press the Enter key to finish part placement.

Click on the Cancel button to cancel part placement.

* Addresses have eight digits for indoor units and six digits for outdoor units. Check addresses in advance.

4-2-1-7. How to move parts within layout diagrams

Click on the part to move.
The edge of the selected part is highlighted in red and its position information is displayed, as illustrated on the left.
Either drag the part with the mouse or use the [←] [↑] [↓] [→] keys to move it.
To stop moving the part, click on another part or on the Register button.

4-2-1-8. How to delete parts from layout diagrams

Click on the part to delete.
The edge of the selected part is highlighted in red and its position information is displayed, as illustrated on the left.
Right click to display a query asking whether you want to delete the part.
Specify whether or not to delete it.

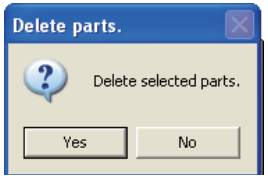

Click on the Yes button to delete.
Click on the No button to avoid deleting.

* When a layout diagram is deleted, it cannot be displayed.
  Make a backup of the layout before proceeding.
* Even if the layout diagram is deleted, the master for indoor units and outdoor units is not altered, so only the layout diagram becomes unavailable.

4-2-1-9. How to delete layout diagrams

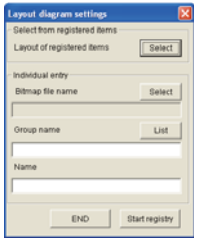

① On the Layout diagram settings screen, click on the Select button inside the Select from registered items frame.
Display the List of registered items screen.

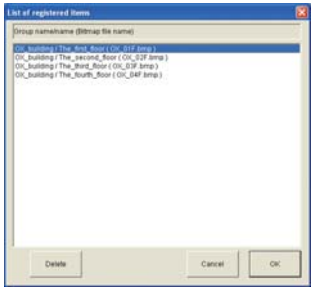

② From "Group name/name (Bitmap file name)" on the List of registered items screen, click to select the layout diagram concerned. Selected items are highlighted.
Click on the Delete button to display the Check deleted layout data screen.

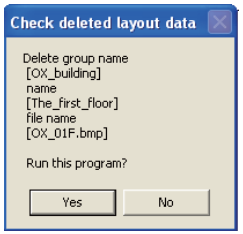

③ On the Check deleted layout data screen, display the group name, name and file name and confirm their deletion.

Yes Click on the button to delete.
No Click on the button to avoid deleting.

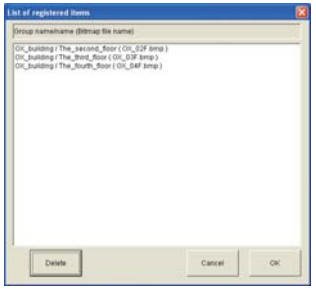

Once you click on the Yes button to delete, the deletion is applied to the Layout diagram settings screen and you can give the next instruction.

Click on the Cancel button to close the Layout diagram settings screen.

4-3 Settings

[Procedure]
Select Layout - Initial settings & maintenance - Settings from the menu bar.
(Password level 1)

Settings can choose whether or not the display should jump to the affected screen when an alarm is issued, and whether or not to display set temperature, room temperature, facility control (analog data), and accumulated (pulse) value.

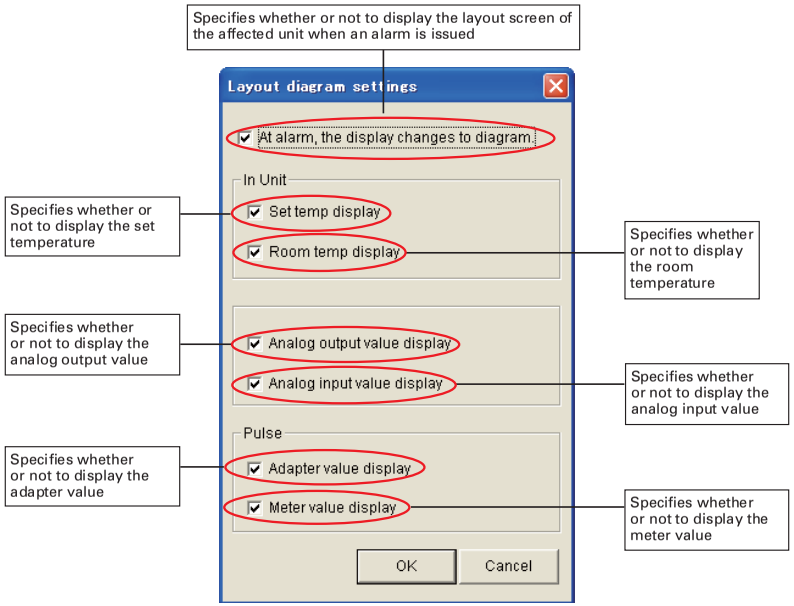

OK : Registers settings and close the "Layout diagram settings" screen.
Cancel : Closes the "Layout diagram settings" screen with no other action.

* For "Facility Control" operations, optional Facility control software is required. If this optional software is not installed, this option cannot be selected.
* For "Accumulation (pulse)" operations, optional Distribution ratio software is required. If this optional software is not installed, this option cannot be selected.
For more information, please contact your dealer or service provider.

4-4. Layout backup

[Procedure]
Select Layout - Initial settings & maintenance - Layout Backup from the menu bar.
(Password level 2)

Make backups of layout information. The initial file name is automatically set to the numbers for "yyyymmdd_hhmm" with "laybak" as the extension.

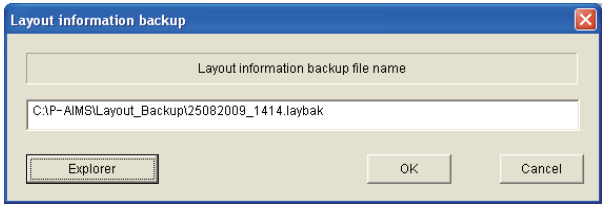

OK :Make backups of layout information.
Cancel :Exit.
Explorer :Use to change the save folder.

4-4-1. Starting layout information backup

Click on the OK button to backup layout information.
Save backup data.

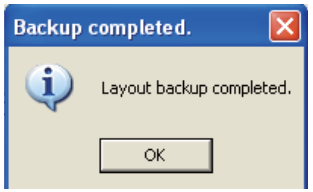

Once the backup is complete, a message such as that on the left is displayed. Click on the OK button. The data backup process ends.

* The message on the right is displayed if the backup fails. Check the available free space on the backup storage drive, etc.
Click on the OK button to go back to Layout information backup.

4-4-2. Deleting layout information backups

Click on the Cancel button to exit without saving the backup data.

4-4-3. Changing the save location for layout information backups

Click on the Explorer button to display the "Backup file name" screen and change the save folder.

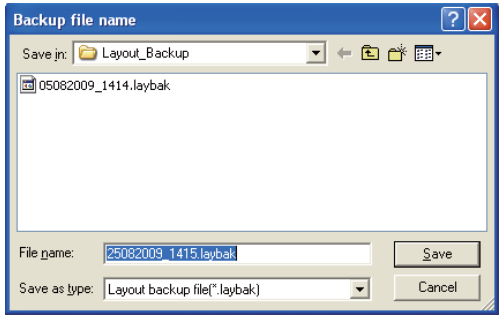

Click on the button beside "Save in" to display a folder list as illustrated below. Select the required folder from the folder list.

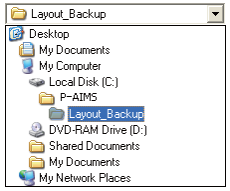

Click on the Save button to apply the selected save destination and return to the Layout information backup screen.

Click on the Cancel button to return to the Layout information backup screen without doing anything.

4-5. Restoring layouts

[Procedure]
Select Layout - Initial settings & maintenance - Layout restore on the menu bar.
(Password level 2)

Use the file created at the Layout Backup stage to return the layout to its state at the time of the backup.

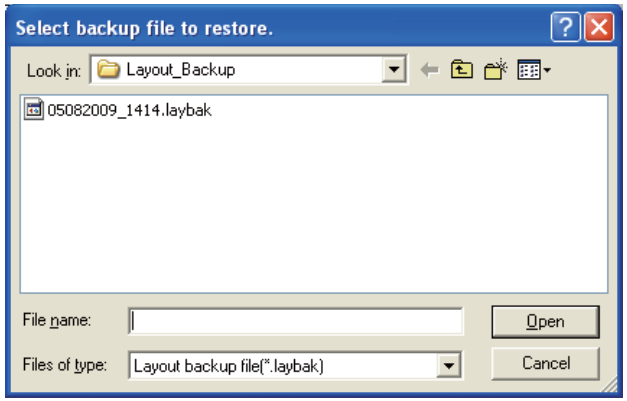

Open : Click on the relevant filename and specify the file name displayed under "File name".

Cancel : Exit without doing anything.

When layouts are restored, current layout information is lost.
If you need to retain current information, use Layout information backup in advance to backup layouts.

4-5-1. Starting layout restoration

On the "Select backup file to restore" screen, click on the file name to restore. The specified file name is displayed in the "File name" space, then click on the [Open] button.
The Restore layout information screen is displayed.

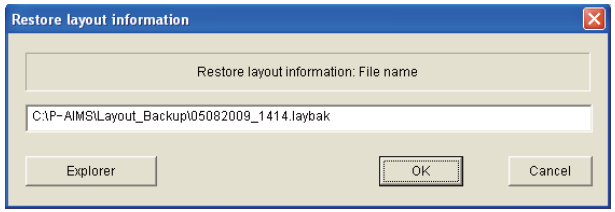

[OK] :Restore the layout information.

[Cancel] :Exit.

[Explorer] :Use this when you need to specify a different backup file.

4-5-1-1. Starting layout restoration

To start layout restoration, click on the [OK] button. A message reading "When restore is complete ..." is displayed.

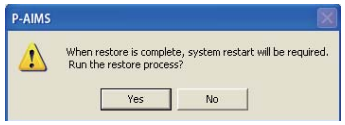

Click on the [No] button to return to the Restore layout information screen.
Click on the [Yes] button to start the restoration process.

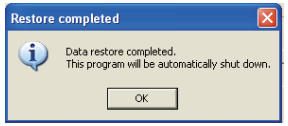

Once the restoration is complete, a message such as that on the left is displayed.
Click on the [OK] button.
The P-AIMS system exits automatically.

Restart the P-AIMS system.

The layout restoration process ends.

4-5-1-2. Canceling layout restoration

Click on the [Cancel] button to exit without restoring layouts.

4-5-1-3. Re-specifying the layout restoration file

Click on the [Explorer] button to re-display the "Select backup file to restore" screen.

5. Supplementary Information

- Layout diagrams
  The layout diagrams used by the P-AIMS System must be drawn up to match the customer's layout, but they cannot be created using this system. For more information about layout creation, contact your dealer or service provider.

- Part icons
  Part icons for use with the P-AIMS System are provided in advance for standard parts as shown in [Reference] Parts list at the end of this manual.
  Part icons other than shown in the parts list must be provided separately if necessary. These part icons cannot be created using this system. For more information about their creation, contact your dealer or service provider.

- Personal Computers
  Use a personal computer exclusively for the P-AIMS System.
  Sharing the PC with any other system could cause problems.

- Data backup
  The PC used with the P-AIMS System could break down, so you are advised to back up data to an external hard drive or other storage. For more information, contact your dealer or service provider.
  Caution: If the drive name of the external hard disk or other backup location changes, backups cannot be done.
  NOTE: When the drive name of an external hard disk drive is changed, it is not possible to back up.

- Power outages
  We recommend use of a UPS device (uninterruptible power supply) to protect the P-AIMS System in the event of a power outage. For more information, contact your dealer or service provider.

- Please note that we will not provide compensation in the following circumstances:
  Any fault caused by a third party becoming aware of a password.
  Any fault caused by sharing a PC between P-AIMS System and another application.

- Limitations on changing settings
  Some types of air conditioners are limited in the settings which they support.
  For example, cooling-only air conditioners cannot be set to heating.
  Floor-type models typically support only high fan speeds.
  Ceiling mounted models do not have flaps, and therefore cannot change the fan direction.
  You should be aware of the limitations of the air conditioner models in your system.
  For more information, contact your dealer or service provider.

- Only alarm codes are displayed in the notification bar and alarm log display.
  The content of an alarm can vary for different models, even if the alarm code is the same.
  Consult the documentation of the various models to determine the content of the alarm.

- After the settings of an indoor unit are changed from the P-AIMS System, the display may revert temporarily to the former settings.
  This is more likely to occur with all-unit operations. The cause is communications delay, not any malfunction in the system. If you wait a few minutes, the display will show the correct information.

- If an electrical storm, radio transmissions or other interference during operation caused a malfunction, turn the terminal power off, then on again.
  As a rule, the system should be powered off only in cases such as the above.
  Correct management of air conditioning is not possible when the system is powered off.

- Setting the current date and time
  The current date and time should be set on a regular basis, since the clock of an ordinary PC can gain or lose up to about two minutes per month.

- Passwords
  Passwords should be recorded and saved in a safe place. They should never be disclosed to third parties.
  If you forget your password, contact your dealer or service provider.

6. License Certification

Before you can use the Layout Display Software, you need to first perform a work procedure called "license certification."

To perform license certification, make an inquiry by sending the inquiry key to the inquiry e-mail address below. You will be registered as a user and issued a release key, and then receive a reply.

<Contact Information>
Product ID Issuance Desk,

E-mail address: cmc_productid_desk@gg.jp.panasonic.com

When you make an inquiry, send the following information together with the inquiry in order to be registered as a user and issued a release key.
(1) Product name
(2) Company name/contact person
(3) Phone number
(4) E-mail address
(5) Inquiry key

* If you do not input a release key, you will no longer be able to use the system after 30 days elapses. Obtain a release key and perform license certification as soon as possible.
* Make an inquiry as soon as possible because it may sometimes take several days to be issued a release key.

License Certification Procedure

The procedure from after the P-AIMS system is installed up until the end of license certification is described below.

(1) Check the inquiry key from the License Certification screen.

(2) Send the inquiry key to the Product ID Issuance Desk (cmc_productid_desk@gg.jp.panasonic.com).
Also notify us of the product name, company name/contact person, phone number, and e-mail address.

(3) A release key is issued.
You are registered as a user and a release key is issued. A reply is sent to the registered mail address.

(4) Input the release key from the License Certification screen.

(5) The license certification procedure is finished.

Performing License Certification

1. A License Certification screen such as the following appears when you start a P-AIMS systems for which license certification is not finished.

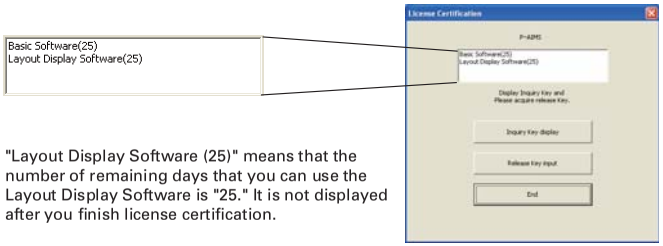

"Layout Display Software (25)" means that the number of remaining days that you can use the Layout Display Software is "25." It is not displayed after you finish license certification.

* After you start a P-AIMS system for which license certification is not finished, the License Certification screen will appear at 9:00 a.m. and 3:00 p.m. This screen is not displayed after you finish license certification.
If you install optional software, the License Certification screen will appear until license certification is finished for all of the software.

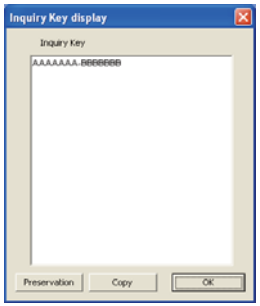

2. If you click the Inquiry Key display button in the License Certification screen, the Inquiry Key display screen appears, and the inquiry key is displayed in the screen.
Send the key displayed in this screen to the Product ID Issuance Desk (cmc_productid_desk@gg.jp.panasonic.com) by e-mail.
At the same time, also notify us of the following items.
(1) Product name (required)
(2) Company name/contact person
(3) Phone number
(4) E-mail address (required)
You will be registered as a user and issued a release key.

Preservation :Clicking this button saves the inquiry key as a text file. Follow the instructions on the screen to save the text file. Enter the product name, company name/contact person, phone number, and e-mail address in this saved text file, and send the text file to the Product ID Issuance Desk by e-mail.

Copy :Clicking this button copies the inquiry key to the Windows clipboard. Paste the inquiry key into your mail.

OK :Clicking this button closes the Inquiry Key display screen.

3. When you receive the release key, restart the P-AIMS system. See "2. Startup and exit" for how to restart the P-AIMS system, and then restart the system.

   If license certification is not finished for the P-AIMS system, the License Certification screen on the right appears before the P-AIMS system restarts.

   Click the [Release Key input] button to display the Release Key input screen, and enter the release key.

* If you install multiple P-AIMS system software, the same number of license certifications is required. In such a case, the number of release keys sent will be the same as the number of inquiry keys.
  Enter all of the received release keys sequentially, and perform license certification. (There is no set order for entering release keys, so they can be entered in any order.)

License certification is finished once all of the release keys have been entered.

Click the [End] button. The License Certification screen closes, and the P-AIMS system starts.

* The P-AIMS system will start even if you click the [End] button without entering the release key. You can use the system as is until license certification is finished. (The system can be used for a period of 30 days.)

7. Preparation

7-1. Installation

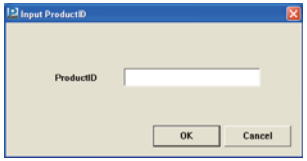

1. First, stop the P-AIMS system.
   Insert the Layout Display Software CZ-CSWGC2 CD of the air-conditioning integrated system (P-AIMS system) you purchased into the CD-ROM drive. The program on the CD-ROM starts automatically and makes preparations for installation. If installation does not start, double-click Setup.exe of the CD-ROM drive to start it.
   Enter the Product ID in the Input Product ID screen that appears.
   For the Product ID, see the Product ID Issuance Certificate supplied with the software.

* Keep the Product ID Issuance Certificate in a safe place. The Product ID is required to install the air-conditioning integrated system. The Product ID Issuance Certificate will not be reissued.

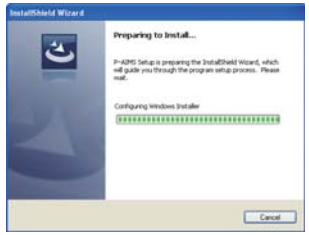

2. The InstallShield Wizard prepares to install the P-AIMS system.

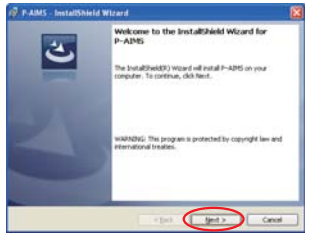

3. After a short while, the "The InstallShield(R) Wizard will install P-AIMS Layout Display Option on your computer. To continue, click Next." message appears. Click the [Next >] button.

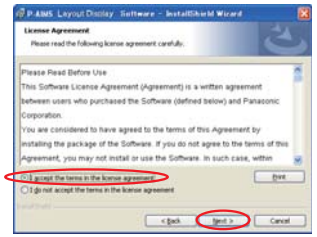

4. Next, the License Agreement screen appears. Carefully read the license agreement, and click "I accept the terms in the license agreement" if you agree to the terms of the license agreement. The [Next >] button becomes active. Click the [Next >] button. (The software cannot be installed if you do not agree to the terms of the license agreement.)

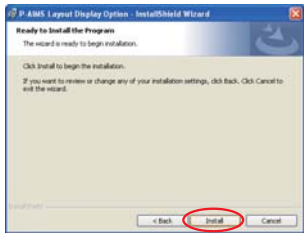

5. The "The wizard is ready to begin installation. Click Install to begin the installation." message appears. Click the [Install] button.

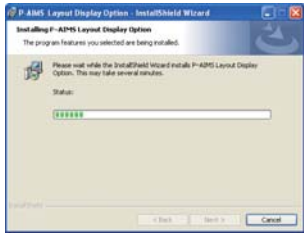

6. The installation of the P-AIMS system begins.

   Please wait a while.

7. When the P-AIMS system setup is finished, the installation complete screen appears.
   Click the [Finish] button to complete the installation.

* When installing the Layout Display software, it is possible to install this system without stopping the P-AIMS system, but the functions of the Layout Display software will not be added. Restart the P-AIMS system.

7-2. Display after restart

After the system restarts, the layout display function is enabled and the menu item Layout is selectable.

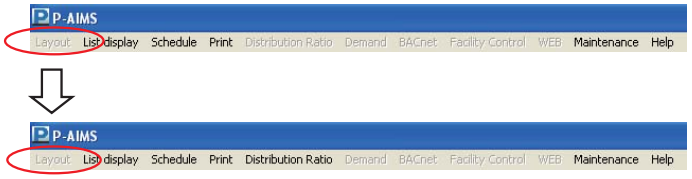

7-3 Settings

Once installation is complete, settings are required for "Layout diagram preparation", "Indoor unit settings", "Outdoor unit settings", etc. Refer to the explanations in the corresponding sections for information on these settings.

* Contact your dealer about "Layout diagram preparation".

[Reference] Parts list

Indoor unit

:Unidirectional ceiling cassette
:4-directional ceiling cassette
:Bidirectional ceiling cassette
:Ceiling built-in cassette
:Built-in, all ducts
:Ceiling-embedded, high static pressure
:Ceiling suspended
:Wall mounted
:For kitchen use
:Perimeter, floor standing
:Floor standing

Outdoor unit

:Single
:Single
:GHP
:GHP
:VRF

Accumulated value (optional Distribution ratio software is required)

:Watt meter
:Gas meter
:Water meter

Digital point (optional Facility control software is required)

:Fan
:Pump
:Illumination

Analog point (optional Facility control software is required)

:Centigrade temperature
:Percentage
:Current
:Voltage
:Fahrenheit temperature

User memo space

If you fill this out at the time of purchase, it is convenient when ordering repairs etc.

Serial No.	
Date of installation	
Dealer	Telephone No. ( )

Operation Manual

Air Conditioning

Intelligent Management System

CZ-CSWBC2

BACnet™ Software

P-AIMS

Thank you for purchasing our monitoring and control system.
Before using the system, be sure to read this manual carefully. After reading it, store it, in a convenient location for easy reference.

Contents

Precautions on Using This Product i
1. Introduction 1
2. Startup and exit 2
3. Quick reference 3
4. Using the system 4
5. Supplementary Information 7
6. License Certification 8
7. Preparation 11

Contents

Precautions on Using This Product i

1. Introduction 1

2. Startup and exit 2
2-1. Startup 2
2-2. Exit 2

3. Quick reference 3

4. Using the system 4
4-1. BACnet 5
4-1-1. Operation time with thermostat on 5
4-1-2. BACnet Maintenance Settings 6
4-1-2-1. Setting Method 6
4-1-2-2. Cancellation Method 7

5. Supplementary Information 7

6. License Certification 8
License Certification Procedure 8
Performing License Certification 9

7. Preparation 11
7-1. Installation 11
7-2. Display at restart 13
7-3 Settings 13

■Precautions on Using This Product

★IMPORTANT★

- Before you can use the BACnet Software for the P-AIMS system, you need to first perform a work procedure called "license certification".
  Please perform the license certification referring to "6.License certification".
- Duplication of all or part of this software and documentation without the express consent of the holder of the rights to the above, and transfer of the software to another party, are prohibited by law.
- In principle, each set of this software is purchased for use on a single computer.
- Panasonic bears no responsibility whatsoever for any damage or loss to the user or any third party that may arise from the use of this software or documentation. Furthermore, Panasonic bears no responsibility whatsoever for any hindrance to BACnet communication caused by faults in this software etc.
- The specifications of this software and contents of this manual are subject to change without notice.
- The content of this manual is limited to the explanation of how to use this software.
  It does not cover usage methods for the operating computer or optional features, or for the OS etc., so refer also to the relevant manuals for those elements.
- Displays and operations may differ from the examples in this manual depending of the OS version used.
- Refer to "Please Read Before Use" for the warranty terms for this software.
- Panasonic will not be liable for any violation of the rights of any third party stemming from use of information in this manual, or for violation of other rights.
- Microsoft, Windows XP and Microsoft Excel are trademarks of Microsoft Corporation in the United States and other countries.
- BACnet is a trademark of the American Society of Heating, Refrigerating and Air-Conditioning Engineers.
  Other product names are trademarks or registered trademarks of the corresponding companies.
  Other products are copyrights of the corresponding companies.

1. Introduction

BACnet™ Software is a communication control software for air conditioning units connected via the BACnet/IP, which is designed to provide a building automation service with increased added value for Air Conditioning Intelligent Management System (referred to below as the P-AIMS system). This software uses the international standard building automation communication protocol BACnet (ISO 16484-5) for communication between building equipments.

This instruction manual describes the operation and setting methods as well as the specifications of BACnet/IP. However, this manual does not contain details on other basic communication functions that are shared with the "Basic Software Instruction Manual". Therefore, please also refer to the CZ-CSWKC2 "Basic Software Instruction Manual" and the instruction manuals for other optional software as well as this manual.

2. Startup and exit

2-1. Startup

1. Double click on the P-AIMS shortcut on the desktop.

The following window appears:

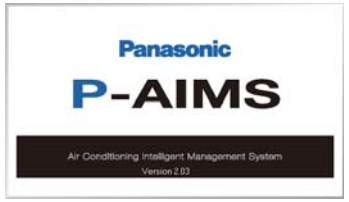

The system starts up and the Status/Operation screen is displayed.

2-2. Exit

1. From the Menu bar, select "Maintenance" - "Exit".

2. The Password Input screen is displayed. Input the password.

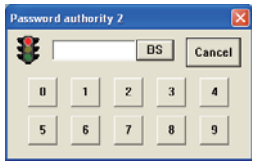

3. The System Exit screen is displayed. Click on the Yes button.

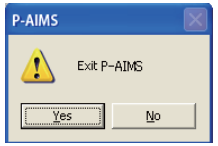

3. Quick Reference

Menu List

Main menu	Sub menu
1. Layout	Layout (options)
2. List display	Status/Operation Filter sign & I/D unit information O/D unit information Operation/Status change log Alarm list & alarm log
3. Schedule	Schedule/results Mode settings (Calendar) Schedule operation time settings Update schedule
4. Print	Print screen EXCEL output * Auto EXCEL output setting Print list List Print preview
5. Distribution ratio	Distribution ratio (optional)
6. Demand	Demand (optional)
7. BACnet	* BACnet basic settings * BACnet indoor unit number settings * BACnet setting CSV output * Create exception schedule T/S ON operation time ☞p5 * I/D unit settings (capacity) * BACnet maintenance settings ☞p6
8. Facility Control	Facility Control (optional)
9. Web	Web (optional)
10. Maintenance	* Register maintenance information * Register floor name * Register control group name * Register schedule group name * Register operator information * R/C prohibition settings Clock settings Data backup/restore * ・Data backup * ・Restore data * ・Cancel data restore * ・Auto backup settings * Register event * Register I/D unit high/low-limit temperature * Auxiliary settings * O/D unit master data settings * I/D unit master data settings * Reset adapter * System maintenance mode * Exit

1. Layout
2. List display
3. Schedule
4. Print
5. Distribution ratio
6. Demand
7. BACnet
8. Facility Control
9. Web
10. Maintenance

* indicates the security code protection screen.

4. Using the system

4-1. BACnet

4-1-1. Operation time with thermostat on

[Procedure]
On the menu bar, select "BACnet" – "T/S ON operating time".

The BACnet number, I/D unit capacity, high, mid., low, and weighting factor total are displayed.

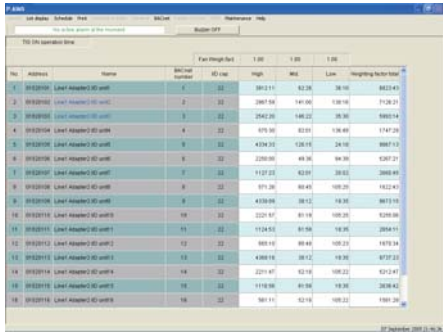

· BACnet number :Number assigned to the indoor unit by BACnet communication with the central monitor.
· I/D cap. :Displays the capacity of the indoor unit. (Weighted value)
· High, Mid., Low :Operating time of each mode.
· Weighting factor total :Total weighted operating time; this value is output on BACnet.
· Fan weigh.fact. :Displays the weighted valued for each fan speed.

* To return to the Status/Operation screen, select List Display - Status/Operation from the menu.

4-1-2. BACnet Maintenance Settings

[Procedure]
From the menu bar, select "BACnet" – "BACnet maintenance settings".

These maintenance settings are used to temporarily stop monitoring an indoor unit with a BACnet indoor unit number during construction work or if a fault has occurred with the unit. Cancelling maintenance can also be performed from this screen.

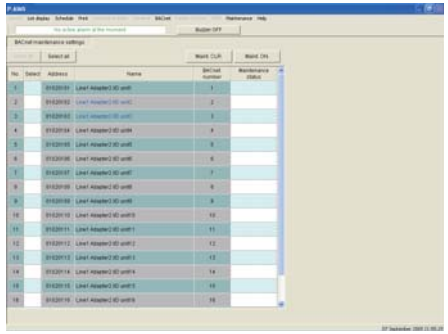

· BACnet number :Number assigned to the indoor unit from BACnet communication with the central monitor.
· Maintenance status :Displays the maintenance setting status.

4-1-2-1. Setting Method

1. Click the I/D unit to be set to add a check to the selection column.

No.	Select
1	✓

2. When [Maint. ON.] is clicked, the "Set maintenance ON as for the selected I/D units (Out_Of_Service=TRUE)" message is displayed.

[Yes] :Settings are performed.
[No] :Settings are not performed.

3. When the settings are performed, "Executing maintenance..." is displayed in the maintenance status column.

Maintenance status
Executing maintenance...

4-1-2-2. Cancellation Method

1. Click the indoor unit to be cancelled to add a check mark to the selection column.

2. When Maint. CLR. is clicked, the "Set maintenance OFF as for the selected I/D units (Out_Of_Service=FALSE)" message is displayed.

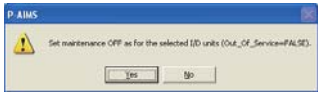

Yes :Settings are performed.

No :Settings are not performed.

5. Supplementary Information

- This system is installed on the computer that is running the CZ-CSWKC2 basic software. Please refer to this along with the Supplementary Information section of the CZ-CSWKC2 basic software instruction manual.

- Selecting Objects (Control Items)
  If the maximum 256 air conditioning units are connected and the number of object specifications is increased, the processing speed decreases because the number of objects to be controlled increases. If faster processing speeds are required, it is necessary to increase the number of BACnet computers to reduce the number of air conditioning units connected to each.

- Restarting P-AIMS
  When shutting down and restarting the P-AIMS system, wait for more than 10 seconds after shutdown before restarting the system. When BACnet is operating, the programs that are performing various operations require time to shut down, and may not restart if the system is restarted too soon.

- BACnet Standby Time
  Approximately 10 seconds ~ 5 minutes time is required for BACnet connection to start after P-AIMS is started (differs depending on the number of air conditioners connected). We do not recommend restarting unless absolutely necessary.

- Instance Number
  The instance number is assigned to each item (function) that is controlled on each air conditioning unit. The number decided by the central monitor manufacturer cannot be changed without permission from the central monitor manufacturer. Changing this number may cause malfunctions such as communication errors.

- Vendor ID
  ID of the BACnet device vendor. Each vendor obtains a different vendor ID. The vendor ID for Sanyo Electric CO., Ltd. is 146.

- BACnet™
  BACnet™ is the abbreviation for the Building Automation and Control networking protocol, and is the protocol for the building automation system proposed by ASHRAE (American Society of Heating, Refrigerating and Air-Conditioning Engineers).
  Furthermore, for details on the BACnet/IP specifications stipulated by ASHRAE, refer to the specifications published by ASHRAE, or the BAS standard interface specifications (IEIE/P-003 2000) and addendum (IEIEJp-A) published by the Institute of Electrical Installation Engineers of Japan.

References

1. ANSI/ASHRAE 135-1995 BACnet:A Data Communication Protocol for Building Automation and Control Networks, 1995
2. ANSI/ASHRAE Standard 135-2001 BACnet:A Data Communication Protocol for Building Automation and Control Networks, 2001
3. Institute of Electrical Installation Engineers of Japan BAS Standard Interface Specifications (IEIEJ-P-0003:2000), 2000
4. Institute of Electrical Installation Engineers of Japan BAS Standard Interface Specifications(IEIEJ-P-0003:2000-a), 2002

6. License Certification

Before using the BACnet Software in the P-AIMS system, you need to first perform a work procedure called "License Certification".

To perform license certification, make an inquiry by sending the inquiry key to the inquiry e-mail address below. You will be registered as a user and issued a release key, and then receive a reply.

<Contact Information>
Product ID Issuance Desk,

E-mail address: cmc_productid_desk@gg.jp.panasonic.com

When you make an inquiry, send the following information together with the inquiry in order to be registered as a user and issued a release key.
(1) Product name
(2) Company name/contact person
(3) Phone number
(4) E-mail address
(5) Inquiry key

* If you do not input a release key, you will no longer be able to use the system after 30 days elapses. Obtain a release key and perform license certification as soon as possible.
* Make an inquiry as soon as possible because it may sometimes take several days to be issued a release key.

License Certification Procedure

The procedure from after the P-AIMS system is installed up until the end of license certification is described below.

(1) Check the inquiry key from the License Certification screen.

(2) Send the inquiry key to the Product ID Issuance Desk (cmc_productid_desk@gg.jp.panasonic.com).
Also notify us of the product name, company name/contact person, phone number, and e-mail address.

(3) A release key is issued.
You are registered as a user and a release key is issued. A reply is sent to the registered mail address.

(4) Input the release key from the License Certification screen.

(5) The license certification procedure is finished.

Performing License Certification

1. A License Certification screen such as the following appears when you start a P-AIMS systems for which license certification is not finished.

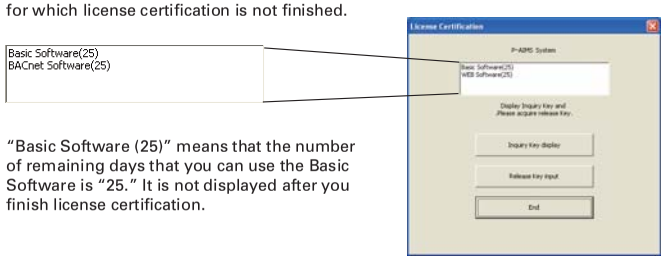

"Basic Software (25)" means that the number of remaining days that you can use the Basic Software is "25." It is not displayed after you finish license certification.

* After you start a P-AIMS system for which license certification is not finished, the License Certification screen will appear at 9:00 a.m. and 3:00 p.m. This screen is not displayed after you finish license certification.
If you install optional software, the License Certification screen will appear until license certification is finished for all of the software.

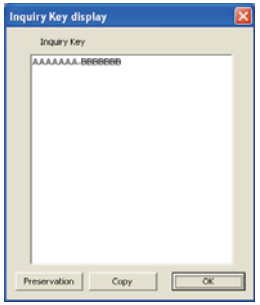

2. If you click the Inquiry Key display button in the License Certification screen, the Inquiry Key display screen appears, and the inquiry key is displayed in the screen.
Send the key displayed in this screen to the Product ID Issuance Desk (cmc_productid_desk@gg.jp.panasonic.com) by e-mail.
At the same time, also notify us of the following items.
(1) Product name (required)
(2) Company name/contact person
(3) Phone number
(4) E-mail address (required)
You will be registered as a user and issued a release key.

Preservation :Clicking this button saves the inquiry key as a text file. Follow the instructions on the screen to save the text file. Enter the product name, company name/contact person, phone number, and e-mail address in this saved text file, and send the text file to the Product ID Issuance Desk by e-mail.

Copy :Clicking this button copies the inquiry key to the Windows clipboard. Paste the inquiry key into your mail.

OK :Clicking this button closes the Inquiry Key display screen.

3. When you receive the release key, restart the P-AIMS system. See "2. Startup and shutdown" for how to restart the P-AIMS system, and then restart the system.

   If license certification is not finished for the P-AIMS system, the License Certification screen on the right appears before the P-AIMS system restarts.

   Click the [Release Key input] button to display the Release Key input screen, and enter the release key.

> * If you install multiple P-AIMS system software, the same number of license certifications is required. In such a case, the number of release keys sent will be the same as the number of inquiry keys.
> Enter all of the received release keys sequentially, and perform license certification. (There is no set order for entering release keys, so they can be entered in any order.)

License certification is finished once all of the release keys have been entered.

Click the [End] button. The License Certification screen closes, and the P-AIMS system starts.

> * The P-AIMS system will start even if you click the [End] button without entering the release key. You can use the system as is until license certification is finished. (The system can be used for a period of 30 days.)

7. Preparation

7-1. Installation

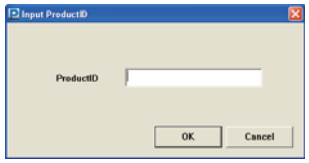

1. First, stop the P-AIMS system. Insert the BACnet Software CZ-CSWBC2 CD for your total air conditioning system (P-AIMS system) into the CD-ROM drive. The program on the CD-ROM starts automatically and makes preparations for installation. If installation does not start, double-click "Setup.exe" of the CD-ROM drive to start it.
   Enter the Product ID in the Input Product ID screen that appears.
   For the Product ID, see the "Product ID Issuance Certificate" supplied with the software.

> * Keep the "Product ID Issuance Certificate" in a safe place. The Product ID is required to install the air-conditioning integrated system. The "Product ID Issuance Certificate" will not be reissued.

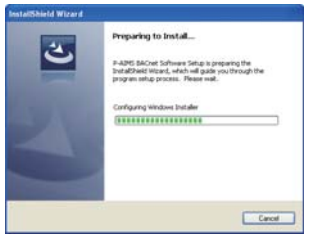

2. The InstallShield(R) Wizard prepares to install the P-AIMS system.

3. After a short while, the "The InstallShield(R) Wizard will install P-AIMS BACnet Software on your computer. To continue, click Next." message appears. Click the [Next >] button.

4. Next, the License Agreement screen appears. Carefully read the license agreement, and click "I accept the terms in the license agreement" if you agree to the terms of the license agreement.
The [Next >] button becomes active.
Click the [Next >] button. (The software cannot be installed if you do not agree to the terms of the license agreement.)

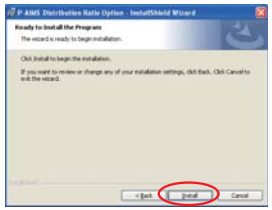

5. The "The wizard is ready to begin installation. Click Install to begin the installation." message appears. Click the [Install] button.

The installation of the P-AIMS system begins.

Please wait a while.

6. When the P-AIMS system setup is finished, the installation complete screen appears.
Click the [Finish] button to complete the installation.

* When installing the BACnet Software, it is possible to install this system without stopping the P-AIMS system. However, the BACnet Software functions are not added. In this case, restart the P-AIMS system.

7-2. Display at restart

After restart, the BACnet functions become active and "BACnet" can be selected in the menu.

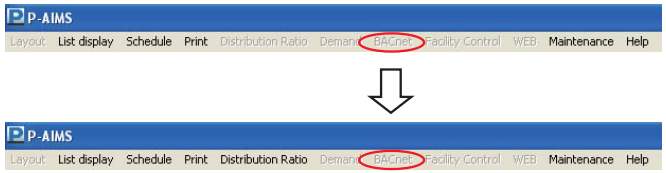

7-3 Settings

After installation is completed, registration and settings such as "BACnet basic settings" and "BACnet indoor unit number settings" are required.

Entrust the registration of "BACnet basic settings" and "BACnet indoor unit number settings" to the place of purchase or a service company.

16. Intelligent Management System

User memo space

If you fill this out at the time of purchase, it is convenient when ordering repairs etc.

Serial No.	
Date of installation	
Dealer	Telephone No. ( )

Contents

4. 2WAY SYSTEM UNIT SPECIFICATIONS

1. Outdoor Unit 4-4
1-1. Specifications 4-4
• Standard-COP mode 4-4
1-2. Dimensional Data 4-13
1-3. Multiple Unit Installation Example 4-16
• Standard-COP mode 4-16
• High-COP mode 4-25
1-4. Refrigerant Flow Diagram 4-37
1-5. Noise Criterion Curves 4-41
2. 4-Way Cassette Type (U1 Type) 4-43
2-1. Specifications 4-43
2-2. Major Component Specifications 4-47
2-3. Dimensional Data 4-58
2-4. Noise Criterion Curves 4-61
2-5. Air Flow Distance / Temperature Chart 4-63
3. Low Silhouette Ducted Type (F2 Type) 4-66
3-1. Specifications 4-66
3-2. Major Component Specifications 4-70
3-3. Dimensional Data 4-81
3-4. Noise Criterion Curves 4-82
3-5. External Static Pressure Setting 4-84
4. 4-Way Cassette 60×60 Type (Y2 Type) 4-88
4-1. Specifications 4-88
4-2. Major Component Specifications 4-90
4-3. Dimensional Data 4-95
4-4. Noise Criterion Curves 4-96
4-5. Air Flow Distance / Temperature Chart 4-98
5. Wall Mounted Type (K2 Type) 4-100
5-1. Specifications 4-100
5-2. Major Component Specifications 4-101
5-3. Dimensional Data 4-104
5-4. Noise Criterion Curves 4-105
5-5. Air Flow Distance / Temperature Chart 4-106
6. High Static Pressure Ducted Type (E1 Type) 4-107
6-1. Specifications 4-107
6-2. Major Component Specifications 4-108
6-3. Dimensional Data 4-109
6-4. Noise Criterion Curves 4-110
6-5. R.A.P. (Refrigerant Accumulation Protector) Valve Kit 4-111
6-6. Indoor Fan Performance 4-112
7. 4-Way Cassette Type (U1 Type) 4-113
7-1. Specifications 4-113
7-2. Major Component Specifications 4-122
7-3. Dimensional Data 4-131
7-4. Noise Criterion Curves 4-134
7-5. Air Flow Distance / Temperature Chart 4-136

Contents

8. 4-Way Cassette 60×60 Type (Y1 Type) 4-139
8-1. Specifications 4-139
8-2. Major Component Specifications 4-144
8-3. Dimensional Data 4-149
8-4. Noise Criterion Curves 4-150
8-5. Air Flow Distance / Temperature Chart 4-151
9. 2-Way Cassette Type (L1 Type) 4-153
9-1. Specifications 4-153
9-2. Major Component Specifications 4-159
9-3. Dimensional Data 4-165
9-4. Noise Criterion Curves 4-167
9-5. Air Flow Distance Chart 4-168
10. Wall Mounted Type (K1 Type) 4-169
10-1. Specifications 4-169
10-2. Major Component Specifications 4-176
10-3. Dimensional Data 4-183
10-4. Noise Criterion Curves 4-185
10-5. Air Flow Distance / Temperature Chart 4-187
11. Ceiling Type (T1 Type) 4-190
11-1. Specifications 4-190
11-2. Major Component Specifications 4-196
11-3. Dimensional Data 4-202
11-4. Noise Criterion Curves 4-203
11-5. Air Flow Distance / Temperature Chart 4-204
12. Low Silhouette Ducted Type (F1 Type) 4-207
12-1. Specifications 4-207
12-2. Major Component Specifications 4-217
12-3. Dimensional Data 4-227
12-4. Noise Criterion Curves 4-231
12-5. Increasing the Fan Speed 4-233
13. High Static Pressure Ducted Type (E1 Type) 4-234
13-1. Specifications 4-234
13-2. Major Component Specifications 4-239
13-3. Dimensional Data 4-244
13-4. Noise Criterion Curves 4-246
13-5.R.A.P. (Refrigerant Accumulation Protector) Valve Kit 4-248
13-6.Indoor Fan Performance 4-249
14. Floor Standing Type (P1 Type) 4-251
14-1. Specifications 4-251
14-2. Major Component Specifications 4-257
14-3. Dimensional Data 4-263
14-4. Noise Criterion Curves 4-264
14-5. Air Flow Distance Chart 4-265

Contents

15. Concealed Floor Standing Type (R1 Type) 4-266
15-1. Specifications 4-266
15-2. Major Component Specifications..... 4-272
15-3. Dimensional Data 4-278
15-4. Noise Criterion Curves 4-279
15-5. Air Flow Distance Chart 4-280
15-6. Indoor Fan Performance..... 4-281
16. 1-Way Cassette Type (D1 Type)..... 4-282
16-1. Specifications 4-282
16-2. Major Component Specifications..... 4-287
16-3. Dimensional Data 4-291
16-4. Noise Criterion Curves 4-292
16-5. Air Flow Distance Chart 4-293
17. Slim Low Static Ducted Type (M1 Type)..... 4-294
17-1. Specifications 4-294
17-2. Major Component Specifications..... 4-299
17-3. Dimensional Data 4-304
17-4. Noise Criterion Curves 4-305
17-5. Increasing the Fan Speed 4-306
18. Intaking Fresh Air of 4-Way Cassette Type and Slim Low Static Ducted Type..... 4-307
- U1, Y1 Types..... 4-308
- M1 Type 4-308

4

1. Outdoor Unit

1-1. Specifications (Standard-COP mode)

Unit specifications (1)

OUTDOOR		MODEL	U-8ME1E81			U-10ME1E81			U-12ME1E81		
PERFORMANCE TEST CONDITION			EN14511			EN14511			EN14511		
POWER SUPPLY		ø, Hz	3ø 50Hz			3ø 50Hz			3ø 50Hz		
		V	380	400	415	380	400	415	380	400	415
COOLING	CAPACITY	kW	22.4	22.4	22.4	28.0	28.0	28.0	33.5	33.5	33.5
		BTU/h	76500	76500	76500	95600	95600	95600	114300	114300	114300
		kcal/h(Fri./h)	-	-	-	-	-	-	-	-	-
	CURRENT	A	8.90	8.50	8.20	12.90	12.20	11.80	15.40	14.60	14.10
	INPUT POWER	W	5.54k	5.54k	5.54k	7.78k	7.78k	7.78k	9.29k	9.29k	9.29k
	ANNUAL CONSUMPTION	W *4	-	-	-	-	-	-	-	-	-
	EER/EER CLASS	(W/W)*5/("A"~"G")	4.04	4.04	4.04	3.60	3.60	3.60	3.61	3.61	3.61
	EER	BTU/hW	-	-	-	-	-	-	-	-	-
	POWER FACTOR	%	95	94	94	92	92	92	92	92	92
	NOISE INDOOR (H/L)	dB-A	-			-			-		
		Power Level dB	-			-			-		
	NOISE OUTDOOR (H/L)	dB-A	56.5 / -			59.0 / -			61.0 / -		
		Power Level dB	71.0 / -			73.5 / -			75.5 / -		
HEATING	CAPACITY	kW	25.0	25.0	25.0	31.5	31.5	31.5	37.5	37.5	37.5
		BTU/h	85300	85300	85300	107500	107500	107500	128000	128000	128000
		kcal/h(Fri./h)	-	-	-	-	-	-	-	-	-
	CURRENT	A	8.80	8.40	8.10	12.70	12.10	11.60	15.10	14.40	13.90
	INPUT POWER	W	5.48k	5.48k	5.48k	7.68k	7.68k	7.68k	9.15k	9.15k	9.15k
	COP/COP CLASS	(W/W)*5/("A"~"G")	4.56	4.56	4.56	4.10	4.10	4.10	4.10	4.10	4.10
	COP	BTU/hW	-	-	-	-	-	-	-	-	-
	POWER FACTOR	%	95	94	94	92	92	92	92	92	92
	NOISE INDOOR (H/L)	dB-A	-			-			-		
		Power Level dB	-			-			-		
EXTRA LOW TEMP	CAPACITY(kW)/INPUT POWER(W)/COP		-			-			-		
	MAX CURRENT(A)/MAX INPUT POWER(W)		11.7 / 7.3k	11.7 / 7.6k	11.7 / 7.9k	16.4 / 9.9k	16.4 / 10.5k	16.4 / 10.8k	19.7 / 11.9k	19.7 / 12.5k	19.7 / 13.0k
STARTING CURRENT(A)/COMP OUTPUT(W)			1 / -	1 / -	1 / -	1 / -	1 / -	1 / -	78 / -	81 / -	85 / -
NETWORK IMPEDANCE (ΩMAX.) *3			-			-			-		
FM OUTPUT (I.D./O.D.) W			-	/	750	-	/	750	-	/	750
MOISTURE REMOVAL VOLUME		L/h(Pt/h)	-			-			-		
External static pressure		Pa {mmAq}	0 ~ 80		{0.00 ~ 8.16}	0 ~ 80		{0.00 ~ 8.16}	0 ~ 80		{0.00 ~ 8.16}
I.D. AIR FLOW	COOL	m^3/min (ft^3/min)	-			-			-		
	HEAT	m^3/min (ft^3/min)	-			-			-		
O.D. AIR FLOW		m^3/min (ft^3/min)	147		(5191)	153		(5403)	190		(6710)
REFRIGERANT TYPE, AMOUNT (O.D. Base / MAX) g(oz)			R410A	6.5k / 50.0k	(229 / 1764)	R410A	6.8k / 50.0k	(240 / 1764)	R410A	6.8k / 50.0k	(240 / 1764)
PROD DIM	HEIGHT : H mm(inch) O.D.		1758		(69-7/32)	1758		(69-7/32)	1758		(69-7/32)
	WIDTH : W mm(inch) O.D.		770		(30-5/16)	770		(30-5/16)	770		(30-5/16)
	DEPTH : D mm(inch) O.D.		930		(36-39/64)	930		(36-39/64)	930		(36-39/64)
PACK DIM	HEIGHT : H mm(inch) O.D.		1873		(73-47/64)	1873		(73-47/64)	1873		(73-47/64)
	WIDTH : W mm(inch) O.D.		878		(34-9/16)	878		(34-9/16)	878		(34-9/16)
	DEPTH : D mm(inch) O.D.		1030		(40-35/64)	1030		(40-35/64)	1030		(40-35/64)
MASS	(NET) kg(lb) O.D.		234		(516)	234		(516)	281		(619)
	(GROSS) kg(lb) O.D.		245		(540)	245		(540)	292		(644)
LAYERS LIMIT (actually)			1 (2)			1 (2)			1 (2)		
Operation Condition		Cool O.D. (DBT)	-10°C ~ 43°C			-10°C ~ 43°C			-10°C ~ 43°C		
		Heat O.D. (WBT)	-25°C ~ 15°C			-25°C ~ 15°C			-25°C ~ 15°C		
PIPING	MAIN PIPE DIAMETER (NORMAL) mm (inch) (OVER 90m FOR ULTIMATE I.D.) mm (inch)		(Liquid) ø9.52 (3/8) (Gas) ø19.05 (3/4) *1 (Balance) ø6.35(1/4) (Liquid) ø12.7 (1/2) (Gas) ø22.22 (7/8)			(Liquid) ø9.52 (3/8) (Gas) ø22.22 (7/8) *1 (Balance) ø6.35(1/4) (Liquid) ø12.7 (1/2) (Gas) ø25.4 (1 inch)			(Liquid) ø12.7 (1/2) (Gas) ø25.4 (1 inch) *1 (Balance) ø6.35(1/4) (Liquid) ø15.88 (5/8) (Gas) ø28.58 (1-1/8)		
	CONNECT METHOD		flared(Liquid) ,brazing(Gas) ,flared(Balance)			flared(Liquid) ,brazing(Gas) ,flared(Balance)			flared(Liquid) ,brazing(Gas) ,flared(Balance)		
	PIPE LENGTH RANGE m (ft)		7.5 ~ 1000		(24.6 ~ 3280.8)	7.5 ~ 1000		(24.6 ~ 3280.8)	7.5 ~ 1000		(24.6 ~ 3280.8)
	I.D.&O.D. HEIGHT DIFFERENCE (O.D. upper / O.D. Lower) m (ft)		50 / 40		(164.0 / 131.2)	50 / 40		(164.0 / 131.2)	50 / 40		(164.0 / 131.2)
	PIPE LENGTH FOR ADDITIONAL GAS m (ft)		0 ~		(0 ~) *2	0 ~		(0 ~) *2	0 ~		(0 ~) *2

*1: Main Pipe Diameter size-up apply to O.D. to first branch pipe
*2: It's necessary to add Gas corresponding to total liquid pipe length, even if installation condition is shortest pipe length.
*3: Network Impedance shall be applicable for EUROPE and CHINA models.
*4: The annual consumption is calculated by multiplying the input power at 230V(400V) by an average of 500 hours per year in cooling mode.
*5: EER and COP classification is at 230V(400V) only in accordance with EU directive 2002/31/EC. (Scope:Cooling capacity less than 12kW)
* : In case it is necessary to indicate the air flow volume in (l/s), the value in (m^3/min.) shall be multiplied by 16.7 and rounded down the decimal point.
* : If the EUROVENT Certified models can be operated under the "extra-low" temperature condition, -7°C dry bulb and -8°C wet-bulb temperatures with rated voltage 230V shall be used.

1. Outdoor Unit

1-1. Specifications (Standard-COP mode)

Unit specifications (2)

OUTDOOR		MODEL	U-14ME1E81			U-16ME1E81			U-18ME1E81		
PERFORMANCE TEST CONDITION			EN14511			EN14511			EN14511		
POWER SUPPLY		ø, Hz	3ø 50Hz			3ø 50Hz			3ø 50Hz		
		V	380	400	415	380	400	415	380	400	415
COOLING	CAPACITY	kW	40.0	40.0	40.0	45.0	45.0	45.0	50.0	50.0	50.0
		BTU/h	136500	136500	136500	153600	153600	153600	170600	170600	170600
		kcal/h(Fri./h)	-	-	-	-	-	-	-	-	-
	CURRENT	A	18.00	17.10	16.50	21.80	20.70	19.90	24.00	22.80	22.00
	INPUT POWER	W	11.10k	11.10k	11.10k	13.40k	13.40k	13.40k	14.30k	14.30k	14.30k
	ANNUAL CONSUMPTION	W *4	-	-	-	-	-	-	-	-	-
	EER/EER CLASS	(W/W)*5/("A"~"G")	3.60	3.60	3.60	3.36	3.36	3.36	3.50	3.50	3.50
	EER	BTU/hW	-	-	-	-	-	-	-	-	-
	POWER FACTOR	%	94	94	94	93	93	94	91	91	90
	NOISE INDOOR (H/L)	dB-A	-			-			-		
		Power Level dB	-			-			-		
	NOISE OUTDOOR (H/L)	dB-A	62.0 / -			62.0 / -			60.0 / -		
		Power Level dB	76.5 / -			76.5 / -			74.5 / -		
HEATING	CAPACITY	kW	45.0	45.0	45.0	50.0	50.0	50.0	56.0	56.0	56.0
		BTU/h	153600	153600	153600	170600	170600	170600	191100	191100	191100
		kcal/h(Fri./h)	-	-	-	-	-	-	-	-	-
	CURRENT	A	17.40	16.50	15.90	21.10	20.10	19.30	24.30	23.10	22.30
	INPUT POWER	W	10.70k	10.70k	10.70k	13.00k	13.00k	13.00k	14.50k	14.50k	14.50k
	COP/COP CLASS	(W/W)*5/("A"~"G")	4.21	4.21	4.21	3.85	3.85	3.85	3.86	3.86	3.86
	COP	BTU/hW	-	-	-	-	-	-	-	-	-
	POWER FACTOR	%	93	94	94	94	93	94	91	91	90
	NOISE INDOOR (H/L)	dB-A	-			-			-		
		Power Level dB	-			-			-		
EXTRA LOW TEMP		CAPACITY(kW)/INPUT POWER(W)/COP	-			-			-		
		MAX CURRENT(A)/MAX INPUT POWER(W)	23.3 / 14.4k	23.3 / 15.1k	23.3 / 15.7k	28.4 / 17.5k	28.4 / 18.4k	28.4 / 19.1k	30.5 / 18.2k	30.5 / 19.1k	30.5 / 19.8k
STARTING CURRENT(A)/COMP OUTPUT(W)			74 / -	77 / -	80 / -	78 / -	81 / -	85 / -	91 / -	93 / -	96 / -
NETWORK IMPEDANCE (ΩMAX.) *3			-			-			-		
FM OUTPUT (I.D./O.D.) W			-	/	750	-	/	750	-	/	750×2
MOISTURE REMOVAL VOLUME		L/h(Pt/h)	-			-			-		
External static pressure		Pa {mmAq}	0 ~ 80		{0.00 ~ 8.16}	0 ~ 80		{0.00 ~ 8.16}	0 ~ 80		{0.00 ~ 8.16}
I.D. AIR FLOW	COOL	m^3/min (ft^3/min)	-			-			-		
	HEAT	m^3/min (ft^3/min)	-			-			-		
O.D. AIR FLOW		m^3/min (ft^3/min)	212		(7487)	212		(7487)	244		(8617)
REFRIGERANT TYPE, AMOUNT (O.D. Base / MAX) g(oz)			R410A	8.5k / 50.0k	(300 / 1764)	R410A	8.5k / 50.0k	(300 / 1764)	R410A	9.0k / 50.0k	(317 / 1764)
PROD DIM	HEIGHT : H mm(inch) O.D.		1758		(69-7/32)	1758		(69-7/32)	1758		(69-7/32)
	WIDTH : W mm(inch) O.D.		1000		(39-3/8)	1000		(39-3/8)	1540		(60-5/8)
	DEPTH : D mm(inch) O.D.		930		(36-39/64)	930		(36-39/64)	930		(36-39/64)
PAC DIM	HEIGHT : H mm(inch) O.D.		1873		(73-47/64)	1873		(73-47/64)	1873		(73-47/64)
	WIDTH : W mm(inch) O.D.		1108		(43-5/8)	1108		(43-5/8)	1695		(66-47/64)
	DEPTH : D mm(inch) O.D.		1030		(40-35/64)	1030		(40-35/64)	1030		(40-35/64)
MASS	(NET) kg(lb) O.D.		309		(681)	309		(681)	421		(928)
	(GROSS) kg(lb) O.D.		322		(710)	322		(710)	440		(970)
LAYERS LIMIT (actually)			1 (2)			1 (2)			1 (2)		
Operation Condition		Cool O.D. (DBT)	-10°C ~ 43°C			-10°C ~ 43°C			-10°C ~ 43°C		
		Heat O.D. (WBT)	-25°C ~ 15°C			-25°C ~ 15°C			-25°C ~ 15°C		
PIPING	MAIN PIPE DIAMETER (NORMAL) mm (inch) (OVER 90m FOR ULTIMATE I.D.) mm (inch)		(Liquid) ø12.7 (1/2) (Gas) ø25.4 (1 inch) *1 (Balance) ø6.35(1/4) (Liquid) ø15.88 (5/8) (Gas) ø28.58 (1-1/8)			(Liquid) ø12.7 (1/2) (Gas) ø28.58 (1-1/8) *1 (Balance) ø6.35(1/4) (Liquid) ø15.88 (5/8) (Gas) ø31.75 (1-1/4)			(Liquid) ø15.88 (5/8) (Gas) ø28.58 (1-1/8) *1 (Balance) ø6.35(1/4) (Liquid) ø19.05 (3/4) (Gas) ø31.75 (1-1/4)		
	CONNECT METHOD		flared(Liquid) ,brazing(Gas) ,flared(Balance)			flared(Liquid) ,brazing(Gas) ,flared(Balance)			flared(Liquid) ,brazing(Gas) ,flared(Balance)		
	PIPE LENGTH RANGE m (ft)		7.5 ~ 1000		(24.6 ~ 3280.8)	7.5 ~ 1000		(24.6 ~ 3280.8)	7.5 ~ 1000		(24.6 ~ 3280.8)
	I.D.&O.D. HEIGHT DIFFERENCE (O.D. upper / O.D. Lower) m (ft)		50 / 40		(164.0 / 131.2)	50 / 40		(164.0 / 131.2)	50 / 40		(164.0 / 131.2)
	PIPE LENGTH FOR ADDITIONAL GAS m (ft)		0 ~		(0 ~) *2	0 ~		(0 ~) *2	0 ~		(0 ~) *2

*1: Main Pipe Diameter size-up apply to O.D. to first branch pipe
*2: It's necessary to add Gas corresponding to total liquid pipe length, even if installation condition is shortest pipe length.
*3: Network Impedance shall be applicable for EUROPE and CHINA models.
*4: The annual consumption is calculated by multiplying the input power at 230V(400V) by an average of 500 hours per year in cooling mode.
*5: EER and COP classification is at 230V(400V) only in accordance with EU directive 2002/31/EC. (Scope:Cooling capacity less than 12kW)
* : In case it is necessary to indicate the air flow volume in (l/s), the value in (m^3/min.) shall be multiplied by 16.7 and rounded down the decimal point.
* : If the EUROVENT Certified models can be operated under the "extra-low" temperature condition, -7°C dry bulb and -8°C wet-bulb temperatures with rated voltage 230V shall be used.

4

1. Outdoor Unit

1-1. Specifications (Standard-COP mode)

Unit specifications (3)

OUTDOOR		MODEL	U-20ME1E81			U-14ME1E81 / U-8ME1E81			U-14ME1E81 / U-10ME1E81		
PERFORMANCE TEST CONDITION			EN14511			EN14511			EN14511		
POWER SUPPLY		ø, Hz	3ø 50Hz			3ø 50Hz			3ø 50Hz		
		V	380	400	415	380	400	415	380	400	415
COOLING	CAPACITY	kW	56.0	56.0	56.0	61.5	61.5	61.5	68.0	68.0	68.0
		BTU/h	191100	191100	191100	209900	209900	209900	232100	232100	232100
		kcal/h(Fri./h)	-	-	-	-	-	-	-	-	-
	CURRENT	A	28.20	26.80	25.80	26.60	25.20	24.30	30.90	29.40	28.30
	INPUT POWER	W	16.80k	16.80k	16.80k	16.40k	16.40k	16.40k	18.90k	18.90k	18.90k
	ANNUAL CONSUMPTION	W *4	-	-	-	-	-	-	-	-	-
	EER/EER CLASS	(W/W)*5/("A"~"G")	3.33	3.33	3.33	3.75	3.75	3.75	3.60	3.60	3.60
	EER	BTU/hW	-	-	-	-	-	-	-	-	-
	POWER FACTOR	%	91	90	91	94	94	94	93	93	93
	NOISE INDOOR (H/L)	dB-A	-			-			-		
		Power Level dB	-			-			-		
	NOISE OUTDOOR (H/L)	dB-A	63.0 / -			63.0 / -			63.5 / -		
		Power Level dB	77.5 / -			77.5 / -			78.0 / -		
HEATING	CAPACITY	kW	63.0	63.0	63.0	69.0	69.0	69.0	76.5	76.5	76.5
		BTU/h	215000	215000	215000	235500	235500	235500	261100	261100	261100
		kcal/h(Fri./h)	-	-	-	-	-	-	-	-	-
	CURRENT	A	27.70	26.30	25.40	25.80	24.50	23.60	30.60	29.10	28.00
	INPUT POWER	W	16.50k	16.50k	16.50k	15.90k	15.90k	15.90k	18.70k	18.70k	18.70k
	COP/COP CLASS	(W/W)*5/("A"~"G")	3.82	3.82	3.82	4.34	4.34	4.34	4.09	4.09	4.09
	COP	BTU/hW	-	-	-	-	-	-	-	-	-
	POWER FACTOR	%	91	91	90	94	94	94	93	93	93
	NOISE INDOOR (H/L)	dB-A	-			-			-		
		Power Level dB	-			-			-		
EXTRA LOW TEMP	CAPACITY(kW)/INPUT POWER(W)/COP		-			-			-		
	MAX CURRENT(A)/MAX INPUT POWER(W)		35.4 / 21.1k	35.4 / 22.2k	35.4 / 23.1k	35.0 / 21.6k	35.0 / 22.8k	35.0 / 23.6k	39.7 / 24.3k	39.7 / 25.5k	39.7 / 26.5k
STARTING CURRENT(A)/COMP OUTPUT(W)			98 / -	101 / -	103 / -	83 / -	86 / -	88 / -	92 / -	94 / -	96 / -
NETWORK IMPEDANCE (ΩMAX.) *3			-			-			-		
FM OUTPUT (I.D./O.D.) W			-	/	750×2	-	/	750×2	-	/	750×2
MOISTURE REMOVAL VOLUME		L/h(Pt/h)	-			-			-		
External static pressure		Pa {mmAq}	0 ~ 80		{0.00 ~ 8.16}	0 ~ 80		{0.00 ~ 8.16}	0 ~ 80		{0.00 ~ 8.16}
I.D. AIR FLOW	COOL	m^3/min (ft^3/min)	-			-			-		
	HEAT	m^3/min (ft^3/min)	-			-			-		
O.D. AIR FLOW		m^3/min (ft^3/min)	283		(9994)	359		(12678)	365		(12890)
REFRIGERANT TYPE, AMOUNT (O.D. Base / MAX) g(oz)			R410A	9.0k / 50.0k	(317 / 1764)	R410A	15.0k / 80.0k	(529 / 2822)	R410A	15.3k / 80.0k	(540 / 2822)
PROD DIM	HEIGHT : H mm(inch) O.D.		1758		(69-7/32)	1758		(69-7/32)	1758		(69-7/32)
	WIDTH : W mm(inch) O.D.		1540		(60-5/8)	1830		(72-3/64)	1830		(72-3/64)
	DEPTH : D mm(inch) O.D.		930		(36-39/64)	930		(36-39/64)	930		(36-39/64)
PACK DIM	HEIGHT : H mm(inch) O.D.		1873		(73-47/64)	-		-	-		-
	WIDTH : W mm(inch) O.D.		1696		(66-49/64)	-		-	-		-
	DEPTH : D mm(inch) O.D.		1030		(40-35/64)	-		-	-		-
MASS	(NET) kg(lb) O.D.		421		(928)	543		(1197)	543		(1197)
	(GROSS) kg(lb) O.D.		440		(970)	567		(1250)	567		(1250)
LAYERS LIMIT (actually)			1 (2)			1 (2)			1 (2)		
Operation Condition		Cool O.D. (DBT)	-10°C ~ 43°C			-10°C ~ 43°C			-10°C ~ 43°C		
		Heat O.D. (WBT)	-25°C ~ 15°C			-25°C ~ 15°C			-25°C ~ 15°C		
PIPING	MAIN PIPE DIAMETER (NORMAL) mm (inch) (OVER 90m FOR ULTIMATE I.D.) mm (inch)		(Liquid) ø15.88 (5/8) (Gas) ø28.58 (1-1/8) *1 (Balance) ø6.35(1/4) (Liquid) ø19.05 (3/4) (Gas) ø31.75 (1-1/4)			(Liquid) ø15.88 (5/8) (Gas) ø28.58 (1-1/8) *1 (Balance) ø6.35(1/4) (Liquid) ø19.05 (3/4) (Gas) ø31.75 (1-1/4)			(Liquid) ø15.88 (5/8) (Gas) ø28.58 (1-1/8) *1 (Balance) ø6.35(1/4) (Liquid) ø19.05 (3/4) (Gas) ø31.75 (1-1/4)		
	CONNECT METHOD		flared(Liquid) ,brazing(Gas) ,flared(Balance)			flared(Liquid) ,brazing(Gas) ,flared(Balance)			flared(Liquid) ,brazing(Gas) ,flared(Balance)		
	PIPE LENGTH RANGE m (ft)		7.5 ~ 1000		(24.6 ~ 3280.8)	7.5 ~ 1000		(24.6 ~ 3280.8)	7.5 ~ 1000		(24.6 ~ 3280.8)
	I.D.&O.D. HEIGHT DIFFERENCE (O.D. upper / O.D. Lower) m (ft)		50 / 40		(164.0 / 131.2)	50 / 40		(164.0 / 131.2)	50 / 40		(164.0 / 131.2)
	PIPE LENGTH FOR ADDITIONAL GAS m (ft)		0 ~		(0 ~) *2	0 ~		(0 ~) *2	0 ~		(0 ~) *2

*1: Main Pipe Diameter size-up apply to O.D. to first branch pipe
*2: It's necessary to add Gas corresponding to total liquid pipe length, even if installation condition is shortest pipe length.
*3: Network Impedance shall be applicable for EUROPE and CHINA models.
*4: The annual consumption is calculated by multiplying the input power at 230V(400V) by an average of 500 hours per year in cooling mode.
*5: EER and COP classification is at 230V(400V) only in accordance with EU directive 2002/31/EC. (Scope:Cooling capacity less than 12kW)
* : In case it is necessary to indicate the air flow volume in (l/s), the value in (m^3/min.) shall be multiplied by 16.7 and rounded down the decimal point.
* : If the EUROVENT Certified models can be operated under the "extra-low" temperature condition, -7°C dry bulb and -8°C wet-bulb temperatures with rated voltage 230V shall be used.

1. Outdoor Unit

1-1. Specifications (Standard-COP mode)

Unit specifications (4)

OUTDOOR		MODEL	U-14ME1E81 / U-12ME1E81			U-16ME1E81 / U-12ME1E81			U-16ME1E81 / U-14ME1E81		
PERFORMANCE TEST CONDITION			EN14511			EN14511			EN14511		
POWER SUPPLY		ø, Hz	3ø 50Hz			3ø 50Hz			3ø 50Hz		
		V	380	400	415	380	400	415	380	400	415
COOLING	CAPACITY	kW	73.0	73.0	73.0	78.5	78.5	78.5	85.0	85.0	85.0
		BTU/h	249100	249100	249100	267900	267900	267900	290100	290100	290100
		kcal/h(Fri./h)	-	-	-	-	-	-	-	-	-
	CURRENT	A	33.30	31.60	30.50	37.00	35.20	33.90	39.80	37.80	36.50
	INPUT POWER	W	20.30k	20.30k	20.30k	22.60k	22.60k	22.60k	24.50k	24.50k	24.50k
	ANNUAL CONSUMPTION	W *4	-	-	-	-	-	-	-	-	-
	EER/EER CLASS	(W/W)*5/("A"~"G")	3.60	3.60	3.60	3.47	3.47	3.47	3.47	3.47	3.47
	EER	BTU/hW	-	-	-	-	-	-	-	-	-
	POWER FACTOR	%	93	93	93	93	93	93	94	94	93
	NOISE INDOOR (H/L)	dB-A	-			-			-		
		Power Level dB	-			-			-		
	NOISE OUTDOOR (H/L)	dB-A	64.5 / -			64.5 / -			65.0 / -		
		Power Level dB	79.0 / -			79.0 / -			79.5 / -		
HEATING	CAPACITY	kW	81.5	81.5	81.5	87.5	87.5	87.5	95.0	95.0	95.0
		BTU/h	278200	278200	278200	298600	298600	298600	324200	324200	324200
		kcal/h(Fri./h)	-	-	-	-	-	-	-	-	-
	CURRENT	A	32.50	30.80	29.70	36.20	34.40	33.10	38.30	36.40	35.10
	INPUT POWER	W	19.80k	19.80k	19.80k	22.10k	22.10k	22.10k	23.60k	23.60k	23.60k
	COP/COP CLASS	(W/W)*5/("A"~"G")	4.12	4.12	4.12	3.96	3.96	3.96	4.03	4.03	4.03
	COP	BTU/hW	-	-	-	-	-	-	-	-	-
	POWER FACTOR	%	93	93	93	93	93	93	94	94	94
	NOISE INDOOR (H/L)	dB-A	-			-			-		
		Power Level dB	-			-			-		
EXTRA LOW TEMP	CAPACITY(kW)/INPUT POWER(W)/COP		-			-			-		
	MAX CURRENT(A)/MAX INPUT POWER(W)		43.0 / 26.2k	43.0 / 27.6k	43.0 / 28.6k	48.1 / 29.4k	48.1 / 30.9k	48.1 / 32.1k	51.7 / 31.8k	51.7 / 33.5k	51.7 / 34.7k
STARTING CURRENT(A)/COMP OUTPUT(W)			96 / -	98 / -	101 / -	100 / -	102 / -	105 / -	96 / -	98 / -	101 / -
NETWORK IMPEDANCE (ΩMAX.) *3			-			-			-		
FM OUTPUT (I.D./O.D.) W			-	/	750×2	-	/	750×2	-	/	750×2
MOISTURE REMOVAL VOLUME		L/h(Pt/h)	-			-			-		
External static pressure		Pa {mmAq}	0 ~ 80		{0.00 ~ 8.16}	0 ~ 80		{0.00 ~ 8.16}	0 ~ 80		{0.00 ~ 8.16}
I.D. AIR FLOW	COOL	m^3/min (ft^3/min)	-			-			-		
	HEAT	m^3/min (ft^3/min)	-			-			-		
O.D. AIR FLOW		m^3/min (ft^3/min)	402		(14196)	402		(14196)	424		(14973)
REFRIGERANT TYPE, AMOUNT (O.D. Base / MAX) g(oz)			R410A	15.3k / 80.0k (540 / 2822)		R410A	15.3k / 80.0k (540 / 2822)		R410A	17.0k / 80.0k (600 / 2822)	
PROD DIM	HEIGHT : H mm(inch) O.D.		1758	(69-7/32)		1758	(69-7/32)		1758	(69-7/32)	
	WIDTH : W mm(inch) O.D.		1830	(72-3/64)		1830	(72-3/64)		2060	(81-7/64)	
	DEPTH : D mm(inch) O.D.		930	(36-39/64)		930	(36-39/64)		930	(36-39/64)	
PAC DIM	HEIGHT : H mm(inch) O.D.		-	-		-	-		-	-	
	WIDTH : W mm(inch) O.D.		-	-		-	-		-	-	
	DEPTH : D mm(inch) O.D.		-	-		-	-		-	-	
MASS	(NET) kg(lb) O.D.		590	(1301)		590	(1301)		618	(1362)	
	(GROSS) kg(lb) O.D.		614	(1354)		614	(1354)		644	(1420)	
LAYERS LIMIT (actually)			1 (2)			1 (2)			1 (2)		
Operation Condition		Cool O.D. (DBT)	-10°C ~ 43°C			-10°C ~ 43°C			-10°C ~ 43°C		
		Heat O.D. (WBT)	-25°C ~ 15°C			-25°C ~ 15°C			-25°C ~ 15°C		
PIPING	MAIN PIPE DIAMETER (NORMAL) mm (inch) (OVER 90m FOR ULTIMATE I.D.) mm (inch)		(Liquid) ø19.05 (3/4) (Gas) ø31.75 (1-1/4) *1 (Balance) ø6.35(1/4) (Liquid) ø22.22 (7/8) (Gas) ø38.1 (1-1/2)			(Liquid) ø19.05 (3/4) (Gas) ø31.75 (1-1/4) *1 (Balance) ø6.35(1/4) (Liquid) ø22.22 (7/8) (Gas) ø38.1 (1-1/2)			(Liquid) ø19.05 (3/4) (Gas) ø31.75 (1-1/4) *1 (Balance) ø6.35(1/4) (Liquid) ø22.22 (7/8) (Gas) ø38.1 (1-1/2)		
	CONNECT METHOD		brazing(Liquid) ,brazing(Gas) ,flared(Balance)			brazing(Liquid) ,brazing(Gas) ,flared(Balance)			brazing(Liquid) ,brazing(Gas) ,flared(Balance)		
	PIPE LENGTH RANGE m (ft)		7.5 ~ 1000	(24.6 ~ 3280.8)		7.5 ~ 1000	(24.6 ~ 3280.8)		7.5 ~ 1000	(24.6 ~ 3280.8)	
	I.D.&O.D. HEIGHT DIFFERENCE (O.D. upper / O.D. Lower) m (ft)		50 / 40	(164.0 / 131.2)		50 / 40	(164.0 / 131.2)		50 / 40	(164.0 / 131.2)	
	PIPE LENGTH FOR ADDITIONAL GAS m (ft)		0 ~	(0 ~) *2		0 ~	(0 ~) *2		0 ~	(0 ~) *2	

*1: Main Pipe Diameter size-up apply to O.D. to first branch pipe
*2: It's necessary to add Gas corresponding to total liquid pipe length, even if installation condition is shortest pipe length.
*3: Network Impedance shall be applicable for EUROPE and CHINA models.
*4: The annual consumption is calculated by multiplying the input power at 230V(400V) by an average of 500 hours per year in cooling mode.
*5: EER and COP classification is at 230V(400V) only in accordance with EU directive 2002/31/EC. (Scope:Cooling capacity less than 12kW)
* : In case it is necessary to indicate the air flow volume in (l/s), the value in (m^3/min.) shall be multiplied by 16.7 and rounded down the decimal point.
* : If the EUROVENT Certified models can be operated under the "extra-low" temperature condition, -7°C dry bulb and -8°C wet-bulb temperatures with rated voltage 230V shall be used.

4

1. Outdoor Unit

1-1. Specifications (Standard-COP mode)

Unit specifications (5)

OUTDOOR		MODEL	U-16ME1E81 / U-16ME1E81			U-18ME1E81 / U-16ME1E81			U-20ME1E81 / U-16ME1E81		
PERFORMANCE TEST CONDITION			EN14511			EN14511			EN14511		
POWER SUPPLY		ø, Hz	3ø 50Hz			3ø 50Hz			3ø 50Hz		
		V	380	400	415	380	400	415	380	400	415
COOLING	CAPACITY	kW	90.0	90.0	90.0	96.0	96.0	96.0	101.0	101.0	101.0
		BTU/h	307200	307200	307200	327600	327600	327600	344700	344700	344700
		kcal/h(Fri./h)	-	-	-	-	-	-	-	-	-
	CURRENT	A	43.70	41.50	40.00	46.30	44.00	42.40	50.00	47.50	45.80
	INPUT POWER	W	26.90k	26.90k	26.90k	28.00k	28.00k	28.00k	30.20k	30.20k	30.20k
	ANNUAL CONSUMPTION	W *4	-	-	-	-	-	-	-	-	-
	EER/EER CLASS	(W/W)*5/("A"~"G")	3.35	3.35	3.35	3.43	3.43	3.43	3.34	3.34	3.34
	EER	BTU/hW	-	-	-	-	-	-	-	-	-
	POWER FACTOR	%	94	94	94	92	92	92	92	92	92
	NOISE INDOOR (H/L)	dB-A	-			-			-		
		Power Level dB	-			-			-		
	NOISE OUTDOOR (H/L)	dB-A	65.0 / -			64.0 / -			65.5 / -		
		Power Level dB	79.5 / -			78.5 / -			80.0 / -		
HEATING	CAPACITY	kW	100.0	100.0	100.0	108.0	108.0	108.0	113.0	113.0	113.0
		BTU/h	341300	341300	341300	368600	368600	368600	385700	385700	385700
		kcal/h(Fri./h)	-	-	-	-	-	-	-	-	-
	CURRENT	A	42.10	40.00	38.50	46.30	44.00	42.40	48.80	46.40	44.70
	INPUT POWER	W	25.90k	25.90k	25.90k	28.00k	28.00k	28.00k	29.50k	29.50k	29.50k
	COP/COP CLASS	(W/W)*5/("A"~"G")	3.86	3.86	3.86	3.86	3.86	3.86	3.83	3.83	3.83
	COP	BTU/hW	-	-	-	-	-	-	-	-	-
	POWER FACTOR	%	93	93	94	92	92	92	92	92	92
	NOISE INDOOR (H/L)	dB-A	-			-			-		
		Power Level dB	-			-			-		
EXTRA LOW TEMP	CAPACITY(kW)/INPUT POWER(W)/COP		-			-			-		
	MAX CURRENT(A)/MAX INPUT POWER(W)		56.8 / 35.0k	56.8 / 36.8k	56.8 / 38.2k	58.9 / 35.6k	58.9 / 37.5k	58.9 / 38.9k	63.8 / 38.5k	63.8 / 40.6k	63.8 / 42.1k
STARTING CURRENT(A)/COMP OUTPUT(W)			100 / -	102 / -	105 / -	113 / -	114 / -	116 / -	120 / -	122 / -	123 / -
NETWORK IMPEDANCE (ΩMAX.) *3			-			-			-		
FM OUTPUT (I.D./O.D.) W			-	/	750×2	-	/	750×3	-	/	750×3
MOISTURE REMOVAL VOLUME		L/h(Pt/h)	-			-			-		
External static pressure		Pa {mmAq}	0 ~ 80		{0.00 ~ 8.16}	0 ~ 80		{0.00 ~ 8.16}	0 ~ 80		{0.00 ~ 8.16}
I.D. AIR FLOW	COOL	m^3/min (ft^3/min)	-			-			-		
	HEAT	m^3/min (ft^3/min)	-			-			-		
O.D. AIR FLOW		m^3/min (ft^3/min)	424		(14973)	456		(16103)	495		(17481)
REFRIGERANT TYPE, AMOUNT (O.D. Base / MAX) g(oz)			R410A	17.0k / 80.0k	(600 / 2822)	R410A	17.5k / 80.0k	(617 / 2822)	R410A	17.5k / 80.0k	(617 / 2822)
PROD DIM	HEIGHT : H mm(inch) O.D.		1758		(69-7/32)	1758		(69-7/32)	1758		(69-7/32)
	WIDTH : W mm(inch) O.D.		2060		(81-7/64)	2600		(102-23/64)	2600		(102-23/64)
	DEPTH : D mm(inch) O.D.		930		(36-39/64)	930		(36-39/64)	930		(36-39/64)
PACK DIM	HEIGHT : H mm(inch) O.D.		-		-	-		-	-		-
	WIDTH : W mm(inch) O.D.		-		-	-		-	-		-
	DEPTH : D mm(inch) O.D.		-		-	-		-	-		-
MASS	(NET) kg(lb) O.D.		618		(1362)	730		(1609)	730		(1609)
	(GROSS) kg(lb) O.D.		644		(1420)	762		(1680)	762		(1680)
LAYERS LIMIT (actually)			1 (2)			1 (2)			1 (2)		
Operation Condition		Cool O.D. (DBT)	-10°C ~ 43°C			-10°C ~ 43°C			-10°C ~ 43°C		
		Heat O.D. (WBT)	-25°C ~ 15°C			-25°C ~ 15°C			-25°C ~ 15°C		
PIPING	MAIN PIPE DIAMETER (NORMAL) mm (inch) (OVER 90m FOR ULTIMATE I.D.) mm (inch)		(Liquid) ø19.05 (3/4) (Gas) ø31.75 (1-1/4) *1 (Balance) ø6.35(1/4) (Liquid) ø22.22 (7/8) (Gas) ø38.1 (1-1/2)			(Liquid) ø19.05 (3/4) (Gas) ø31.75 (1-1/4) *1 (Balance) ø6.35(1/4) (Liquid) ø22.22 (7/8) (Gas) ø38.1 (1-1/2)			(Liquid) ø19.05 (3/4) (Gas) ø38.1 (1-1/2) *1 (Balance) ø6.35(1/4) (Liquid) ø22.22 (7/8) (Gas) ø41.28 (1-5/8)		
	CONNECT METHOD		brazing(Liquid) ,brazing(Gas) ,flared(Balance)			brazing(Liquid) ,brazing(Gas) ,flared(Balance)			brazing(Liquid) ,brazing(Gas) ,flared(Balance)		
	PIPE LENGTH RANGE m (ft)		7.5 ~ 1000		(24.6 ~ 3280.8)	7.5 ~ 1000		(24.6 ~ 3280.8)	7.5 ~ 1000		(24.6 ~ 3280.8)
	I.D.&O.D. HEIGHT DIFFERENCE (O.D. upper / O.D. Lower) m (ft)		50 / 40		(164.0 / 131.2)	50 / 40		(164.0 / 131.2)	50 / 40		(164.0 / 131.2)
	PIPE LENGTH FOR ADDITIONAL GAS m (ft)		0 ~		(0 ~) *2	0 ~		(0 ~) *2	0 ~		(0 ~) *2

*1: Main Pipe Diameter size-up apply to O.D. to first branch pipe
*2: It's necessary to add Gas corresponding to total liquid pipe length, even if installation condition is shortest pipe length.
*3: Network Impedance shall be applicable for EUROPE and CHINA models.
*4: The annual consumption is calculated by multiplying the input power at 230V(400V) by an average of 500 hours per year in cooling mode.
*5: EER and COP classification is at 230V(400V) only in accordance with EU directive 2002/31/EC. (Scope:Cooling capacity less than 12kW)
* : In case it is necessary to indicate the air flow volume in (l/s), the value in (m^3/min.) shall be multiplied by 16.7 and rounded down the decimal point.
* : If the EUROVENT Certified models can be operated under the "extra-low" temperature condition, -7°C dry bulb and -8°C wet-bulb temperatures with rated voltage 230V shall be used.

1. Outdoor Unit

1-1. Specifications (Standard-COP mode)

Unit specifications (6)

OUTDOOR		MODEL	U-20ME1E81 / U-18ME1E81			U-20ME1E81 / U-20ME1E81			U-16ME1E81 / U-14ME1E81 / U-12ME1E81		
PERFORMANCE TEST CONDITION			EN14511			EN14511			EN14511		
POWER SUPPLY		ø, Hz	3ø 50Hz			3ø 50Hz			3ø 50Hz		
		V	380	400	415	380	400	415	380	400	415
COOLING	CAPACITY	kW	107.0	107.0	107.0	113.0	113.0	113.0	118.0	118.0	118.0
		BTU/h	365200	365200	365200	385700	385700	385700	402700	402700	402700
		kcal/h(Fri./h)	-	-	-	-	-	-	-	-	-
	CURRENT	A	52.20	49.60	47.80	56.40	53.60	51.70	54.90	52.10	50.30
	INPUT POWER	W	31.10k	31.10k	31.10k	33.60k	33.60k	33.60k	33.60k	33.60k	33.60k
	ANNUAL CONSUMPTION	W *4	-	-	-	-	-	-	-	-	-
	EER/EER CLASS	(W/W)*5/("A"~"G")	3.44	3.44	3.44	3.36	3.36	3.36	3.51	3.51	3.51
	EER	BTU/hW	-	-	-	-	-	-	-	-	-
	POWER FACTOR	%	91	91	91	91	90	90	93	93	93
	NOISE INDOOR (H/L)	dB-A	-			-			-		
		Power Level dB	-			-			-		
	NOISE OUTDOOR (H/L)	dB-A	65.0 / -			66.0 / -			66.5 / -		
		Power Level dB	79.5 / -			80.5 / -			81.0 / -		
HEATING	CAPACITY	kW	119.0	119.0	119.0	127.0	127.0	127.0	132.0	132.0	132.0
		BTU/h	406100	406100	406100	433400	433400	433400	450500	450500	450500
		kcal/h(Fri./h)	-	-	-	-	-	-	-	-	-
	CURRENT	A	52.00	49.40	47.70	55.40	52.60	50.70	53.40	50.80	48.90
	INPUT POWER	W	31.00k	31.00k	31.00k	33.00k	33.00k	33.00k	32.70k	32.70k	32.70k
	COP/COP CLASS	(W/W)*5/("A"~"G")	3.84	3.84	3.84	3.85	3.85	3.85	4.04	4.04	4.04
	COP	BTU/hW	-	-	-	-	-	-	-	-	-
	POWER FACTOR	%	91	91	90	91	91	91	93	93	93
	NOISE INDOOR (H/L)	dB-A	-			-			-		
		Power Level dB	-			-			-		
EXTRA LOW TEMP	CAPACITY(kW)/INPUT POWER(W)/COP		-			-			-		
	MAX CURRENT(A)/MAX INPUT POWER(W)		65.9 / 39.3k	65.9 / 41.3k	65.9 / 42.9k	70.8 / 42.2k	70.8 / 44.4k	70.8 / 46.0k	71.4 / 43.7k	71.4 / 46.0k	71.4 / 47.7k
STARTING CURRENT(A)/COMP OUTPUT(W)			121 / -	123 / -	124 / -	125 / -	127 / -	128 / -	118 / -	119 / -	121 / -
NETWORK IMPEDANCE (ΩMAX.) *3			-			-			-		
FM OUTPUT (I.D./O.D.) W			-	/	750×4	-	/	750×4	-	/	750×3
MOISTURE REMOVAL VOLUME		L/h(Pt/h)	-			-			-		
External static pressure		Pa {mmAq}	0 ~ 80		{0.00 ~ 8.16}	0 ~ 80		{0.00 ~ 8.16}	0 ~ 80		{0.00 ~ 8.16}
I.D. AIR FLOW	COOL	m^3/min (ft^3/min)	-			-			-		
	HEAT	m^3/min (ft^3/min)	-			-			-		
O.D. AIR FLOW		m^3/min (ft^3/min)	527		(18611)	566		(19988)	614		(21683)
REFRIGERANT TYPE, AMOUNT (O.D. Base / MAX) g(oz)			R410A	18.0k / 80.0k	(635 / 2822)	R410A	18.0k / 80.0k	(635 / 2822)	R410A	23.8k / 105.0k	(840 / 3704)
PROD DIM	HEIGHT : H mm(inch) O.D.		1758		(69-7/32)	1758		(69-7/32)	1758		(69-7/32)
	WIDTH : W mm(inch) O.D.		3140		(123-5/8)	3140		(123-5/8)	2890		(113-25/32)
	DEPTH : D mm(inch) O.D.		930		(36-39/64)	930		(36-39/64)	930		(36-39/64)
PAC DIM	HEIGHT : H mm(inch) O.D.		-		-	-		-	-		-
	WIDTH : W mm(inch) O.D.		-		-	-		-	-		-
	DEPTH : D mm(inch) O.D.		-		-	-		-	-		-
MASS	(NET) kg(lb) O.D.		842		(1856)	842		(1856)	899		(1982)
	(GROSS) kg(lb) O.D.		880		(1940)	880		(1940)	936		(2064)
LAYERS LIMIT (actually)			1 (2)			1 (2)			1 (2)		
Operation Condition		Cool O.D. (DBT)	-10°C ~ 43°C			-10°C ~ 43°C			-10°C ~ 43°C		
		Heat O.D. (WBT)	-25°C ~ 15°C			-25°C ~ 15°C			-25°C ~ 15°C		
PIPING	MAIN PIPE DIAMETER (NORMAL) mm (inch) (OVER 90m FOR ULTIMATE I.D.) mm (inch)		(Liquid) ø19.05 (3/4) (Gas) ø38.1 (1-1/2) *1 (Balance) ø6.35(1/4) (Liquid) ø22.22 (7/8) (Gas) ø41.28 (1-5/8)			(Liquid) ø19.05 (3/4) (Gas) ø38.1 (1-1/2) *1 (Balance) ø6.35(1/4) (Liquid) ø22.22 (7/8) (Gas) ø41.28 (1-5/8)			(Liquid) ø19.05 (3/4) (Gas) ø38.1 (1-1/2) *1 (Balance) ø6.35(1/4) (Liquid) ø22.22 (7/8) (Gas) ø41.28 (1-5/8)		
	CONNECT METHOD		brazing(Liquid) ,brazing(Gas)			brazing(Liquid) ,brazing(Gas)			brazing(Liquid) ,brazing(Gas)		
	PIPE LENGTH RANGE m (ft)		7.5 ~ 1000		(24.6 ~ 3280.8)	7.5 ~ 1000		(24.6 ~ 3280.8)	7.5 ~ 1000		(24.6 ~ 3280.8)
	I.D.&O.D. HEIGHT DIFFERENCE (O.D. upper / O.D. Lower) m (ft)		50 / 40		(164.0 / 131.2)	50 / 40		(164.0 / 131.2)	50 / 40		(164.0 / 131.2)
	PIPE LENGTH FOR ADDITIONAL GAS m (ft)		0 ~		(0 ~) *2	0 ~		(0 ~) *2	0 ~		(0 ~) *2

*1: Main Pipe Diameter size-up apply to O.D. to first branch pipe
*2: It's necessary to add Gas corresponding to total liquid pipe length, even if installation condition is shortest pipe length.
*3: Network Impedance shall be applicable for EUROPE and CHINA models.
*4: The annual consumption is calculated by multiplying the input power at 230V(400V) by an average of 500 hours per year in cooling mode.
*5: EER and COP classification is at 230V(400V) only in accordance with EU directive 2002/31/EC. (Scope:Cooling capacity less than 12kW)
* : In case it is necessary to indicate the air flow volume in (l/s), the value in (m^3/min.) shall be multiplied by 16.7 and rounded down the decimal point.
* : If the EUROVENT Certified models can be operated under the "extra-low" temperature condition, -7°C dry bulb and -8°C wet-bulb temperatures with rated voltage 230V shall be used.

4

1. Outdoor Unit

1-1. Specifications (Standard-COP mode)

Unit specifications (7)

OUTDOOR		MODEL	U-16ME1E81 / U-16ME1E81 / U-12ME1E81			U-16ME1E81 / U-16ME1E81 / U-14ME1E81			U-16ME1E81 / U-16ME1E81 / U-16ME1E81		
PERFORMANCE TEST CONDITION			EN14511			EN14511			EN14511		
POWER SUPPLY		ø, Hz	3ø 50Hz			3ø 50Hz			3ø 50Hz		
		V	380	400	415	380	400	415	380	400	415
COOLING	CAPACITY	kW	124.0	124.0	124.0	130.0	130.0	130.0	135.0	135.0	135.0
		BTU/h	423200	423200	423200	443700	443700	443700	460800	460800	460800
		kcal/h(Fri./h)	-	-	-	-	-	-	-	-	-
	CURRENT	A	59.10	56.20	54.20	61.60	58.50	56.40	65.50	62.20	60.00
	INPUT POWER	W	36.20k	36.20k	36.20k	37.90k	37.90k	37.90k	40.30k	40.30k	40.30k
	ANNUAL CONSUMPTION	W *4	-	-	-	-	-	-	-	-	-
	EER/EER CLASS	(W/W)*5/("A"~"G")	3.43	3.43	3.43	3.43	3.43	3.43	3.35	3.35	3.35
	EER	BTU/hW	-	-	-	-	-	-	-	-	-
	POWER FACTOR	%	93	93	93	93	94	93	93	94	93
	NOISE INDOOR (H/L)	dB-A	-			-			-		
		Power Level dB	-			-			-		
	NOISE OUTDOOR (H/L)	dB-A	66.5 / -			67.0 / -			67.0 / -		
		Power Level dB	81.0 / -			81.5 / -			81.5 / -		
HEATING	CAPACITY	kW	138.0	138.0	138.0	145.0	145.0	145.0	150.0	150.0	150.0
		BTU/h	471000	471000	471000	494900	494900	494900	511900	511900	511900
		kcal/h(Fri./h)	-	-	-	-	-	-	-	-	-
	CURRENT	A	57.50	54.60	52.70	59.50	56.50	54.50	63.20	60.10	57.90
	INPUT POWER	W	35.20k	35.20k	35.20k	36.60k	36.60k	36.60k	38.90k	38.90k	38.90k
	COP/COP CLASS	(W/W)*5/("A"~"G")	3.92	3.92	3.92	3.96	3.96	3.96	3.86	3.86	3.86
	COP	BTU/hW	-	-	-	-	-	-	-	-	-
	POWER FACTOR	%	93	93	93	93	94	93	94	93	93
	NOISE INDOOR (H/L)	dB-A	-			-			-		
		Power Level dB	-			-			-		
EXTRA LOW TEMP		CAPACITY(kW)/INPUT POWER(W)/COP	-			-			-		
		MAX CURRENT(A)/MAX INPUT POWER(W)	76.5 / 46.9k	76.5 / 49.3k	76.5 / 51.1k	80.1 / 49.3k	80.1 / 51.9k	80.1 / 53.8k	85.2 / 52.4k	85.2 / 55.2k	85.2 / 57.2k
STARTING CURRENT(A)/COMP OUTPUT(W)			122 / -	122 / -	125 / -	118 / -	119 / -	121 / -	122 / -	122 / -	125 / -
NETWORK IMPEDANCE (ΩMAX.) *3			-			-			-		
FM OUTPUT (I.D./O.D.) W			-	/	750×3	-	/	750×3	-	/	750×3
MOISTURE REMOVAL VOLUME		L/h(Pt/h)	-			-			-		
External static pressure		Pa {mmAq}	0 ~ 80		{0.00 ~ 8.16}	0 ~ 80		{0.00 ~ 8.16}	0 ~ 80		{0.00 ~ 8.16}
I.D. AIR FLOW	COOL	m^3/min (ft^3/min)	-			-			-		
	HEAT	m^3/min (ft^3/min)	-			-			-		
O.D. AIR FLOW		m^3/min (ft^3/min)	614		(21683)	636		(22460)	636		(22460)
REFRIGERANT TYPE, AMOUNT (O.D. Base / MAX) g(oz)			R410A	23.8k / 105.0k	(840 / 3704)	R410A	25.5k / 105.0k	(899 / 3704)	R410A	25.5k / 105.0k	(899 / 3704)
PROD DIM	HEIGHT : H mm(inch) O.D.		1758		(69-7/32)	1758		(69-7/32)	1758		(69-7/32)
	WIDTH : W mm(inch) O.D.		2890		(113-25/32)	3120		(122-53/64)	3120		(122-53/64)
	DEPTH : D mm(inch) O.D.		930		(36-39/64)	930		(36-39/64)	930		(36-39/64)
PAC DIM	HEIGHT : H mm(inch) O.D.		-		-	-		-	-		-
	WIDTH : W mm(inch) O.D.		-		-	-		-	-		-
	DEPTH : D mm(inch) O.D.		-		-	-		-	-		-
MASS	(NET) kg(lb) O.D.		899		(1982)	927		(2044)	927		(2044)
	(GROSS) kg(lb) O.D.		936		(2064)	966		(2130)	966		(2130)
LAYERS LIMIT (actually)			1 (2)			1 (2)			1 (2)		
Operation Condition		Cool O.D. (DBT)	-10°C ~ 43°C			-10°C ~ 43°C			-10°C ~ 43°C		
		Heat O.D. (WBT)	-25°C ~ 15°C			-25°C ~ 15°C			-25°C ~ 15°C		
PIPING	MAIN PIPE DIAMETER (NORMAL) mm (inch) (OVER 90m FOR ULTIMATE I.D.) mm (inch)		(Liquid) ø19.05 (3/4) (Gas) ø38.1 (1-1/2) *1 (Balance) ø6.35(1/4) (Liquid) ø22.22 (7/8) (Gas) ø41.28 (1-5/8)			(Liquid) ø19.05 (3/4) (Gas) ø38.1 (1-1/2) *1 (Balance) ø6.35(1/4) (Liquid) ø22.22 (7/8) (Gas) ø41.28 (1-5/8)			(Liquid) ø19.05 (3/4) (Gas) ø38.1 (1-1/2) *1 (Balance) ø6.35(1/4) (Liquid) ø22.22 (7/8) (Gas) ø41.28 (1-5/8)		
	CONNECT METHOD		brazing(Liquid) ,brazing(Gas) ,flared(Balance)			brazing(Liquid) ,brazing(Gas) ,flared(Balance)			brazing(Liquid) ,brazing(Gas) ,flared(Balance)		
	PIPE LENGTH RANGE m (ft)		7.5 ~ 1000		(24.6 ~ 3280.8)	7.5 ~ 1000		(24.6 ~ 3280.8)	7.5 ~ 1000		(24.6 ~ 3280.8)
	I.D.&O.D. HEIGHT DIFFERENCE (O.D. upper / O.D. Lower) m (ft)		50 / 40		(164.0 / 131.2)	50 / 40		(164.0 / 131.2)	50 / 40		(164.0 / 131.2)
	PIPE LENGTH FOR ADDITIONAL GAS m (ft)		0 ~		(0 ~) *2	0 ~		(0 ~) *2	0 ~		(0 ~) *2

*1: Main Pipe Diameter size-up apply to O.D. to first branch pipe
*2: It's necessary to add Gas corresponding to total liquid pipe length, even if installation condition is shortest pipe length.
*3: Network Impedance shall be applicable for EUROPE and CHINA models.
*4: The annual consumption is calculated by multiplying the input power at 230V(400V) by an average of 500 hours per year in cooling mode.
*5: EER and COP classification is at 230V(400V) only in accordance with EU directive 2002/31/EC. (Scope:Cooling capacity less than 12kW)
* : In case it is necessary to indicate the air flow volume in (l/s), the value in (m^3/min.) shall be multiplied by 16.7 and rounded down the decimal point.
* : If the EUROVENT Certified models can be operated under the "extra-low" temperature condition, -7°C dry bulb and -8°C wet-bulb temperatures with rated voltage 230V shall be used.

1. Outdoor Unit

1-1. Specifications (Standard-COP mode)

Unit specifications (8)

OUTDOOR		MODEL	U-18ME1E81 / U-16ME1E81 / U-16ME1E81			U-20ME1E81 / U-16ME1E81 / U-16ME1E81			U-20ME1E81 / U-18ME1E81 / U-16ME1E81		
PERFORMANCE TEST CONDITION			EN14511			EN14511			EN14511		
POWER SUPPLY		ø, Hz	3ø 50Hz			3ø 50Hz			3ø 50Hz		
		V	380	400	415	380	400	415	380	400	415
COOLING	CAPACITY	kW	140.0	140.0	140.0	145.0	145.0	145.0	151.0	151.0	151.0
		BTU/h	477800	477800	477800	494900	494900	494900	515400	515400	515400
		kcal/h(Fri./h)	-	-	-	-	-	-	-	-	-
	CURRENT	A	67.60	64.20	61.90	71.30	67.70	65.30	74.00	70.30	67.70
	INPUT POWER	W	41.10k	41.10k	41.10k	43.30k	43.30k	43.30k	44.50k	44.50k	44.50k
	ANNUAL CONSUMPTION	W *4	-	-	-	-	-	-	-	-	-
	EER/EER CLASS	(W/W)*5/("A"~"G")	3.41	3.41	3.41	3.35	3.35	3.35	3.39	3.39	3.39
	EER	BTU/hW	-	-	-	-	-	-	-	-	-
	POWER FACTOR	%	92	92	92	92	92	92	91	91	91
	NOISE INDOOR (H/L)	dB-A	-			-			-		
		Power Level dB	-			-			-		
	NOISE OUTDOOR (H/L)	dB-A	66.0 / -			67.0 / -			66.5 / -		
		Power Level dB	80.5 / -			81.5 / -			81.0 / -		
HEATING	CAPACITY	kW	155.0	155.0	155.0	160.0	160.0	160.0	169.0	169.0	169.0
		BTU/h	529000	529000	529000	546100	546100	546100	576800	576800	576800
		kcal/h(Fri./h)	-	-	-	-	-	-	-	-	-
	CURRENT	A	66.10	62.80	60.50	68.60	65.20	62.90	73.00	69.30	66.80
	INPUT POWER	W	40.20k	40.20k	40.20k	41.70k	41.70k	41.70k	43.90k	43.90k	43.90k
	COP/COP CLASS	(W/W)*5/("A"~"G")	3.86	3.86	3.86	3.84	3.84	3.84	3.85	3.85	3.85
	COP	BTU/hW	-	-	-	-	-	-	-	-	-
	POWER FACTOR	%	92	92	92	92	92	92	91	91	91
	NOISE INDOOR (H/L)	dB-A	-			-			-		
		Power Level dB	-			-			-		
EXTRA LOW TEMP	CAPACITY(kW)/INPUT POWER(W)/COP		-			-			-		
	MAX CURRENT(A)/MAX INPUT POWER(W)		87.3 / 53.1k	87.3 / 55.9k	87.3 / 58.0k	92.2 / 56.0k	92.2 / 59.0k	92.2 / 61.1k	94.3 / 56.7k	94.3 / 59.7k	94.3 / 62.0k
STARTING CURRENT(A)/COMP OUTPUT(W)			135 / -	134 / -	136 / -	142 / -	142 / -	143 / -	143 / -	144 / -	144 / -
NETWORK IMPEDANCE (ΩMAX.) *3			-			-			-		
FM OUTPUT (I.D./O.D.) W			-	/	750×4	-	/	750×4	-	/	750×5
MOISTURE REMOVAL VOLUME		L/h(Pt/h)	-			-			-		
External static pressure		Pa {mmAq}	0 ~ 80		{0.00 ~ 8.16}	0 ~ 80		{0.00 ~ 8.16}	0 ~ 80		{0.00 ~ 8.16}
I.D. AIR FLOW	COOL	m^3/min (ft^3/min)	-			-			-		
	HEAT	m^3/min (ft^3/min)	-			-			-		
O.D. AIR FLOW		m^3/min (ft^3/min)	668		(23590)	707		(24967)	739		(26098)
REFRIGERANT TYPE, AMOUNT (O.D. Base / MAX) g(oz)			R410A	26.0k / 105.0k	(917 / 3704)	R410A	26.0k / 105.0k	(917 / 3704)	R410A	26.5k / 105.0k	(935 / 3704)
PRO DIM	HEIGHT : H mm(inch) O.D.		1758		(69-7/32)	1758		(69-7/32)	1758		(69-7/32)
	WIDTH : W mm(inch) O.D.		3660		(144-3/32)	3660		(144-3/32)	4200		(165-23/64)
	DEPTH : D mm(inch) O.D.		930		(36-39/64)	930		(36-39/64)	930		(36-39/64)
PAC DIM	HEIGHT : H mm(inch) O.D.		-		-	-		-	-		-
	WIDTH : W mm(inch) O.D.		-		-	-		-	-		-
	DEPTH : D mm(inch) O.D.		-		-	-		-	-		-
MASS	(NET) kg(lb) O.D.		1039		(2291)	1039		(2291)	1151		(2538)
	(GROSS) kg(lb) O.D.		1084		(2390)	1084		(2390)	1202		(2650)
LAYERS LIMIT (actually)			1 (2)			1 (2)			1 (2)		
Operation Condition		Cool O.D. (DBT)	-10°C ~ 43°C			-10°C ~ 43°C			-10°C ~ 43°C		
		Heat O.D. (WBT)	-25°C ~ 15°C			-25°C ~ 15°C			-25°C ~ 15°C		
PIPING	MAIN PIPE DIAMETER (NORMAL) mm (inch) (OVER 90m FOR ULTIMATE I.D.) mm (inch)		(Liquid) ø19.05 (3/4) (Gas) ø38.1 (1-1/2) *1 (Balance) ø6.35(1/4) (Liquid) ø22.22 (7/8) (Gas) ø41.28 (1-5/8)			(Liquid) ø19.05 (3/4) (Gas) ø38.1 (1-1/2) *1 (Balance) ø6.35(1/4) (Liquid) ø22.22 (7/8) (Gas) ø41.28 (1-5/8)			(Liquid) ø19.05 (3/4) (Gas) ø38.1 (1-1/2) *1 (Balance) ø6.35(1/4) (Liquid) ø22.22 (7/8) (Gas) ø41.28 (1-5/8)		
	CONNECT METHOD		brazing(Liquid) ,brazing(Gas) ,flared(Balance)			brazing(Liquid) ,brazing(Gas) ,flared(Balance)			brazing(Liquid) ,brazing(Gas) ,flared(Balance)		
	PIPE LENGTH RANGE m (ft)		7.5 ~ 1000		(24.6 ~ 3280.8)	7.5 ~ 1000		(24.6 ~ 3280.8)	7.5 ~ 1000		(24.6 ~ 3280.8)
	I.D.&O.D. HEIGHT DIFFERENCE (O.D. upper / O.D. Lower) m (ft)		50 / 40		(164.0 / 131.2)	50 / 40		(164.0 / 131.2)	50 / 40		(164.0 / 131.2)
	PIPE LENGTH FOR ADDITIONAL GAS m (ft)		0 ~		(0 ~) *2	0 ~		(0 ~) *2	0 ~		(0 ~) *2

*1: Main Pipe Diameter size-up apply to O.D. to first branch pipe
*2: It's necessary to add Gas corresponding to total liquid pipe length, even if installation condition is shortest pipe length.
*3: Network Impedance shall be applicable for EUROPE and CHINA models.
*4: The annual consumption is calculated by multiplying the input power at 230V(400V) by an average of 500 hours per year in cooling mode.
*5: EER and COP classification is at 230V(400V) only in accordance with EU directive 2002/31/EC. (Scope:Cooling capacity less than 12kW)
* : In case it is necessary to indicate the air flow volume in (l/s), the value in (m^3/min.) shall be multiplied by 16.7 and rounded down the decimal point.
* : If the EUROVENT Certified models can be operated under the "extra-low" temperature condition, -7°C dry bulb and -8°C wet-bulb temperatures with rated voltage 230V shall be used.

4

1. Outdoor Unit

1-1. Specifications (Standard-COP mode)

Unit specifications (9)

OUTDOOR		MODEL	U-20ME1E81 / U-18ME1E81 / U-18ME1E81			U-20ME1E81 / U-20ME1E81 / U-18ME1E81			U-20ME1E81 / U-20ME1E81 / U-20ME1E81		
PERFORMANCE TEST CONDITION			EN14511			EN14511			EN14511		
POWER SUPPLY		ø, Hz	3ø 50Hz			3ø 50Hz			3ø 50Hz		
		V	380	400	415	380	400	415	380	400	415
COOLING	CAPACITY	kW	156.0	156.0	156.0	162.0	162.0	162.0	168.0	168.0	168.0
		BTU/h	532400	532400	532400	552900	552900	552900	573400	573400	573400
		kcal/h(Fri./h)	-	-	-	-	-	-	-	-	-
	CURRENT	A	76.20	72.40	69.80	80.40	76.40	73.60	84.60	80.40	77.50
	INPUT POWER	W	45.40k	45.40k	45.40k	47.90k	47.90k	47.90k	50.40k	50.40k	50.40k
	ANNUAL CONSUMPTION	W *4	-	-	-	-	-	-	-	-	-
	EER/EER CLASS	(W/W)*5/("A"~"G")	3.44	3.44	3.44	3.38	3.38	3.38	3.33	3.33	3.33
	EER	BTU/hW	-	-	-	-	-	-	-	-	-
	POWER FACTOR	%	91	91	90	91	90	91	91	90	90
	NOISE INDOOR (H/L)	dB-A	-			-			-		
		Power Level dB	-			-			-		
	NOISE OUTDOOR (H/L)	dB-A	66.0 / -			67.0 / -			68.0 / -		
		Power Level dB	80.5 / -			81.5 / -			82.5 / -		
HEATING	CAPACITY	kW	175.0	175.0	175.0	182.0	182.0	182.0	189.0	189.0	189.0
		BTU/h	597300	597300	597300	621200	621200	621200	645100	645100	645100
		kcal/h(Fri./h)	-	-	-	-	-	-	-	-	-
	CURRENT	A	76.20	72.40	69.80	79.70	75.80	73.00	83.30	79.10	76.20
	INPUT POWER	W	45.40k	45.40k	45.40k	47.50k	47.50k	47.50k	49.60k	49.60k	49.60k
	COP/COP CLASS	(W/W)*5/("A"~"G")	3.85	3.85	3.85	3.83	3.83	3.83	3.81	3.81	3.81
	COP	BTU/hW	-	-	-	-	-	-	-	-	-
	POWER FACTOR	%	91	91	90	91	90	91	90	91	91
	NOISE INDOOR (H/L)	dB-A	-			-			-		
		Power Level dB	-			-			-		
EXTRA LOW TEMP	CAPACITY(kW)/INPUT POWER(W)/COP		-			-			-		
	MAX CURRENT(A)/MAX INPUT POWER(W)		96.4 / 57.4k	96.4 / 60.4k	96.4 / 62.7k	101.3 / 60.4k	101.3 / 63.5k	101.3 / 65.9k	106.2 / 63.3k	106.2 / 66.6k	106.2 / 69.1k
STARTING CURRENT(A)/COMP OUTPUT(W)			145 / -	146 / -	146 / -	148 / -	149 / -	149 / -	152 / -	153 / -	153 / -
NETWORK IMPEDANCE (ΩMAX.) *3			-			-			-		
FM OUTPUT (I.D./O.D.) W			-	/	750×6	-	/	750×6	-	/	750×6
MOISTURE REMOVAL VOLUME		L/h(Pt/h)	-			-			-		
External static pressure		Pa {mmAq}	0 ~ 80		{0.00 ~ 8.16}	0 ~ 80		{0.00 ~ 8.16}	0 ~ 80		{0.00 ~ 8.16}
I.D. AIR FLOW	COOL	m^3/min (ft^3/min)	-			-			-		
	HEAT	m^3/min (ft^3/min)	-			-			-		
O.D. AIR FLOW		m^3/min (ft^3/min)	771		(27228)	810		(28605)	849		(29982)
REFRIGERANT TYPE, AMOUNT (O.D. Base / MAX) g(oz)			R410A	27.0k / 105.0k	(952 / 3704)	R410A	27.0k / 105.0k	(952 / 3704)	R410A	27.0k / 105.0k	(952 / 3704)
PROD DIM	HEIGHT : H mm(inch) O.D.		1758		(69-7/32)	1758		(69-7/32)	1758		(69-7/32)
	WIDTH : W mm(inch) O.D.		4740		(186-39/64)	4740		(186-39/64)	4740		(186-39/64)
	DEPTH : D mm(inch) O.D.		930		(36-39/64)	930		(36-39/64)	930		(36-39/64)
PACK DIM	HEIGHT : H mm(inch) O.D.		-		-	-		-	-		-
	WIDTH : W mm(inch) O.D.		-		-	-		-	-		-
	DEPTH : D mm(inch) O.D.		-		-	-		-	-		-
MASS	(NET) kg(lb) O.D.		1263		(2784)	1263		(2784)	1263		(2784)
	(GROSS) kg(lb) O.D.		1320		(2910)	1320		(2910)	1320		(2910)
LAYERS LIMIT (actually)			1 (2)			1 (2)			1 (2)		
Operation Condition		Cool O.D. (DBT)	-10°C ~ 43°C			-10°C ~ 43°C			-10°C ~ 43°C		
		Heat O.D. (WBT)	-25°C ~ 15°C			-25°C ~ 15°C			-25°C ~ 15°C		
PIPING	MAIN PIPE DIAMETER (NORMAL) mm (inch) (OVER 90m FOR ULTIMATE I.D.) mm (inch)		(Liquid) ø19.05 (3/4) (Gas) ø38.1 (1-1/2) *1 (Balance) ø6.35(1/4) (Liquid) ø22.22 (7/8) (Gas) ø41.28 (1-5/8)			(Liquid) ø19.05 (3/4) (Gas) ø38.1 (1-1/2) *1 (Balance) ø6.35(1/4) (Liquid) ø22.22 (7/8) (Gas) ø41.28 (1-5/8)			(Liquid) ø19.05 (3/4) (Gas) ø38.1 (1-1/2) *1 (Balance) ø6.35(1/4) (Liquid) ø22.22 (7/8) (Gas) ø41.28 (1-5/8)		
	CONNECT METHOD		brazing(Liquid) ,brazing(Gas) ,flared(Balance)			brazing(Liquid) ,brazing(Gas) ,flared(Balance)			brazing(Liquid) ,brazing(Gas) ,flared(Balance)		
	PIPE LENGTH RANGE m (ft)		7.5 ~ 1000		(24.6 ~ 3280.8)	7.5 ~ 1000		(24.6 ~ 3280.8)	7.5 ~ 1000		(24.6 ~ 3280.8)
	I.D.&O.D. HEIGHT DIFFERENCE (O.D. upper / O.D. Lower) m (ft)		50 / 40		(164.0 / 131.2)	50 / 40		(164.0 / 131.2)	50 / 40		(164.0 / 131.2)
	PIPE LENGTH FOR ADDITIONAL GAS m (ft)		0 ~		(0 ~) *2	0 ~		(0 ~) *2	0 ~		(0 ~) *2

*1: Main Pipe Diameter size-up apply to O.D. to first branch pipe
*2: It's necessary to add Gas corresponding to total liquid pipe length, even if installation condition is shortest pipe length.
*3: Network Impedance shall be applicable for EUROPE and CHINA models.
*4: The annual consumption is calculated by multiplying the input power at 230V(400V) by an average of 500 hours per year in cooling mode.
*5: EER and COP classification is at 230V(400V) only in accordance with EU directive 2002/31/EC. (Scope:Cooling capacity less than 12kW)
* : In case it is necessary to indicate the air flow volume in (l/s), the value in (m^3/min.) shall be multiplied by 16.7 and rounded down the decimal point.
* : If the EUROVENT Certified models can be operated under the "extra-low" temperature condition, -7°C dry bulb and -8°C wet-bulb temperatures with rated voltage 230V shall be used.

1. Outdoor Unit

1-2 Dimensional Data

U-8ME1E81, U-10ME1E81, U-12ME1E81

unit: mm

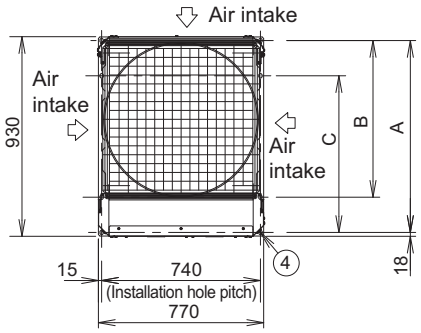

Top view

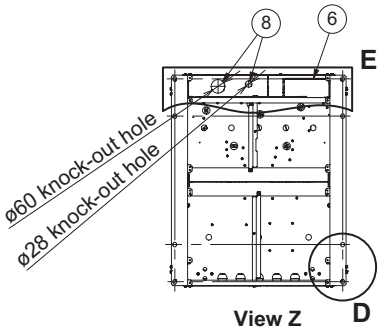

View Z

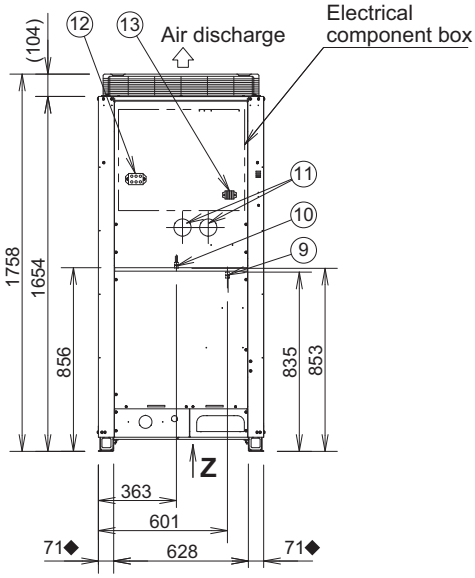

Front view

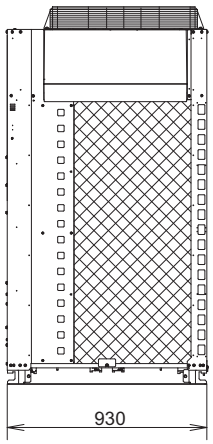

Side view

Installation hole
8 - 15 x 21 elongated hole

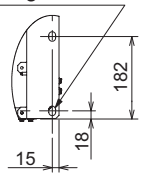

Enlarged view D

◆ Installation fixing bracket
Installation side

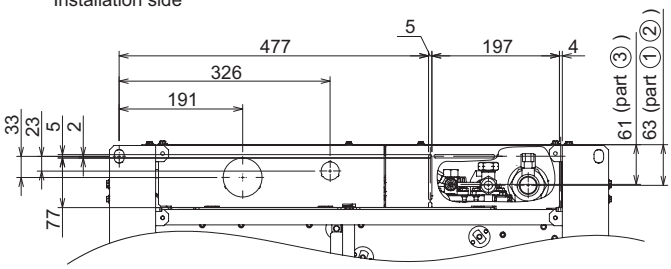

Enlarged view E

- According to the installation site, you may choose the setting position in the depth direction of the anchor bolt from "A", "B" or "C".
  A : 894 (Installation hole pitch) * The tubing is routed out from the front.
  B : 730 (Installation hole pitch) * The tubing is routed out from the bottom.
  C : 730 (Installation hole pitch)

	Types of unit		8HP	10HP	12HP
①	Refrigerant tubing (gas tube)	brazed connection	ø19.05	ø22.22	ø25.4
②	Refrigerant tubing (liquid tube)	flared connection	ø9.52	ø9.52	ø12.7
③	Refrigerant tubing (balance tube)	flared connection	ø6.35	ø6.35	ø6.35
④	Installation holes(8-15x21 elongated holes), anchor bolts M12 or larger				
⑤	Refrigerant tubing port (front: knock-out hole)				
⑥	Refrigerant tubing port (bottom: slit hole)				
⑦	Electrical wiring port (front: ø60, ø28 knock-out hole - for conduit connection)				
⑧	Electrical wiring port (bottom: ø60, ø28 knock-out hole - for conduit connection)				
⑨	Pressure outlet port (for high pressure: ø7.94 Schrader-type connection)				
⑩	Pressure outlet port (for low pressure: ø7.94 Schrader-type connection)				
⑪	Knock-out hole for connecting pressure gauge (optional)				
⑫	Terminal plate				
⑬	Terminal plate for inter-unit control wiring and/or inter-outdoor unit control wiring				

Position of refrigerant tube connection

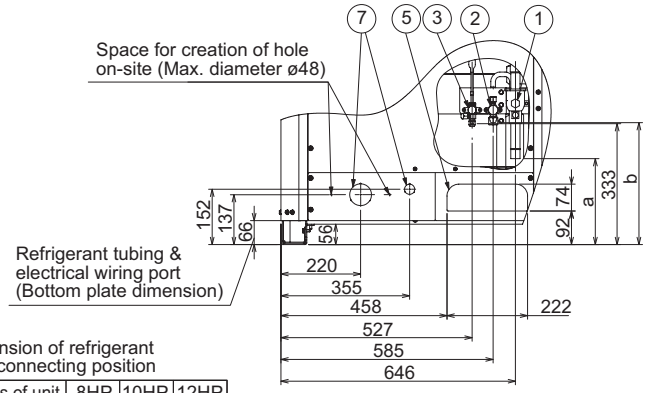

Dimension of refrigerant tube connecting position

Types of unit	8HP	10HP	12HP
a	278	237	237
b	347	347	336

1. Outdoor Unit

U-14ME1E81, U-16ME1E81

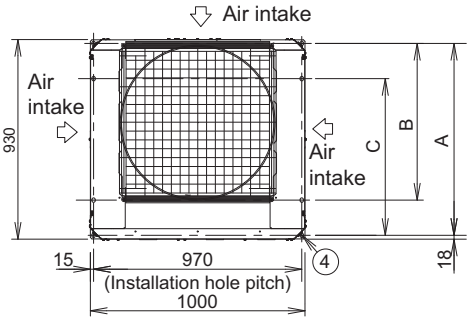

Top view

unit: mm

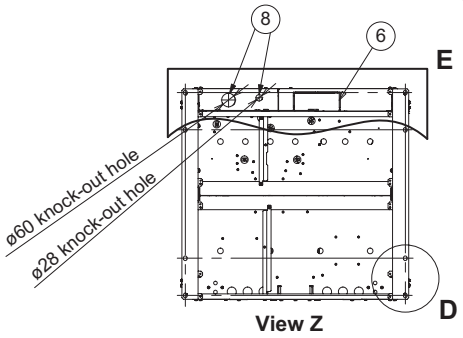

View Z

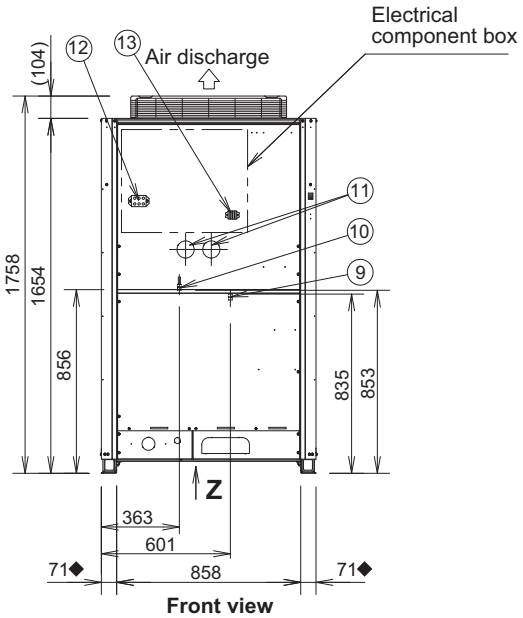

Front view

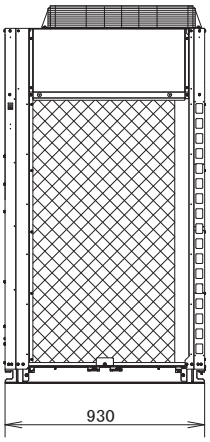

Side view

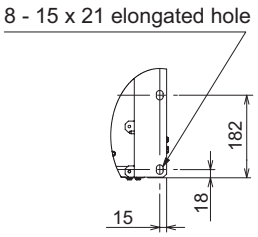

Enlarged view D

◆ Installation fixing bracket
Installation side

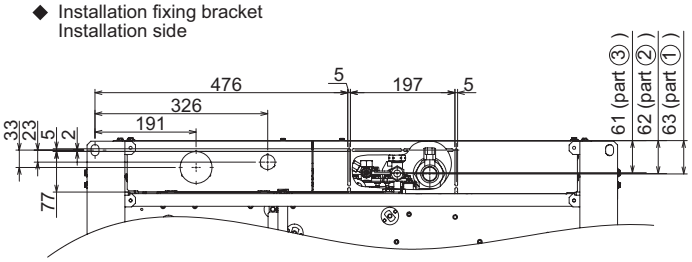

Enlarged view E

- According to the installation site, you may choose the setting position in the depth direction of the anchor bolt from "A", "B" or "C".
  A : 894 (Installation hole pitch) * The tubing is routed out from the front.
  B : 730 (Installation hole pitch) * The tubing is routed out from the bottom.
  C : 730 (Installation hole pitch)

Position of refrigerant tube connection

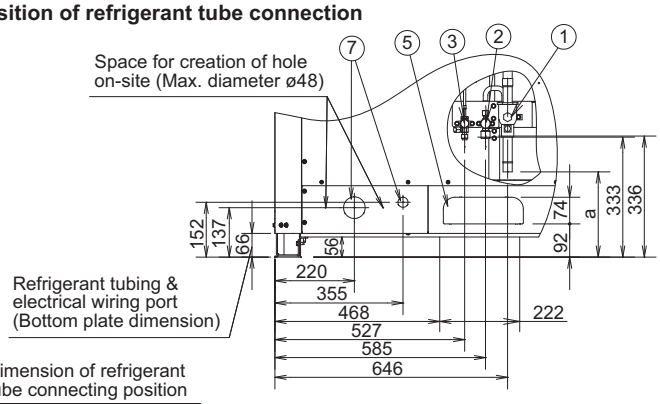

Dimension of refrigerant tube connecting position

Types of unit	14HP	16HP
a	234	157

- 16hp unit dimensions shows a case using the connection tubing supplied with the unit.

	Types of unit		14HP	16HP
①	Refrigerant tubing (gas tube)	brazed connection	ø25.4	ø28.58
②	Refrigerant tubing (liquid tube)	flared connection	ø12.7	ø12.7
③	Refrigerant tubing (balance tube)	flared connection	ø6.35	ø6.35
④	Installation holes(8-15x21 elongated holes), anchor bolts M12 or larger			
⑤	Refrigerant tubing port (front: knock-out hole and slit)			
⑥	Refrigerant tubing port (bottom: slit hole)			
⑦	Electrical wiring port (front: ø60, ø28 knock-out hole - for conduit connection)			
⑧	Electrical wiring port (bottom: ø60, ø28 knock-out hole - for conduit connection)			
⑨	Pressure outlet port (for high pressure: ø7.94 Schrader-type connection)			
⑩	Pressure outlet port (for low pressure: ø7.94 Schrader-type connection)			
⑪	Knock-out hole for connecting pressure gauge (optional)			
⑫	Terminal plate			
⑬	Terminal plate for inter-unit control wiring and/or inter-outdoor unit control wiring			

1. Outdoor Unit

U-18ME1E81, U-20ME1E81

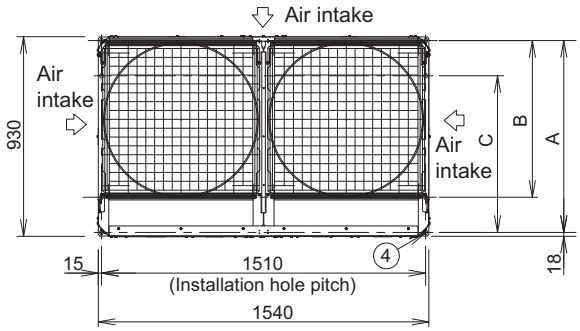

Top view

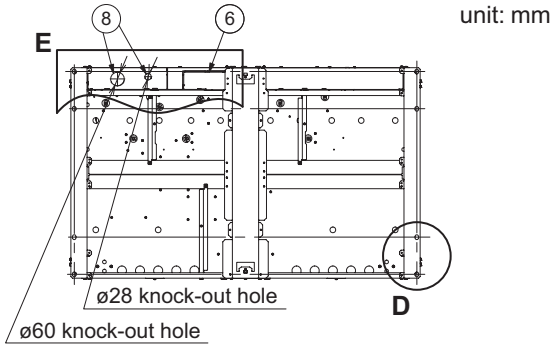

unit: mm

Z view

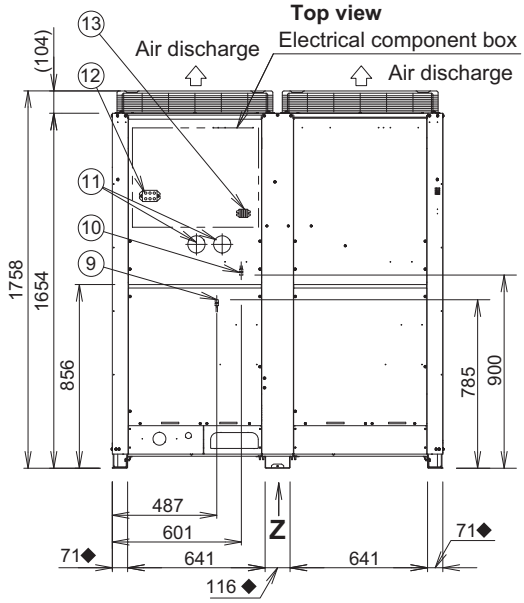

Front view

◆ Installation fixing bracket Installation side

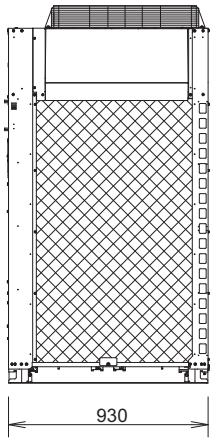

Side view

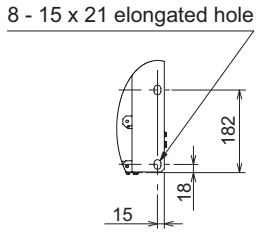

Enlarged view D

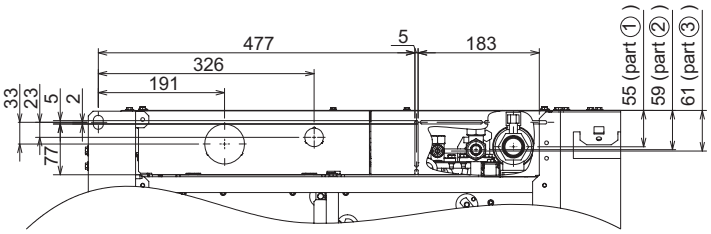

Enlarged view E

- According to the installation site, you may choose the setting position in the depth direction of the anchor bolt from "A", "B" or "C".
  A : 894 (Installation hole pitch) * The tubing is routed out from the front.
  B : 730 (Installation hole pitch) * The tubing is routed out from the bottom.
  C : 730 (Installation hole pitch)

Position of refrigerant tube connection

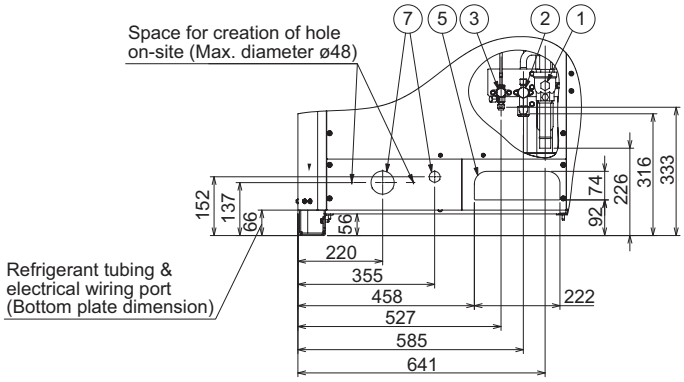

	Types of unit		18HP	20HP
①	Refrigerant tubing (gas tube)	brazed connection	ø28.58	ø28.58
②	Refrigerant tubing (liquid tube)	flared connection	ø15.88	ø15.88
③	Refrigerant tubing (balance tube)	flared connection	ø6.35	ø6.35
④	Installation holes(8-15x21 elongated holes), anchor bolts M12 or larger			
⑤	Refrigerant tubing port (front: knock-out hole and slit)			
⑥	Refrigerant tubing port (bottom: slit hole)			
⑦	Electrical wiring port (front: ø60, ø28 knock-out hole - for conduit connection)			
⑧	Electrical wiring port (bottom: ø60, ø28 knock-out hole - for conduit connection)			
⑨	Pressure outlet port (for high pressure: ø7.94 Schrader-type connection)			
⑩	Pressure outlet port (for low pressure: ø7.94 Schrader-type connection)			
⑪	Knock-out hole for connecting pressure gauge (optional)			
⑫	Terminal plate			
⑬	Terminal plate for inter-unit control wiring and/or inter-outdoor unit control wiring			

1. Outdoor Unit

1-3. Multiple Unit Installation Example (Standard-COP mode)

● Diagrams for 22hp ~ 28hp

Unit: mm

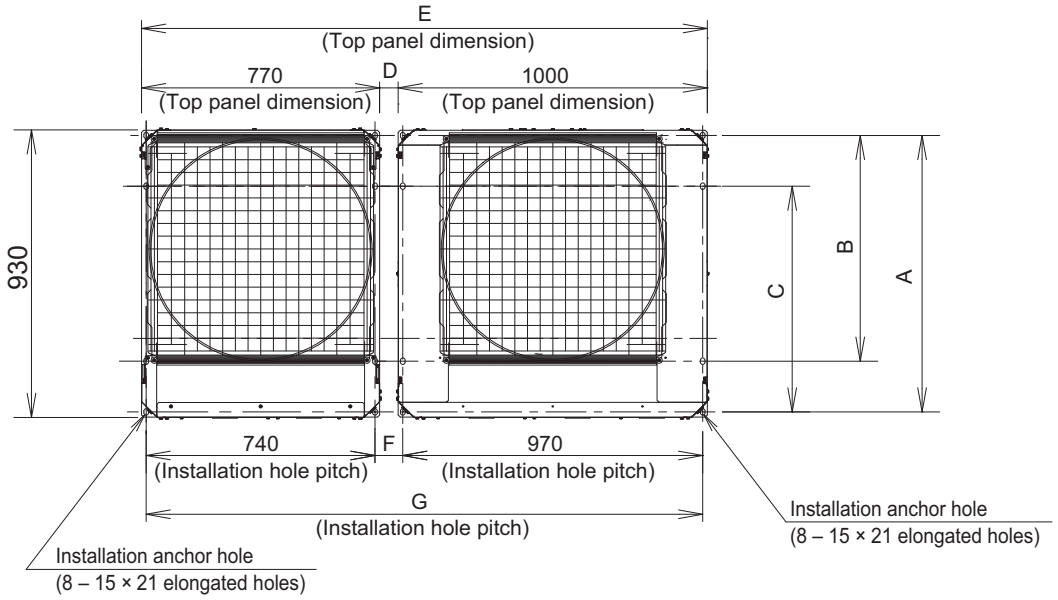

Top view

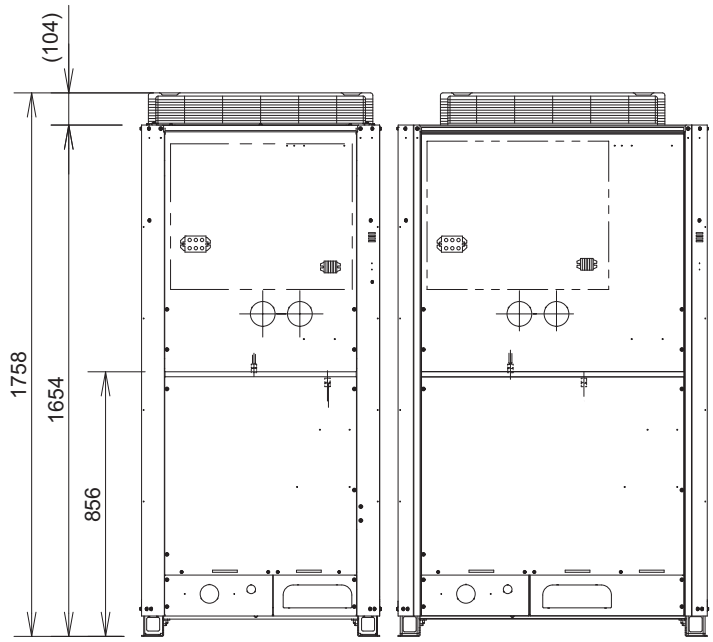

Front view

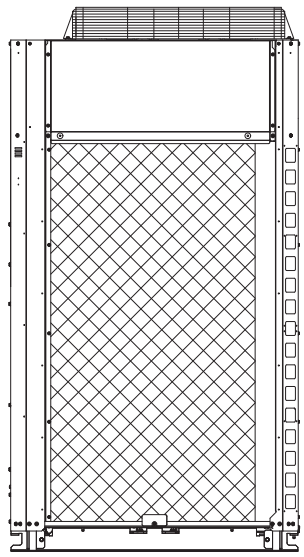

Side view

・According to the installation site, you may choose the setting position in the depth direction of the anchor bolt from "A", "B" or "C".

Equivalent horsepower		22 hp	24 hp	26 hp	28 hp
8	U-8ME1E81	○	—	—	—
10	U-10ME1E81	—	○	—	—
12	U-12ME1E81	—	—	○	○
14	U-14ME1E81	○	○	○	—
16	U-18ME1E81	—	—	—	○

		D	E	F	G
A	894 (Installation hole pitch) * The tubing is routed out from the front.	60	1830	90	1800
B	730 (Installation hole pitch) * The tubing is routed out from the bottom.	180	1950	210	1920
C	730 (Installation hole pitch)	180	1950	210	1920

1. Outdoor Unit

1-3. Multiple Unit Installation Example (Standard-COP mode)(continued)

● Diagrams for 30hp & 32hp

Unit: mm

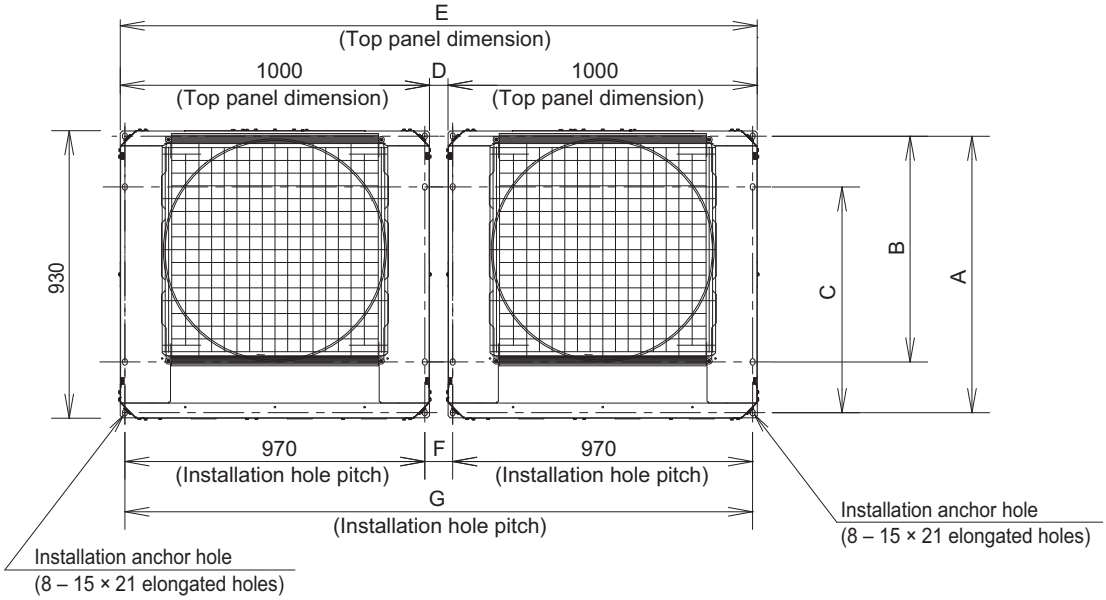

Top view

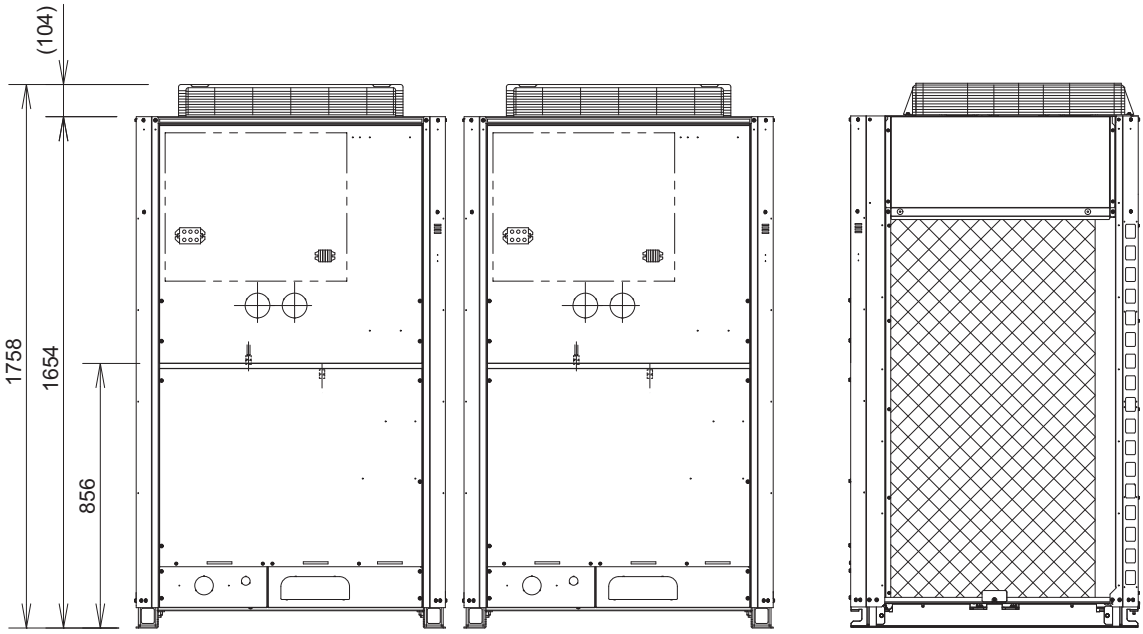

Front view **Side view**

Equivalent horsepower		30 hp	32 hp
14	U-14ME1E81	○	—
16	U-16ME1E81	○	○○

・According to the installation site, you may choose the setting position in the depth direction of the anchor bolt from "A", "B" or "C".

		D	E	F	G
A	894 (Installation hole pitch) * The tubing is routed out from the front.	60	2060	90	2030
B	730 (Installation hole pitch) * The tubing is routed out from the bottom.	180	2180	210	2150
C	730 (Installation hole pitch)	180	2180	210	2150

1. Outdoor Unit

1-3. Multiple Unit Installation Example (Standard-COP mode)(continued)

● Diagrams for 34hp & 36hp

Unit: mm

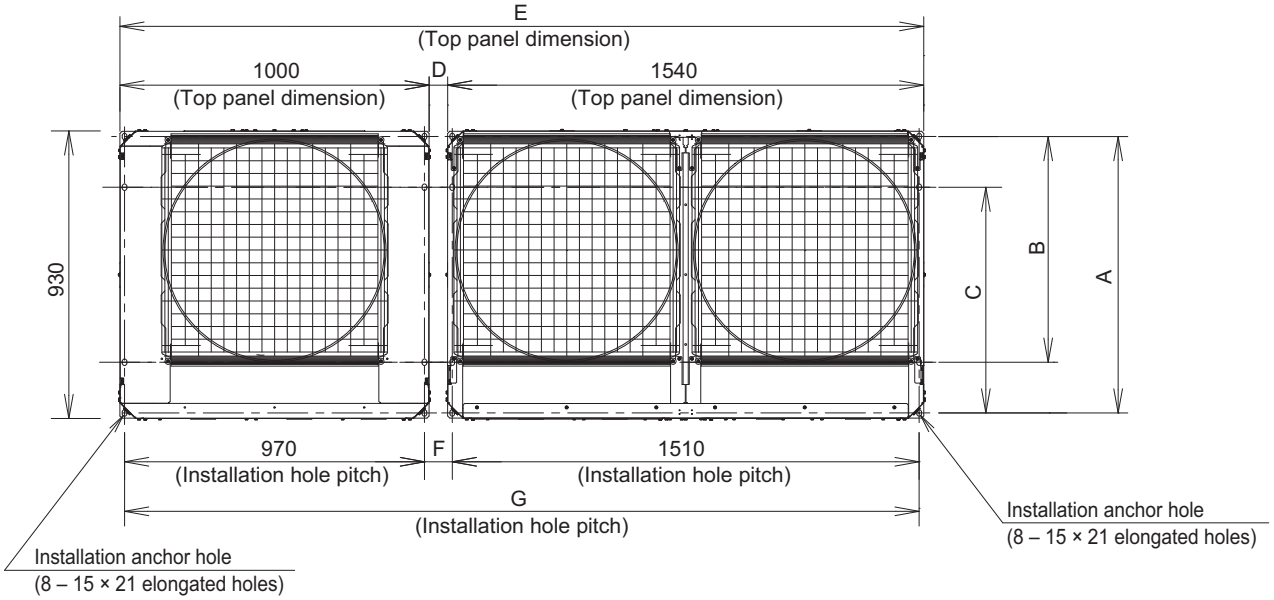

Top view

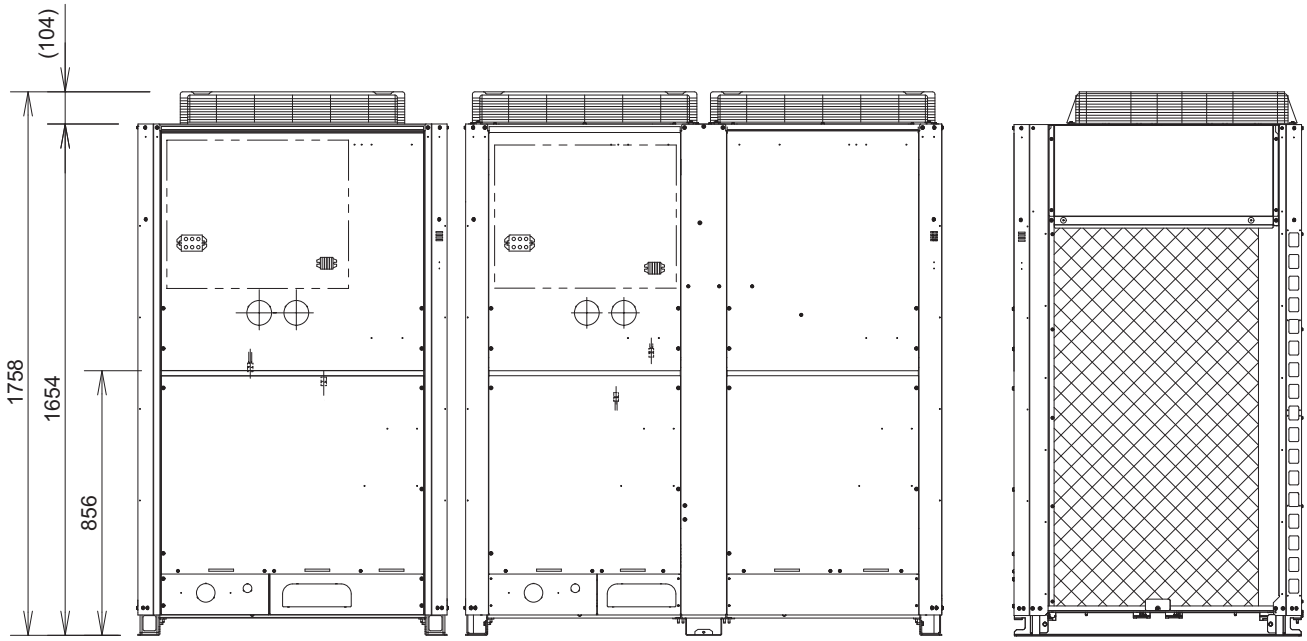

Front view **Side view**

Equivalent horsepower		34 hp	36 hp
16	U-16ME1E81	○	○
18	U-18ME1E81	○	—
20	U-20ME1E81	—	○

・According to the installation site, you may choose the setting position in the depth direction of the anchor bolt from "A", "B" or "C".

		D	E	F	G
A	894 (Installation hole pitch) * The tubing is routed out from the front.	60	2600	90	2570
B	730 (Installation hole pitch) * The tubing is routed out from the bottom.	180	2720	210	2690
C	730 (Installation hole pitch)	180	2720	210	2690

1. Outdoor Unit

1-3. Multiple Unit Installation Example (Standard-COP mode)(continued)

● Diagrams for 38hp & 40hp

Unit: mm

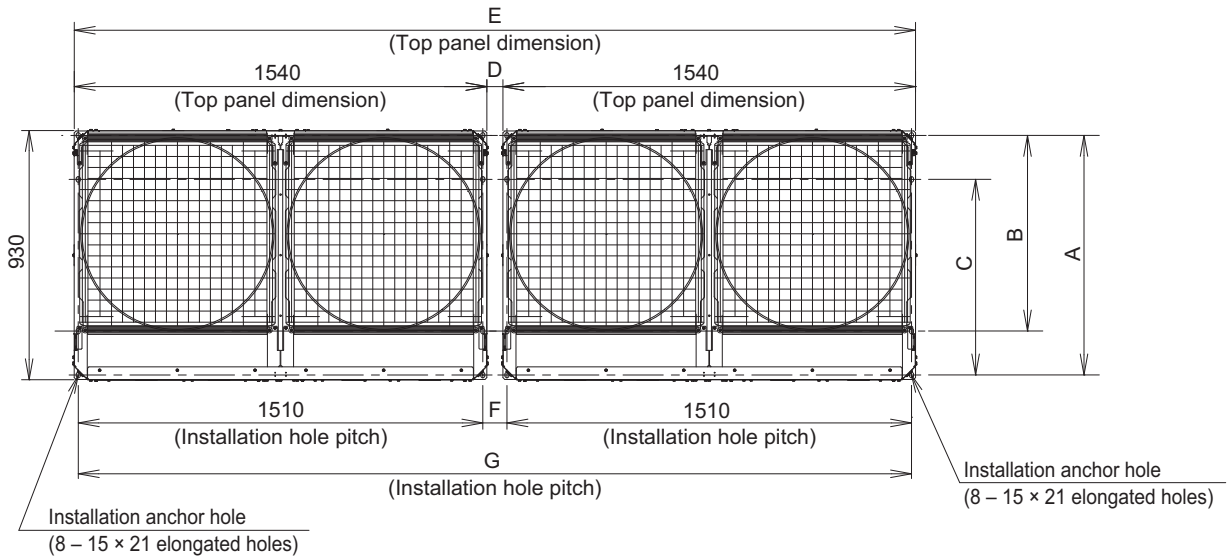

Top view

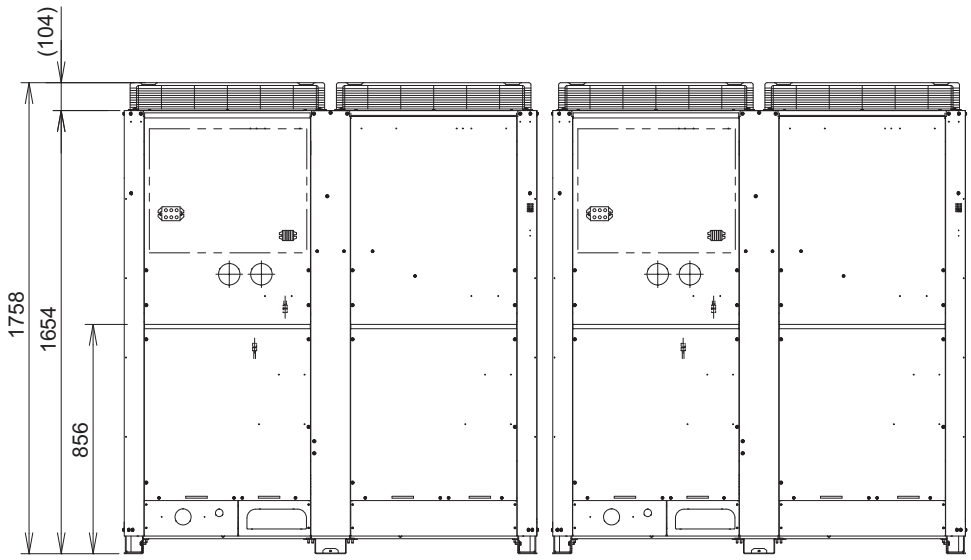

Front view

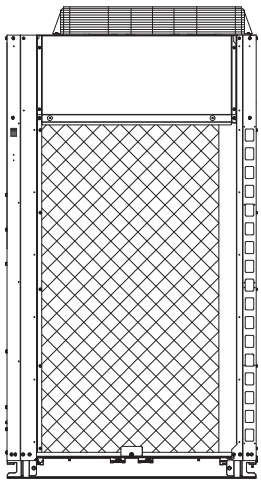

Side view

Equivalent horsepower		38 hp	40 hp
18	U-18ME1E81	○	—
20	U-20ME1E81	○	○○

・According to the installation site, you may choose the setting position in the depth direction of the anchor bolt from "A", "B" or "C".

		D	E	F	G
A	894 (Installation hole pitch) * The tubing is routed out from the front.	60	3140	90	3110
B	730 (Installation hole pitch) * The tubing is routed out from the bottom.	180	3260	210	3230
C	730 (Installation hole pitch)	180	3260	210	3230

1. Outdoor Unit

1-3. Multiple Unit Installation Example (Standard-COP mode)(continued)

● Diagrams for 42hp & 44hp

Unit: mm

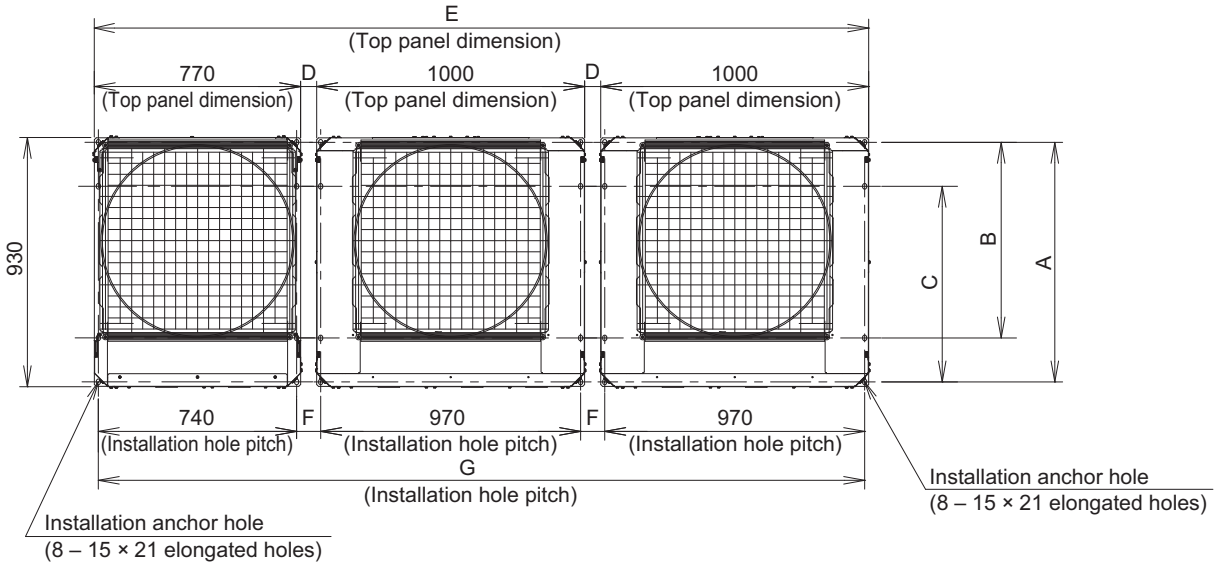

Top view

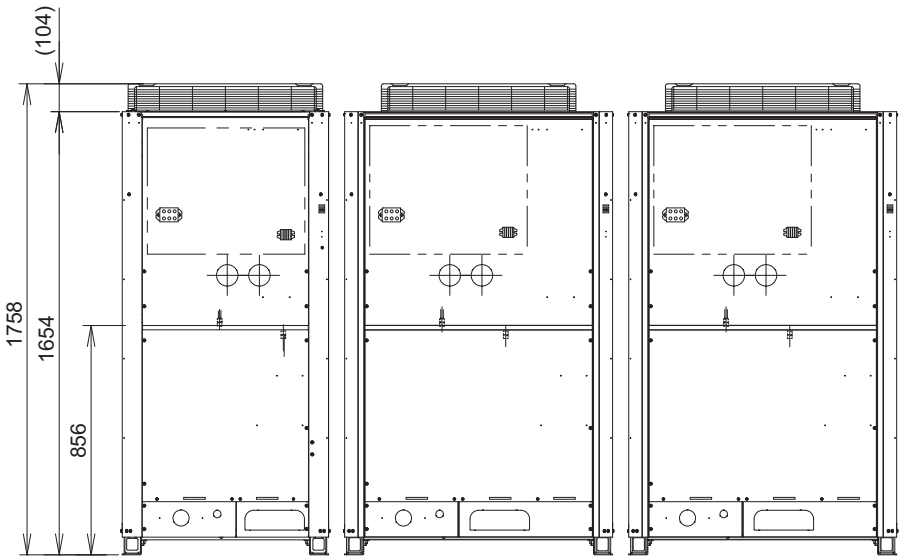

Front view

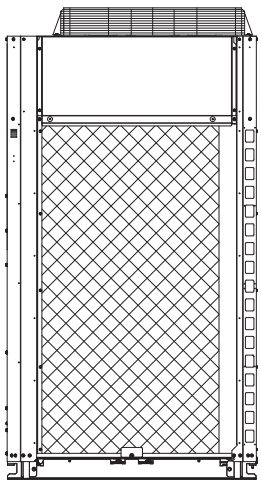

Side view

Equivalent horsepower		42 hp	44 hp
12	U-12ME1E81	○	○
14	U-14ME1E81	○	—
16	U-16ME1E81	○	○○

・According to the installation site, you may choose the setting position in the depth direction of the anchor bolt from "A", "B" or "C".

		D	E	F	G
A	894 (Installation hole pitch) * The tubing is routed out from the front.	60	2890	90	2860
B	730 (Installation hole pitch) * The tubing is routed out from the bottom.	180	3130	210	3100
C	730 (Installation hole pitch)	180	3130	210	3100

1. Outdoor Unit

1-3. Multiple Unit Installation Example (Standard-COP mode)(continued)

● Diagrams for 46hp & 48hp

Unit: mm

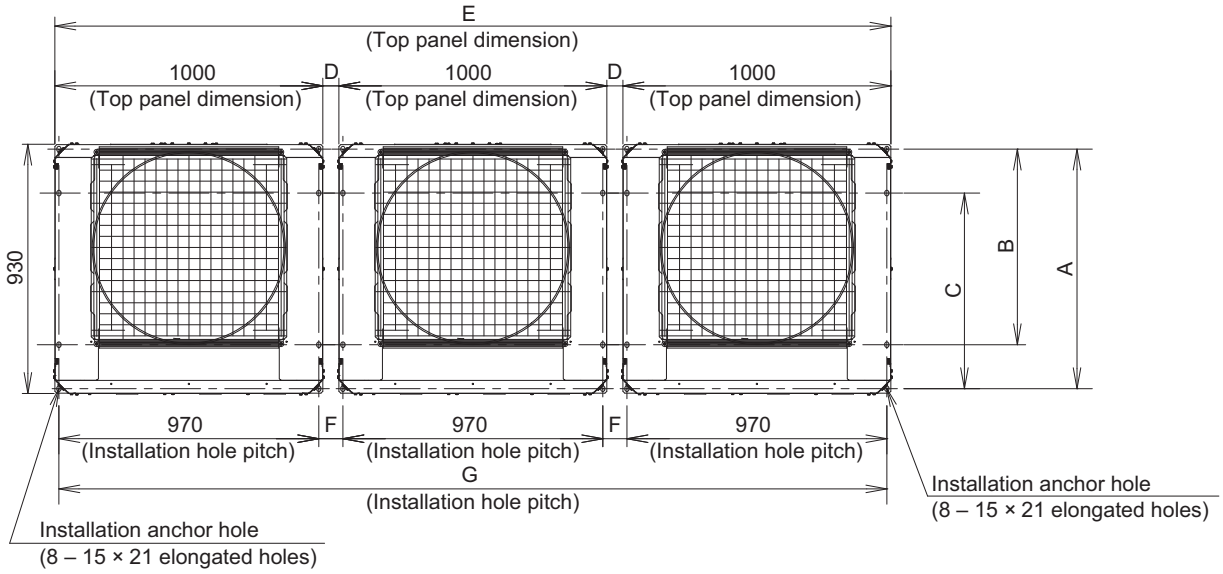

Top view

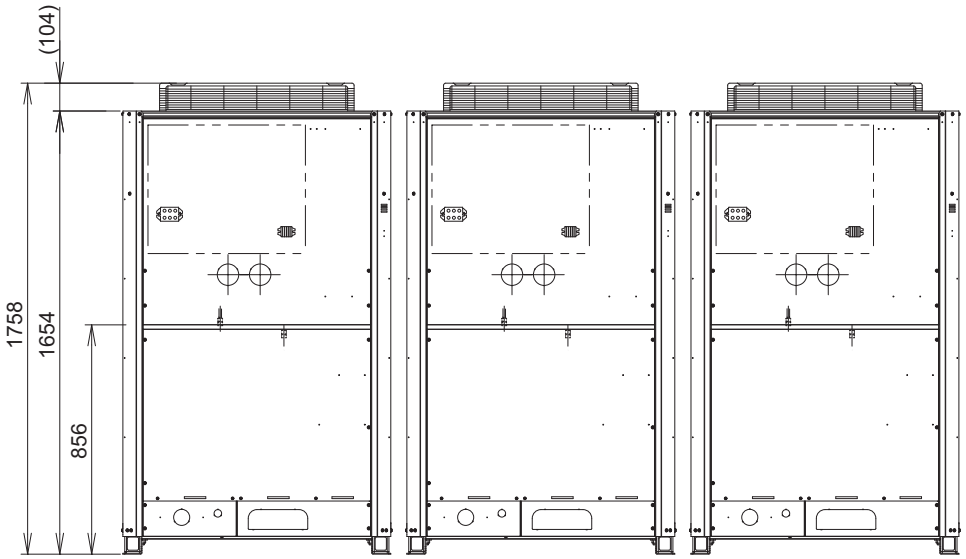

Front view

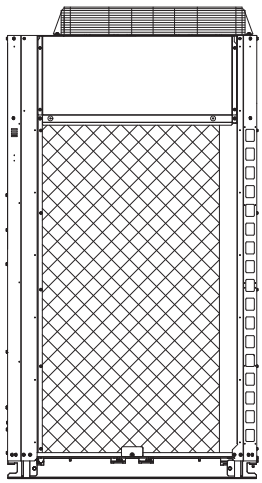

Side view

Equivalent horsepower		46 hp	48 hp
14	U-14ME1E81	○	—
16	U-16ME1E81	○○	○○○

・According to the installation site, you may choose the setting position in the depth direction of the anchor bolt from "A", "B" or "C".

		D	E	F	G
A	894 (Installation hole pitch) * The tubing is routed out from the front.	60	3120	90	3090
B	730 (Installation hole pitch) * The tubing is routed out from the bottom.	180	3360	210	3330
C	730 (Installation hole pitch)	180	3360	210	3330

1. Outdoor Unit

1-3. Multiple Unit Installation Example (Standard-COP mode)(continued)

● Diagrams for 50hp & 52hp

Unit: mm

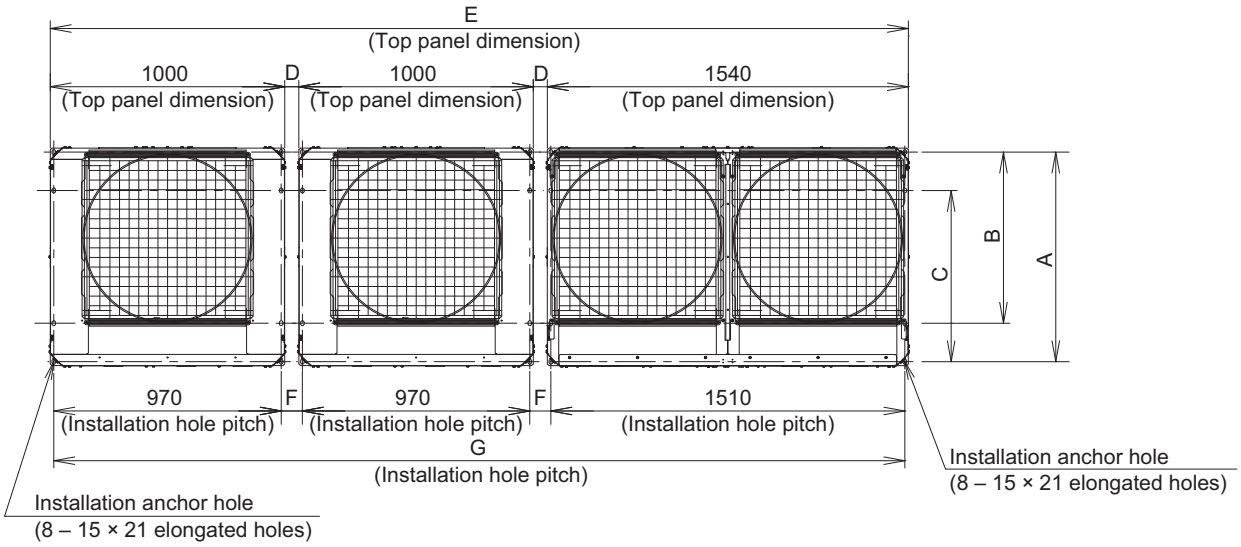

Top view

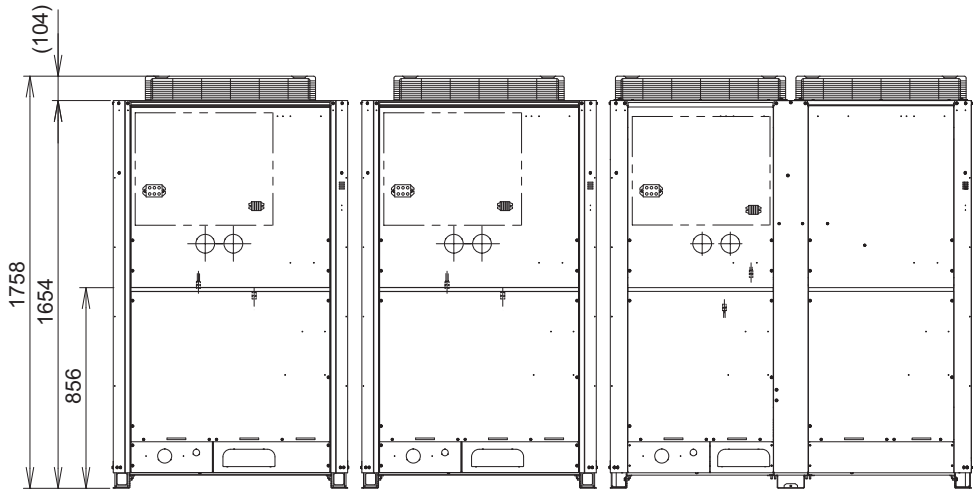

Front view

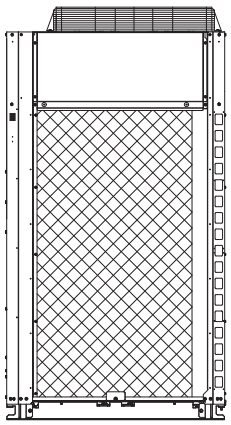

Side view

Equivalent horsepower		50 hp	52 hp
16	U-16ME1E81	○○	○○
18	U-18ME1E81	○	—
20	U-20ME1E81	—	○

・According to the installation site, you may choose the setting position in the depth direction of the anchor bolt from "A", "B" or "C".

		D	E	F	G
A	894 (Installation hole pitch) * The tubing is routed out from the front.	60	3660	90	3630
B	730 (Installation hole pitch) * The tubing is routed out from the bottom.	180	3900	210	3870
C	730 (Installation hole pitch)	180	3900	210	3870

1. Outdoor Unit

1-3. Multiple Unit Installation Example (Standard-COP mode)(continued)

● Diagrams for 54hp

Unit: mm

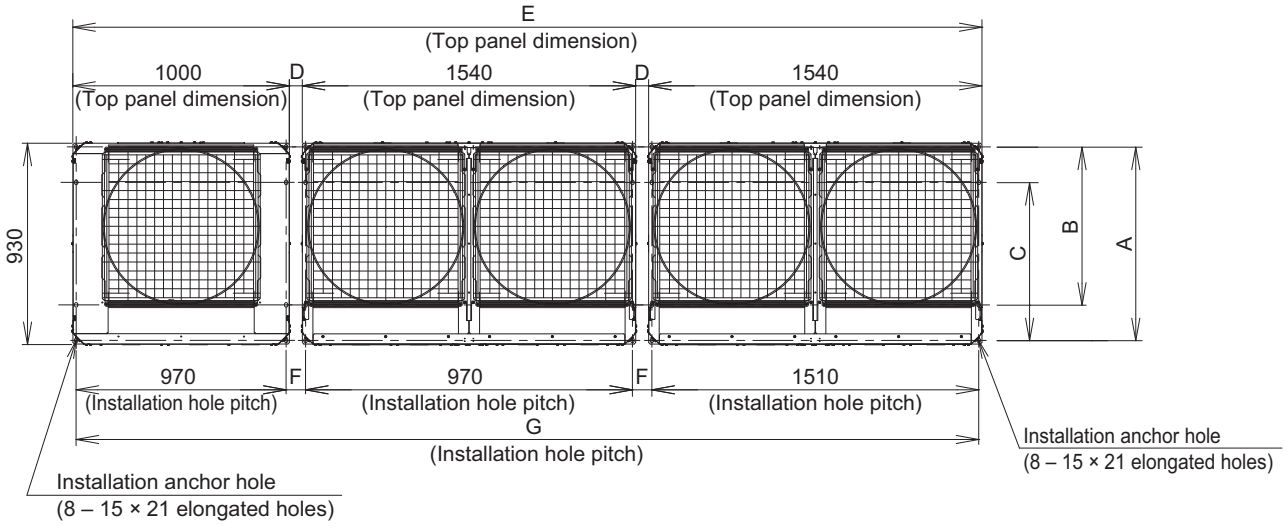

Top view

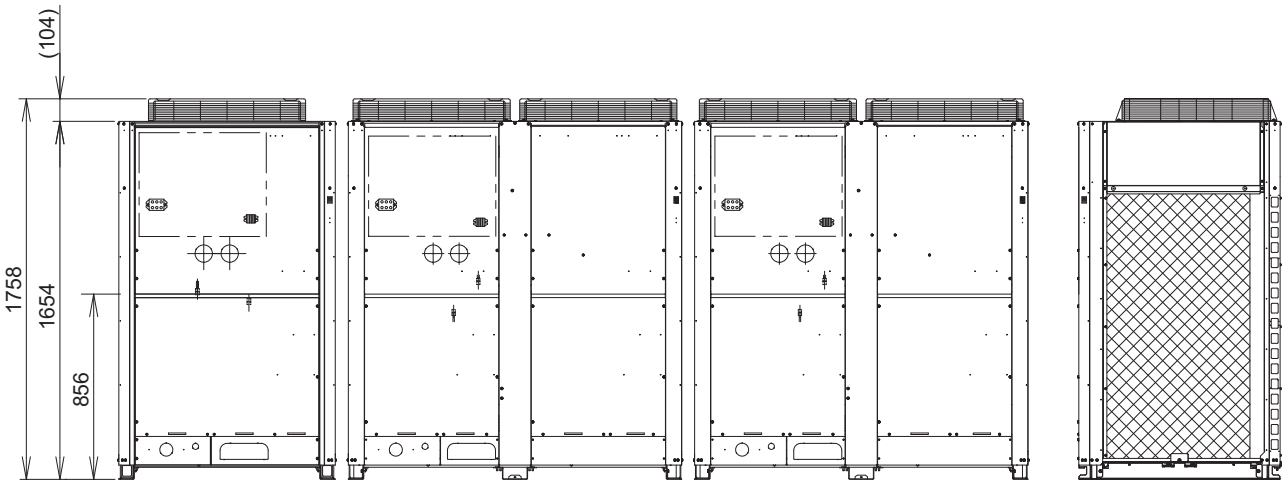

Front view **Side view**

Equivalent horsepower		54 hp
16	U-16ME1E81	○
18	U-18ME1E81	○
20	U-20ME1E81	○

・According to the installation site, you may choose the setting position in the depth direction of the anchor bolt from "A", "B" or "C".

		D	E	F	G
A	894 (Installation hole pitch) * The tubing is routed out from the front.	60	4200	90	4170
B	730 (Installation hole pitch) * The tubing is routed out from the bottom.	180	4440	210	4410
C	730 (Installation hole pitch)	180	4440	210	4410

1. Outdoor Unit

1-3. Multiple Unit Installation Example (Standard-COP mode)(continued)

● Diagrams for 56hp ~ 60hp

Unit: mm

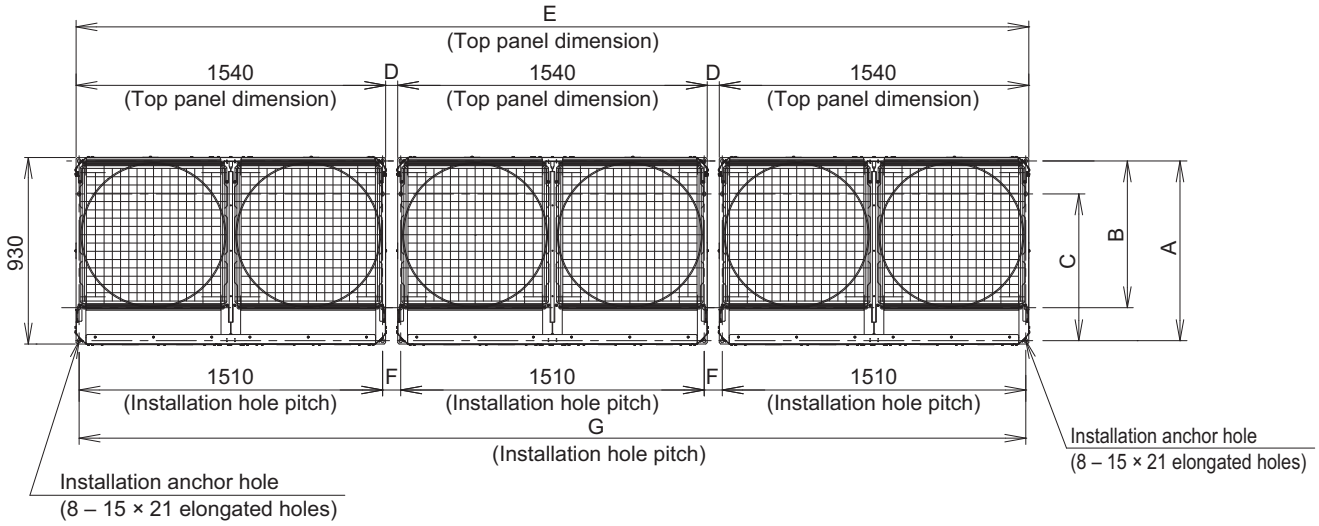

Top view

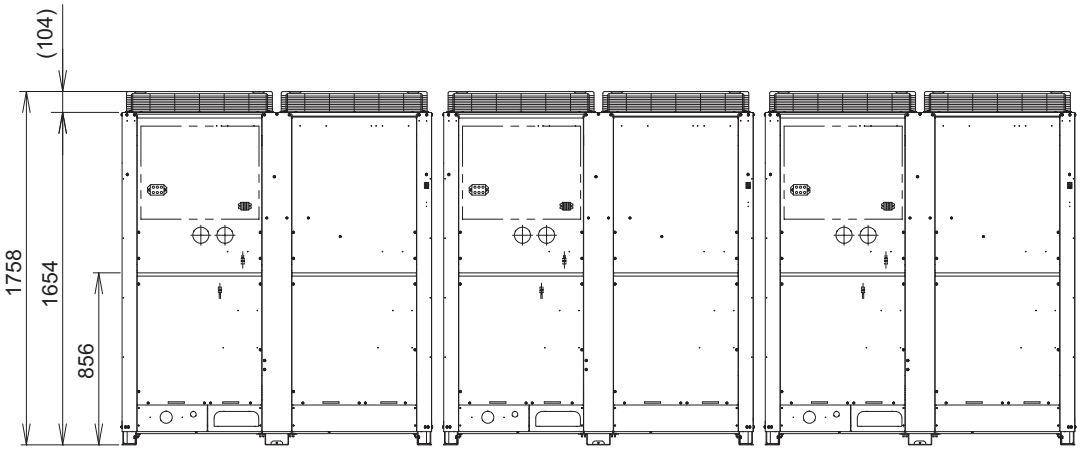

Front view

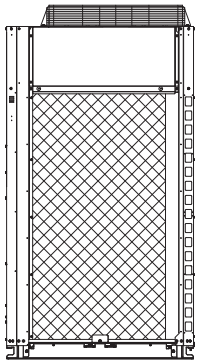

Side view

・According to the installation site, you may choose the setting position in the depth direction of the anchor bolt from "A", "B" or "C".

Equivalent horsepower		56 hp	58 hp	60 hp
18	U-18ME1E81	○○	○	—
20	U-20ME1E81	○	○○	○○○

		D	E	F	G
A	894 (Installation hole pitch) * The tubing is routed out from the front.	60	4740	90	4710
B	730 (Installation hole pitch) * The tubing is routed out from the bottom.	180	4980	210	4950
C	730 (Installation hole pitch)	180	4980	210	4950

1. Outdoor Unit

1-3. Multiple Unit Installation Example (High-COP mode)

● Diagrams for 18hp & 20hp

Unit: mm

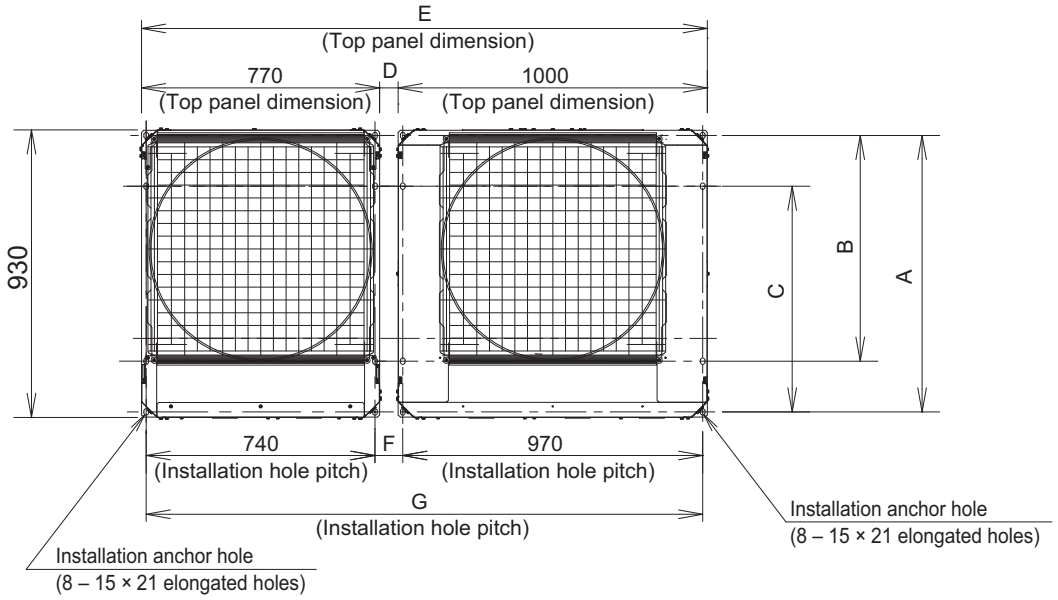

Top view

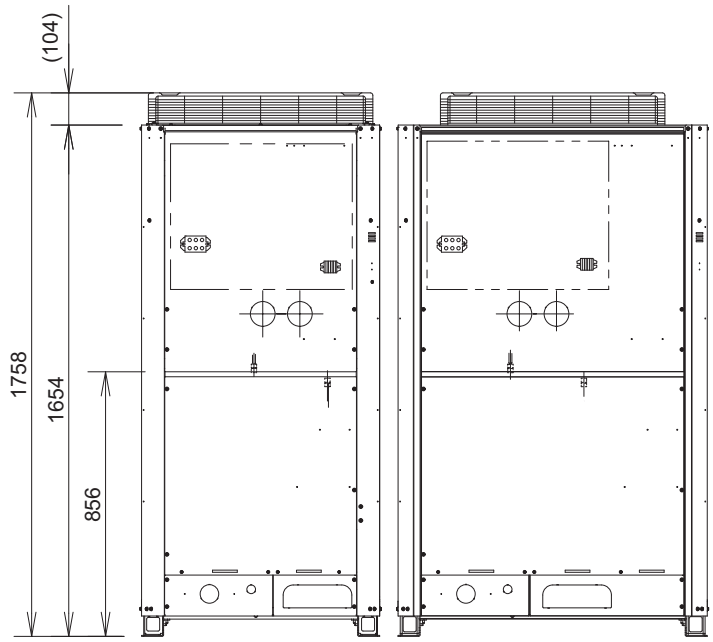

Front view

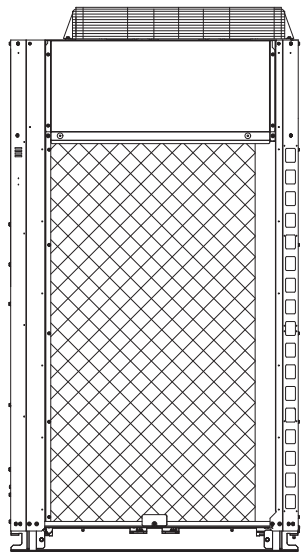

Side view

Equivalent horsepower	18 hp	20 hp
U-8ME1E81	○	○
U-14ME1E81	○	—
U-16ME1E81	—	○

・According to the installation site, you may choose the setting position in the depth direction of the anchor bolt from "A", "B" or "C".

		D	E	F	G
A	894 (Installation hole pitch) * The tubing is routed out from the front.	60	1830	90	1800
B	730 (Installation hole pitch) * The tubing is routed out from the bottom.	180	1950	210	1920
C	730 (Installation hole pitch)	180	1950	210	1920

1. Outdoor Unit

1-3. Multiple Unit Installation Example (High-COP mode)(continued)

● Diagrams for 22hp

Unit: mm

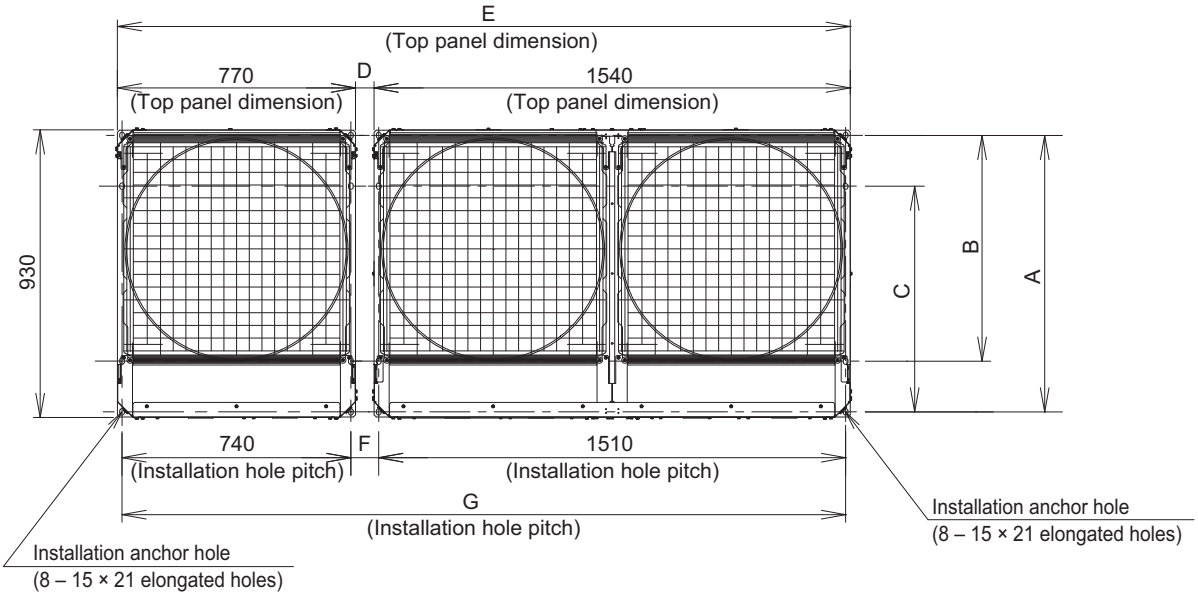

Top view

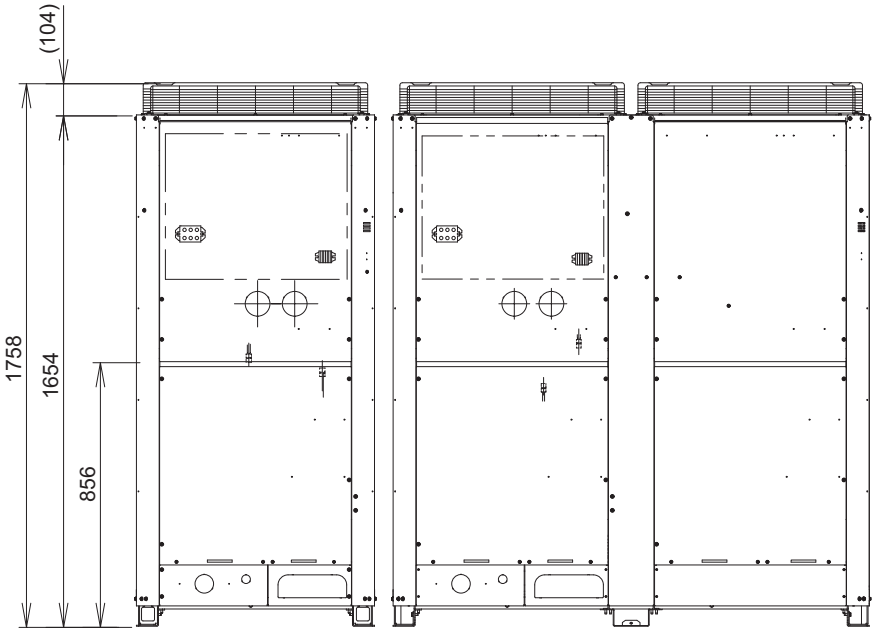

Front view

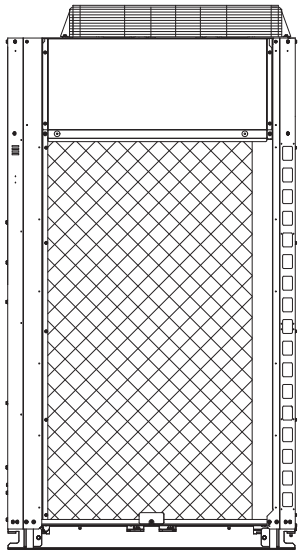

Side view

Equivalent horsepower	22 hp
U-8ME1E81	○
U-18ME1E81	○

・According to the installation site, you may choose the setting position in the depth direction of the anchor bolt from "A", "B" or "C".

		D	E	F	G
A	894 (Installation hole pitch) * The tubing is routed out from the front.	60	2370	90	2340
B	730 (Installation hole pitch) * The tubing is routed out from the bottom.	180	2490	210	2460
C	730 (Installation hole pitch)	180	2490	210	2460

1. Outdoor Unit

1-3. Multiple Unit Installation Example (High-COP mode)(continued)

● Diagrams for 24hp

Unit: mm

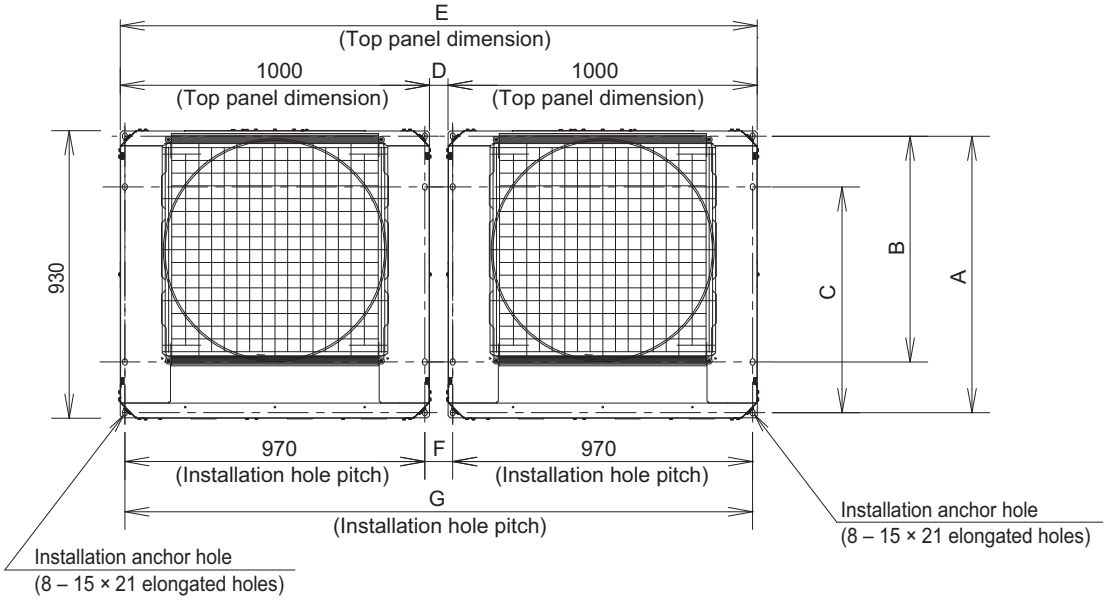

Top view

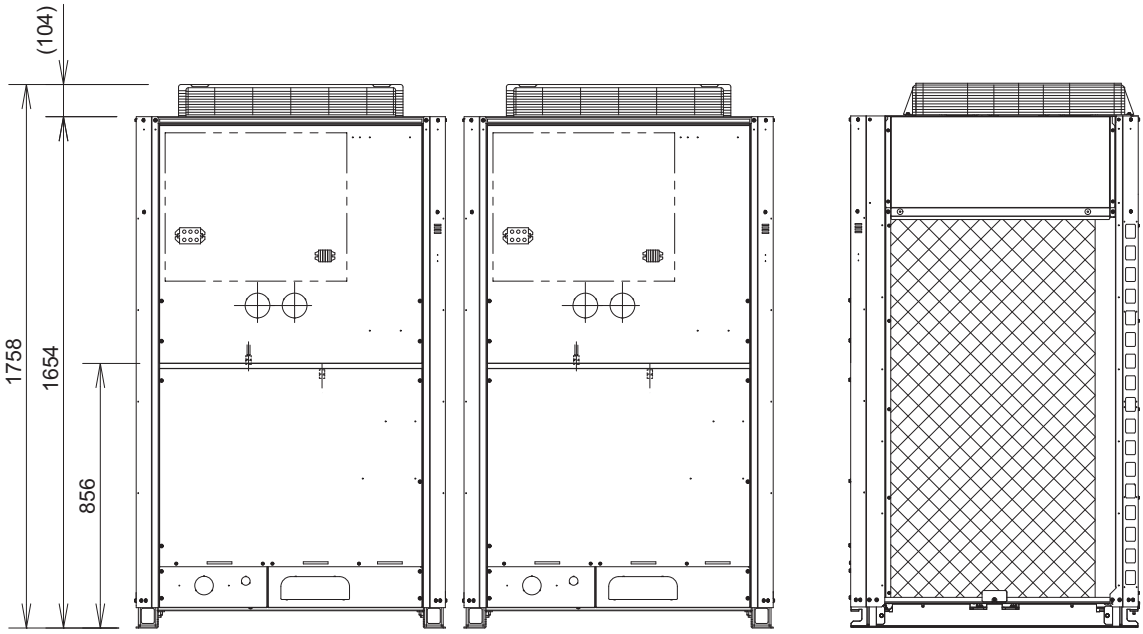

Front view **Side view**

Equivalent horsepower	24 hp
U-16ME1E81	○○

・According to the installation site, you may choose the setting position in the depth direction of the anchor bolt from "A", "B" or "C".

		D	E	F	G
A	894 (Installation hole pitch) * The tubing is routed out from the front.	60	2060	90	2030
B	730 (Installation hole pitch) * The tubing is routed out from the bottom.	180	2180	210	2150
C	730 (Installation hole pitch)	180	2180	210	2150

1. Outdoor Unit

1-3. Multiple Unit Installation Example (High-COP mode)(continued)

● Diagrams for 26hp & 28hp

Unit: mm

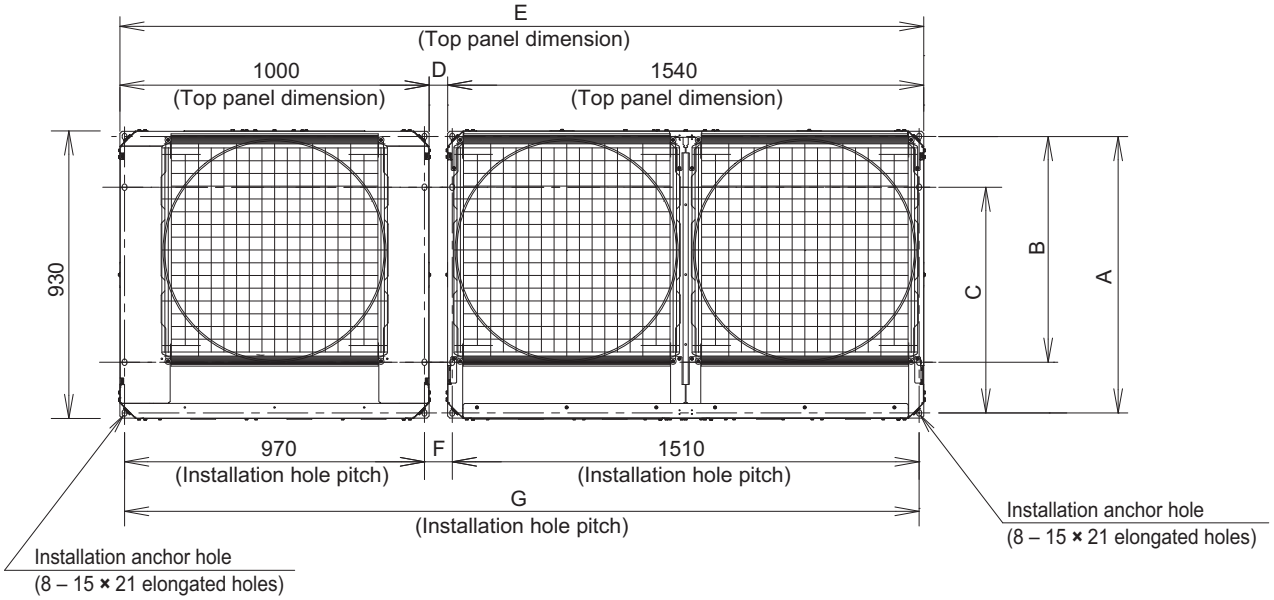

Top view

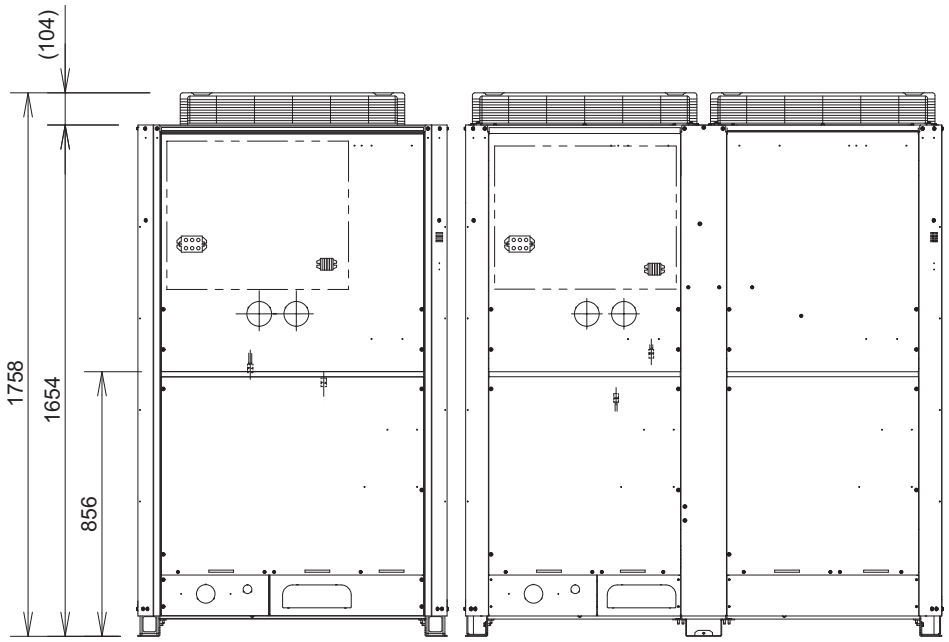

Front view

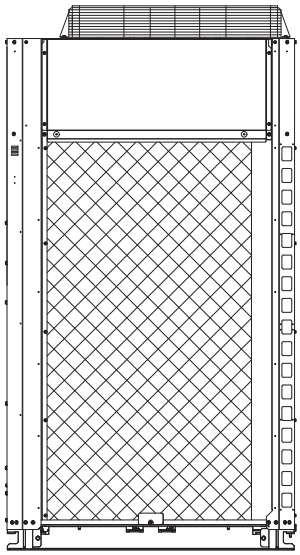

Side view

Equivalent horsepower	26 hp	28 hp
U-16ME1E81	○	○
U-18ME1E81	○	—
U-20ME1E81	—	○

・According to the installation site, you may choose the setting position in the depth direction of the anchor bolt from "A", "B" or "C".

		D	E	F	G
A	894 (Installation hole pitch) * The tubing is routed out from the front.	60	2600	90	2570
B	730 (Installation hole pitch) * The tubing is routed out from the bottom.	180	2720	210	2690
C	730 (Installation hole pitch)	180	2720	210	2690

1. Outdoor Unit

1-3. Multiple Unit Installation Example (High-COP mode)(continued)

● Diagrams for 30hp & 32hp

Unit: mm

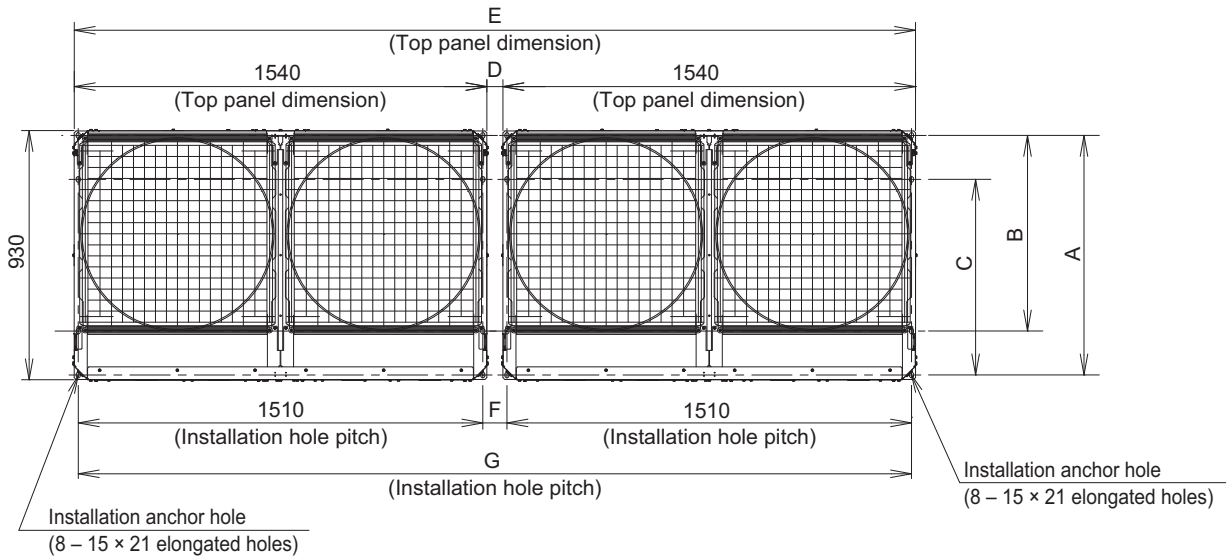

Top view

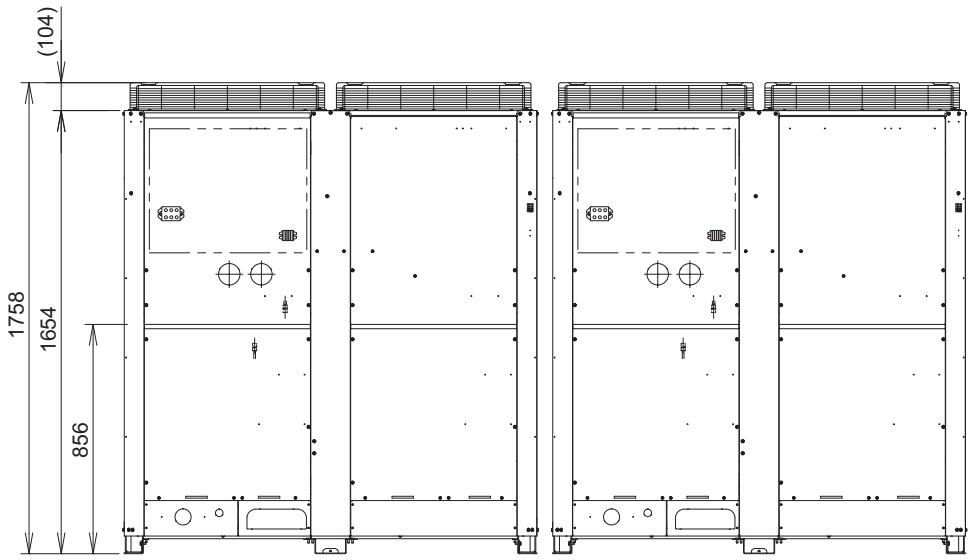

Front view

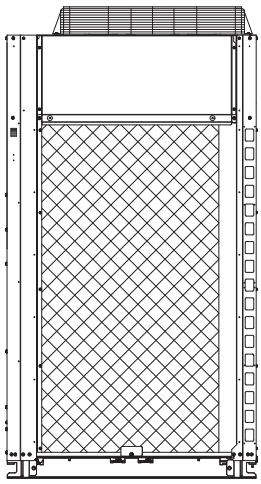

Side view

Equivalent horsepower	30 hp	32 hp
U-18ME1E81	○	—
U-20ME1E81	○	○○

・According to the installation site, you may choose the setting position in the depth direction of the anchor bolt from "A", "B" or "C".

		D	E	F	G
A	894 (Installation hole pitch) * The tubing is routed out from the front.	60	3140	90	3110
B	730 (Installation hole pitch) * The tubing is routed out from the bottom.	180	3260	210	3230
C	730 (Installation hole pitch)	180	3260	210	3230

1. Outdoor Unit

1-3. Multiple Unit Installation Example (High-COP mode)(continued)

● Diagrams for 34hp

Unit: mm

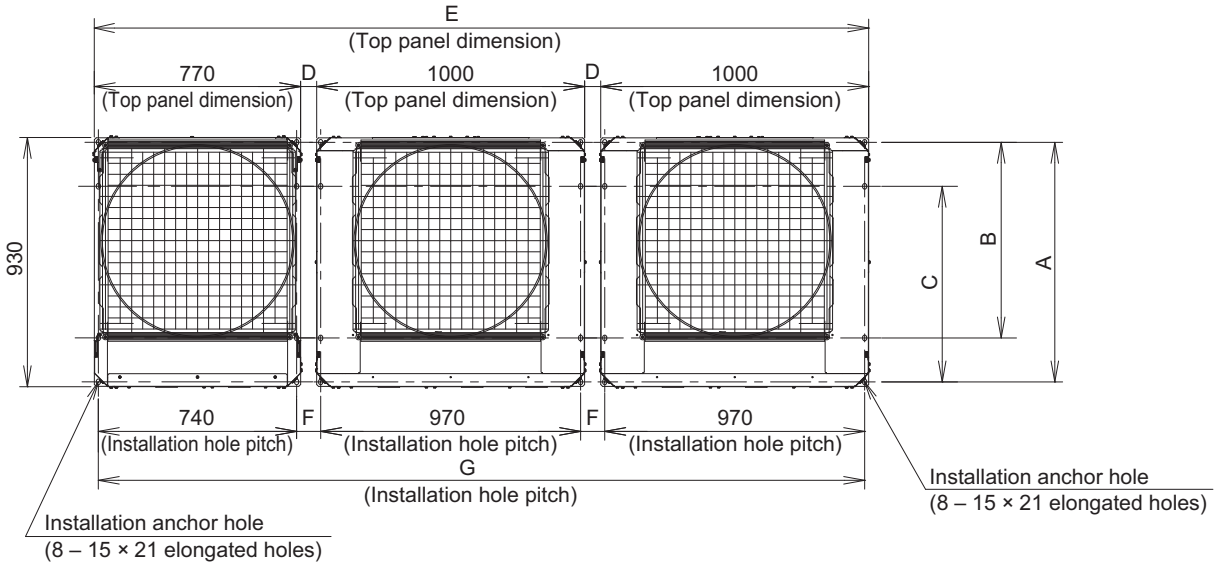

Top view

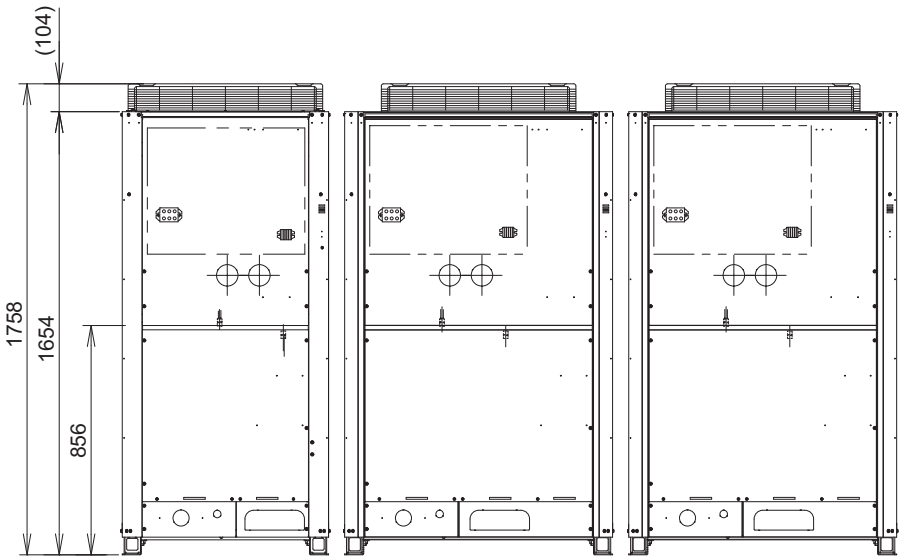

Front view

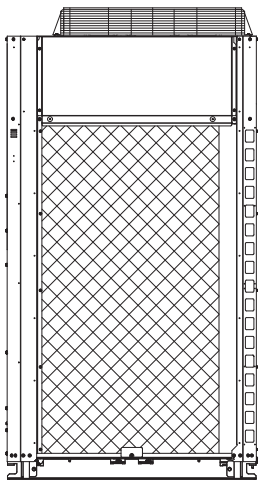

Side view

Equivalent horsepower	34 hp
U-8ME1E81	○
U-16ME1E81	○
U-18ME1E81	○

・According to the installation site, you may choose the setting position in the depth direction of the anchor bolt from "A", "B" or "C".

		D	E	F	G
A	894 (Installation hole pitch) * The tubing is routed out from the front.	60	2890	90	2860
B	730 (Installation hole pitch) * The tubing is routed out from the bottom.	180	3130	210	3100
C	730 (Installation hole pitch)	180	3130	210	3100

1. Outdoor Unit

1-3. Multiple Unit Installation Example (High-COP mode)(continued)

● Diagrams for 36hp

Unit: mm

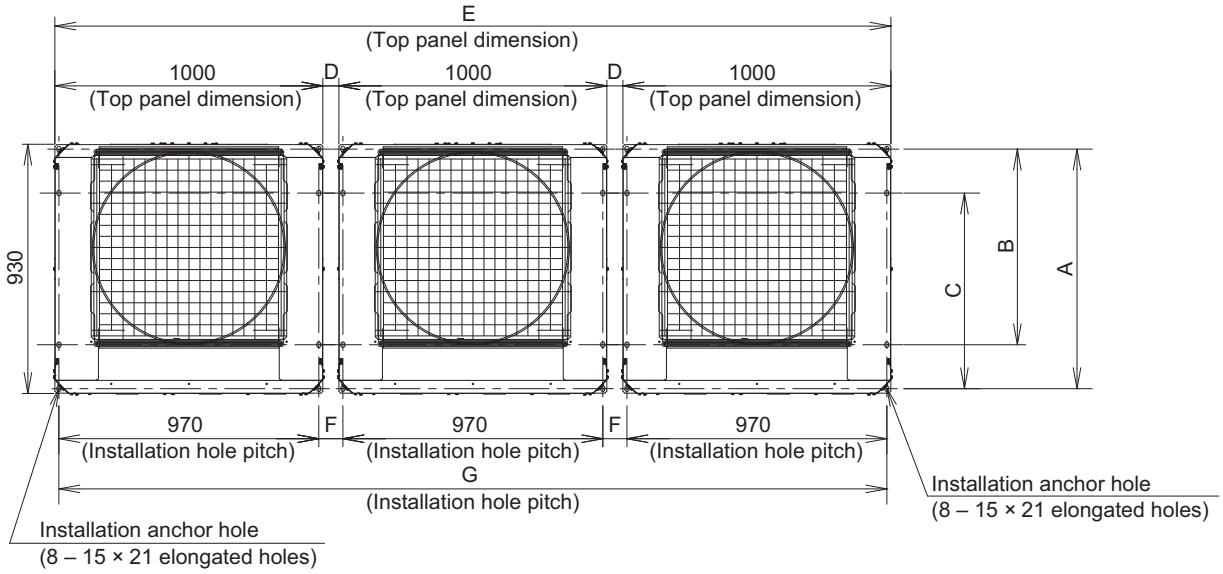

Top view

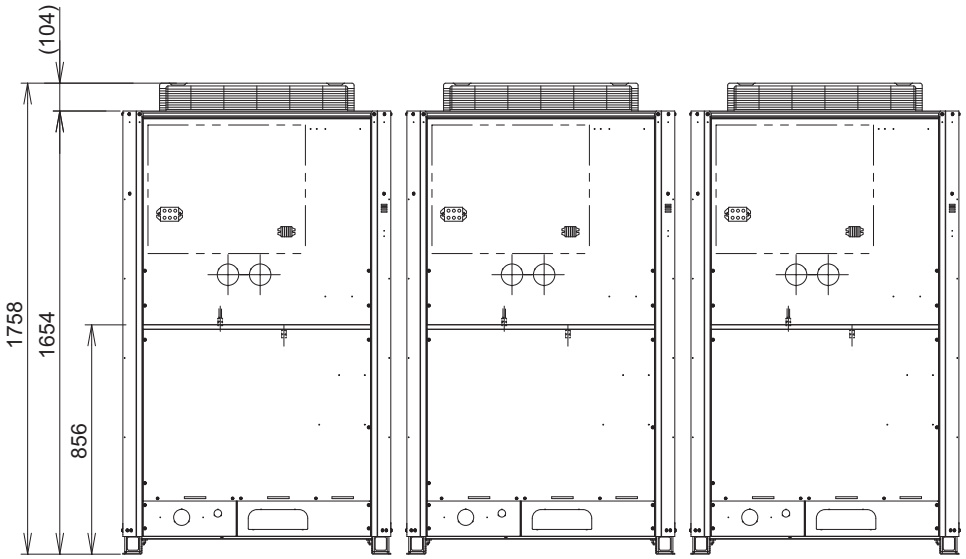

Front view

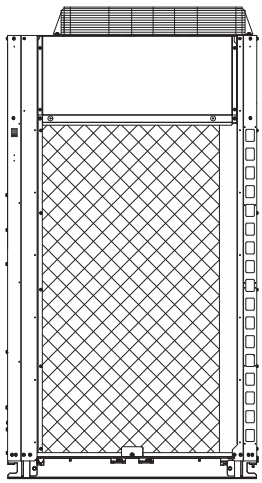

Side view

Equivalent horsepower	36 hp
U-16ME1E81	○○○

・According to the installation site, you may choose the setting position in the depth direction of the anchor bolt from "A", "B" or "C".

		D	E	F	G
A	894 (Installation hole pitch) * The tubing is routed out from the front.	60	3120	90	3090
B	730 (Installation hole pitch) * The tubing is routed out from the bottom.	180	3360	210	3330
C	730 (Installation hole pitch)	180	3360	210	3330

1. Outdoor Unit

1-3. Multiple Unit Installation Example (High-COP mode)(continued)

● Diagrams for 38hp & 40hp

Unit: mm

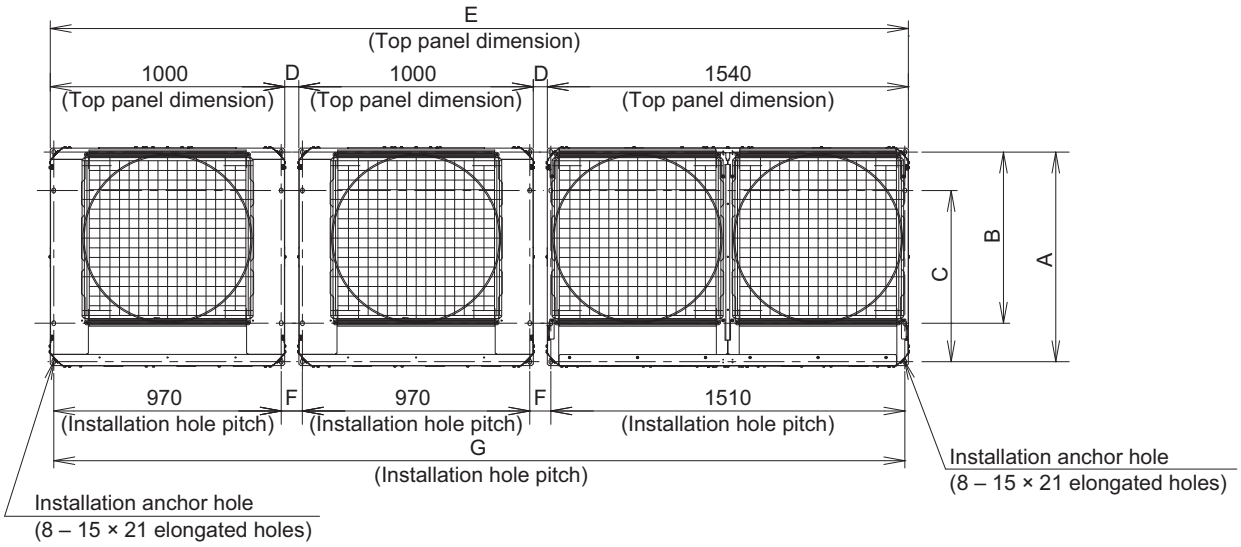

Top view

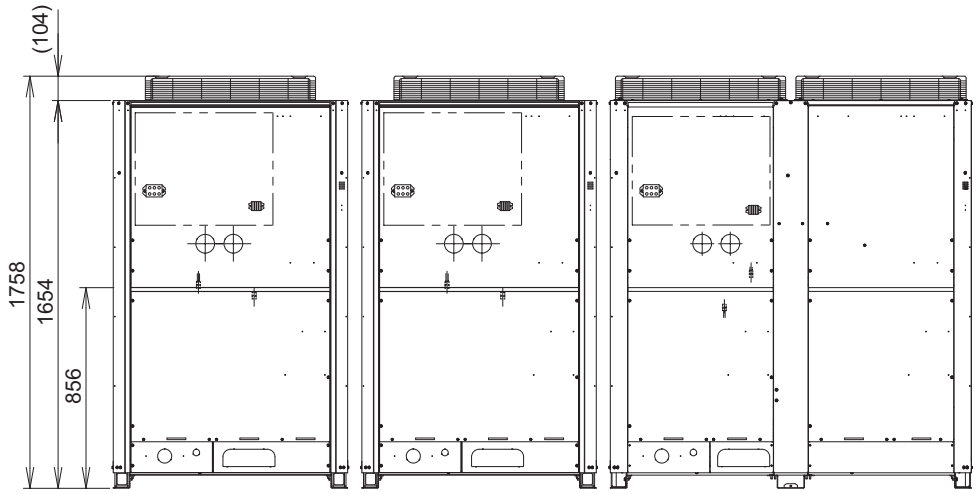

Front view

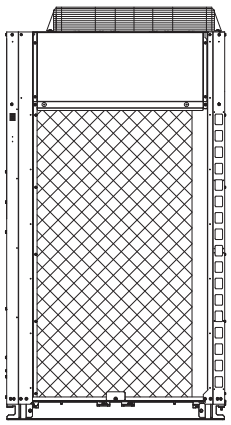

Side view

Equivalent horsepower	38 hp	40 hp
U-16ME1E81	○○	○○
U-18ME1E81	○	—
U-20ME1E81	—	○

・According to the installation site, you may choose the setting position in the depth direction of the anchor bolt from "A", "B" or "C".

		D	E	F	G
A	894 (Installation hole pitch) * The tubing is routed out from the front.	60	3660	90	3630
B	730 (Installation hole pitch) * The tubing is routed out from the bottom.	180	3900	210	3870
C	730 (Installation hole pitch)	180	3900	210	3870

1. Outdoor Unit

1-3. Multiple Unit Installation Example (High-COP mode)(continued)

● Diagrams for 42hp

Unit: mm

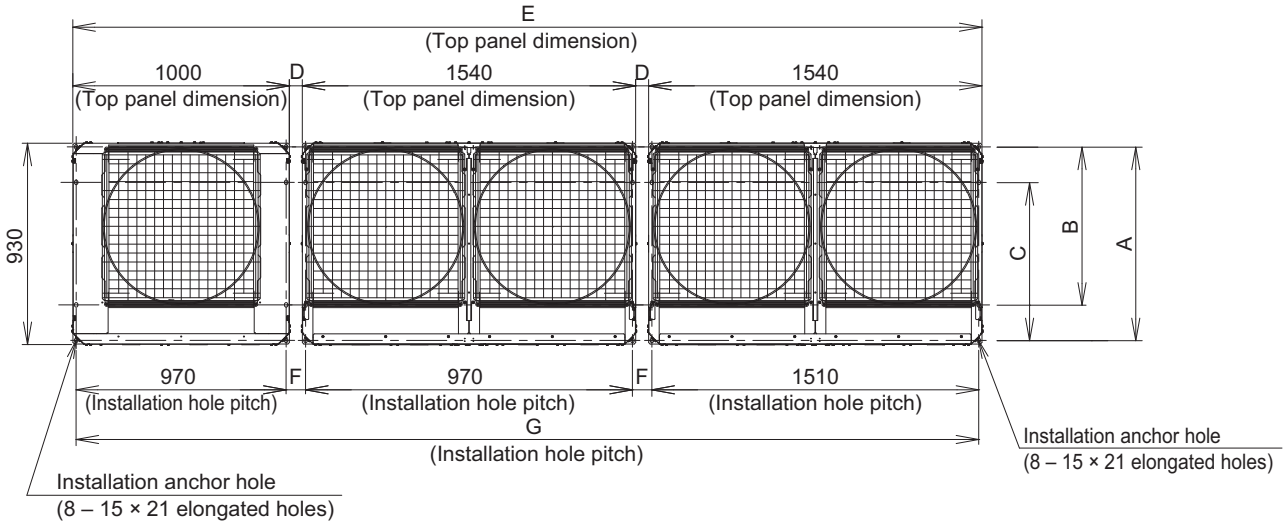

Top view

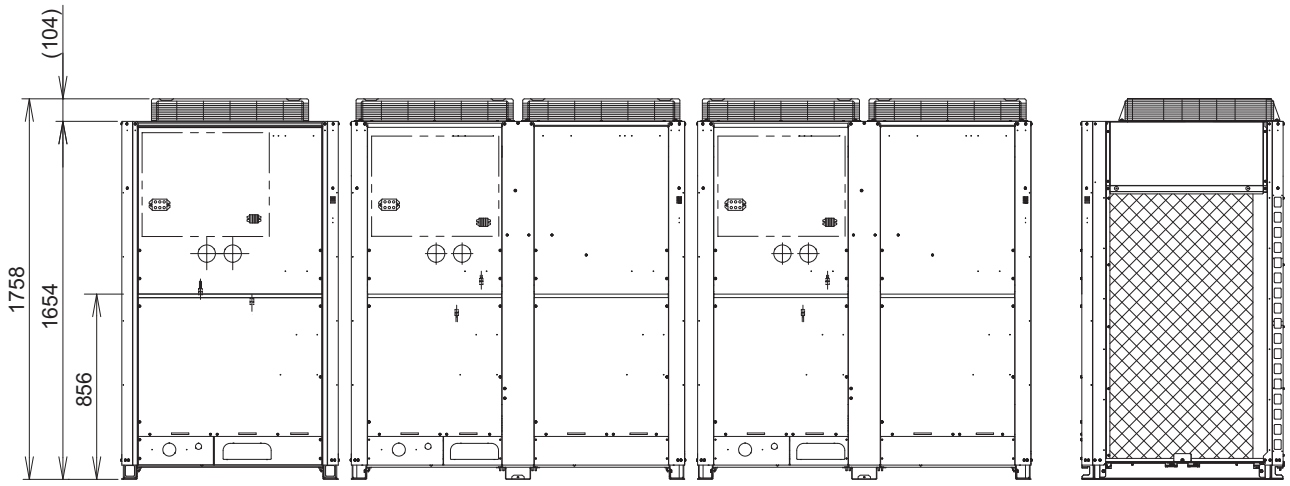

Front view **Side view**

Equivalent horsepower	42 hp
U-16ME1E81	○
U-18ME1E81	○
U-20ME1E81	○

・According to the installation site, you may choose the setting position in the depth direction of the anchor bolt from "A", "B" or "C".

		D	E	F	G
A	894 (Installation hole pitch) * The tubing is routed out from the front.	60	4200	90	4170
B	730 (Installation hole pitch) * The tubing is routed out from the bottom.	180	4440	210	4410
C	730 (Installation hole pitch)	180	4440	210	4410

1. Outdoor Unit

1-3. Multiple Unit Installation Example (High-COP mode)(continued)

● Diagrams for 44hp ~ 48hp

Unit: mm

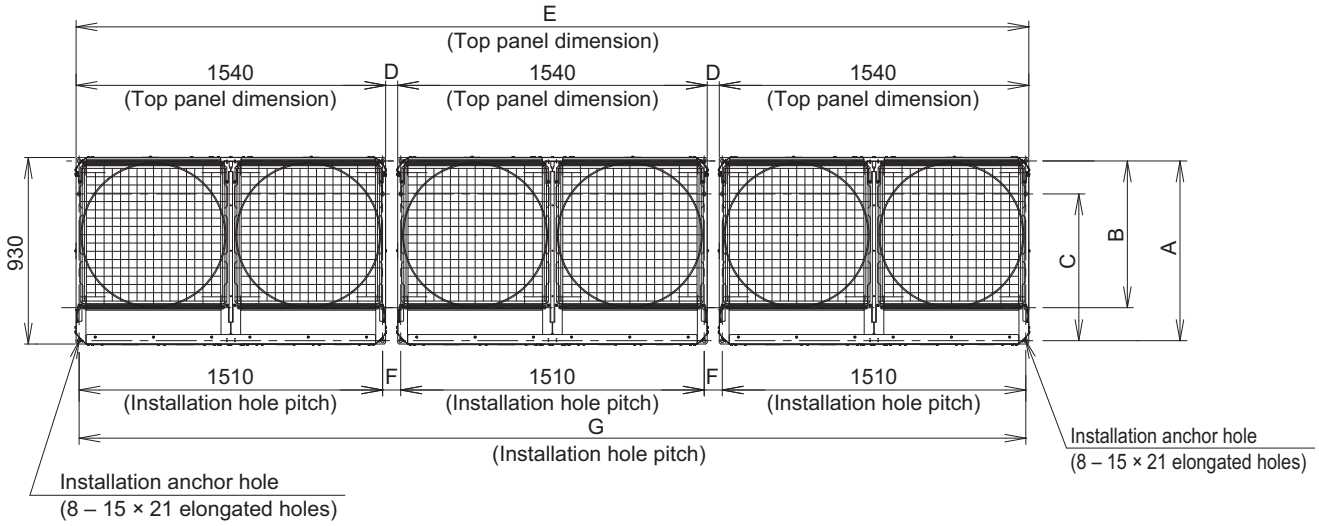

Top view

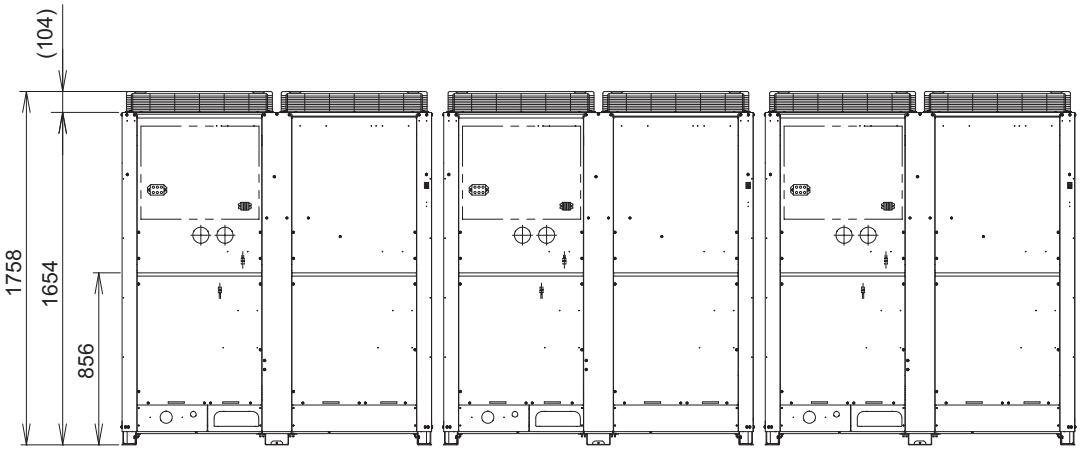

Front view

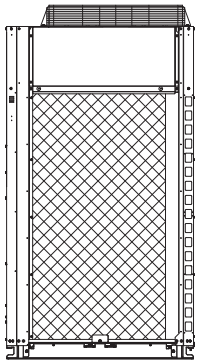

Side view

Equivalent horsepower	44 hp	46 hp	48 hp
U-18ME1E81	○○	○	—
U-20ME1E81	○	○○	○○○

・According to the installation site, you may choose the setting position in the depth direction of the anchor bolt from "A", "B" or "C".

		D	E	F	G
A	894 (Installation hole pitch) * The tubing is routed out from the front.	60	4740	90	4710
B	730 (Installation hole pitch) * The tubing is routed out from the bottom.	180	4980	210	4950
C	730 (Installation hole pitch)	180	4980	210	4950

1. Outdoor Unit

Position of center of gravity

U-8ME1E81, U-10ME1E81, U-12ME1E81

unit: mm

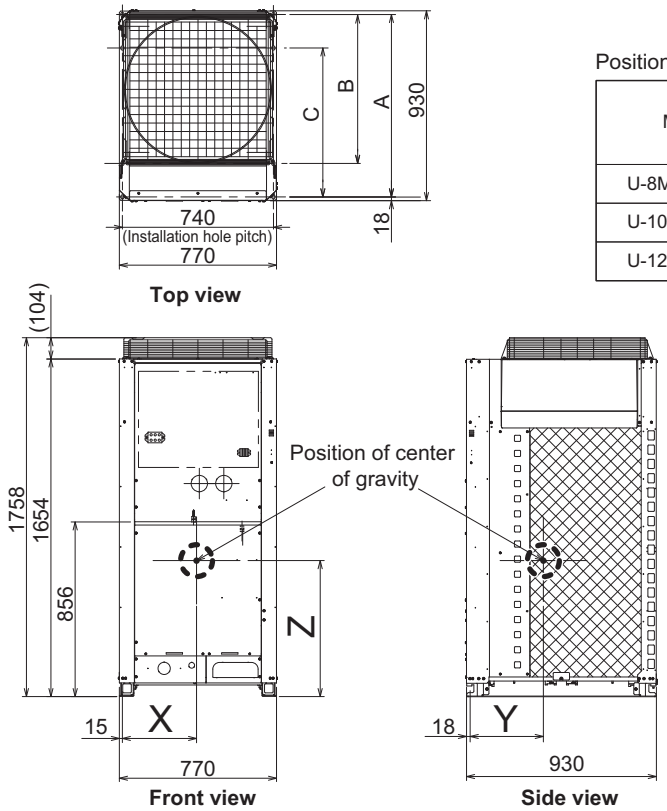

Position of center of gravity

Model	Position of center of gravity			Weight
	X	Y	Z	(kg)
U-8ME1E81	420	407	690	234
U-10ME1E81	420	407	690	234
U-12ME1E81	363	355	650	281

- According to the installation site, you may choose the setting position in the depth direction of the anchor bolt from "A", "B" or "C".

A : 894 (Installation hole pitch) * The tubing is routed out from the front.
B : 730 (Installation hole pitch) * The tubing is routed out from the bottom.
C : 730 (Installation hole pitch)

U-14ME1E81, U-16ME1E81

unit: mm

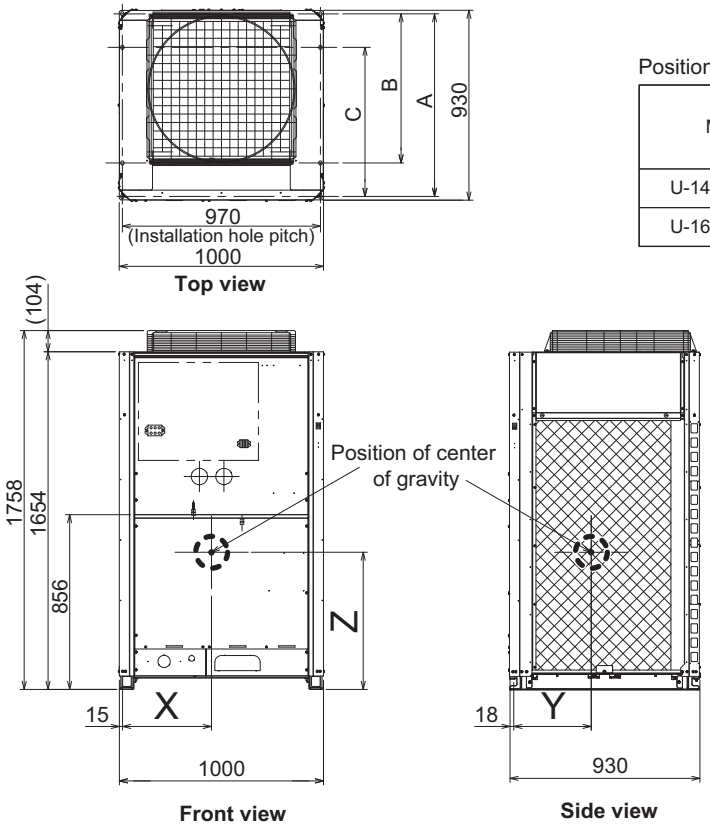

Position of center of gravity

Model	Position of center of gravity			Weight
	X	Y	Z	(kg)
U-14ME1E81	436	359	660	309
U-16ME1E81	436	359	660	309

- According to the installation site, you may choose the setting position in the depth direction of the anchor bolt from "A", "B" or "C".

A : 894 (Installation hole pitch) * The tubing is routed out from the front.
B : 730 (Installation hole pitch) * The tubing is routed out from the bottom.
C : 730 (Installation hole pitch)

1. Outdoor Unit

Position of center of gravity (continued)
U-18ME1E81, U-20ME1E81

unit: mm

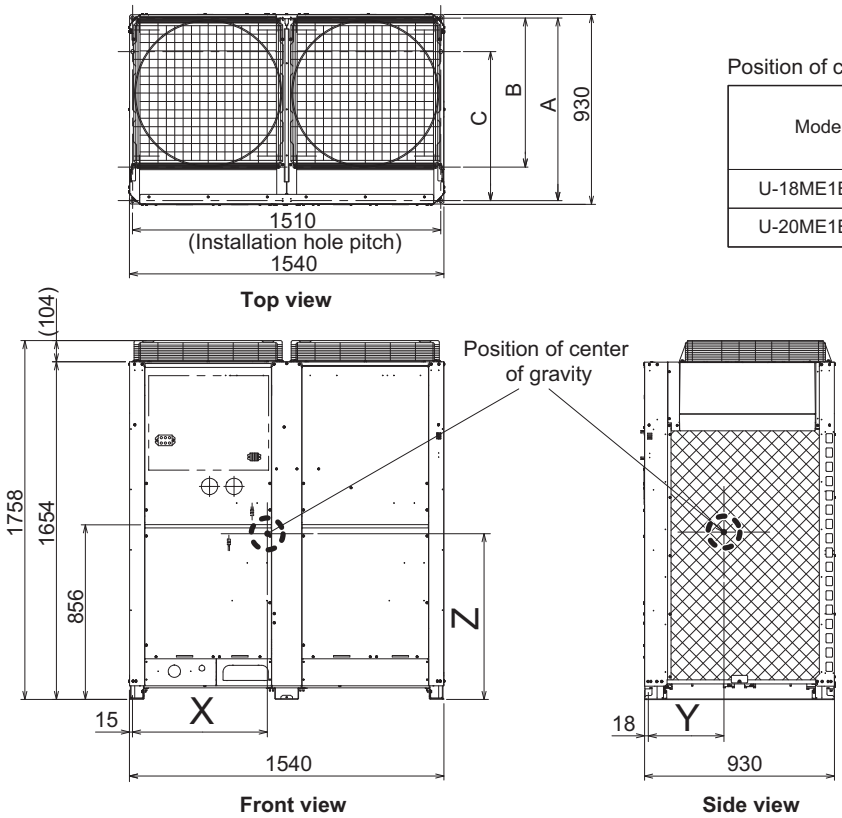

Position of center of gravity

Model	Position of center of gravity			Weight (kg)
	X	Y	Z	
U-18ME1E81	658	366	670	421
U-20ME1E81	658	366	670	421

- According to the installation site, you may choose the setting position in the depth direction of the anchor bolt from "A", "B" or "C".

A : 894 (Installation hole pitch) * The tubing is routed out from the front.
B : 730 (Installation hole pitch) * The tubing is routed out from the bottom.
C : 730 (Installation hole pitch)

4

1. Outdoor Unit

1-4. Refrigerant Flow Diagram

U-8ME1E81, U-10ME1E81

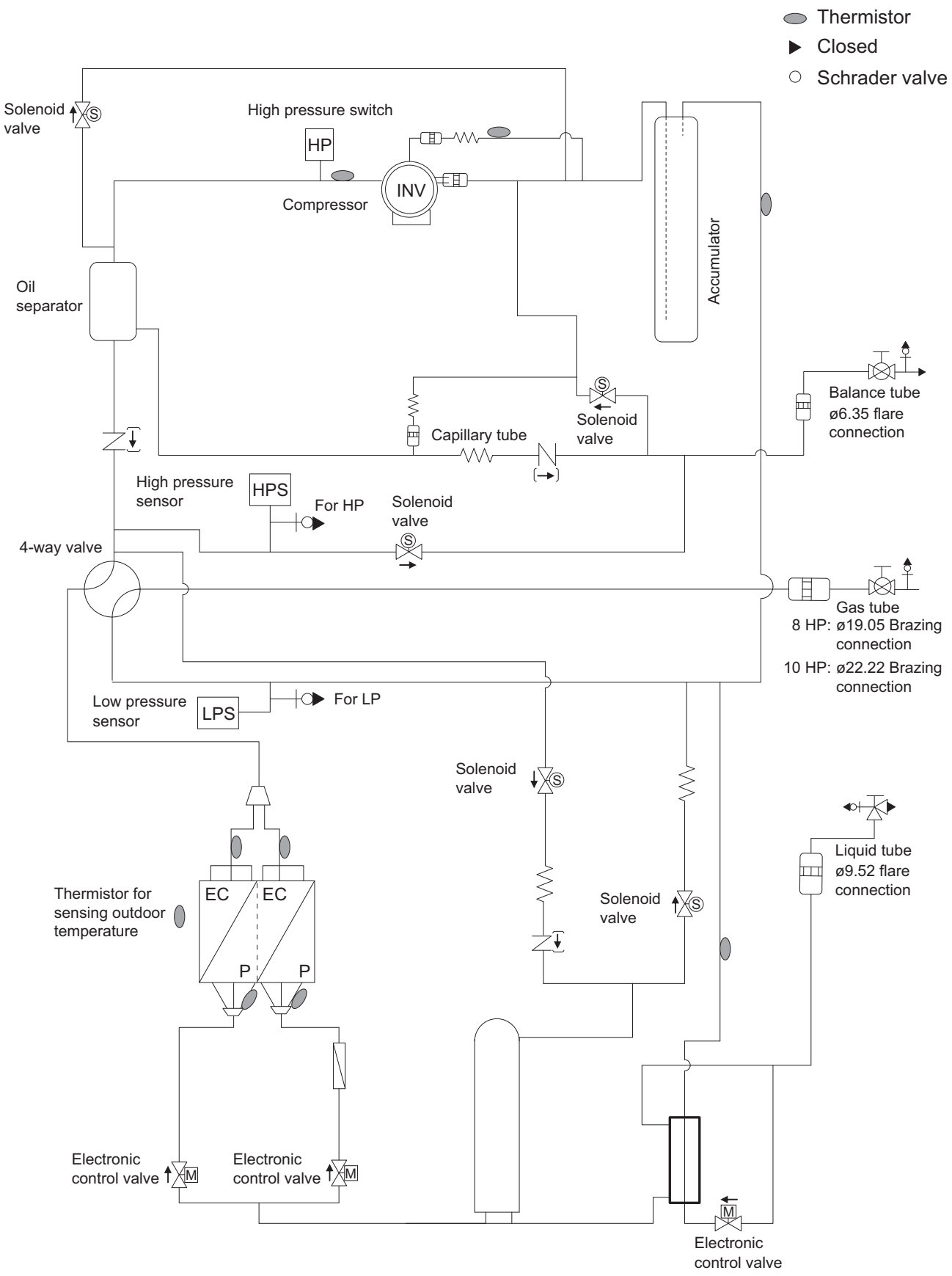

4

1. Outdoor Unit

U-12ME1E81

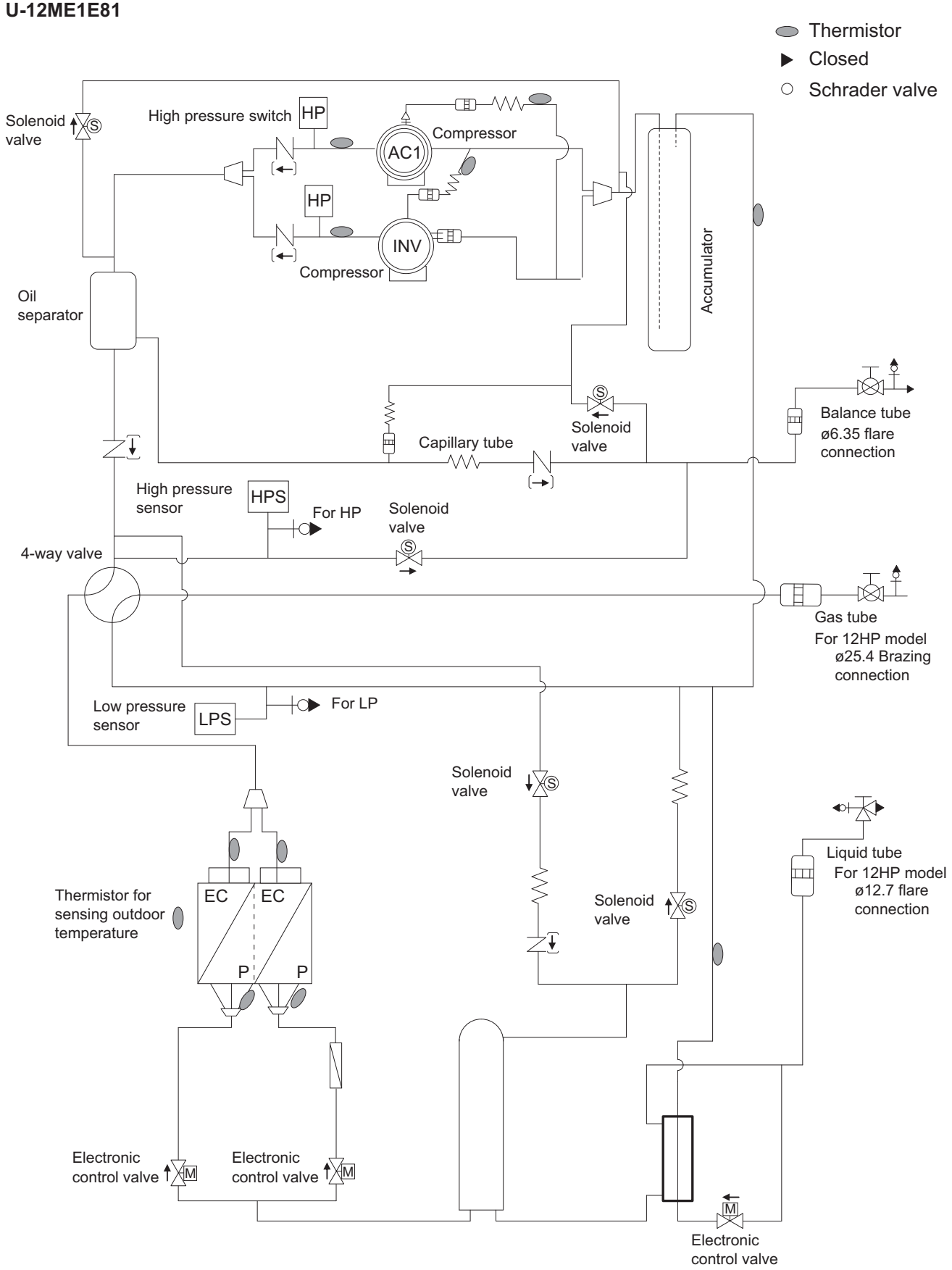

4

1. Outdoor Unit

U-14ME1E81, U-16ME1E81

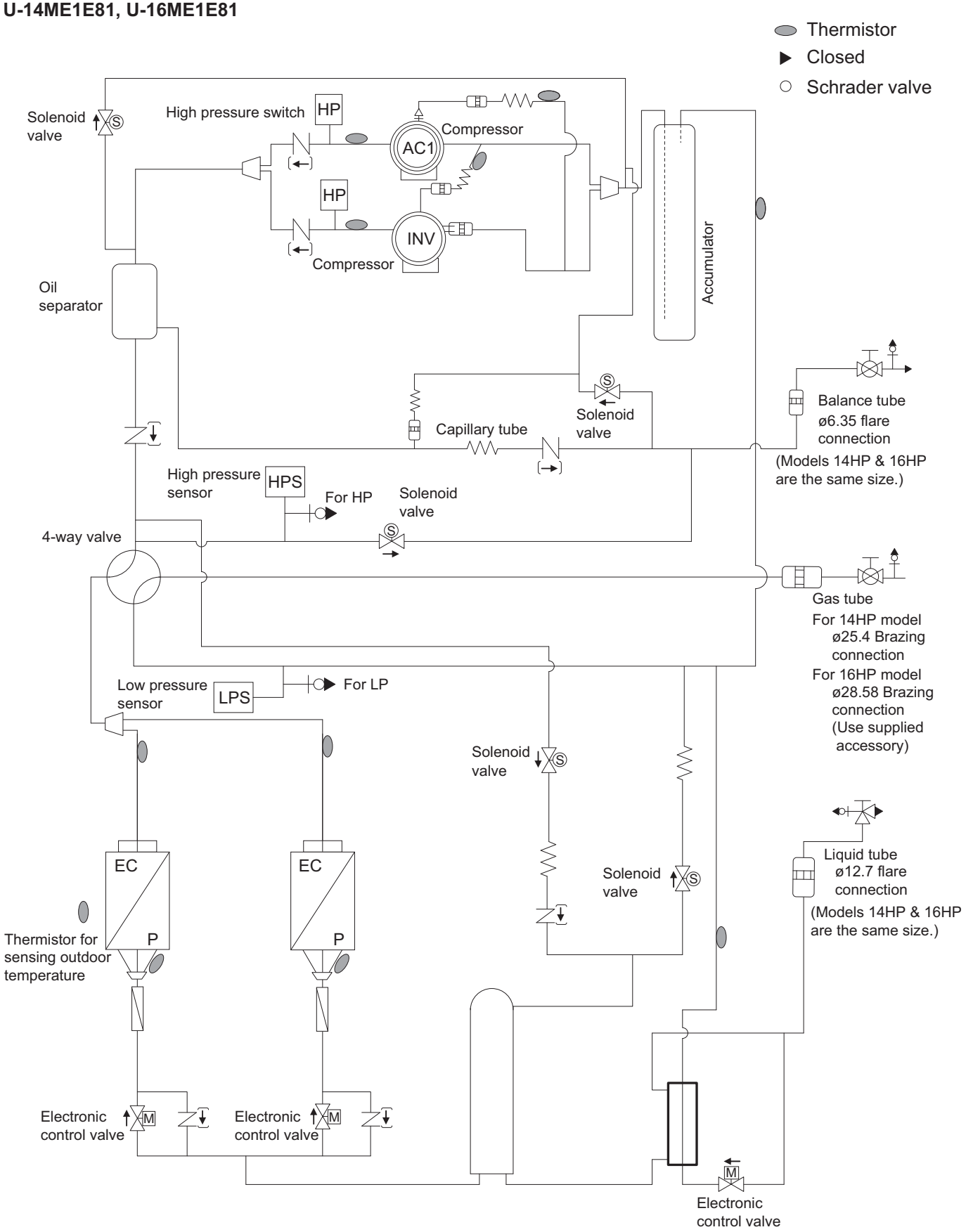

4

1. Outdoor Unit

U-18ME1E81, U-20ME1E81

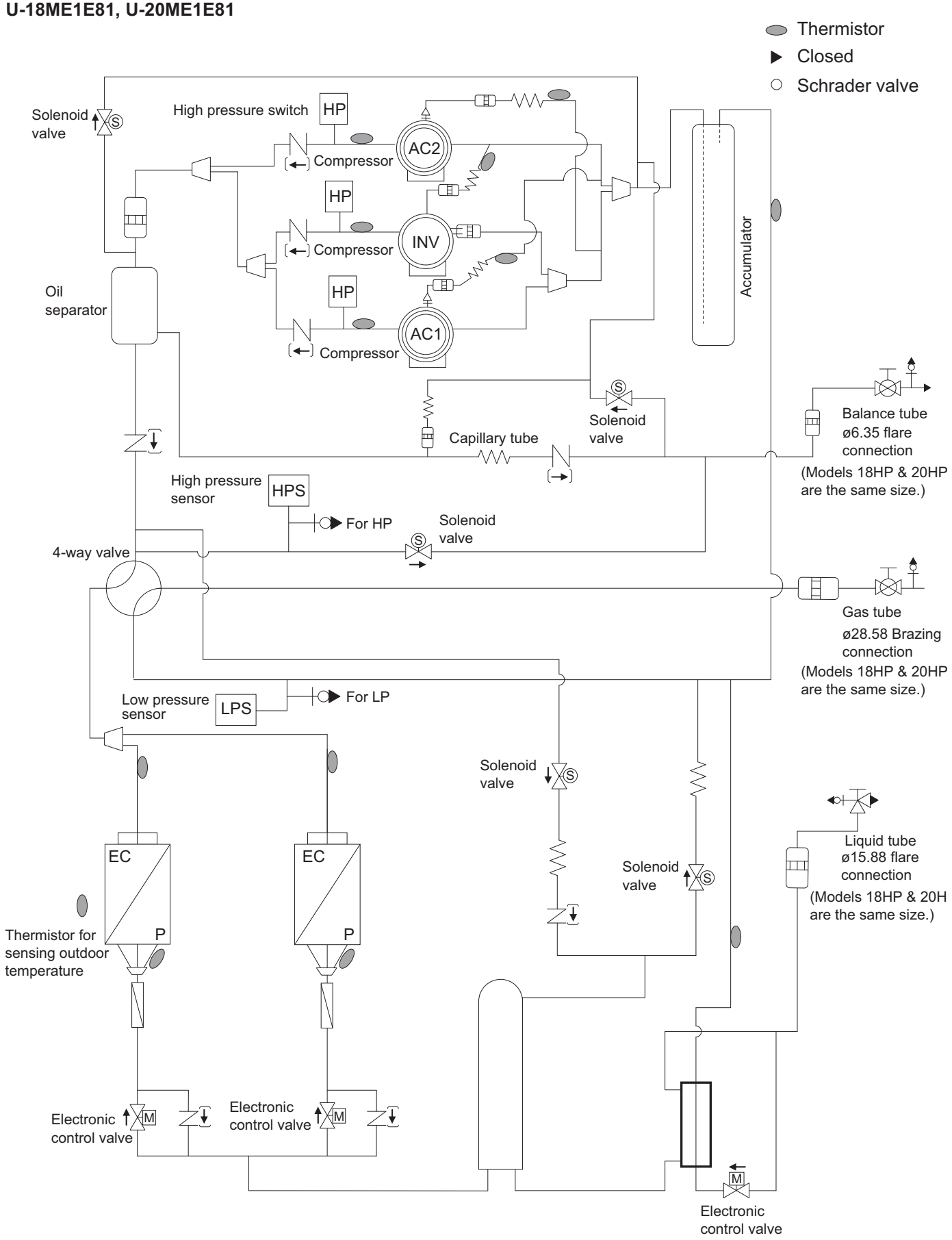

1. Outdoor Unit

1-5. Noise Criterion Curves

MODEL	U-8ME1E81
SOUND LEVEL dB(A) (Cooling/Heating)	56.5 (Quiet mode 53.5)
CONDITION	1 m in front at height of 1.5 m

50Hz
Standard mode
Quiet mode

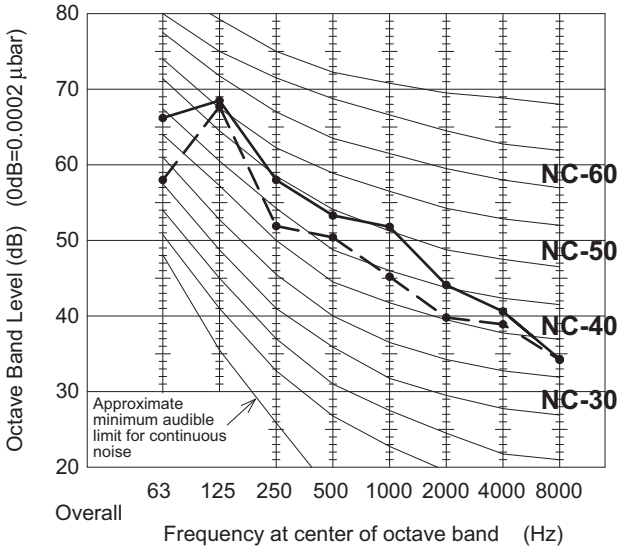

MODEL	U-10ME1E81
SOUND LEVEL dB(A) (Cooling/Heating)	59.0 (Quiet mode 56.0)
CONDITION	1 m in front at height of 1.5 m

50Hz
Standard mode
Quiet mode

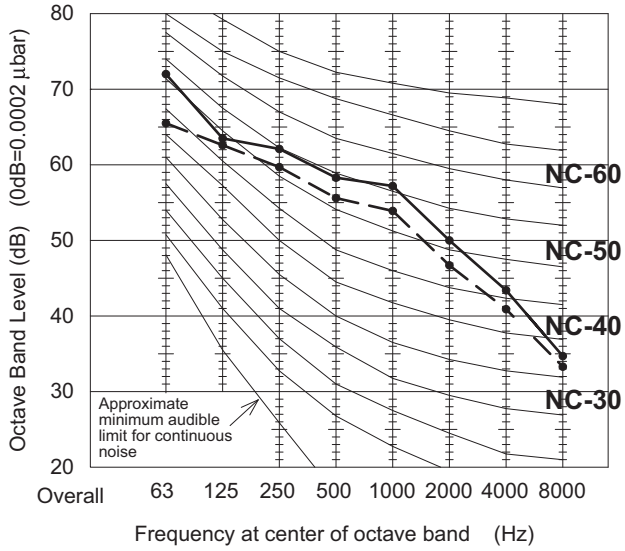

MODEL	U-12ME1E81
SOUND LEVEL dB(A) (Cooling/Heating)	61.0 (Quiet mode 58.0)
CONDITION	1 m in front at height of 1.5 m

50Hz
Standard mode
Quiet mode

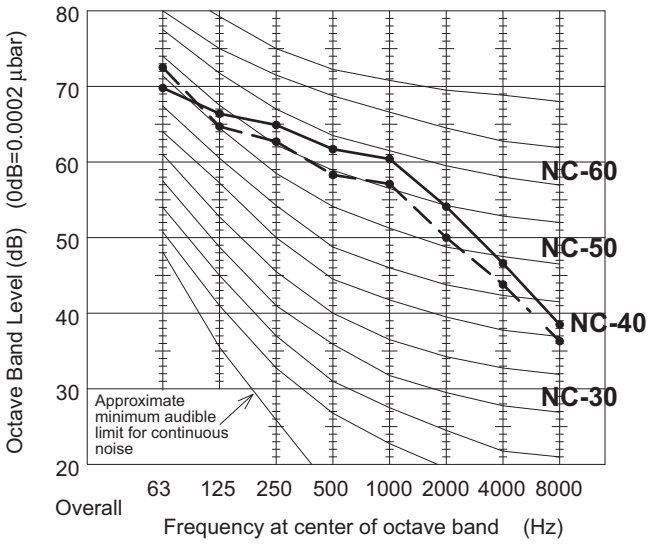

MODEL	U-14ME1E81
SOUND LEVEL dB(A) (Cooling/Heating)	62.0 (Quiet mode 59.0)
CONDITION	1 m in front at height of 1.5 m

50Hz
Standard mode
Quiet mode

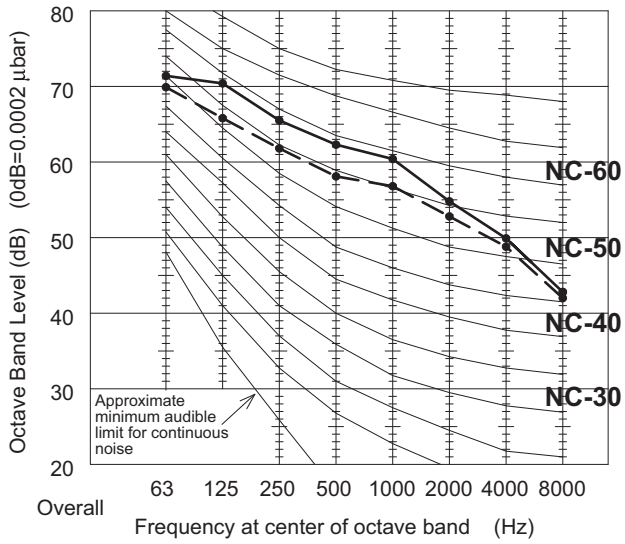

1. Outdoor Unit

1-5. Noise Criterion Curves (continued)

MODEL	U-16ME1E81
SOUND LEVEL dB(A) (Cooling/Heating)	62.0 (Quiet mode 59.0)
CONDITION	1 m in front at height of 1.5 m

50Hz
Standard mode
Quiet mode

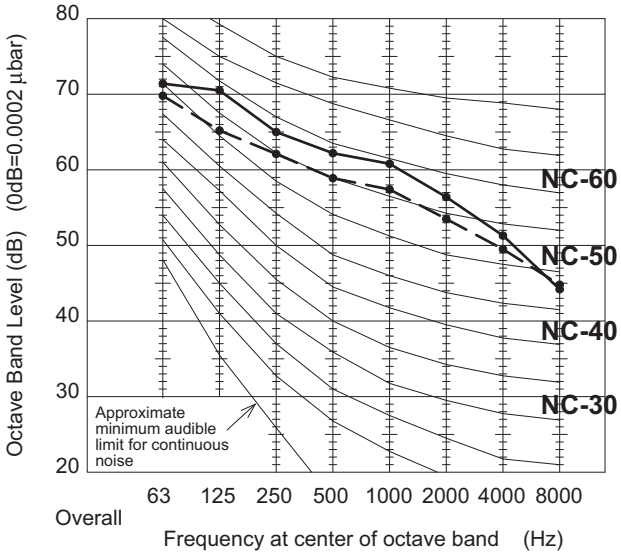

MODEL	U-18ME1E81
SOUND LEVEL dB(A) (Cooling/Heating)	60.0 (Quiet mode 57.0)
CONDITION	1 m in front at height of 1.5 m

50Hz
Standard mode
Quiet mode

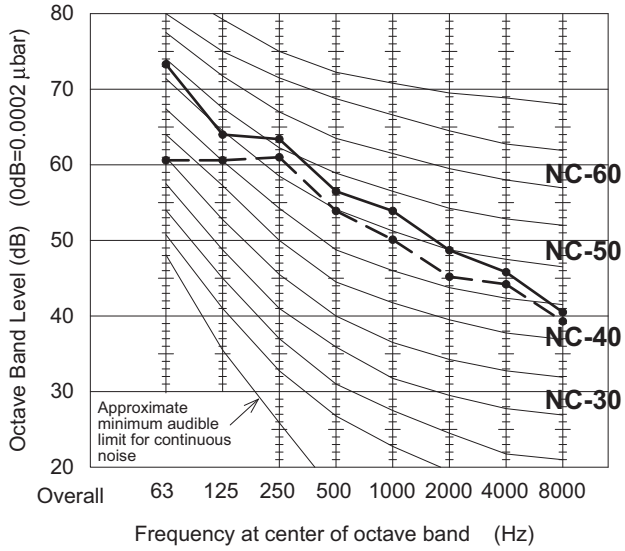

4

MODEL	U-20ME1E81
SOUND LEVEL dB(A) (Cooling/Heating)	63.0 (Quiet mode 60.0)
CONDITION	1 m in front at height of 1.5 m

50Hz
Standard mode
Quiet mode

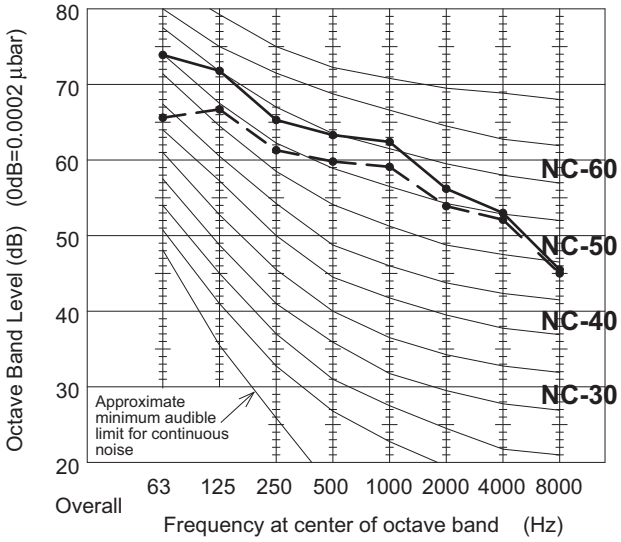

2. 4-Way Cassette Type (U1 Type)

2-1. Specifications

Unit specifications (A)

INDOOR		MODEL	S-22MU1E51			S-28MU1E51			S-36MU1E51		
PANEL		MODEL	CZ-KPU2			CZ-KPU2			CZ-KPU2		
PERFORMANCE TEST CONDITION			ISO5151 / AS/NZS3823.1			ISO5151 / AS/NZS3823.1			ISO5151 / AS/NZS3823.1		
POWER SUPPLY		ø, Hz	1ø 50Hz			1ø 50Hz			1ø 50Hz		
		V	220	230	240	220	230	240	220	230	240
COOLING	CAPACITY	kW	2.2	2.2	2.2	2.8	2.8	2.8	3.6	3.6	3.6
		BTU/h	7500	7500	7500	9600	9600	9600	12300	12300	12300
		kcal/h(Fri./h)	-	-	-	-	-	-	-	-	-
	CURRENT	A	0.19	0.19	0.18	0.19	0.19	0.18	0.19	0.19	0.18
	INPUT POWER	W	20	20	20	20	20	20	20	20	20
	ANNUAL CONSUMPTION	W *4	-	-	-	-	-	-	-	-	-
	EER/EER CLASS	(W/W)*5/("A"~"G")	-	-	-	-	-	-	-	-	-
	EER	BTU/hW	-	-	-	-	-	-	-	-	-
	POWER FACTOR	%	-	-	-	-	-	-	-	-	-
	NOISE INDOOR (H/M/L)	dB-A	30/29/28			30/29/28			30/29/28		
		Power Level dB	47/46/45			47/46/45			47/46/45		
	NOISE OUTDOOR (H/L)	dB-A	-			-			-		
		Power Level dB	-			-			-		
HEATING	CAPACITY	kW	2.5	2.5	2.5	3.2	3.2	3.2	4.2	4.2	4.2
		BTU/h	8500	8500	8500	10900	10900	10900	14300	14300	14300
		kcal/h(Fri./h)	-	-	-	-	-	-	-	-	-
	CURRENT	A	0.17	0.17	0.16	0.17	0.17	0.16	0.17	0.17	0.16
	INPUT POWER	W	20	20	20	20	20	20	20	20	20
	COP/COP CLASS	(W/W)*5/("A"~"G")	-	-	-	-	-	-	-	-	-
	COP	BTU/hW	-	-	-	-	-	-	-	-	-
	POWER FACTOR	%	-	-	-	-	-	-	-	-	-
	NOISE INDOOR (H/M/L)	dB-A	30/29/28			30/29/28			30/29/28		
		Power Level dB	47/46/45			47/46/45			47/46/45		
	NOISE OUTDOOR (H/L)	dB-A	-			-			-		
		Power Level dB	-			-			-		
EXTRA LOW TEMP	CAPACITY(kW)/INPUT POWER(W)/COP		-			-			-		
Cooling	MAX CURRENT(A)/MAX INPUT POWER(W)		0.19 / 20	0.19 / 20	0.18 / 20	0.19 / 20	0.19 / 20	0.18 / 20	0.19 / 20	0.19 / 20	0.18 / 20
Heating	MAX CURRENT(A)/MAX INPUT POWER(W)		0.17 / 20	0.17 / 20	0.16 / 20	0.17 / 20	0.17 / 20	0.16 / 20	0.17 / 20	0.17 / 20	0.16 / 20
STARTING CURRENT(A)/COMP OUTPUT(W)			-	-	-	-	-	-	-	-	-
NETWORK IMPEDANCE (ΩMAX.) *3			-			-			-		
FM OUTPUT (ID/OD) W			60 /			60 /			60 /		
MOISTURE REMOVAL VOLUME		L/h(Pt/h)	1.3		(2.7)	1.6		(3.4)	2.1		(4.4)
External static pressure		Pa	-			-			-		
I/D AIR FLOW	COOL	m^3/min (ft^3/min)	14 (494)			14 (494)			14 (494)		
	HEAT	m^3/min (ft^3/min)	14 (494)			14 (494)			14 (494)		
O/D AIR FLOW	COOL	m^3/min (ft^3/min)	-			-			-		
	HEAT	m^3/min (ft^3/min)	-			-			-		
REFRIGERANT TYPE, AMOUNT g(oz)			-			-			-		
PROD DIM	HEIGHT : H mm(inch)		256	(10-3/32)		256	(10-3/32)		256	(10-3/32)	
	WIDTH : W mm(inch)		840	(33-3/32)		840	(33-3/32)		840	(33-3/32)	
	DEPTH : D mm(inch)		840	(33-3/32)		840	(33-3/32)		840	(33-3/32)	
PAC DIM	HEIGHT : H mm		298			298			298		
	WIDTH : W mm		929			929			929		
	DEPTH : D mm		929			929			929		
MASS	(NET) kg(lb)		23	(51)		23	(51)		23	(51)	
	(GROSS) kg(lb)		29	(64)		29	(64)		29	(64)	
LAYERS LIMIT (actually)			11 (12)			11 (12)			11 (12)		
Operation Condition		Cool (DBT)	-			-			-		
		Heat (DBT)	-			-			-		
PIPING	PIPE DIAMETER mm (inch)		(Liquid) ø6.35 (1/4) (Gas) ø12.7 (1/2)			(Liquid) ø6.35 (1/4) (Gas) ø12.7 (1/2)			(Liquid) ø6.35 (1/4) (Gas) ø12.7 (1/2)		
	CONNECT METHOD, STD LENGTH m (ft)		flared type			flared type			flared type		
	PIPE LENGTH RANGE m (ft)		-		(~)	-		(~)	-		(~)
	I/D & O/D HEIGHT DIFFERENCE m (ft)		-		-	-		-	-		-
	ADD GAS AMOUNT g/m (oz/ft)		-		-	-		-	-		-
	PIPE LENGTH FOR ADDITIONAL GAS m (ft)		-		-	-		-	-		-

*3: Network Impedance shall be applicable for EUROPE and CHINA models.
*4: The annual consumption is calculated by multiplying the input power at 230V(400V) by an average of 500 hours per year in cooling mode.
*5: EER and COP classification is at 230V(400V) only in accordance with EU directive 2002/31/EC.
* : In case it is necessary to indicate the air flow volume in (l/s), the value in (m^3/min.) shall be multiplied by 16.7 and rounded down the decimal point.
* : If the EUROVENT Certified models can be operated under the "extra-low" temperature condition, -7°C dry bulb and -8°C wet-bulb temperatures with rated voltage 230V shall be used.

4

2. 4-Way Cassette Type (U1 Type)

2-1. Specifications

Unit specifications (B)

INDOOR		MODEL	S-45MU1E51			S-56MU1E51					
PANEL		MODEL	CZ-KPU2			CZ-KPU2					
PERFORMANCE TEST CONDITION			ISO5151 / AS/NZS3823.1			ISO5151 / AS/NZS3823.1					
POWER SUPPLY		ø, Hz	1ø 50Hz			1ø 50Hz					
		V	220	230	240	220	230	240			
COOLING	CAPACITY	kW	4.5	4.5	4.5	5.6	5.6	5.6			
		BTU/h	15400	15400	15400	19100	19100	19100			
		kcal/h(Fri./h)	-	-	-	-	-	-			
	CURRENT	A	0.19	0.19	0.19	0.22	0.22	0.21			
	INPUT POWER	W	20	20	20	25	25	25			
	ANNUAL CONSUMPTION	W *4	-	-	-	-	-	-			
	EER/EER CLASS	(W/W)*5/("A"~"G")	-	-	-	-	-	-			
	EER	BTU/hW	-	-	-	-	-	-			
	POWER FACTOR	%	-	-	-	-	-	-			
	NOISE INDOOR (H/M/L)	dB-A	31/29/28			33/30/28					
		Power Level dB	48/46/45			50/47/45					
	NOISE OUTDOOR (H/L)	dB-A	-			-					
		Power Level dB	-			-					
HEATING	CAPACITY	kW	5.0	5.0	5.0	6.3	6.3	6.3			
		BTU/h	17100	17100	17100	21500	21500	21500			
		kcal/h(Fri./h)	-	-	-	-	-	-			
	CURRENT	A	0.17	0.17	0.17	0.20	0.20	0.19			
	INPUT POWER	W	20	20	20	25	25	25			
	COP/COP CLASS	(W/W)*5/("A"~"G")	-	-	-	-	-	-			
	COP	BTU/hW	-	-	-	-	-	-			
	POWER FACTOR	%	-	-	-	-	-	-			
	NOISE INDOOR (H/M/L)	dB-A	31/29/28			33/30/28					
		Power Level dB	48/46/45			50/47/45					
	NOISE OUTDOOR (H/L)	dB-A	-			-					
		Power Level dB	-			-					
EXTRA LOW TEMP	CAPACITY(kW)/INPUT POWER(W)/COP		-			-					
Cooling	MAX CURRENT(A)/MAX INPUT POWER(W)		0.19 / 20	0.19 / 20	0.19 / 20	0.22 / 25	0.22 / 25	0.21 / 25			
Heating	MAX CURRENT(A)/MAX INPUT POWER(W)		0.17 / 20	0.17 / 20	0.17 / 20	0.20 / 25	0.20 / 25	0.19 / 25			
STARTING CURRENT(A)/COMP OUTPUT(W)			-	-	-	-	-	-			
NETWORK IMPEDANCE (ΩMAX.) *3			-			-					
FM OUTPUT (ID/OD) W			60 /			60 /					
MOISTURE REMOVAL VOLUME		L/h(Pt/h)	2.5		(5.3)	3.2		(6.7)			
External static pressure		Pa	-			-					
I/D AIR FLOW	COOL	m^3/min (ft^3/min)	15 (530)			16 (565)					
	HEAT	m^3/min (ft^3/min)	15 (530)			16 (565)					
O/D AIR FLOW	COOL	m^3/min (ft^3/min)	-			-					
	HEAT	m^3/min (ft^3/min)	-			-					
REFRIGERANT TYPE, AMOUNT g(oz)			-			-					
PROD DIM	HEIGHT : H mm(inch)		256	(10-3/32)		256	(10-3/32)				
	WIDTH : W mm(inch)		840	(33-3/32)		840	(33-3/32)				
	DEPTH : D mm(inch)		840	(33-3/32)		840	(33-3/32)				
PAC DIM	HEIGHT : H mm		298			298					
	WIDTH : W mm		929			929					
	DEPTH : D mm		929			929					
MASS	(NET) kg(lb)		23	(51)		23	(51)				
	(GROSS) kg(lb)		29	(64)		29	(64)				
LAYERS LIMIT (actually)			11 (12)			11 (12)					
Operation Condition		Cool (DBT)	-			-					
		Heat (DBT)	-			-					
PIPING	PIPE DIAMETER mm (inch)		(Liquid) ø6.35 (1/4) (Gas) ø12.7 (1/2)			(Liquid) ø6.35 (1/4) (Gas) ø12.7 (1/2)					
	CONNECT METHOD, STD LENGTH m (ft)		flared type			flared type					
	PIPE LENGTH RANGE m (ft)		-		(~)	-		(~)			
	I/D & O/D HEIGHT DIFFERENCE m (ft)		-		-	-		-			
	ADD GAS AMOUNT g/m (oz/ft)		-		-	-		-			
	PIPE LENGTH FOR ADDITIONAL GAS m (ft)		-		-	-		-			

*3: Network Impedance shall be applicable for EUROPE and CHINA models.
*4: The annual consumption is calculated by multiplying the input power at 230V(400V) by an average of 500 hours per year in cooling mode.
*5: EER and COP classification is at 230V(400V) only in accordance with EU directive 2002/31/EC.
* : In case it is necessary to indicate the air flow volume in (l/s), the value in (m^3/min.) shall be multiplied by 16.7 and rounded down the decimal point.
* : If the EUROVENT Certified models can be operated under the "extra-low" temperature condition, -7°C dry bulb and -8°C wet-bulb temperatures with rated voltage 230V shall be used.

2. 4-Way Cassette Type (U1 Type)

2-1. Specifications

Unit specifications (C)

INDOOR		MODEL	S-60MU1E51			S-73MU1E51			S-90MU1E51		
PANEL		MODEL	CZ-KPU2			CZ-KPU2			CZ-KPU2		
PERFORMANCE TEST CONDITION			ISO5151 / AS/NZS3823.1			ISO5151 / AS/NZS3823.1			ISO5151 / AS/NZS3823.1		
POWER SUPPLY		ø, Hz	1ø 50Hz			1ø 50Hz			1ø 50Hz		
		V	220	230	240	220	230	240	220	230	240
COOLING	CAPACITY	kW	6.0	6.0	6.0	7.3	7.3	7.3	9.0	9.0	9.0
		BTU/h	20500	20500	20500	24900	24900	24900	30700	30700	30700
		kcal/h(Fri./h)	-	-	-	-	-	-	-	-	-
	CURRENT	A	0.32	0.31	0.30	0.36	0.33	0.32	0.39	0.36	0.35
	INPUT POWER	W	35	35	35	40	40	40	40	40	40
	ANNUAL CONSUMPTION	W *4	-	-	-	-	-	-	-	-	-
	EER/EER CLASS	(W/W)*5/("A"~"G")	-	-	-	-	-	-	-	-	-
	EER	BTU/hW	-	-	-	-	-	-	-	-	-
	POWER FACTOR	%	-	-	-	-	-	-	-	-	-
	NOISE INDOOR (H/M/L)	dB-A	36/32/29			37/32/29			38/35/32		
		Power Level dB	53/49/46			54/49/46			55/52/49		
	NOISE OUTDOOR (H/L)	dB-A	-			-			-		
		Power Level dB	-			-			-		
HEATING	CAPACITY	kW	7.1	7.1	7.1	8.0	8.0	8.0	10.0	10.0	10.0
		BTU/h	24200	24200	24200	27300	27300	27300	34100	34100	34100
		kcal/h(Fri./h)	-	-	-	-	-	-	-	-	-
	CURRENT	A	0.30	0.30	0.29	0.35	0.32	0.31	0.37	0.34	0.33
	INPUT POWER	W	35	35	35	40	40	40	40	40	40
	COP/COP CLASS	(W/W)*5/("A"~"G")	-	-	-	-	-	-	-	-	-
	COP	BTU/hW	-	-	-	-	-	-	-	-	-
	POWER FACTOR	%	-	-	-	-	-	-	-	-	-
	NOISE INDOOR (H/M/L)	dB-A	36/32/29			37/32/29			38/35/32		
		Power Level dB	53/49/46			54/49/46			55/52/49		
	NOISE OUTDOOR (H/L)	dB-A	-			-			-		
		Power Level dB	-			-			-		
EXTRA LOW TEMP	CAPACITY(kW)/INPUT POWER(W)/COP		-			-			-		
Cooling	MAX CURRENT(A)/MAX INPUT POWER(W)		0.32 / 35	0.31 / 35	0.30 / 35	0.36 / 40	0.33 / 40	0.32 / 40	0.39 / 40	0.36 / 40	0.35 / 40
Heating	MAX CURRENT(A)/MAX INPUT POWER(W)		0.30 / 35	0.30 / 35	0.29 / 35	0.35 / 40	0.32 / 40	0.31 / 40	0.37 / 40	0.34 / 40	0.33 / 40
STARTING CURRENT(A)/COMP OUTPUT(W)			-	-	-	-	-	-	-	-	-
NETWORK IMPEDANCE (ΩMAX.) *3			-			-			-		
FM OUTPUT (ID/OD) W			60 /			60 /			60 /		
MOISTURE REMOVAL VOLUME		L/h(Pt/h)	3.4		(7.1)	4.4		(9.2)	5.4		(11.3)
External static pressure		Pa	-			-			-		
I/D AIR FLOW	COOL	m^3/min (ft^3/min)	21 (742)			22 (777)			23 (812)		
	HEAT	m^3/min (ft^3/min)	21 (742)			22 (777)			23 (812)		
O/D AIR FLOW	COOL	m^3/min (ft^3/min)	-			-			-		
	HEAT	m^3/min (ft^3/min)	-			-			-		
REFRIGERANT TYPE, AMOUNT g(oz)			-			-			-		
PROD	DIM	HEIGHT : H mm(inch)	256		(10-3/32)	256		(10-3/32)	256		(10-3/32)
		WIDTH : W mm(inch)	840		(33-3/32)	840		(33-3/32)	840		(33-3/32)
		DEPTH : D mm(inch)	840		(33-3/32)	840		(33-3/32)	840		(33-3/32)
PAC	DIM	HEIGHT : H mm	298			298			298		
		WIDTH : W mm	929			929			929		
		DEPTH : D mm	929			929			929		
MASS		(NET) kg(lb)	24		(53)	24		(53)	24		(53)
		(GROSS) kg(lb)	30		(67)	30		(67)	30		(67)
LAYERS LIMIT (actually)			11 (12)			11 (12)			11 (12)		
Operation Condition		Cool (DBT)	-			-			-		
		Heat (DBT)	-			-			-		
PIPING	PIPE DIAMETER mm (inch)		(Liquid) ø9.52 (3/8) (Gas) ø15.88 (5/8)			(Liquid) ø9.52 (3/8) (Gas) ø15.88 (5/8)			(Liquid) ø9.52 (3/8) (Gas) ø15.88 (5/8)		
	CONNECT METHOD, STD LENGTH m (ft)		flared type			flared type			flared type		
	PIPE LENGTH RANGE m (ft)		-		(~)	-		(~)	-		(~)
	I/D & O/D HEIGHT DIFFERENCE m (ft)		-		-	-		-	-		-
	ADD GAS AMOUNT g/m (oz/ft)		-		-	-		-	-		-
	PIPE LENGTH FOR ADDITIONAL GAS m (ft)		-		-	-		-	-		-

*3: Network Impedance shall be applicable for EUROPE and CHINA models.
*4: The annual consumption is calculated by multiplying the input power at 230V(400V) by an average of 500 hours per year in cooling mode.
*5: EER and COP classification is at 230V(400V) only in accordance with EU directive 2002/31/EC.
* : In case it is necessary to indicate the air flow volume in (l/s), the value in (m^3/min.) shall be multiplied by 16.7 and rounded down the decimal point.
* : If the EUROVENT Certified models can be operated under the "extra-low" temperature condition, -7°C dry bulb and -8°C wet-bulb temperatures with rated voltage 230V shall be used.

4

2. 4-Way Cassette Type (U1 Type)

2-1. Specifications

Unit specifications (D)

INDOOR		MODEL	S-106MU1E51			S-140MU1E51			S-160MU1E51		
PANEL		MODEL	CZ-KPU2			CZ-KPU2			CZ-KPU2		
PERFORMANCE TEST CONDITION			ISO5151 / AS/NZS3823.1			ISO5151 / AS/NZS3823.1			ISO5151 / AS/NZS3823.1		
POWER SUPPLY		ø, Hz	1ø 50Hz			1ø 50Hz			1ø 50Hz		
		V	220	230	240	220	230	240	220	230	240
COOLING	CAPACITY	kW	10.6	10.6	10.6	14.0	14.0	14.0	16.0	16.0	16.0
		BTU/h	36200	36200	36200	47800	47800	47800	54600	54600	54600
		kcal/h(Fri./h)	-	-	-	-	-	-	-	-	-
	CURRENT	A	0.73	0.71	0.71	0.77	0.76	0.73	0.90	0.89	0.87
	INPUT POWER	W	95	95	95	100	100	100	115	115	115
	ANNUAL CONSUMPTION	W *4	-	-	-	-	-	-	-	-	-
	EER/EER CLASS	(W/W)*5/("A"~"G")	-	-	-	-	-	-	-	-	-
	EER	BTU/hW	-	-	-	-	-	-	-	-	-
	POWER FACTOR	%	-	-	-	-	-	-	-	-	-
	NOISE INDOOR (H/M/L)	dB-A	44/38/34			45/39/35			46/40/38		
		Power Level dB	61/55/51			62/55/51			63/56/53		
	NOISE OUTDOOR (H/L)	dB-A	-			-			-		
		Power Level dB	-			-			-		
HEATING	CAPACITY	kW	11.4	11.4	11.4	16.0	16.0	16.0	18.0	18.0	18.0
		BTU/h	38900	38900	38900	54600	54600	54600	61400	61400	61400
		kcal/h(Fri./h)	-	-	-	-	-	-	-	-	-
	CURRENT	A	0.66	0.65	0.64	0.75	0.73	0.73	0.83	0.80	0.79
	INPUT POWER	W	85	85	85	100	100	100	105	105	105
	COP/COP CLASS	(W/W)*5/("A"~"G")	-	-	-	-	-	-	-	-	-
	COP	BTU/hW	-	-	-	-	-	-	-	-	-
	POWER FACTOR	%	-	-	-	-	-	-	-	-	-
	NOISE INDOOR (H/M/L)	dB-A	44/38/34			45/39/35			46/40/38		
		Power Level dB	61/55/51			62/55/51			63/56/53		
	NOISE OUTDOOR (H/L)	dB-A	-			-			-		
		Power Level dB	-			-			-		
EXTRA LOW TEMP	CAPACITY(kW)/INPUT POWER(W)/COP		-			-			-		
Cooling	MAX CURRENT(A)/MAX INPUT POWER(W)		0.73 / 95	0.71 / 95	0.71 / 95	0.77 / 100	0.76 / 100	0.73 / 100	0.90 / 115	0.89 / 115	0.87 / 115
Heating	MAX CURRENT(A)/MAX INPUT POWER(W)		0.66 / 85	0.65 / 85	0.64 / 85	0.75 / 100	0.73 / 100	0.73 / 100	0.83 / 105	0.80 / 105	0.79 / 105
STARTING CURRENT(A)/COMP OUTPUT(W)			-	-	-	-	-	-	-	-	-
NETWORK IMPEDANCE (ΩMAX.) *3			-			-			-		
FM OUTPUT (ID/OD) W			90 /			90 /			90 /		
MOISTURE REMOVAL VOLUME		L/h(Pt/h)	6.4		(13.4)	9.0		(18.9)	10.7		(22.5)
External static pressure		Pa	-			-			-		
I/D AIR FLOW	COOL	m^3/min (ft^3/min)	33 (1165)			35 (1236)			36 (1271)		
	HEAT	m^3/min (ft^3/min)	33 (1165)			35 (1236)			36 (1271)		
O/D AIR FLOW	COOL	m^3/min (ft^3/min)	-			-			-		
	HEAT	m^3/min (ft^3/min)	-			-			-		
REFRIGERANT TYPE, AMOUNT g(oz)			-			-			-		
PROD DIM	HEIGHT : H mm(inch)		319	(12-9/16)		319	(12-9/16)		319	(12-9/16)	
	WIDTH : W mm(inch)		840	(33-5/64)		840	(33-5/64)		840	(33-5/64)	
	DEPTH : D mm(inch)		840	(33-5/64)		840	(33-5/64)		840	(33-5/64)	
PAC DIM	HEIGHT : H mm		361			361			361		
	WIDTH : W mm		929			929			929		
	DEPTH : D mm		929			929			929		
MASS	(NET) kg(lb)		27	(60)		27	(60)		27	(60)	
	(GROSS) kg(lb)		34	(75)		34	(75)		34	(75)	
LAYERS LIMIT (actually)			11 (12)			11 (12)			11 (12)		
Operation Condition		Cool (DBT)	-			-			-		
		Heat (DBT)	-			-			-		
PIPING	PIPE DIAMETER mm (inch)		(Liquid) ø9.52 (3/8) (Gas) ø15.88 (5/8)			(Liquid) ø9.52 (3/8) (Gas) ø15.88 (5/8)			(Liquid) ø9.52 (3/8) (Gas) ø15.88 (5/8)		
	CONNECT METHOD, STD LENGTH m (ft)		flared type			flared type			flared type		
	PIPE LENGTH RANGE m (ft)		-		(~)	-		(~)	-		(~)
	I/D & O/D HEIGHT DIFFERENCE m (ft)		-		-	-		-	-		-
	ADD GAS AMOUNT g/m (oz/ft)		-		-	-		-	-		-
	PIPE LENGTH FOR ADDITIONAL GAS m (ft)		-		-	-		-	-		-

*3: Network Impedance shall be applicable for EUROPE and CHINA models.
*4: The annual consumption is calculated by multiplying the input power at 230V(400V) by an average of 500 hours per year in cooling mode.
*5: EER and COP classification is at 230V(400V) only in accordance with EU directive 2002/31/EC.
* : In case it is necessary to indicate the air flow volume in (l/s), the value in (m^3/min.) shall be multiplied by 16.7 and rounded down the decimal point.
* : If the EUROVENT Certified models can be operated under the "extra-low" temperature condition, -7°C dry bulb and -8°C wet-bulb temperatures with rated voltage 230V shall be used.

2. 4-Way Cassette Type (U1 Type)

2-2. Major Component Specifications

Indoor unit (A)

MODEL No.			S-22MU1E51
Power source			220 - 230 - 240 V, single-phase, 50 Hz
Controller P.C.B. Ass'y			A73C5891 (Microprocessor)
Fan (Number...diameter)		mm	Turbo (1...ø490)
Fan motor			
	Model...Nominal output	W	SIC-62FW-D866-1...60 W
	Power source		280 VDC
	No. of pole...r.p.m. (230V)	rpm	8P...320
	Run capacitor	VAC, μF	–
Safety device			overcurrent, rotating signal detection, fuse
Electronic expansion valve			
	Coil		UKV-A152
	Coil resistance (at 20°C)	Ω	ORG – GRY : 46 YEL – GRY : 46 RED – GRY : 46 BLK – GRY : 46
	Valve body		UKV-18D31
Heat exchanger			
	Coil		Aluminium plate fin / Copper tube
	Rows...fin pitch	mm	2...1.21
	Face area	m^2	0.348
Panel			
	Model No.		CZ-KPU2
	Auto louver motor		MSBPC20A10
	Coil resistance	Ω	300 Ω ± 7% / phase
Drain pump			PMD-12D13ST-1
	Rated	V, W	DC 13 V, 4.2 W
	Drain piping rise height from unit bottom, capacity		850 mm, 400 cc/min

4

2. 4-Way Cassette Type (U1 Type)

Indoor unit (B)

MODEL No.			**S-28MU1E51**
Power source			220 - 230 - 240 V, single-phase, 50 Hz
Controller P.C.B. Ass'y			A73C5892 (Microprocessor)
Fan (Number...diameter)		mm	Turbo (1...ø490)
Fan motor			
	Model...Nominal output	W	SIC-62FW-D866-1...60 W
	Power source		280 VDC
	No. of pole...r.p.m. (230V)	rpm	8P...320
	Run capacitor	VAC, μF	–
Safety device			overcurrent, rotating signal detection, fuse
Electronic expansion valve			
	Coil		UKV-A152
	Coil resistance (at 20°C)	Ω	ORG – GRY : 46 YEL – GRY : 46 RED – GRY : 46 BLK – GRY : 46
	Valve body		UKV-18D31
Heat exchanger			
	Coil		Aluminium plate fin / Copper tube
	Rows...fin pitch	mm	2...1.21
	Face area	m^2	0.348
Panel			
	Model No.		CZ-KPU2
	Auto louver motor		MSBPC20A10
	Coil resistance	Ω	300 Ω ± 7% / phase
Drain pump			PMD-12D13ST-1
	Rated	V, W	DC 13 V, 4.2 W
	Drain piping rise height from unit bottom, capacity		850 mm, 400 cc/min

2. 4-Way Cassette Type (U1 Type)

Indoor unit (C)

MODEL No.			**S-36MU1E51**
Power source			220 - 230 - 240 V, single-phase, 50 Hz
Controller P.C.B. Ass'y			A73C5893 (Microprocessor)
Fan (Number...diameter)		mm	Turbo (1...ø490)
Fan motor			
	Model...Nominal output	W	SIC-62FW-D866-1...60 W
	Power source		280 VDC
	No. of pole...r.p.m. (230V)	rpm	8P...320
	Run capacitor	VAC, μF	–
Safety device			overcurrent, rotating signal detection, fuse
Electronic expansion valve			
	Coil		UKV-A152
	Coil resistance (at 20°C)	Ω	ORG – GRY : 46 YEL – GRY : 46 RED – GRY : 46 BLK – GRY : 46
	Valve body		UKV-18D31
Heat exchanger			
	Coil		Aluminium plate fin / Copper tube
	Rows...fin pitch	mm	2...1.21
	Face area	m^2	0.348
Panel			
	Model No.		CZ-KPU2
	Auto louver motor		MSBPC20A10
	Coil resistance	Ω	300 Ω ± 7% / phase
Drain pump			PMD-12D13ST-1
	Rated	V, W	DC 13 V, 4.2 W
	Drain piping rise height from unit bottom, capacity		850 mm, 400 cc/min

4

2. 4-Way Cassette Type (U1 Type)

Indoor unit (D)

MODEL No.			**S-45MU1E51**
Power source			220 - 230 - 240 V, single-phase, 50 Hz
Controller P.C.B. Ass'y			A73C5894 (Microprocessor)
Fan (Number...diameter)		mm	Turbo (1...ø490)
Fan motor			
	Model...Nominal output	W	SIC-62FW-D866-1...60 W
	Power source		280 VDC
	No. of pole...r.p.m. (230V)	rpm	8P...340
	Run capacitor	VAC, μF	–
Safety device			overcurrent, rotating signal detection, fuse
Electronic expansion valve			
	Coil		UKV-A152
	Coil resistance (at 20°C)	Ω	ORG – GRY : 46 YEL – GRY : 46 RED – GRY : 46 BLK – GRY : 46
	Valve body		UKV-25D32
Heat exchanger			
	Coil		Aluminium plate fin / Copper tube
	Rows...fin pitch	mm	2...1.21
	Face area	m^2	0.348
Panel			
	Model No.		CZ-KPU2
	Auto louver motor		MSBPC20A10
	Coil resistance	Ω	300 Ω ± 7% / phase
Drain pump			PMD-12D13ST-1
	Rated	V, W	DC 13 V, 4.2 W
	Drain piping rise height from unit bottom, capacity		850 mm, 400 cc/min

2. 4-Way Cassette Type (U1 Type)

Indoor unit (E)

MODEL No.			**S-56MU1E51**
Power source			220 - 230 - 240 V, single-phase, 50 Hz
Controller P.C.B. Ass'y			A73C5895 (Microprocessor)
Fan (Number...diameter)		mm	Turbo (1...ø490)
Fan motor			
	Model...Nominal output	W	SIC-62FW-D866-1...60 W
	Power source		280 VDC
	No. of pole...r.p.m. (230V)	rpm	8P...360
	Run capacitor	VAC, μF	–
Safety device			overcurrent, rotating signal detection, fuse
Electronic expansion valve			
	Coil		UKV-A152
	Coil resistance (at 20°C)	Ω	ORG – GRY : 46 YEL – GRY : 46 RED – GRY : 46 BLK – GRY : 46
	Valve body		UKV-25D32
Heat exchanger			
	Coil		Aluminium plate fin / Copper tube
	Rows...fin pitch	mm	2...1.21
	Face area	m^2	0.348
Panel			
	Model No.		CZ-KPU2
	Auto louver motor		MSBPC20A10
	Coil resistance	Ω	300 Ω ± 7% / phase
Drain pump			PMD-12D13ST-1
	Rated	V, W	DC 13 V, 4.2 W
	Drain piping rise height from unit bottom, capacity		850 mm, 400 cc/min

4

2. 4-Way Cassette Type (U1 Type)

Indoor unit (F)

MODEL No.			**S-60MU1E51**
Power source			220 - 230 - 240 V, single-phase, 50 Hz
Controller P.C.B. Ass'y			A73C5896 (Microprocessor)
Fan (Number...diameter)		mm	Turbo (1...ø490)
Fan motor			
	Model...Nominal output	W	SIC-62FW-D866-1...60 W
	Power source		280 VDC
	No. of pole...r.p.m. (230V)	rpm	8P...430
	Run capacitor	VAC, μF	–
Safety device			overcurrent, rotating signal detection, fuse
Electronic expansion valve			
	Coil		UKV-A152
	Coil resistance (at 20°C)	Ω	ORG – GRY : 46 YEL – GRY : 46 RED – GRY : 46 BLK – GRY : 46
	Valve body		UKV-25D32
Heat exchanger			
	Coil		Aluminium plate fin / Copper tube
	Rows...fin pitch	mm	2...1.21
	Face area	m^2	0.391
Panel			
	Model No.		CZ-KPU2
	Auto louver motor		MSBPC20A10
	Coil resistance	Ω	300 Ω ± 7% / phase
Drain pump			PMD-12D13ST-1
	Rated	V, W	DC 13 V, 4.2 W
	Drain piping rise height from unit bottom, capacity		850 mm, 400 cc/min

2. 4-Way Cassette Type (U1 Type)

Indoor unit (G)

MODEL No.			**S-73MU1E51**
Power source			220 - 230 - 240 V, single-phase, 50 Hz
Controller P.C.B. Ass'y			A73C5897 (Microprocessor)
Fan (Number...diameter)		mm	Turbo (1...ø490)
Fan motor			
	Model...Nominal output	W	SIC-62FW-D866-1...60 W
	Power source		280 VDC
	No. of pole...r.p.m. (230V)	rpm	8P...450
	Run capacitor	VAC, μF	–
Safety device			overcurrent, rotating signal detection, fuse
Electronic expansion valve			
	Coil		UKV-A152
	Coil resistance (at 20°C)	Ω	ORG – GRY : 46 YEL – GRY : 46 RED – GRY : 46 BLK – GRY : 46
	Valve body		UKV-25D32
Heat exchanger			
	Coil		Aluminium plate fin / Copper tube
	Rows...fin pitch	mm	2...1.21
	Face area	m^2	0.391
Panel			
	Model No.		CZ-KPU2
	Auto louver motor		MSBPC20A10
	Coil resistance	Ω	300 Ω ± 7% / phase
Drain pump			PMD-12D13ST-1
	Rated	V, W	DC 13 V, 4.2 W
	Drain piping rise height from unit bottom, capacity		850 mm, 400 cc/min

4

2. 4-Way Cassette Type (U1 Type)

Indoor unit (H)

MODEL No.			**S-90MU1E51**
Power source			220 - 230 - 240 V, single-phase, 50 Hz
Controller P.C.B. Ass'y			A73C6438 (Microprocessor)
Fan (Number...diameter)		mm	Turbo (1...ø490)
Fan motor			
	Model...Nominal output	W	SIC-62FW-D866-1...60 W
	Power source		280 VDC
	No. of pole...r.p.m. (230V)	rpm	8P...460
	Run capacitor	VAC, μF	–
Safety device			overcurrent, rotating signal detection, fuse
Electronic expansion valve			
	Coil		UKV-A152
	Coil resistance (at 20°C)	Ω	ORG – GRY : 46 YEL – GRY : 46 RED – GRY : 46 BLK – GRY : 46
	Valve body		UKV-30D33
Heat exchanger			
	Coil		Aluminium plate fin / Copper tube
	Rows...fin pitch	mm	2...1.21
	Face area	m^2	0.391
Panel			
	Model No.		CZ-KPU2
	Auto louver motor		MSBPC20A10
	Coil resistance	Ω	300 Ω ± 7% / phase
Drain pump			PMD-12D13ST-1
	Rated	V, W	DC 13 V, 4.2 W
	Drain piping rise height from unit bottom, capacity		850 mm, 400 cc/min

4

2. 4-Way Cassette Type (U1 Type)

Indoor unit (I)

MODEL No.			**S-106MU1E51**
Power source			220 - 230 - 240 V, single-phase, 50 Hz
Controller P.C.B. Ass'y			A73C5898 (Microprocessor)
Fan (Number...diameter)		mm	Turbo (1...ø490)
Fan motor			
	Model...Nominal output	W	SIC-72FW-D892-4...90 W
	Power source		280 VDC
	No. of pole...r.p.m. (230V)	rpm	8P...590
	Run capacitor	VAC, μF	–
Safety device			overcurrent, rotating signal detection, fuse
Electronic expansion valve			
	Coil		UKV-A152
	Coil resistance (at 20°C)	Ω	ORG – GRY : 46 YEL – GRY : 46 RED – GRY : 46 BLK – GRY : 46
	Valve body		UKV-30D33
Heat exchanger			
	Coil		Aluminium plate fin / Copper tube
	Rows...fin pitch	mm	2...1.21
	Face area	m^2	0.522
Panel			
	Model No.		CZ-KPU2
	Auto louver motor		MSBPC20A10
	Coil resistance	Ω	300 Ω ± 7% / phase
Drain pump			PMD-12D13ST-1
	Rated	V, W	DC 13 V, 4.2 W
	Drain piping rise height from unit bottom, capacity		850 mm, 400 cc/min

4

2. 4-Way Cassette Type (U1 Type)

Indoor unit (J)

MODEL No.			**S-140MU1E51**
Power source			220 - 230 - 240 V, single-phase, 50 Hz
Controller P.C.B. Ass'y			A73C5899 (Microprocessor)
Fan (Number...diameter)		mm	Turbo (1...ø490)
Fan motor			
	Model...Nominal output	W	SIC-72FW-D892-4...90 W
	Power source		280 VDC
	No. of pole...r.p.m. (230V)	rpm	8P...610
	Run capacitor	VAC, μF	–
Safety device			overcurrent, rotating signal detection, fuse
Electronic expansion valve			
	Coil		UKV-A152
	Coil resistance (at 20°C)	Ω	ORG – GRY : 46 YEL – GRY : 46 RED – GRY : 46 BLK – GRY : 46
	Valve body		UKV-30D33
Heat exchanger			
	Coil		Aluminium plate fin / Copper tube
	Rows...fin pitch	mm	2...1.21
	Face area	m^2	0.522
Panel			
	Model No.		CZ-KPU2
	Auto louver motor		MSBPC20A10
	Coil resistance	Ω	300 Ω ± 7% / phase
Drain pump			PMD-12D13ST-1
	Rated	V, W	DC 13 V, 4.2 W
	Drain piping rise height from unit bottom, capacity		850 mm, 400 cc/min

2. 4-Way Cassette Type (U1 Type)

Indoor unit (K)

MODEL No.			**S-160MU1E51**
Power source			220 - 230 - 240 V, single-phase, 50 Hz
Controller P.C.B. Ass'y			A73C5900 (Microprocessor)
Fan (Number...diameter)		mm	Turbo (1...ø490)
Fan motor			
	Model...Nominal output	W	SIC-72FW-D892-4...90 W
	Power source		280 VDC
	No. of pole...r.p.m. (230V)	rpm	8P...630
	Run capacitor	VAC, μF	–
Safety device			overcurrent, rotating signal detection, fuse
Electronic expansion valve			
	Coil		UKV-A152
	Coil resistance (at 20°C)	Ω	ORG – GRY : 46 YEL – GRY : 46 RED – GRY : 46 BLK – GRY : 46
	Valve body		UKV-30D33
Heat exchanger			
	Coil		Aluminium plate fin / Copper tube
	Rows...fin pitch	mm	2...1.21
	Face area	m^2	0.522
Panel			
	Model No.		CZ-KPU2
	Auto louver motor		MSBPC20A10
	Coil resistance	Ω	300 Ω ± 7% / phase
Drain pump			PMD-12D13ST-1
	Rated	V, W	DC 13 V, 4.2 W
	Drain piping rise height from unit bottom, capacity		850 mm, 400 cc/min

2. 4-Way Cassette Type (U1 Type)

2-3. Dimensional Data

Indoor unit : S-22MU1E51/28MU1E51/36MU1E51/45MU1E51/56MU1E51

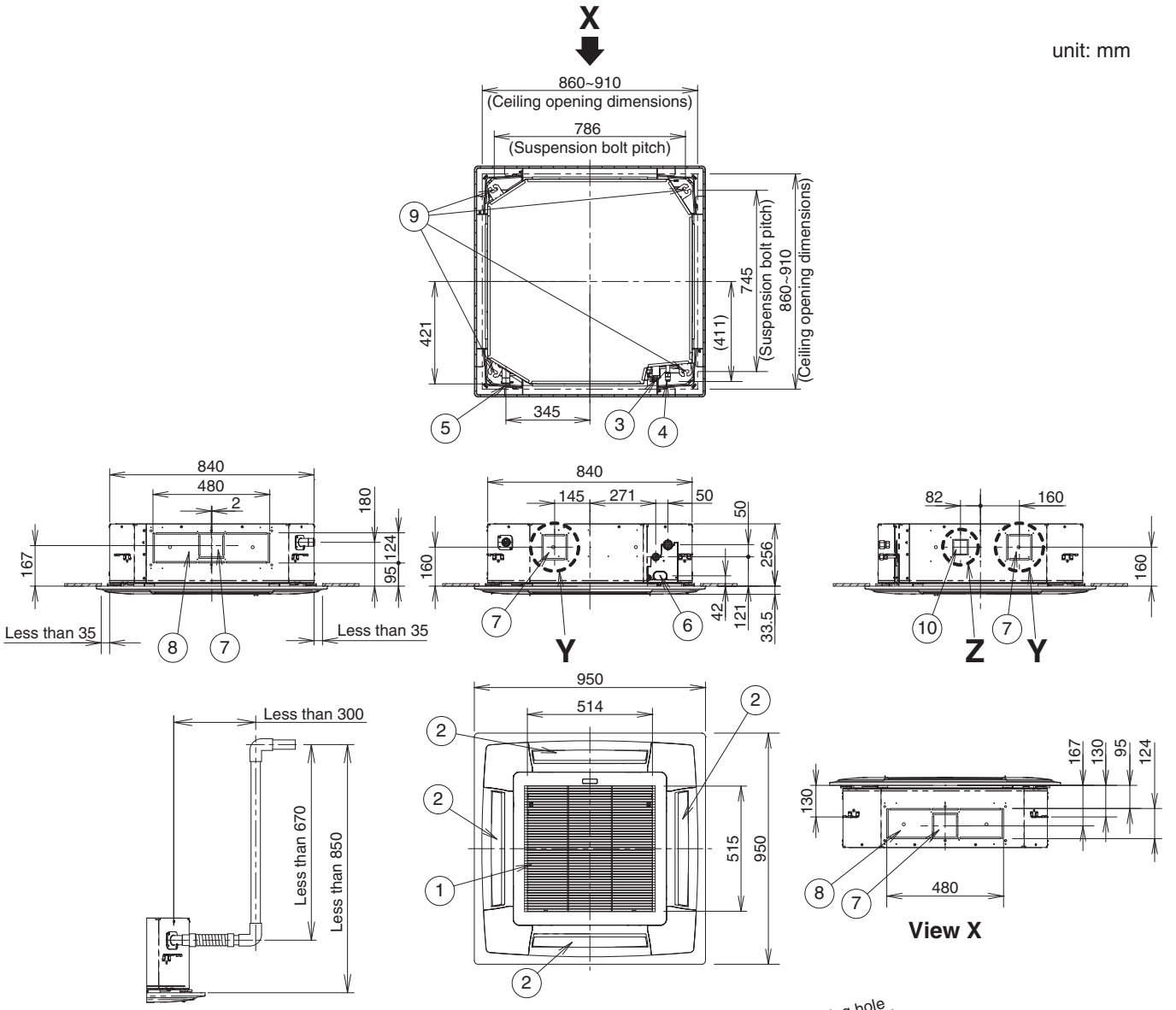

Raise dimension of drain tube

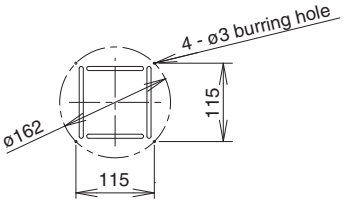

Detailed view Y

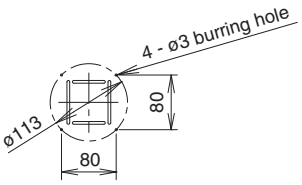

Detailed view Z

①	Air intake
②	Discharge outlet
③	Refrigerant tubing (liquid tube) ø6.35 (flared)
④	Refrigerant tubing (gas tube) ø12.7 (flared)
⑤	Drain tube connection port VP25 (outer dia.ø32)
⑥	Power supply port
⑦	Discharge duct connection port (ø150)
⑧	Vaporizing-type humidifier (optional) installation area
⑨	Suspension bolt hole (4-12 × 30 elongated hole)
⑩	Fresh air intake duct connection port (ø100) *

* Necessary to provide optional air intake kit.

* The length of the suspension bolts should be selected so that there is a gap of 30 mm or more below the lower surface of the ceiling (18 mm or more below the lower surface of the main unit), as shown in the figure at right. If the suspension bolt is too long, it will contact the ceiling panel and the unit cannot be installed.

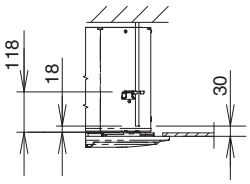

<Filter dimension>

520 x 520 x 16

2. 4-Way Cassette Type (U1 Type)

Indoor unit : S-60MU1E51/73MU1E51/90MU1E51

unit: mm

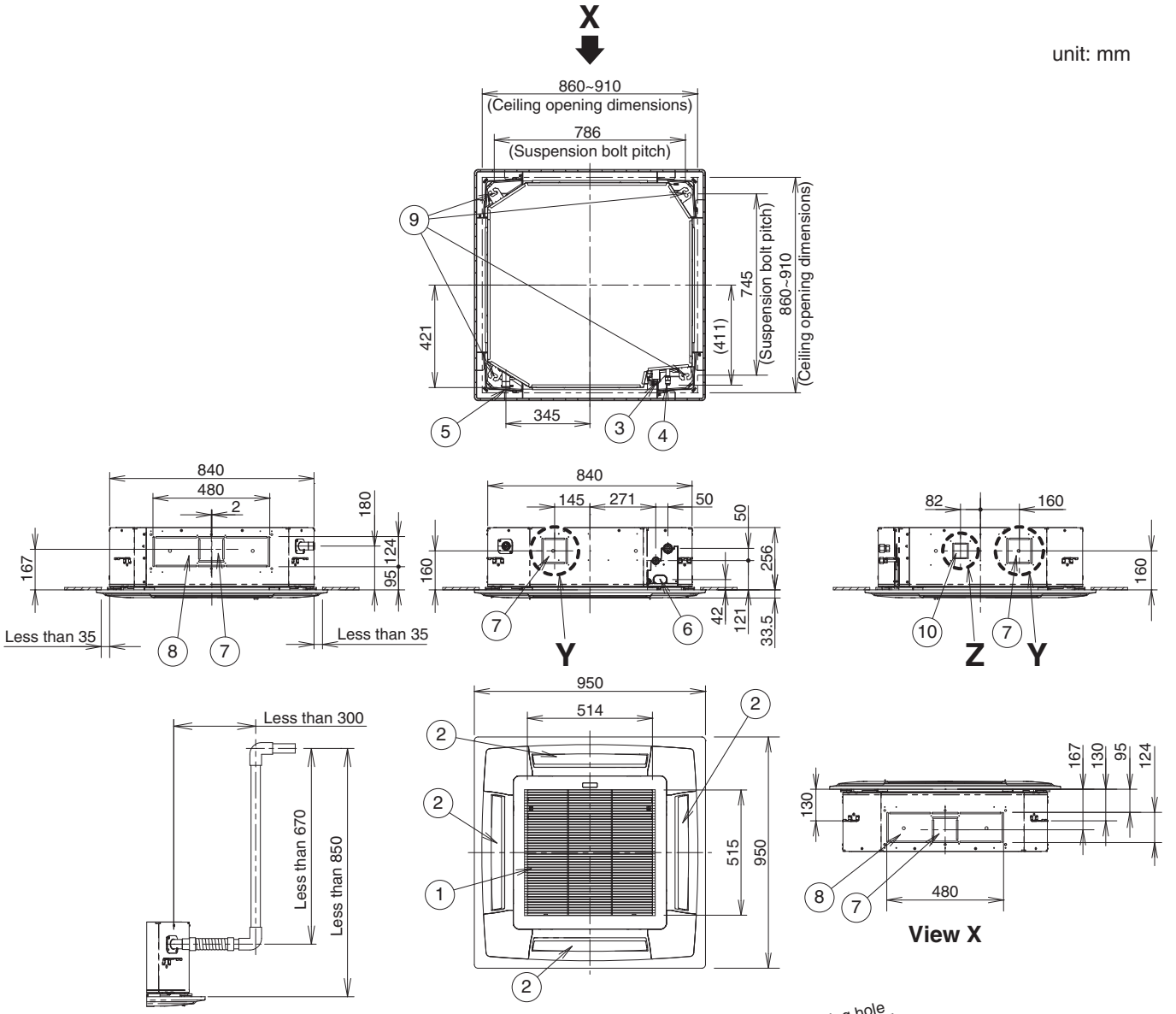

Raise dimension of drain tube

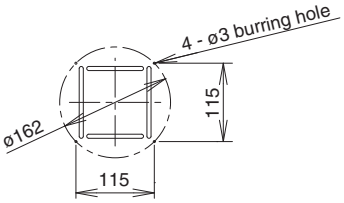

Detailed view Y

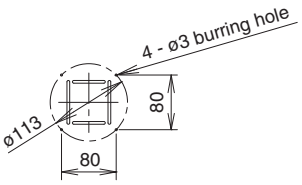

Detailed view Z

①	Air intake
②	Discharge outlet
③	Refrigerant tubing (liquid tube) ø9.52 (flared)
④	Refrigerant tubing (gas tube) ø15.88 (flared)
⑤	Drain tube connection port VP25 (outer dia.ø32)
⑥	Power supply port
⑦	Discharge duct connection port (ø150)
⑧	Vaporizing-type humidifier (optional) installation area
⑨	Suspension bolt hole (4-12 × 30 elongated hole)
⑩	Fresh air intake duct connection port (ø100) *

* Necessary to provide optional air intake kit.

* The length of the suspension bolts should be selected so that there is a gap of 30 mm or more below the lower surface of the ceiling (18 mm or more below the lower surface of the main unit), as shown in the figure at right. If the suspension bolt is too long, it will contact the ceiling panel and the unit cannot be installed.

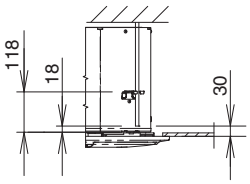

<Filter dimension>

520 x 520 x 16

2. 4-Way Cassette Type (U1 Type)

Indoor unit : S-106MU1E51/140MU1E51/160MU1E51

unit: mm

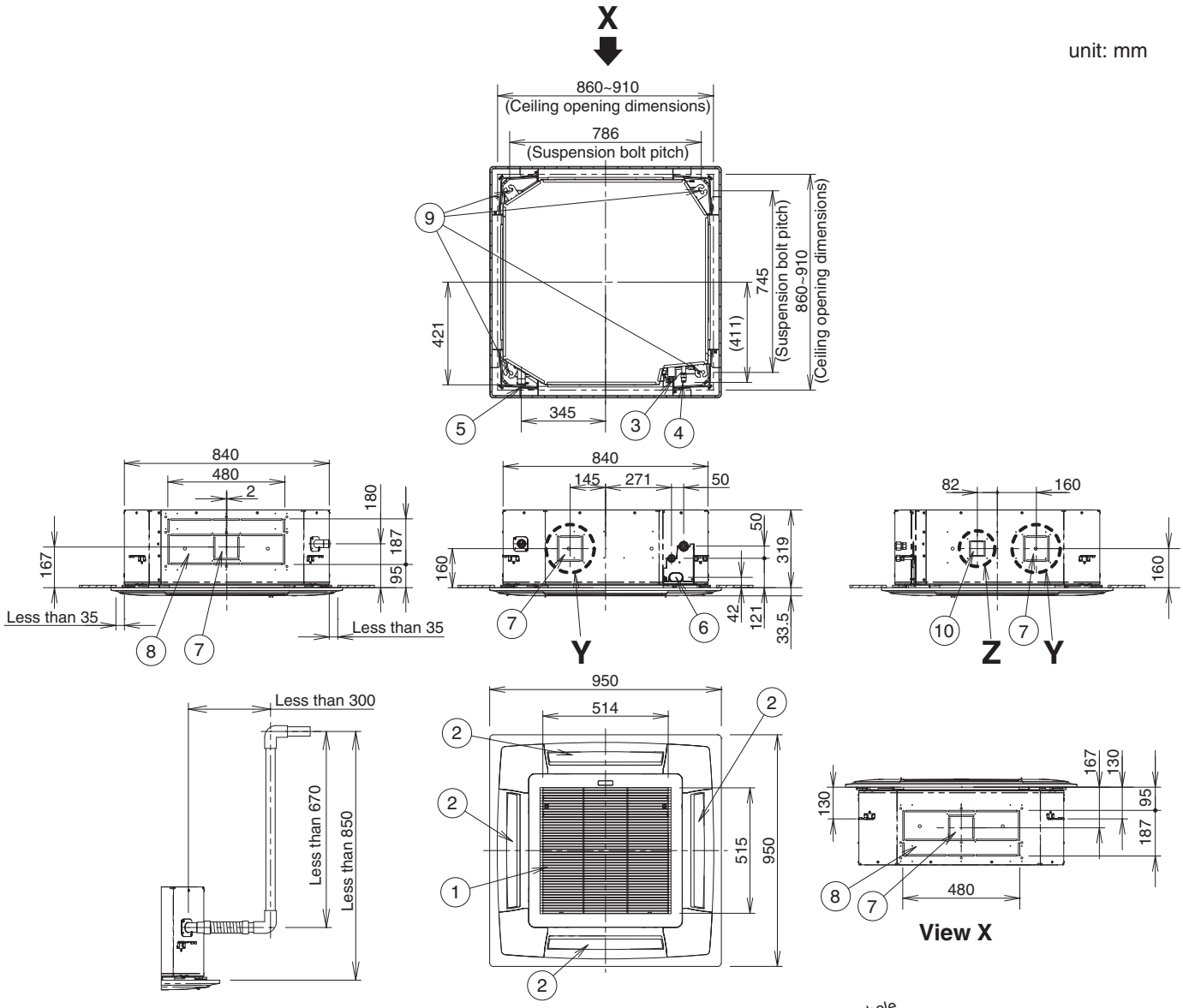

Raise dimension of drain tube

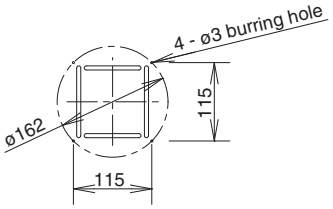

Detailed view Y

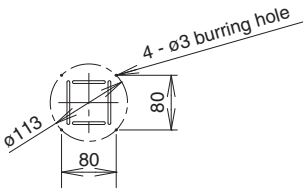

Detailed view Z

①	Air intake
②	Discharge outlet
③	Refrigerant tubing (liquid tube) ø9.52 (flared)
④	Refrigerant tubing (gas tube) ø15.88 (flared)
⑤	Drain tube connection port VP25 (outer dia. ø32)
⑥	Power supply port
⑦	Discharge duct connection port (ø150)
⑧	Vaporizing-type humidifier (optional) installation area
⑨	Suspension bolt hole (4-12 × 30 elongated hole)
⑩	Fresh air intake duct connection port (ø100) *

* Necessary to provide optional air intake kit.

* The length of the suspension bolts should be selected so that there is a gap of 30 mm or more below the lower surface of the ceiling (18 mm or more below the lower surface of the main unit), as shown in the figure at right. If the suspension bolt is too long, it will contact the ceiling panel and the unit cannot be installed.

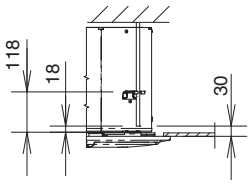

<Filter dimension>

520 x 520 x 16

2. 4-Way Cassette Type (U1 Type)

2-4. Noise Criterion Curves

Only 50Hz
High
Low

MODEL	: S-22MU1E51/28MU1E51/36MU1E51	
SOUND LEVEL	: HIGH	30 dB(A)
	LOW	28 dB(A)
CONDITION	: 1.5 m directly below unit	

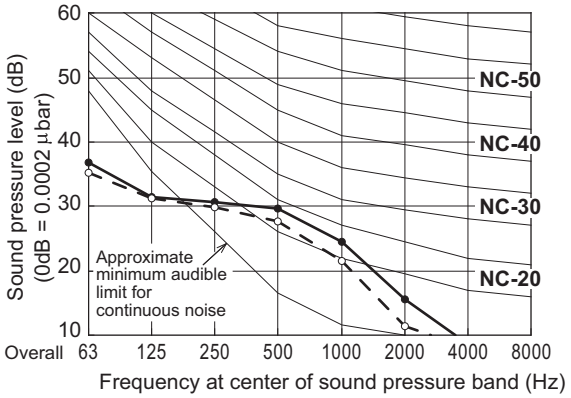

MODEL	: S-45MU1E51	
SOUND LEVEL	: HIGH	31 dB(A)
	LOW	28 dB(A)
CONDITION:	1.5 m directly below unit	

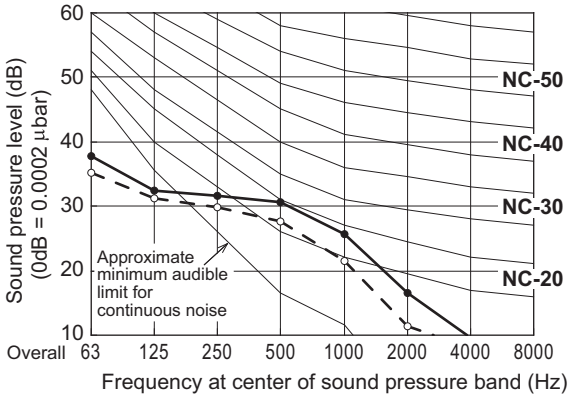

MODEL	: S-56MU1E51	
SOUND LEVEL	: HIGH	33 dB(A)
	LOW	28 dB(A)
CONDITION	: 1.5 m directly below unit	

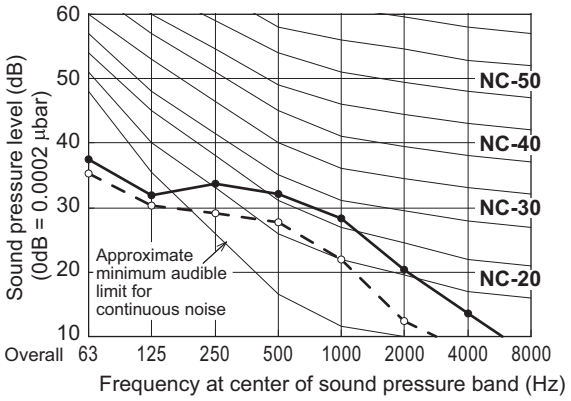

MODEL:	S-60MU1E51	
SOUND LEVEL:	HIGH	36 dB(A)
	LOW	29 dB(A)
CONDITION:	1.5 m directly below unit	

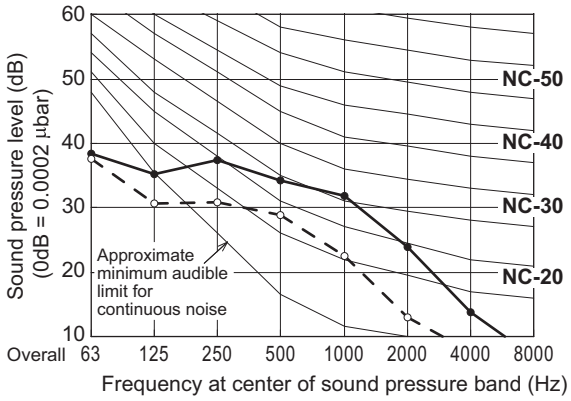

MODEL	: S-73MU1E51	
SOUND LEVEL	: HIGH	37 dB(A)
	LOW	29 dB(A)
CONDITION	: 1.5 m directly below unit	

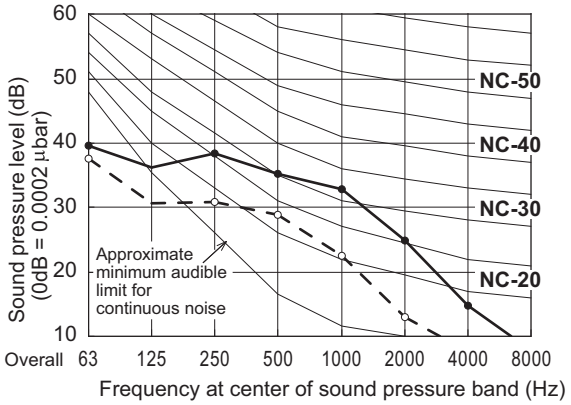

MODEL:	S-90MU1E51	
SOUND LEVEL:	HIGH	38 dB(A)
	LOW	32 dB(A)
CONDITION:	1.5 m directly below unit	

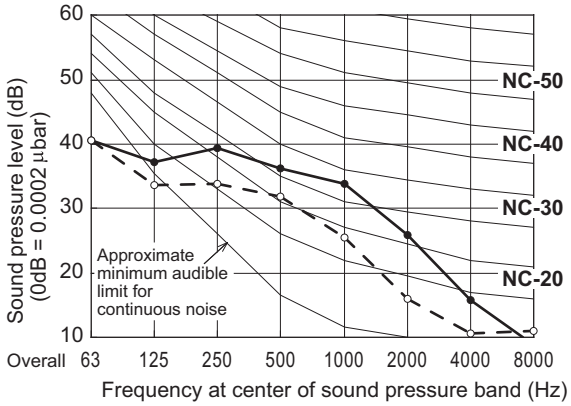

4

2. 4-Way Cassette Type (U1 Type)

Only 50Hz
High
Low

MODEL	: S-106MU1E51		
SOUND LEVEL	: HIGH	44 dB(A)	
	LOW	34 dB(A)	
CONDITION	: 1.5 m directly below unit		

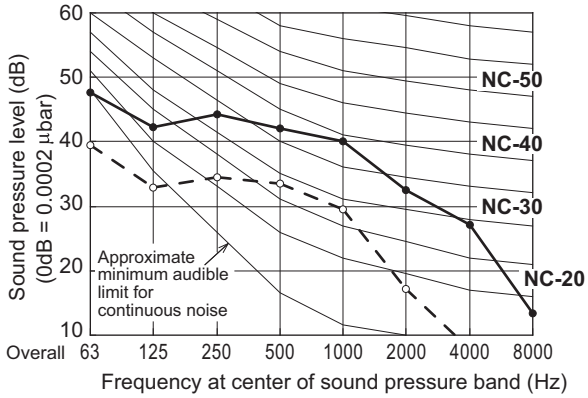

MODEL	: S-140MU1E51		
SOUND LEVEL	: HIGH	45 dB(A)	
	LOW	35 dB(A)	
CONDITION:	1.5 m directly below unit		

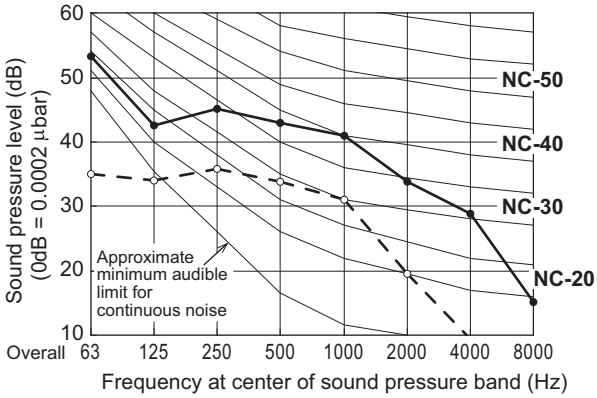

MODEL	: S-160MU1E51		
SOUND LEVEL	: HIGH	46 dB(A)	
	LOW	38 dB(A)	
CONDITION	: 1.5 m directly below unit		

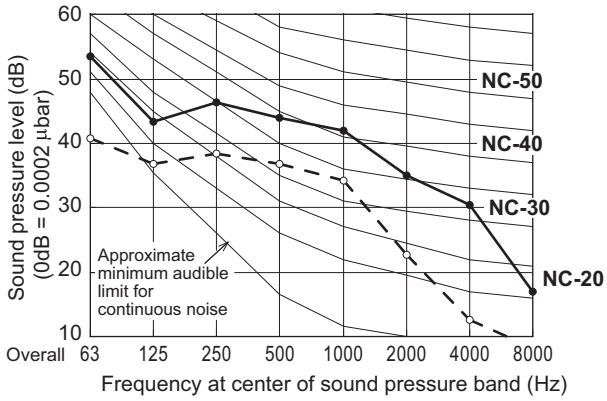

4

2. 4-Way Cassette Type (U1 Type)

2-5. Air Flow Distance / Temperature Chart

S-22MU1E51/28MU1E51/36MU1E51/45MU1E51/56MU1E51

Heating : Distribution of wind velocity

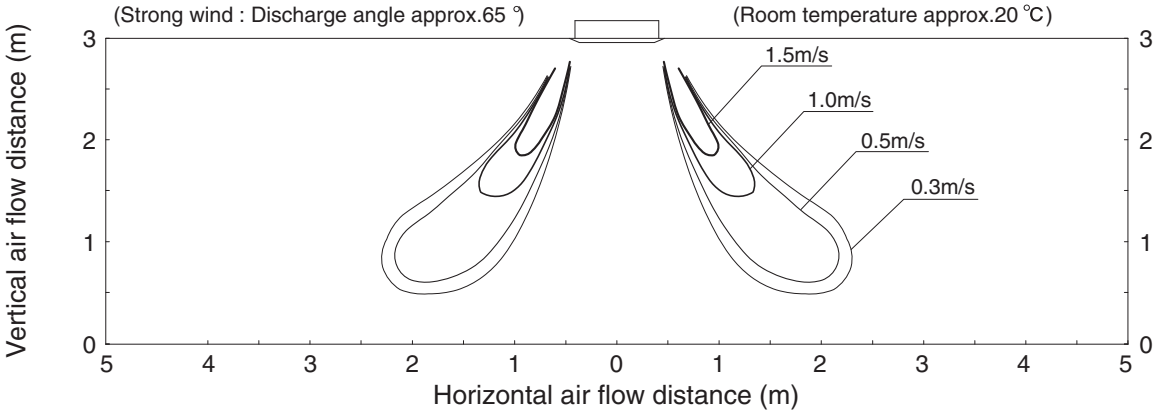

Heating : Distribution of temperature

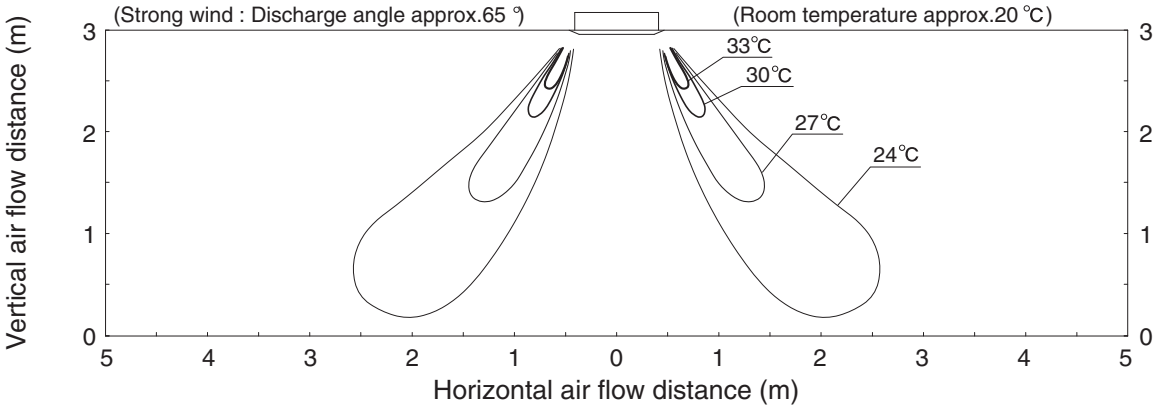

Cooling : Distribution of wind velocity

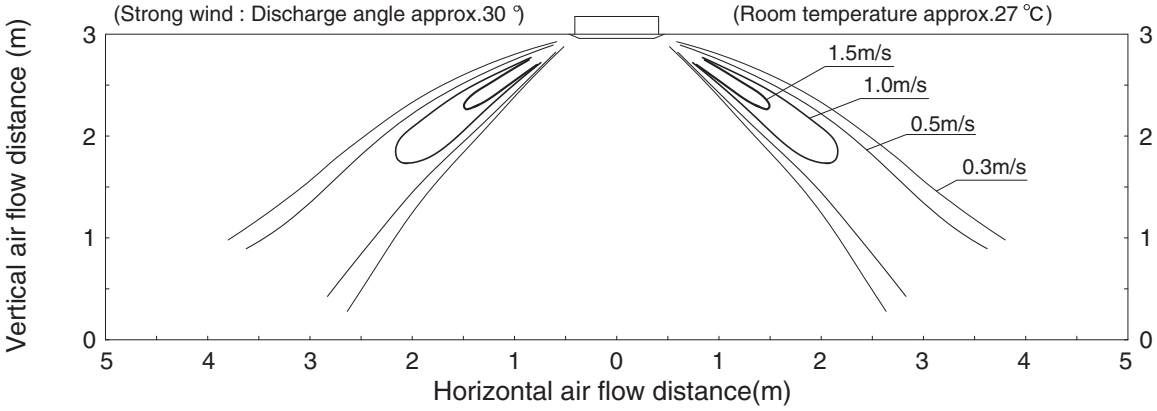

Cooling : Distribution of temperature

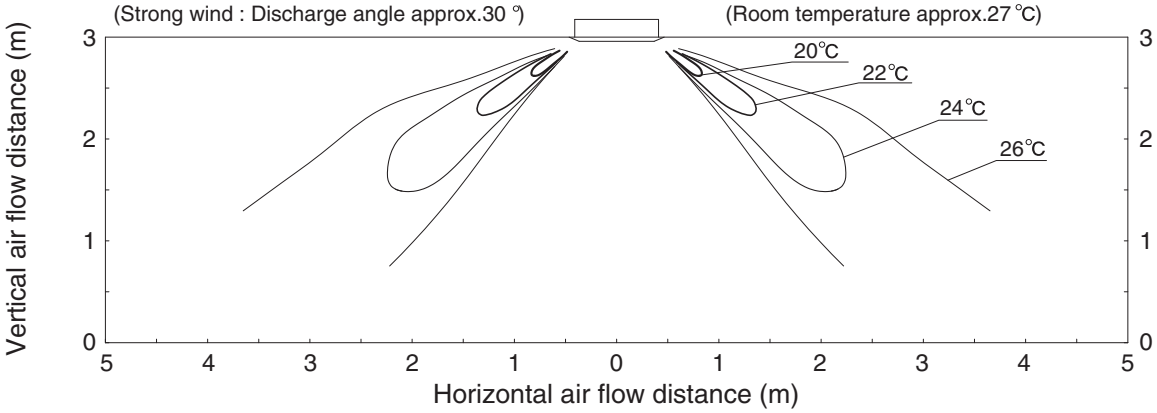

2. 4-Way Cassette Type (U1 Type)

S-60MU1E51, S-73MU1E51, S-90MU1E51

Heating : Distribution of wind velocity

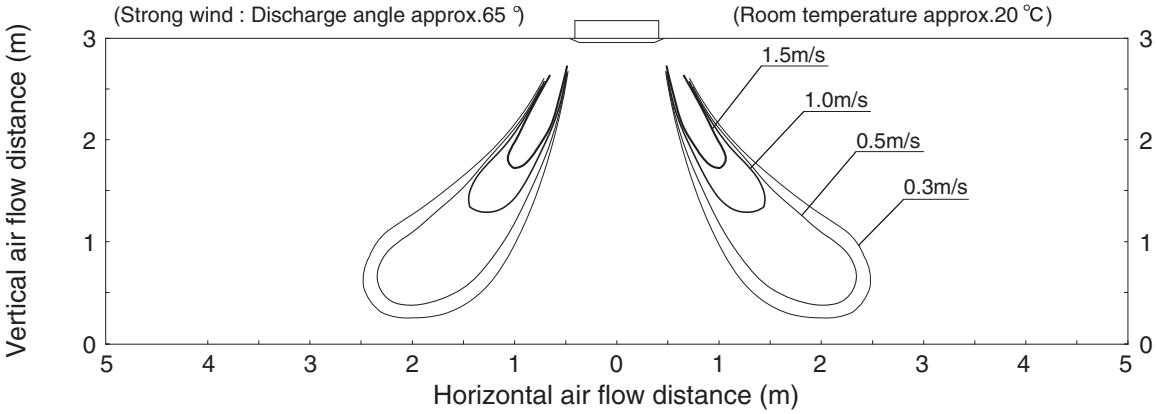

Heating : Distribution of temperature

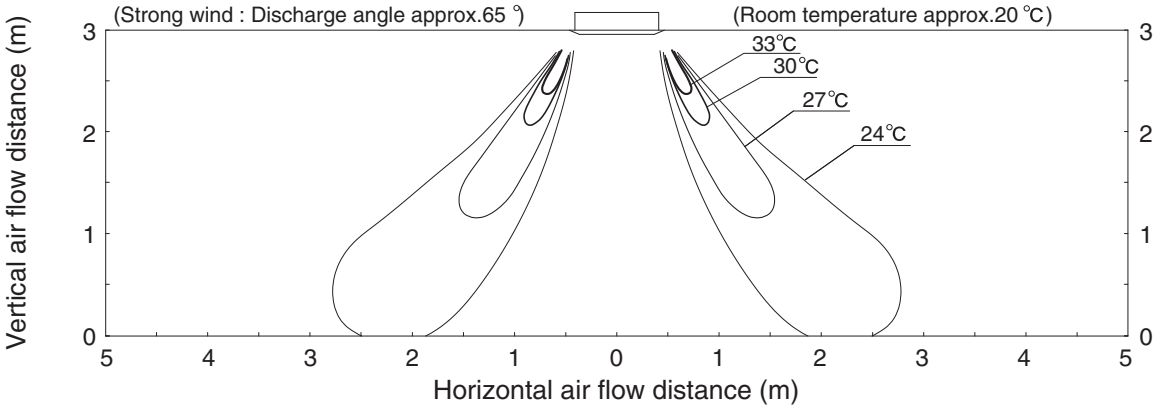

4

Cooling : Distribution of wind velocity

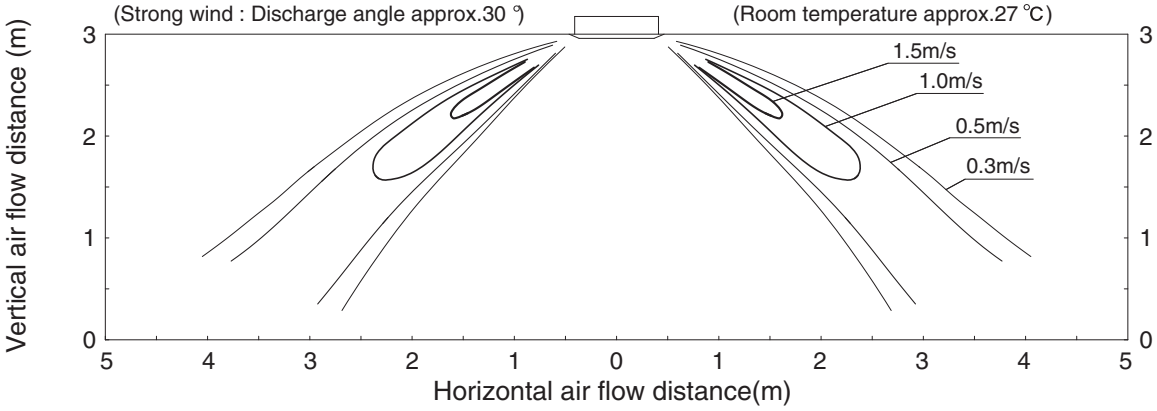

Cooling : Distribution of temperature

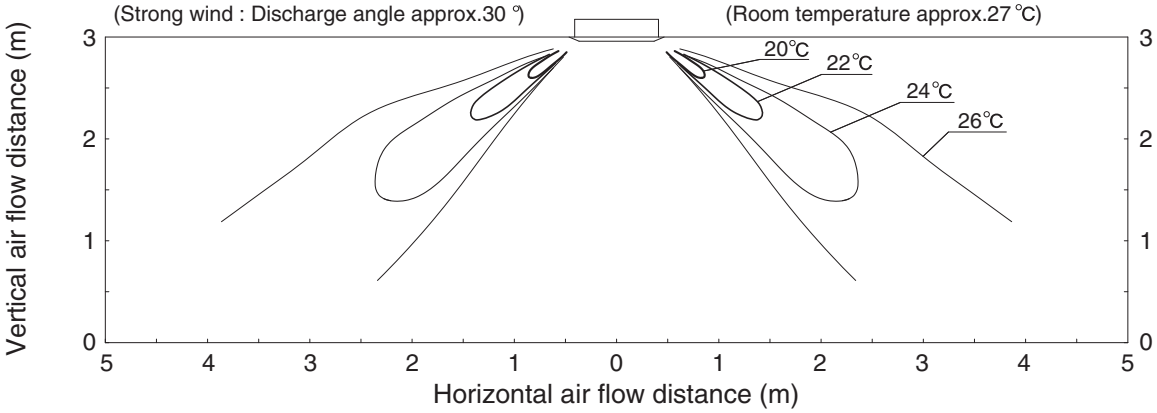

2. 4-Way Cassette Type (U1 Type)

S-106MU1E51/140MU1E51/160MU1E51

Heating : Distribution of wind velocity

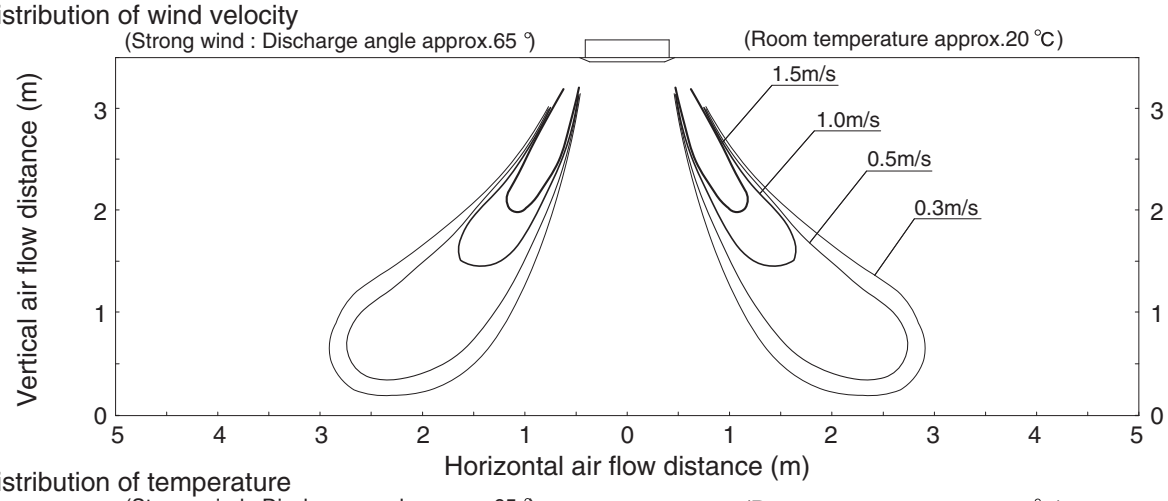

Heating : Distribution of temperature

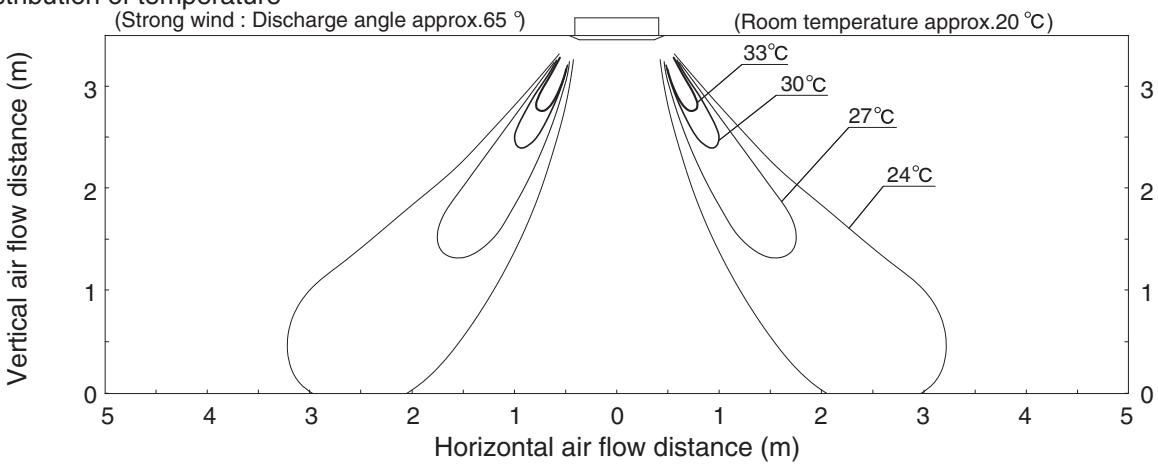

Cooling : Distribution of wind velocity

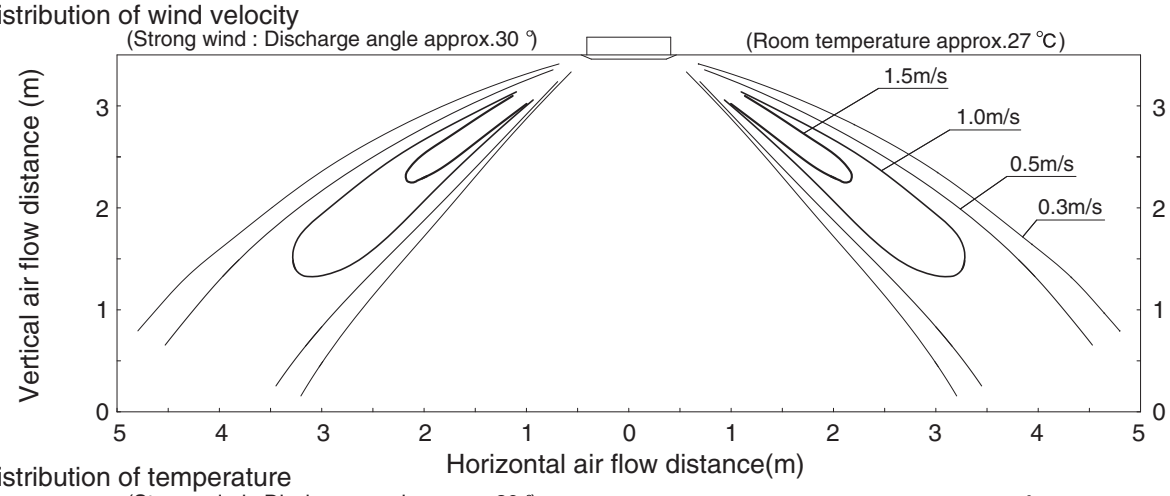

Cooling : Distribution of temperature

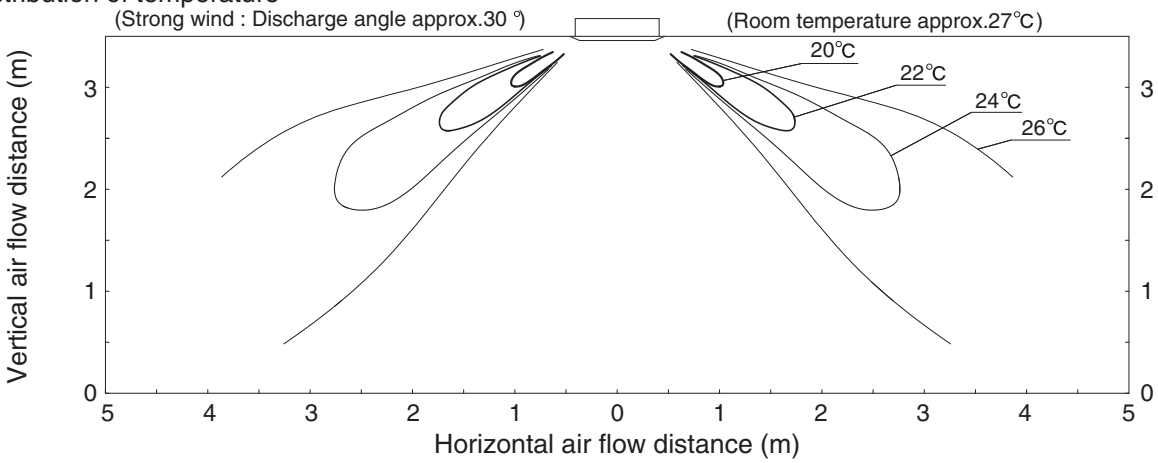

3. Low Silhouette Ducted Type (F2 Type)

3-1. Specifications

Unit specifications (A)

INDOOR		MODEL	S-22MF2E5			S-28MF2E5			S-36MF2E5		
PANEL		MODEL	-			-			-		
PERFORMANCE TEST CONDITION			ISO5151 / AS/NZS3823.1			ISO5151 / AS/NZS3823.1			ISO5151 / AS/NZS3823.1		
POWER SUPPLY		ø, Hz	1ø 50Hz			1ø 50Hz			1ø 50Hz		
		V	220	230	240	220	230	240	220	230	240
COOLING	CAPACITY	kW	2.2	2.2	2.2	2.8	2.8	2.8	3.6	3.6	3.6
		BTU/h	7500	7500	7500	9600	9600	9600	12300	12300	12300
		kcal/h(Fri./h)	-	-	-	-	-	-	-	-	-
	CURRENT	A	0.60	0.57	0.56	0.60	0.57	0.56	0.60	0.57	0.56
	INPUT POWER	W	70	70	70	70	70	70	70	70	70
	ANNUAL CONSUMPTION	W *4	-	-	-	-	-	-	-	-	-
	EER/EER CLASS	(W/W)*5/("A"~"G")	-	-	-	-	-	-	-	-	-
	EER	BTU/hW	-	-	-	-	-	-	-	-	-
	POWER FACTOR	%	-	-	-	-	-	-	-	-	-
	NOISE INDOOR (H/M/L)	dB-A	33/29/25			33/29/25			33/29/25		
		Power Level dB	55/51/47			55/51/47			55/51/47		
	NOISE OUTDOOR (H/L)	dB-A	-			-			-		
		Power Level dB	-			-			-		
HEATING	CAPACITY	kW	2.5	2.5	2.5	3.2	3.2	3.2	4.2	4.2	4.2
		BTU/h	8500	8500	8500	10900	10900	10900	14300	14300	14300
		kcal/h(Fri./h)	-	-	-	-	-	-	-	-	-
	CURRENT	A	0.60	0.57	0.56	0.60	0.57	0.56	0.60	0.57	0.56
	INPUT POWER	W	70	70	70	70	70	70	70	70	70
	COP/COP CLASS	(W/W)*5/("A"~"G")	-	-	-	-	-	-	-	-	-
	COP	BTU/hW	-	-	-	-	-	-	-	-	-
	POWER FACTOR	%	-	-	-	-	-	-	-	-	-
	NOISE INDOOR (H/M/L)	dB-A	33/29/25			33/29/25			33/29/25		
		Power Level dB	55/51/47			55/51/47			55/51/47		
	NOISE OUTDOOR (H/L)	dB-A	-			-			-		
		Power Level dB	-			-			-		
EXTRA LOW TEMP	CAPACITY(kW)/INPUT POWER(W)/COP		-			-			-		
Cooling	MAX CURRENT(A)/MAX INPUT POWER(W)		0.86 / 105	0.82 / 105	0.79 / 105	0.86 / 105	0.82 / 105	0.79 / 105	0.86 / 105	0.82 / 105	0.79 / 105
Heating	MAX CURRENT(A)/MAX INPUT POWER(W)		0.86 / 105	0.82 / 105	0.79 / 105	0.86 / 105	0.82 / 105	0.79 / 105	0.86 / 105	0.82 / 105	0.79 / 105
STARTING CURRENT(A)/COMP OUTPUT(W)			-	-	-	-	-	-	-	-	-
NETWORK IMPEDANCE (ΩMAX.) *3			-			-			-		
FM OUTPUT (ID/OD) W			119			119			119		
MOISTURE REMOVAL VOLUME		L/h(Pt/h)	1.3		(2.7)	1.6		(3.4)	2.1		(4.4)
External static pressure		Pa	70 (MIN10 - MAX150)			70 (MIN10 - MAX150)			70 (MIN10 - MAX150)		
I/D AIR FLOW	COOL	m^3/min (ft^3/min)	14 (494)			14 (494)			14 (494)		
	HEAT	m^3/min (ft^3/min)	14 (494)			14 (494)			14 (494)		
O/D AIR FLOW	COOL	m^3/min (ft^3/min)	-			-			-		
	HEAT	m^3/min (ft^3/min)	-			-			-		
REFRIGERANT TYPE, AMOUNT g(oz)			-			-			-		
PROD DIM	HEIGHT : H mm(inch)		290		(11-13/32)	290		(11-13/32)	290		(11-13/32)
	WIDTH : W mm(inch)		800		(31-1/2)	800		(31-1/2)	800		(31-1/2)
	DEPTH : D mm(inch)		700		(27-9/16)	700		(27-9/16)	700		(27-9/16)
PAC DIM	HEIGHT : H mm		355			355			355		
	WIDTH : W mm		1014			1014			1014		
	DEPTH : D mm		850			850			850		
MASS	(NET) kg(lb)		29		(64)	29		(64)	29		(64)
	(GROSS) kg(lb)		36		(80)	36		(80)	36		(80)
LAYERS LIMIT (actually)			9 (10)			9 (10)			9 (10)		
Operation Condition		Cool (DBT)	-			-			-		
		Heat (DBT)	-			-			-		
PIPING	PIPE DIAMETER mm (inch)		(Liquid) ø6.35 (1/4) (Gas) ø12.7 (1/2)			(Liquid) ø6.35 (1/4) (Gas) ø12.7 (1/2)			(Liquid) ø6.35 (1/4) (Gas) ø12.7 (1/2)		
	CONNECT METHOD, STD LENGTH m (ft)		flared type			flared type			flared type		
	PIPE LENGTH RANGE m (ft)		5 ~ 75 (16.4 ~ 246.1)			5 ~ 75 (16.4 ~ 246.1)			5 ~ 75 (16.4 ~ 246.1)		
	I/D & O/D HEIGHT DIFFERENCE m (ft)		-		-	-		-	-		-
	ADD GAS AMOUNT g/m (oz/ft)		-		-	-		-	-		-
	PIPE LENGTH FOR ADDITIONAL GAS m (ft)		-		-	-		-	-		-

*3: Network Impedance shall be applicable for EUROPE and CHINA models.
*4: The annual consumption is calculated by multiplying the input power at 230V(400V) by an average of 500 hours per year in cooling mode.
*5: EER and COP classification is at 230V(400V) only in accordance with EU directive 2002/31/EC.
* : In case it is necessary to indicate the air flow volume in (l/s), the value in (m^3/min.) shall be multiplied by 16.7 and rounded down the decimal point.
* : If the EUROVENT Certified models can be operated under the "extra-low" temperature condition, -7°C dry bulb and -8°C wet-bulb temperatures with rated voltage 230V shall be used.

3. Low Silhouette Ducted Type (F2 Type)

3-1. Specifications

Unit specifications (B)

INDOOR		MODEL	S-45MF2E5			S-56MF2E5					
PANEL		MODEL	-			-					
PERFORMANCE TEST CONDITION			ISO5151 / AS/NZS3823.1			ISO5151 / AS/NZS3823.1					
POWER SUPPLY		ø, Hz	1ø 50Hz			1ø 50Hz					
		V	220	230	240	220	230	240			
COOLING	CAPACITY	kW	4.5	4.5	4.5	5.6	5.6	5.6			
		BTU/h	15400	15400	15400	19100	19100	19100			
		kcal/h(Fri./h)	-	-	-	-	-	-			
	CURRENT	A	0.60	0.57	0.56	0.77	0.74	0.71			
	INPUT POWER	W	70	70	70	100	100	100			
	ANNUAL CONSUMPTION	W *4	-	-	-	-	-	-			
	EER/EER CLASS	(W/W)*5/("A"~"G")	-	-	-	-	-	-			
	EER	BTU/hW	-	-	-	-	-	-			
	POWER FACTOR	%	-	-	-	-	-	-			
	NOISE INDOOR (H/M/L)	dB-A	34/32/28			34/32/28					
		Power Level dB	56/54/50			56/54/50					
	NOISE OUTDOOR (H/L)	dB-A	-			-					
		Power Level dB	-			-					
HEATING	CAPACITY	kW	5.0	5.0	5.0	6.3	6.3	6.3			
		BTU/h	17100	17100	17100	21500	21500	21500			
		kcal/h(Fri./h)	-	-	-	-	-	-			
	CURRENT	A	0.60	0.57	0.56	0.77	0.74	0.71			
	INPUT POWER	W	70	70	70	100	100	100			
	COP/COP CLASS	(W/W)*5/("A"~"G")	-	-	-	-	-	-			
	COP	BTU/hW	-	-	-	-	-	-			
	POWER FACTOR	%	-	-	-	-	-	-			
	NOISE INDOOR (H/M/L)	dB-A	34/32/28			34/32/28					
		Power Level dB	56/54/50			56/54/50					
	NOISE OUTDOOR (H/L)	dB-A	-			-					
		Power Level dB	-			-					
EXTRA LOW TEMP	CAPACITY(kW)/INPUT POWER(W)/COP		-			-					
Cooling	MAX CURRENT(A)/MAX INPUT POWER(W)		0.86 / 105	0.82 / 105	0.79 / 105	1.00 / 125	0.96 / 125	0.92 / 125			
Heating	MAX CURRENT(A)/MAX INPUT POWER(W)		0.86 / 105	0.82 / 105	0.79 / 105	1.00 / 125	0.96 / 125	0.92 / 125			
STARTING CURRENT(A)/COMP OUTPUT(W)			-	-	-	-	-	-			
NETWORK IMPEDANCE (ΩMAX.) *3			-			-					
FM OUTPUT (ID/OD) W			119			119					
MOISTURE REMOVAL VOLUME		L/h(Pt/h)	2.5		(5.3)	3.2		(6.7)			
External static pressure		Pa	70 (MIN10 - MAX150)			70 (MIN10 - MAX150)					
I/D AIR FLOW	COOL	m^3/min (ft^3/min)	14 (494)			16 (565)					
	HEAT	m^3/min (ft^3/min)	14 (494)			16 (565)					
O/D AIR FLOW	COOL	m^3/min (ft^3/min)	-			-					
	HEAT	m^3/min (ft^3/min)	-			-					
REFRIGERANT TYPE, AMOUNT g(oz)			-			-					
PROD DIM	HEIGHT : H mm(inch)		290		(11-13/32)	290		(11-13/32)			
	WIDTH : W mm(inch)		800		(31-1/2)	800		(31-1/2)			
	DEPTH : D mm(inch)		700		(27-9/16)	700		(27-9/16)			
PAC DIM	HEIGHT : H mm		355			355					
	WIDTH : W mm		1014			1014					
	DEPTH : D mm		850			850					
MASS	(NET) kg(lb)		29		(64)	29		(64)			
	(GROSS) kg(lb)		36		(80)	36		(80)			
LAYERS LIMIT (actually)			9 (10)			9 (10)					
Operation Condition		Cool (DBT)	-			-					
		Heat (DBT)	-			-					
PIPING	PIPE DIAMETER mm (inch)		(Liquid) ø6.35 (1/4) (Gas) ø12.7 (1/2)			(Liquid) ø6.35 (1/4) (Gas) ø12.7 (1/2)					
	CONNECT METHOD, STD LENGTH m (ft)		flared type			flared type					
	PIPE LENGTH RANGE m (ft)		5 ~ 75 (16.4 ~ 246.1)			5 ~ 75 (16.4 ~ 246.1)					
	I/D & O/D HEIGHT DIFFERENCE m (ft)		-		-	-		-			
	ADD GAS AMOUNT g/m (oz/ft)		-		-	-		-			
	PIPE LENGTH FOR ADDITIONAL GAS m (ft)		-		-	-		-			

*3: Network Impedance shall be applicable for EUROPE and CHINA models.
*4: The annual consumption is calculated by multiplying the input power at 230V(400V) by an average of 500 hours per year in cooling mode.
*5: EER and COP classification is at 230V(400V) only in accordance with EU directive 2002/31/EC.
* : In case it is necessary to indicate the air flow volume in (l/s), the value in (m^3/min.) shall be multiplied by 16.7 and rounded down the decimal point.
* : If the EUROVENT Certified models can be operated under the "extra-low" temperature condition, -7°C dry bulb and -8°C wet-bulb temperatures with rated voltage 230V shall be used.

4

3. Low Silhouette Ducted Type (F2 Type)

3-1. Specifications

Unit specifications (C)

INDOOR		MODEL	S-60MF2E5			S-73MF2E5			S-90MF2E5		
PANEL		MODEL	-			-			-		
PERFORMANCE TEST CONDITION			ISO5151 / AS/NZS3823.1			ISO5151 / AS/NZS3823.1			ISO5151 / AS/NZS3823.1		
POWER SUPPLY		ø, Hz	1ø 50Hz			1ø 50Hz			1ø 50Hz		
		V	220	230	240	220	230	240	220	230	240
COOLING	CAPACITY	kW	6.0	6.0	6.0	7.3	7.3	7.3	9.0	9.0	9.0
		BTU/h	20500	20500	20500	24900	24900	24900	30700	30700	30700
		kcal/h(Fri./h)	-	-	-	-	-	-	-	-	-
	CURRENT	A	0.91	0.89	0.87	0.91	0.89	0.87	0.99	0.97	0.95
	INPUT POWER	W	120	120	120	120	120	120	135	135	135
	ANNUAL CONSUMPTION	W *4	-	-	-	-	-	-	-	-	-
	EER/EER CLASS	(W/W)*5/("A"~"G")	-	-	-	-	-	-	-	-	-
	EER	BTU/hW	-	-	-	-	-	-	-	-	-
	POWER FACTOR	%	-	-	-	-	-	-	-	-	-
	NOISE INDOOR (H/M/L)	dB-A	35/32/26			35/32/26			37/34/28		
		Power Level dB	57/54/48			57/54/48			59/56/50		
	NOISE OUTDOOR (H/L)	dB-A	-			-			-		
		Power Level dB	-			-			-		
HEATING	CAPACITY	kW	7.1	7.1	7.1	8.0	8.0	8.0	10.0	10.0	10.0
		BTU/h	24200	24200	24200	27300	27300	27300	34100	34100	34100
		kcal/h(Fri./h)	-	-	-	-	-	-	-	-	-
	CURRENT	A	0.91	0.89	0.87	0.91	0.89	0.87	0.99	0.97	0.95
	INPUT POWER	W	120	120	120	120	120	120	135	135	135
	COP/COP CLASS	(W/W)*5/("A"~"G")	-	-	-	-	-	-	-	-	-
	COP	BTU/hW	-	-	-	-	-	-	-	-	-
	POWER FACTOR	%	-	-	-	-	-	-	-	-	-
	NOISE INDOOR (H/M/L)	dB-A	35/32/26			35/32/26			37/34/28		
		Power Level dB	57/54/48			57/54/48			59/56/50		
	NOISE OUTDOOR (H/L)	dB-A	-			-			-		
		Power Level dB	-			-			-		
EXTRA LOW TEMP	CAPACITY(kW)/INPUT POWER(W)/COP		-			-			-		
Cooling	MAX CURRENT(A)/MAX INPUT POWER(W)		1.26 / 160	1.20 / 160	1.15 / 160	1.26 / 160	1.20 / 160	1.15 / 160	1.42 / 200	1.36 / 200	1.30 / 200
Heating	MAX CURRENT(A)/MAX INPUT POWER(W)		1.26 / 160	1.20 / 160	1.15 / 160	1.26 / 160	1.20 / 160	1.15 / 160	1.42 / 200	1.36 / 200	1.30 / 200
STARTING CURRENT(A)/COMP OUTPUT(W)			-	-	-	-	-	-	-	-	-
NETWORK IMPEDANCE (ΩMAX.) *3			-			-			-		
FM OUTPUT (ID/OD) W			124			124			124		
MOISTURE REMOVAL VOLUME		L/h(Pt/h)	3.4	(7.1)		4.4	(9.2)		5.4	(11.3)	
External static pressure		Pa	70 (MIN10 - MAX150)			70 (MIN10 - MAX150)			70 (MIN10 - MAX150)		
I/D AIR FLOW	COOL	m^3/min (ft^3/min)	21 (741)			21 (741)			25 (883)		
	HEAT	m^3/min (ft^3/min)	21 (741)			21 (741)			25 (883)		
O/D AIR FLOW	COOL	m^3/min (ft^3/min)	-			-			-		
	HEAT	m^3/min (ft^3/min)	-			-			-		
REFRIGERANT TYPE, AMOUNT g(oz)			-			-			-		
PROD DIM	HEIGHT : H mm(inch)		290	(11-13/32)		290	(11-13/32)		290	(11-13/32)	
	WIDTH : W mm(inch)		1000	(39-3/8)		1000	(39-3/8)		1000	(39-3/8)	
	DEPTH : D mm(inch)		700	(27-9/16)		700	(27-9/16)		700	(27-9/16)	
PAC DIM	HEIGHT : H mm		355			355			355		
	WIDTH : W mm		1214			1214			1214		
	DEPTH : D mm		850			850			850		
MASS	(NET) kg(lb)		34	(75)		34	(75)		34	(75)	
	(GROSS) kg(lb)		42	(93)		42	(93)		42	(93)	
LAYERS LIMIT (actually)			9 (10)			9 (10)			9 (10)		
Operation Condition		Cool (DBT)	-			-			-		
		Heat (DBT)	-			-			-		
PIPING	PIPE DIAMETER mm (inch)		(Liquid) ø9.52 (3/8) (Gas) ø15.88 (5/8)			(Liquid) ø9.52 (3/8) (Gas) ø15.88 (5/8)			(Liquid) ø9.52 (3/8) (Gas) ø15.88 (5/8)		
	CONNECT METHOD, STD LENGTH m (ft)		flared type			flared type			flared type		
	PIPE LENGTH RANGE m (ft)		5 ~ 75 (16.4 ~ 246.1)			5 ~ 75 (16.4 ~ 246.1)			5 ~ 75 (16.4 ~ 246.1)		
	I/D & O/D HEIGHT DIFFERENCE m (ft)		-	-		-	-		-	-	
	ADD GAS AMOUNT g/m (oz/ft)		-	-		-	-		-	-	
	PIPE LENGTH FOR ADDITIONAL GAS m (ft)		-	-		-	-		-	-	

*3: Network Impedance shall be applicable for EUROPE and CHINA models.
*4: The annual consumption is calculated by multiplying the input power at 230V(400V) by an average of 500 hours per year in cooling mode.
*5: EER and COP classification is at 230V(400V) only in accordance with EU directive 2002/31/EC.
* : In case it is necessary to indicate the air flow volume in (l/s), the value in (m^3/min.) shall be multiplied by 16.7 and rounded down the decimal point.
* : If the EUROVENT Certified models can be operated under the "extra-low" temperature condition, -7°C dry bulb and -8°C wet-bulb temperatures with rated voltage 230V shall be used.

3. Low Silhouette Ducted Type (F2 Type)

3-1. Specifications

Unit specifications (D)

INDOOR		MODEL	S-106MF2E5			S-140MF2E5			S-160MF2E5		
PANEL		MODEL	-			-			-		
PERFORMANCE TEST CONDITION			ISO5151 / AS/NZS3823.1			ISO5151 / AS/NZS3823.1			ISO5151 / AS/NZS3823.1		
POWER SUPPLY		ø, Hz	1ø 50Hz			1ø 50Hz			1ø 50Hz		
		V	220	230	240	220	230	240	220	230	240
COOLING	CAPACITY	kW	10.6	10.6	10.6	14.0	14.0	14.0	16.0	16.0	16.0
		BTU/h	36200	36200	36200	47800	47800	47800	54600	54600	54600
		kcal/h(Fri./h)	-	-	-	-	-	-	-	-	-
	CURRENT	A	1.35	1.30	1.27	1.48	1.44	1.39	1.55	1.50	1.47
	INPUT POWER	W	195	195	195	215	215	215	225	225	225
	ANNUAL CONSUMPTION	W *4	-	-	-	-	-	-	-	-	-
	EER/EER CLASS	(W/W)*5/("A"~"G")	-	-	-	-	-	-	-	-	-
	EER	BTU/hW	-	-	-	-	-	-	-	-	-
	POWER FACTOR	%	-	-	-	-	-	-	-	-	-
	NOISE INDOOR (H/M/L)	dB-A	38/34/31			39/35/32			40/36/33		
		Power Level dB	60/56/53			61/57/54			62/58/55		
	NOISE OUTDOOR (H/L)	dB-A	-			-			-		
		Power Level dB	-			-			-		
HEATING	CAPACITY	kW	11.4	11.4	11.4	16.0	16.0	16.0	18.0	18.0	18.00
		BTU/h	38900	38900	38900	54600	54600	54600	61400	61400	61400
		kcal/h(Fri./h)	-	-	-	-	-	-	-	-	-
	CURRENT	A	1.37	1.34	1.29	1.46	1.42	1.38	1.55	1.50	1.46
	INPUT POWER	W	200	200	200	210	210	210	225	225	225
	COP/COP CLASS	(W/W)*5/("A"~"G")	-	-	-	-	-	-	-	-	-
	COP	BTU/hW	-	-	-	-	-	-	-	-	-
	POWER FACTOR	%	-	-	-	-	-	-	-	-	-
	NOISE INDOOR (H/M/L)	dB-A	38/34/31			39/35/32			40/36/33		
		Power Level dB	60/56/53			61/57/54			62/58/55		
	NOISE OUTDOOR (H/L)	dB-A	-			-			-		
		Power Level dB	-			-			-		
EXTRA LOW TEMP	CAPACITY(kW)/INPUT POWER(W)/COP		-			-			-		
Cooling	MAX CURRENT(A)/MAX INPUT POWER(W)		1.80 / 265	1.75 / 265	1.70 / 265	1.80 / 265	1.75 / 265	1.70 / 265	1.91 / 285	1.86 / 285	1.81 / 285
Heating	MAX CURRENT(A)/MAX INPUT POWER(W)		1.80 / 265	1.75 / 265	1.70 / 265	1.80 / 265	1.75 / 265	1.70 / 265	1.91 / 285	1.86 / 285	1.81 / 285
STARTING CURRENT(A)/COMP OUTPUT(W)			-	-	-	-	-	-	-	-	-
NETWORK IMPEDANCE (ΩMAX.) *3			-			-			-		
FM OUTPUT (ID/OD) W			235			235			235		
MOISTURE REMOVAL VOLUME		L/h(Pt/h)	6.4		(13.4)	9.0		(18.9)	10.7		(22.5)
External static pressure		Pa	100 (MIN10 - MAX150)			100 (MIN10 - MAX150)			100 (MIN10 - MAX150)		
I/D AIR FLOW	COOL	m^3/min (ft^3/min)	32 (1130)			34 (1201)			36 (1271)		
	HEAT	m^3/min (ft^3/min)	32 (1130)			34 (1201)			36 (1271)		
O/D AIR FLOW	COOL	m^3/min (ft^3/min)	-			-			-		
	HEAT	m^3/min (ft^3/min)	-			-			-		
REFRIGERANT TYPE, AMOUNT g(oz)			-			-			-		
PROD DIM	HEIGHT : H mm(inch)		290		(11-13/32)	290		(11-13/32)	290		(11-13/32)
	WIDTH : W mm(inch)		1400		(55-1/8)	1400		(55-1/8)	1400		(55-1/8)
	DEPTH : D mm(inch)		700		(27-9/16)	700		(27-9/16)	700		(27-9/16)
PAC DIM	HEIGHT : H mm		355			355			355		
	WIDTH : W mm		1614			1614			1614		
	DEPTH : D mm		850			850			850		
MASS	(NET) kg(lb)		46		(102)	46		(102)	46		(102)
	(GROSS) kg(lb)		55		(122)	55		(122)	55		(122)
LAYERS LIMIT (actually)			9 (10)			9 (10)			9 (10)		
Operation Condition		Cool (DBT)	-			-			-		
		Heat (DBT)	-			-			-		
PIPING	PIPE DIAMETER mm (inch)		(Liquid) ø9.52 (3/8) (Gas) ø15.88 (5/8)			(Liquid) ø9.52 (3/8) (Gas) ø15.88 (5/8)			(Liquid) ø9.52 (3/8) (Gas) ø15.88 (5/8)		
	CONNECT METHOD, STD LENGTH m (ft)		flared type			flared type			flared type		
	PIPE LENGTH RANGE m (ft)		5 ~ 75 (16.4 ~ 246.1)			5 ~ 75 (16.4 ~ 246.1)			5 ~ 75 (16.4 ~ 246.1)		
	I/D & O/D HEIGHT DIFFERENCE m (ft)		-		-	-		-	-		-
	ADD GAS AMOUNT g/m (oz/ft)		-		-	-		-	-		-
	PIPE LENGTH FOR ADDITIONAL GAS m (ft)		-		-	-		-	-		-

*3: Network Impedance shall be applicable for EUROPE and CHINA models.
*4: The annual consumption is calculated by multiplying the input power at 230V(400V) by an average of 500 hours per year in cooling mode.
*5: EER and COP classification is at 230V(400V) only in accordance with EU directive 2002/31/EC.
* : In case it is necessary to indicate the air flow volume in (l/s), the value in (m^3/min.) shall be multiplied by 16.7 and rounded down the decimal point.
* : If the EUROVENT Certified models can be operated under the "extra-low" temperature condition, -7°C dry bulb and -8°C wet-bulb temperatures with rated voltage 230V shall be used.

3. Low Silhouette Ducted Type (F2 Type)

3-2. Major Component Specifications

Indoor unit (A)

MODEL No.			S-22MF2E5
Power source			220 - 230 - 240 V, single-phase, 50 Hz
Controller P.C.B. Ass'y			A73C5910 (Microprocessor)
Fan (Number...diameter)		mm	Centrifugal (1...ø185)
Fan motor			
	Model...Nominal output	W	SIC-70CW-D8120-1...119 W
	Power source		280 VDC
	No. of pole...r.p.m. (230V)	rpm	8P... 1040
	Run capacitor	VAC, μF	–
Electronic expansion valve			
	Coil		UKV-A152
	Coil resistance (at 20°C)	Ω	ORG – GRY : 46 YEL – GRY : 46 RED – GRY : 46 BLK – GRY : 46
	Valve body		UKV-25D32
Heat exchanger			
	Coil		Aluminium plate fin / Copper tube
	Rows...fin pitch	mm	3...1.34
	Face area	m^2	0.202
Drain pump			PMD-12D13ST-1
	Rated	V, W	DC 13 V, 4.2 W
	Drain piping rise height from unit bottom, capacity		785 mm, 400 cc/min

4

3. Low Silhouette Ducted Type (F2 Type)

Indoor unit (B)

MODEL No.			**S-28MF2E5**
Power source			220 - 230 - 240 V, single-phase, 50 Hz
Controller P.C.B. Ass'y			A73C5911 (Microprocessor)
Fan (Number...diameter)		mm	Centrifugal (1...ø185)
Fan motor			
	Model...Nominal output	W	SIC-70CW-D8120-1...119 W
	Power source		280 VDC
	No. of pole...r.p.m. (230V)	rpm	8P... 1040
	Run capacitor	VAC, μF	–
Electronic expansion valve			
	Coil		UKV-A152
	Coil resistance (at 20°C)	Ω	ORG – GRY : 46 YEL – GRY : 46 RED – GRY : 46 BLK – GRY : 46
	Valve body		UKV-25D32
Heat exchanger			
	Coil		Aluminium plate fin / Copper tube
	Rows...fin pitch	mm	3...1.34
	Face area	m^2	0.202
Drain pump			PMD-12D13ST-1
	Rated	V, W	DC 13 V, 4.2 W
	Drain piping rise height from unit bottom, capacity		785 mm, 400 cc/min

3. Low Silhouette Ducted Type (F2 Type)

Indoor unit (C)

MODEL No.			S-36MF2E5
Power source			220 - 230 - 240 V, single-phase, 50 Hz
Controller P.C.B. Ass'y			A73C5912 (Microprocessor)
Fan (Number...diameter)		mm	Centrifugal (1...ø185)
Fan motor			
	Model...Nominal output	W	SIC-70CW-D8120-1...119 W
	Power source		280 VDC
	No. of pole...r.p.m. (230V)	rpm	8P... 1040
	Run capacitor	VAC, μF	–
Electronic expansion valve			
	Coil		UKV-A152
	Coil resistance (at 20°C)	Ω	ORG – GRY : 46 YEL – GRY : 46 RED – GRY : 46 BLK – GRY : 46
	Valve body		UKV-25D32
Heat exchanger			
	Coil		Aluminium plate fin / Copper tube
	Rows...fin pitch	mm	3...1.34
	Face area	m^2	0.202
Drain pump			PMD-12D13ST-1
	Rated	V, W	DC 13 V, 4.2 W
	Drain piping rise height from unit bottom, capacity		785 mm, 400 cc/min

3. Low Silhouette Ducted Type (F2 Type)

Indoor unit (D)

MODEL No.			**S-45MF2E5**
Power source			220 - 230 - 240 V, single-phase, 50 Hz
Controller P.C.B. Ass'y			A73C5913 (Microprocessor)
Fan (Number...diameter)		mm	Centrifugal (1...ø185)
Fan motor			
	Model...Nominal output	W	SIC-70CW-D8120-1...119 W
	Power source		280 VDC
	No. of pole...r.p.m. (230V)	rpm	8P... 1040
	Run capacitor	VAC, μF	–
Electronic expansion valve			
	Coil		UKV-A152
	Coil resistance (at 20°C)	Ω	ORG – GRY : 46 YEL – GRY : 46 RED – GRY : 46 BLK – GRY : 46
	Valve body		UKV-25D32
Heat exchanger			
	Coil		Aluminium plate fin / Copper tube
	Rows...fin pitch	mm	3...1.34
	Face area	m^2	0.202
Drain pump			PMD-12D13ST-1
	Rated	V, W	DC 13 V, 4.2 W
	Drain piping rise height from unit bottom, capacity		785 mm, 400 cc/min

3. Low Silhouette Ducted Type (F2 Type)

Indoor unit (E)

MODEL No.			**S-56MF2E5**
Power source			220 - 230 - 240 V, single-phase, 50 Hz
Controller P.C.B. Ass'y			A73C5914 (Microprocessor)
Fan (Number...diameter)		mm	Centrifugal (1...ø185)
Fan motor			
	Model...Nominal output	W	SIC-70CW-D8120-1...119 W
	Power source		280 VDC
	No. of pole...r.p.m. (230V)	rpm	8P... 1120
	Run capacitor	VAC, μF	–
Electronic expansion valve			
	Coil		UKV-A152
	Coil resistance (at 20°C)	Ω	ORG – GRY : 46 YEL – GRY : 46 RED – GRY : 46 BLK – GRY : 46
	Valve body		UKV-25D32
Heat exchanger			
	Coil		Aluminium plate fin / Copper tube
	Rows...fin pitch	mm	3...1.34
	Face area	m^2	0.202
Drain pump			PMD-12D13ST-1
	Rated	V, W	DC 13 V, 4.2 W
	Drain piping rise height from unit bottom, capacity		785 mm, 400 cc/min

3. Low Silhouette Ducted Type (F2 Type)

Indoor unit (F)

MODEL No.			**S-60MF2E5**
Power source			220 - 230 - 240 V, single-phase, 50 Hz
Controller P.C.B. Ass'y			A73C5915 (Microprocessor)
Fan (Number...diameter)		mm	Centrifugal (2...ø185)
Fan motor			
	Model...Nominal output	W	SIC-70CW-D8120-2...124 W
	Power source		280 VDC
	No. of pole...r.p.m. (230V)	rpm	8P... 1020
	Run capacitor	VAC, μF	–
Electronic expansion valve			
	Coil		UKV-A152
	Coil resistance (at 20°C)	Ω	ORG – GRY : 46 YEL – GRY : 46 RED – GRY : 46 BLK – GRY : 46
	Valve body		UKV-25D32
Heat exchanger			
	Coil		Aluminium plate fin / Copper tube
	Rows...fin pitch	mm	3...1.34
	Face area	m^2	0.269
Drain pump			PMD-12D13ST-1
	Rated	V, W	DC 13 V, 4.2 W
	Drain piping rise height from unit bottom, capacity		785 mm, 400 cc/min

3. Low Silhouette Ducted Type (F2 Type)

Indoor unit (G)

MODEL No.			**S-73MF2E5**
Power source			220 - 230 - 240 V, single-phase, 50 Hz
Controller P.C.B. Ass'y			A73C5916 (Microprocessor)
Fan (Number...diameter)		mm	Centrifugal (2...ø185)
Fan motor			
	Model...Nominal output	W	SIC-70CW-D8120-2...124 W
	Power source		280 VDC
	No. of pole...r.p.m. (230V)	rpm	8P... 1020
	Run capacitor	VAC, μF	–
Electronic expansion valve			
	Coil		UKV-A152
	Coil resistance (at 20°C)	Ω	ORG – GRY : 46 YEL – GRY : 46 RED – GRY : 46 BLK – GRY : 46
	Valve body		UKV-25D32
Heat exchanger			
	Coil		Aluminium plate fin / Copper tube
	Rows...fin pitch	mm	3...1.34
	Face area	m^2	0.269
Drain pump			PMD-12D13ST-1
	Rated	V, W	DC 13 V, 4.2 W
	Drain piping rise height from unit bottom, capacity		785 mm, 400 cc/min

3. Low Silhouette Ducted Type (F2 Type)

Indoor unit (H)

MODEL No.			**S-90MF2E5**
Power source			220 - 230 - 240 V, single-phase, 50 Hz
Controller P.C.B. Ass'y			A73C6405 (Microprocessor)
Fan (Number...diameter)		mm	Centrifugal (2...ø185)
Fan motor			
	Model...Nominal output	W	SIC-70CW-D8120-2...124 W
	Power source		280 VDC
	No. of pole...r.p.m. (230V)	rpm	8P... 1140
	Run capacitor	VAC, μF	–
Electronic expansion valve			
	Coil		UKV-A152
	Coil resistance (at 20°C)	Ω	ORG – GRY : 46 YEL – GRY : 46 RED – GRY : 46 BLK – GRY : 46
	Valve body		UKV-30D33
Heat exchanger			
	Coil		Aluminium plate fin / Copper tube
	Rows...fin pitch	mm	3...1.34
	Face area	m^2	0.269
Drain pump			PMD-12D13ST-1
	Rated	V, W	DC 13 V, 4.2 W
	Drain piping rise height from unit bottom, capacity		785 mm, 400 cc/min

4

3. Low Silhouette Ducted Type (F2 Type)

Indoor unit (I)

MODEL No.			**S-106MF2E5**
Power source			220 - 230 - 240 V, single-phase, 50 Hz
Controller P.C.B. Ass'y			A73C5917 (Microprocessor)
Fan (Number...diameter)		mm	Centrifugal (3...ø185)
Fan motor			
	Model...Nominal output	W	SIC-101CW-D8200-1...235 W
	Power source		280 VDC
	No. of pole...r.p.m. (230V)	rpm	8P... 1180
	Run capacitor	VAC, μF	–
Electronic expansion valve			
	Coil		UKV-A152
	Coil resistance (at 20°C)	Ω	ORG – GRY : 46 YEL – GRY : 46 RED – GRY : 46 BLK – GRY : 46
	Valve body		UKV-30D33
Heat exchanger			
	Coil		Aluminium plate fin / Copper tube
	Rows...fin pitch	mm	3...1.34
	Face area	m^2	0.403
Drain pump			PMD-12D13ST-1
	Rated	V, W	DC 13 V, 4.2 W
	Drain piping rise height from unit bottom, capacity		785 mm, 400 cc/min

3. Low Silhouette Ducted Type (F2 Type)

Indoor unit (J)

MODEL No.			**S-140MF2E5**
Power source			220 - 230 - 240 V, single-phase, 50 Hz
Controller P.C.B. Ass'y			A73C5918 (Microprocessor)
Fan (Number...diameter)		mm	Centrifugal (3...ø185)
Fan motor			
	Model...Nominal output	W	SIC-101CW-D8200-1...235 W
	Power source		280 VDC
	No. of pole...r.p.m. (230V)	rpm	8P... 1200
	Run capacitor	VAC, μF	–
Electronic expansion valve			
	Coil		UKV-A152
	Coil resistance (at 20°C)	Ω	ORG – GRY : 46 YEL – GRY : 46 RED – GRY : 46 BLK – GRY : 46
	Valve body		UKV-30D33
Heat exchanger			
	Coil		Aluminium plate fin / Copper tube
	Rows...fin pitch	mm	3...1.34
	Face area	m^2	0.403
Drain pump			PMD-12D13ST-1
	Rated	V, W	DC 13 V, 4.2 W
	Drain piping rise height from unit bottom, capacity		785 mm, 400 cc/min

4

3. Low Silhouette Ducted Type (F2 Type)

Indoor unit (K)

MODEL No.			**S-160MF2E5**
Power source			220 - 230 - 240 V, single-phase, 50 Hz
Controller P.C.B. Ass'y			A73C5919 (Microprocessor)
Fan (Number...diameter)		mm	Centrifugal (3...ø185)
Fan motor			
	Model...Nominal output	W	SIC-101CW-D8200-1...235 W
	Power source		280 VDC
	No. of pole...r.p.m. (230V)	rpm	8P... 1220
	Run capacitor	VAC, μF	–
Electronic expansion valve			
	Coil		UKV-A152
	Coil resistance (at 20°C)	Ω	ORG – GRY : 46 YEL – GRY : 46 RED – GRY : 46 BLK – GRY : 46
	Valve body		UKV-30D33
Heat exchanger			
	Coil		Aluminium plate fin / Copper tube
	Rows...fin pitch	mm	3...1.34
	Face area	m^2	0.403
Drain pump			PMD-12D13ST-1
	Rated	V, W	DC 13 V, 4.2 W
	Drain piping rise height from unit bottom, capacity		785 mm, 400 cc/min

3. Low Silhouette Ducted Type (F2 Type)

3-3. Dimensional Data

Indoor unit: S-22MF2E5/28MF2E5/36MF2E5/45MF2E5/56MF2E5/60MF2E5/ 73MF2E5/90MF2E5/106MF2E5/140MF2E5/160MF2E5

Unit: mm

Type	A	B	C	D	E	F
22, 28, 36, 45, 56	867	800	450 (Pitch 150 × 3)	71	592	12
60, 73, 90	1,067	1,000	750 (Pitch 150 × 5)	21	792	16
106, 140, 160	1,467	1,400	1,050 (Pitch 150 × 7)	71	1,192	20

a) Refrigerant tubing joint (liquid tube)
b) Refrigerant tubing joint (gas tube)
c) Upper drain port VP25 (O.D. 32 mm) ℓ200 flexible hose supplied
d) Bottom drain port VP25 (O.D. 32 mm)
e) Suspension lug (4 – 12 × 30 mm)
f) Power supply outlet
g) Fresh air intake port (ø150 mm)
h) Flange for flexible air outlet duct
i) Electrical component box
j) Filter

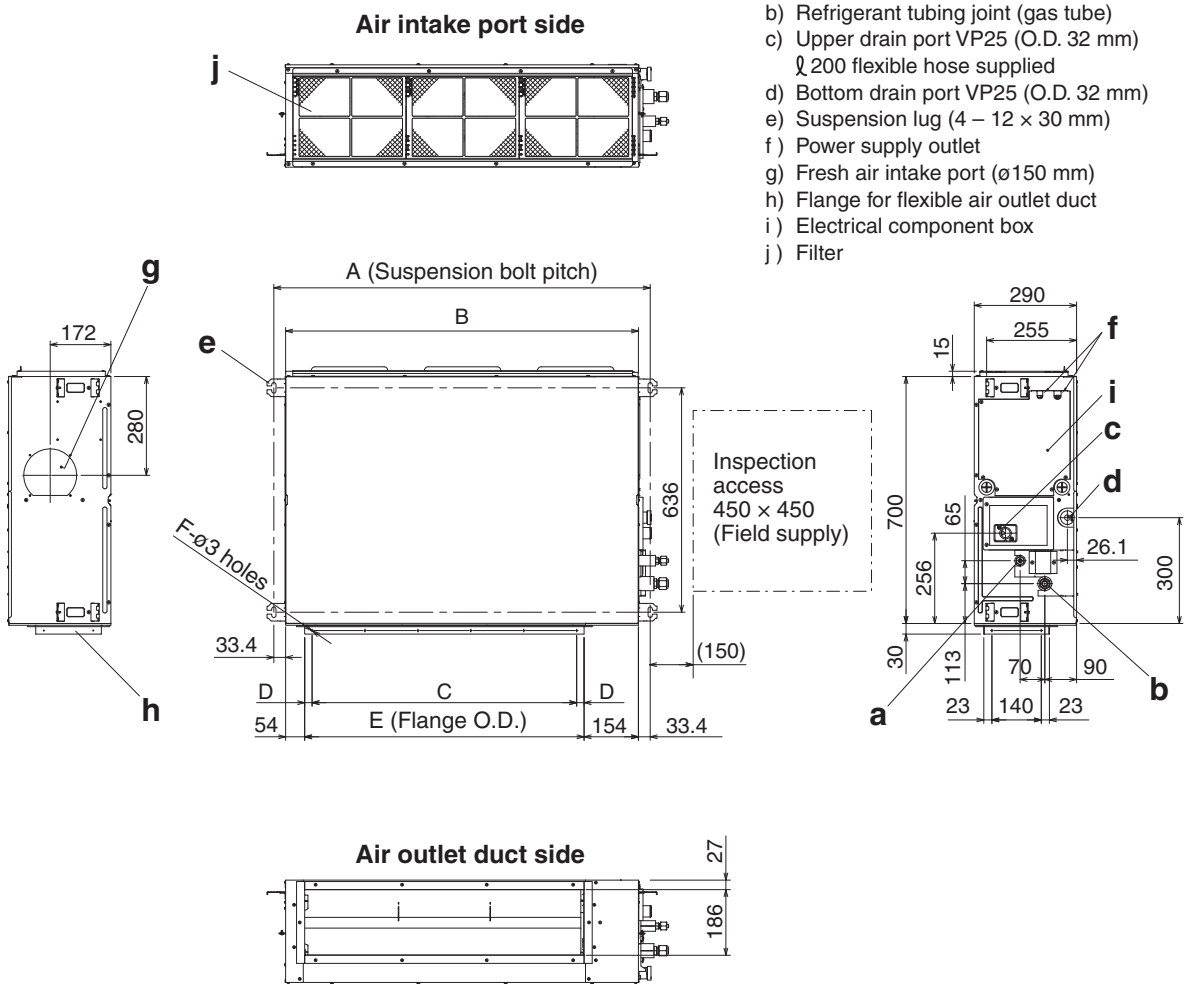

3. Low Silhouette Ducted Type (F2 Type)

3-4. Noise Criterion Curves

Only 50Hz
High
Low

MODEL	: S-22MF2E5		
SOUND LEVEL	: HIGH	33 dB(A)	
	LOW	25 dB(A)	
CONDITION	: 1.5 m directly below unit		

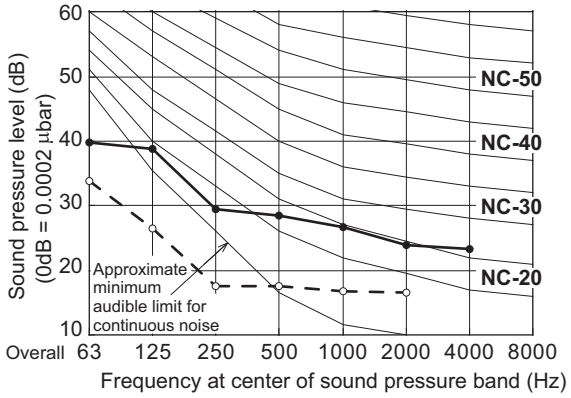

MODEL	: S-28MF2E5		
SOUND LEVEL	: HIGH	33 dB(A)	
	LOW	25 dB(A)	
CONDITION:	1.5 m directly below unit		

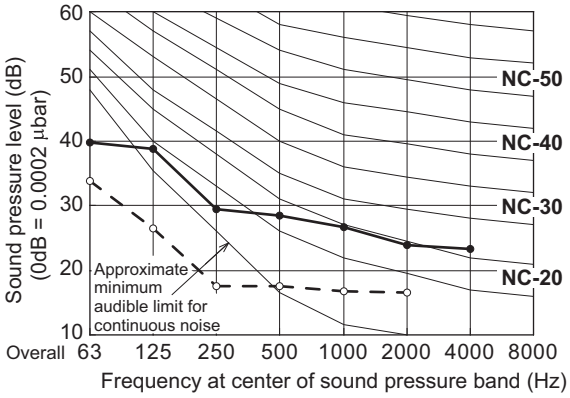

MODEL	: S-36MF2E5		
SOUND LEVEL	: HIGH	33 dB(A)	
	LOW	25 dB(A)	
CONDITION	: 1.5 m directly below unit		

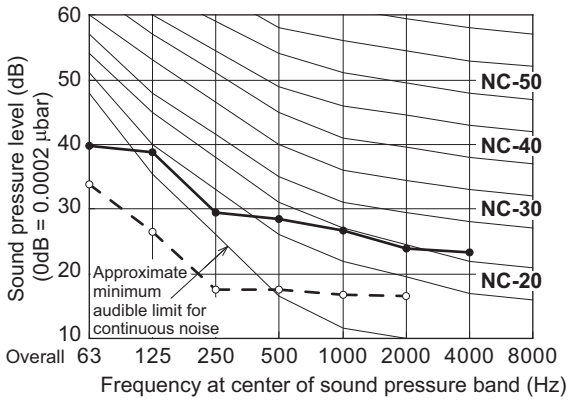

MODEL	: S-45MF2E5		
SOUND LEVEL	: HIGH	33 dB(A)	
	LOW	25 dB(A)	
CONDITION:	1.5 m directly below unit		

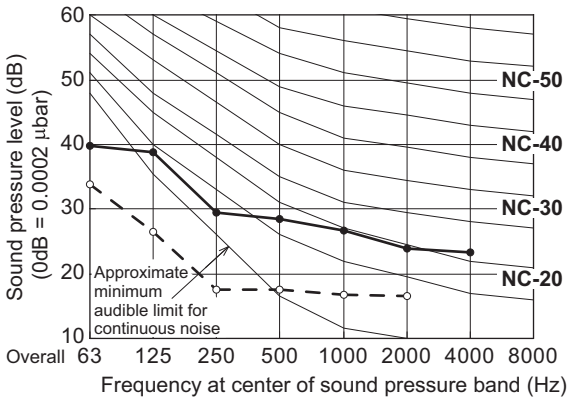

MODEL	: S-56MF2E5		
SOUND LEVEL	: HIGH	34 dB(A)	
	LOW	26 dB(A)	
CONDITION	: 1.5 m directly below unit		

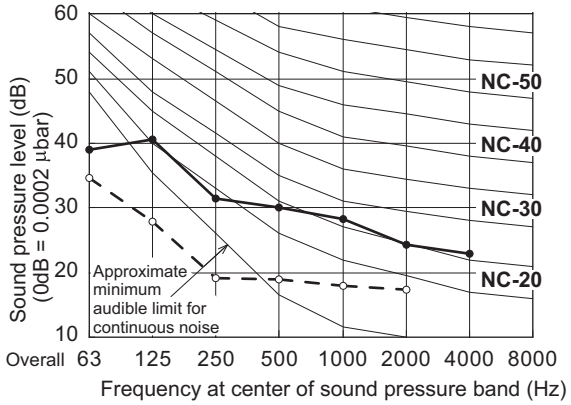

MODEL	S-60MF2E5		
SOUND LEVEL:	HIGH	35 dB(A)	
	LOW	26 dB(A)	
CONDITION:	1.5 m directly below unit		

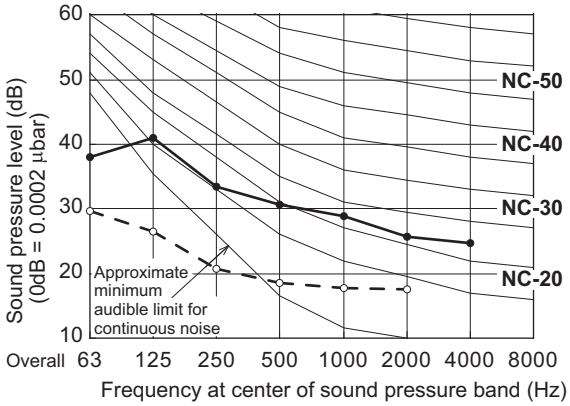

3. Low Silhouette Ducted Type (F2 Type)

Only 50Hz
High
Low

MODEL	: S-73MF2E5	
SOUND LEVEL	: HIGH	35 dB(A)
	LOW	26 dB(A)
CONDITION	: 1.5 m directly below unit	

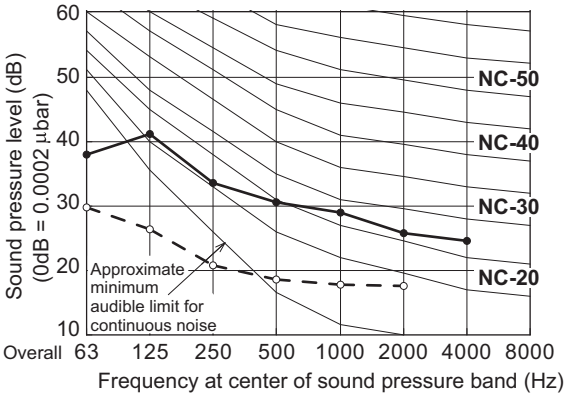

MODEL	: S-90MF2E5	
SOUND LEVEL	: HIGH	37 dB(A)
	LOW	28 dB(A)
CONDITION:	1.5 m directly below unit	

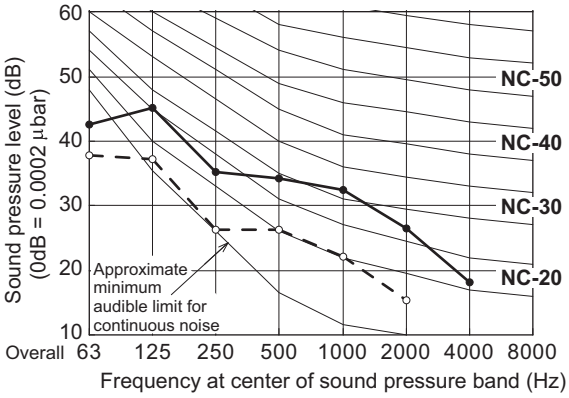

MODEL	: S-106MF2E5	
SOUND LEVEL	: HIGH	38 dB(A)
	LOW	31 dB(A)
CONDITION	: 1.5 m directly below unit	

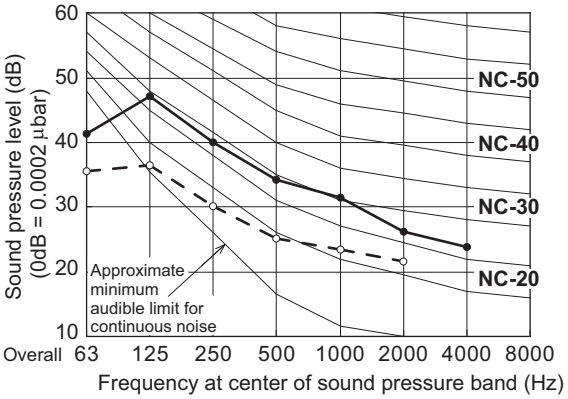

MODEL	: S-140MF2E5	
SOUND LEVEL	: HIGH	39 dB(A)
	LOW	32 dB(A)
CONDITION:	1.5 m directly below unit	

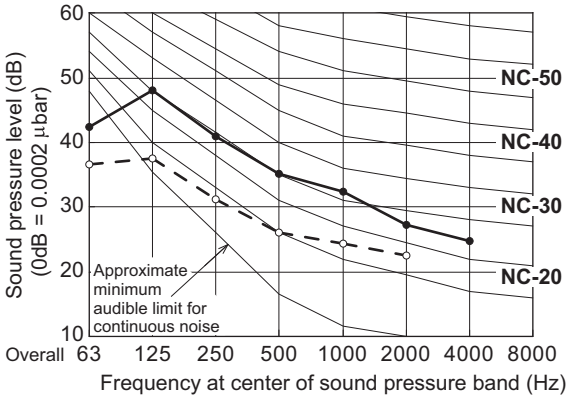

MODEL	: S-160MF2E5	
SOUND LEVEL	: HIGH	40 dB(A)
	LOW	33 dB(A)
CONDITION	: 1.5 m directly below unit	

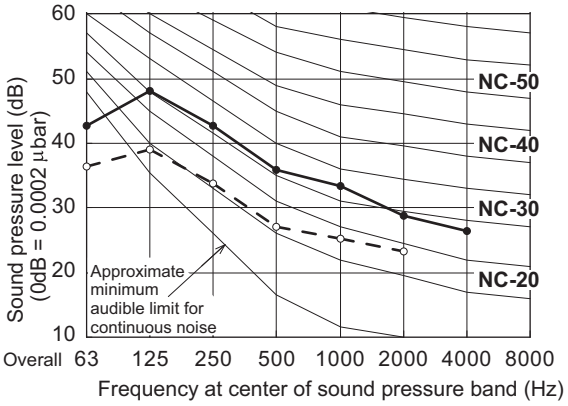

REMARKS:
1. Value obtained in the actual place where the unit is installed may be slightly higher than the values shown in this graph because of the conditions of operation, the structure of the building, the background noise and other factors.
2. The test results were obtained from an anechoic room.

NOTE

To evaluate the noise level, the maximum value of the measured sound pressure level is used. Read the value at each frequency level (on horizontal axis, center of the sound pressure band) from 63 Hz to 8000 Hz, and select the corresponding maximum value indicated on the vertical axis.

4

3. Low Silhouette Ducted Type (F2 Type)

3-5. External Static Pressure Setting

Choose one of the following methods from “a”, “b”, “c” or “d” as shown in the flow chart (within the dotted lines) and then make the setting accordingly.

a. No setting modification..... : Use-as-is at shipment (there are cases in which the setting may differ from the shipment setting when reset after once setting the external static pressure.)

b. Manual setting (set with the PC board)..... : For high static pressure. Switching method with the short-circuit connector.

c. Manual setting (set with the wired remote controller) ..... : Low static pressure ~ high static pressure

d. Auto airflow volume setting (set on the wired remote controller) .... : Air outlet volume is automatically adjusted to the rated airflow volume with the auto airflow control drive.

Flow of External Static Pressure

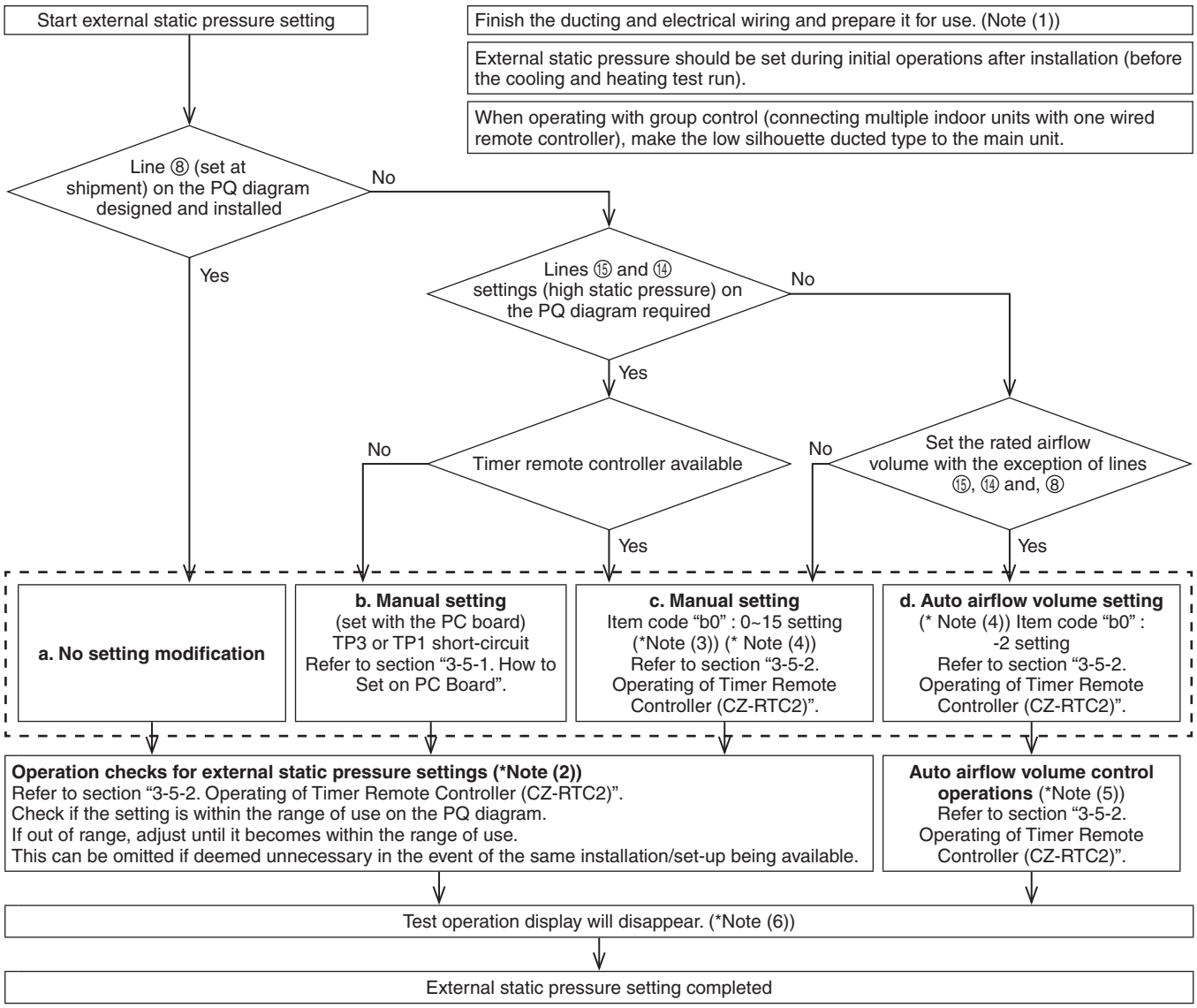

NOTE

(1) Check the following items before performing the setting-check operations or auto airflow volume operations.

1) Check to make sure that the electrical wiring and ducting have been completed. Activate the stand-by mode. In particular, make sure that the closed damper located in the middle of the duct is open, if installed. Also, make sure that air filters have been installed inside the air inlet duct.
Check to make sure air is not leaking from the joints.

2) If multiple air outlets and air inlets are included, adjust the airflow volume ratio of all of them until they meet the design airflow ratio.

3) Make sure the address setting has been completed.

(2) The operation check will be completed in approximately three minutes if the settings have been made correctly. The settings will be modified if they are out of the range of use (max. 30 minutes.). If this is not completed within 31 minutes, check whether the air speed is set to “H” or not.

3. Low Silhouette Ducted Type (F2 Type)

(3) Refer to Table 3-2 and Fig. 3-2 for details on the relationship between the value of item code “b0” and the external stati c pressure.

(4) When set in group control (connecting multiple indoor units with one wired remote controller), set each indoor unit to item code “b0”. When amending the setting after selecting [b. Manual setting] (due to airflow path changes, etc.), it is necessary to cancel [b. Manual setting] (disconnect short-circuit connector). When [b. Manual setting] has not been cancelled, [c. Manual setting] and [d. Auto airflow volume setting] will be activated if selected, but [b Manual setting] takes precedence when the power is switched back on after power outages, etc.

(5) If this is not completed within 8 minutes, check the drive mode, air speed and air inlet temperature.

(6) When set in group control (connecting multiple indoor units with one wired remote controller), the test run operations display will disappear once the external static pressure setting check or auto airflow volume control operation check have been completed for the main unit. Decisions on sub-unit complete are not possible. The test run operation display will disappear after one hour even if the external status pressure setting check or auto airflow volume control operation check have not been completed.

⚠ CAUTION

- **Be sure to check that the external static pressure is within the range for use and then make the setting. Failure to observe this may result in insufficient airflow or water leakages. Refer to Fig. 3-2 for the external static pressure setting range.**
- **There are cases in which automatic variable dampers and other mounted items may trigger the P12 alarm on systems that modify the static pressure of outdoor units when the auto airflow volume control operations or setting check operations are carried out if high static pressure in the outdoor unit is lowered. In this event, lower the dampers, etc., so that the static pressure in the outdoor unit reaches its lowest level, and then carry out the auto airflow volume control operations or setting check operations.**
- **Be sure to set the [External Static Pressure Setting] once again after amending the airflow path for the duct or air outlet after setting the external static pressure.**
- **Set the air inlet temperature within the range for use. The auto airflow volume control will not function if the air inlet temperature is over 45°C or not in the fan mode.**

3-5-1. How to Set on PC Board

1. Turn off the power breaker to halt the supply of electricity to the PC board.
2. Open the lid of electrical equipment box and check where the short-circuit pin on the indoor unit control PC board is located (Fig. 3-1)
3. Short circuit the applicable short-circuit pin in accordance with the selected short-circuit pin connected (Fig. 3-2).

   150 Pa : TP3 (2P: yellow) short-circuit

   140 Pa : TP1 (2P: red) short-circuit

   * Use the short-circuit connector (2P: yellow) supplied.

Table 3-1 Selection of connected short-circuit pins

External static pressure at the time of rated airflow volume	Short-circuit pin
Unusable	TP6 (2P: white)
150 Pa	TP3 (2P: yellow)
140 Pa	TP1 (2P: red)

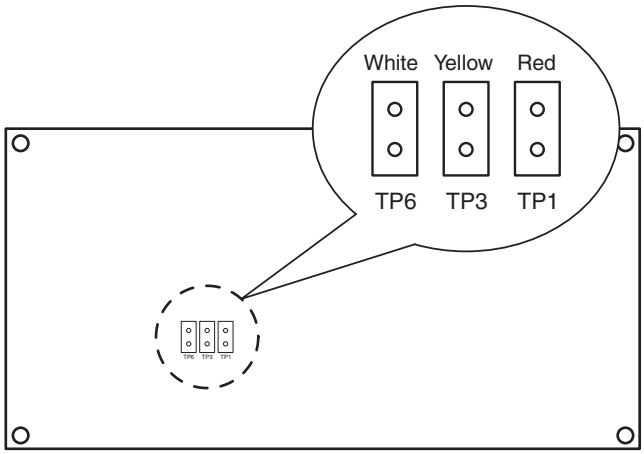

Indoor Unit control PC board

Fig. 3-1

4

3. Low Silhouette Ducted Type (F2 Type)

3-5-2. Operating the Timer Remote Controller (CZ-RTC2)

3-5-2-1. Setting Item Code "b0"

1. Press and hold down the [🔧], [CANCEL] and [SET] buttons simultaneously for 4 or more seconds.
   (SETTING, the Unit No., Item Code and Detailed Data will blink on the remote controller's LCD display.)
2. The indoor unit numbers in the group control will be sequentially displayed whenever the Unit Select button is pressed [UNIT].
   Only the fan motor for the selected indoor unit will operate during this.
3. Specify the "b0" item code by pressing the [▲]/[▼] buttons for the temperature setting buttons and confirm the values.
   ("-001" set at shipment)
4. Press the [▲]/[▼] buttons for the time to amend the values for the set data.
   Refer to table 3-2 and Fig. 3-2 and select a value between "0001" and "0015".
   Select "-002" if the auto airflow volume setting is activated.
5. Press the [SET] button.
   The display will stop blinking and remain illuminated.
6. Press the [🔧] button. The fan motor will stop operating and the LCD display will return to the normal stop mode.

3-5-2-2. Auto Airflow Volume Control Operations and External Static Pressure Setting-Check Operation

1. Press and hold down the [🔧] button for 4 or more seconds. "TEST" will be displayed on the remote controller's LCD display.
2. Press the [⏻] button to commence the test run.
   [Test Run] will be displayed on the remote controller's LCD display.
3. Select the fan mode and set it to "H" by pressing the [💨] button.

   ⚠ CAUTION

   Auto airflow volume control operations and external static pressure setting-check operations will not be performed unless [H] has been selected for the fan mode.
4. The fan motor will be activated and auto airflow volume control operations or external static pressure setting-check operations will commence.
   The power of the airflow will change while these operations are in progress.
   The external static pressure setting-check operations and auto airflow volume control operations will be completed in about 3 to 30 minutes.
   The "TEST" display will be extinguished from the remote controller's LCD display.
5. Press the [⏻] button to halt the test run.

Table 3-2 Setting the external static pressure

Indoor unit		Item code
22, 28, 36, 45, 56, 60, 73, 90	106, 140, 160	b0
External static pressure of the rated air flow volume (Pa)		
150	150	0015
140	140	0014
130	130	0013
120	120	0012
100	110	0011
70	100	0008
60	70	0006
50	50	0005
30	30	0003
10	10	0001
No auto airflow volume setting		-001
Auto airflow volume setting		-002

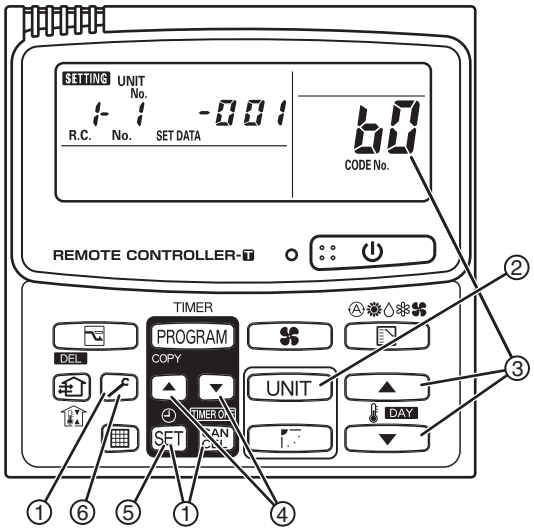

* Failure to set this parameter may result in decreased airflow and condensation.

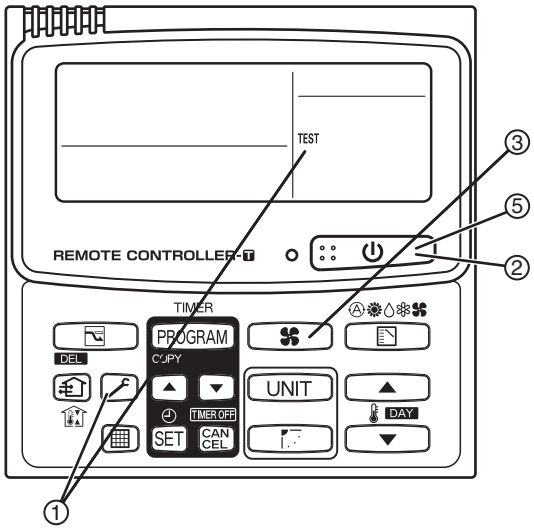

3. Low Silhouette Ducted Type (F2 Type)

Indoor Fan Performance

		Item code "bD"																			
		00 15		00 14		00 13		00 12		00 11		00 08		00 06		00 05		00 03		00 01	
		Cooling	Heating	Cooling	Heating	Cooling	Heating	Cooling	Heating	Cooling	Heating	Cooling	Heating	Cooling	Heating	Cooling	Heating	Cooling	Heating	Cooling	Heating
Tap	⑮	H	H									Setting at shipment									
	⑭			H	H																
	⑬	M	M			H	H														
	⑫							H	H												
	⑪				M					H	H										
	⑧			M			M	M	M			H	H								
	⑥	L	L			M				M	M			H	H						
	⑤											M	M			H	H				
	③				L		L	L	L	L	L			M	M	M	M	H	H		
	①			L		L						L	L	L	L			M	M	H	H
	①-2															L	L	L	L	M	M
	①-3																			L	L

22, 28, 36, 45 types

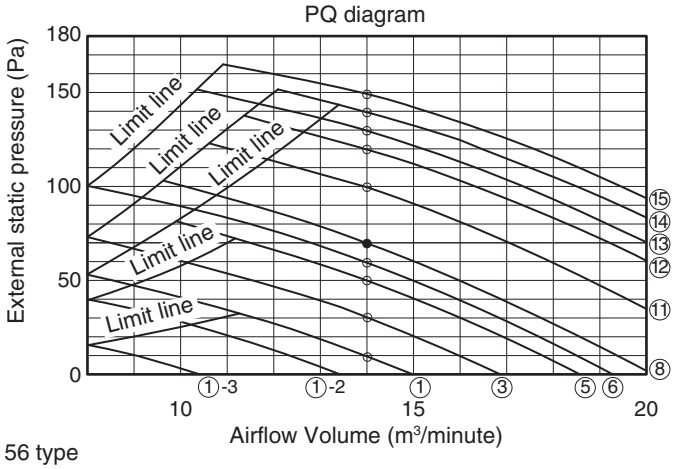

56 type

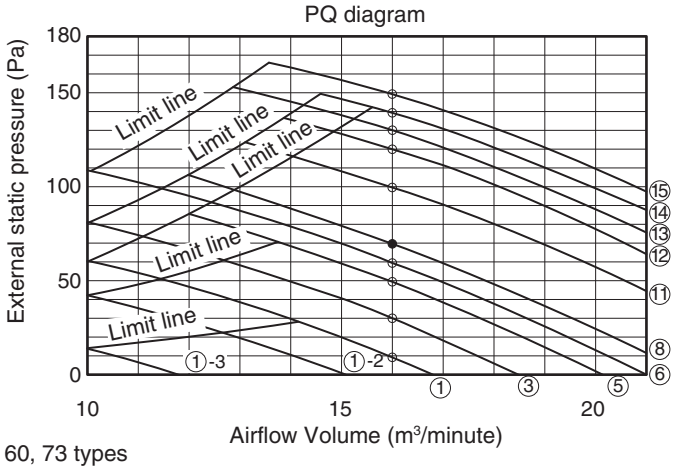

60, 73 types

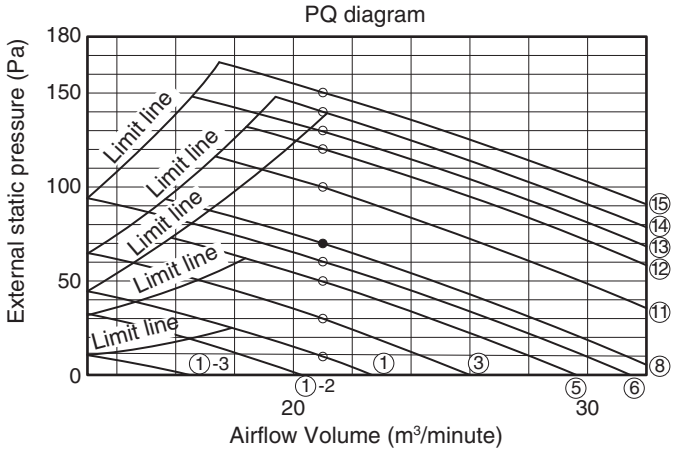

90 type

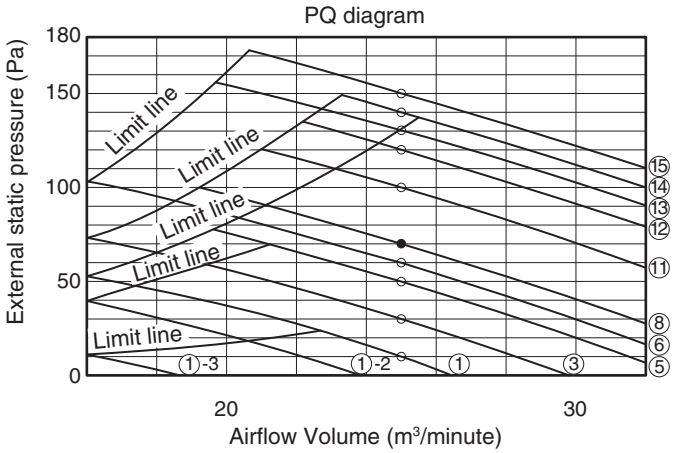

106 type

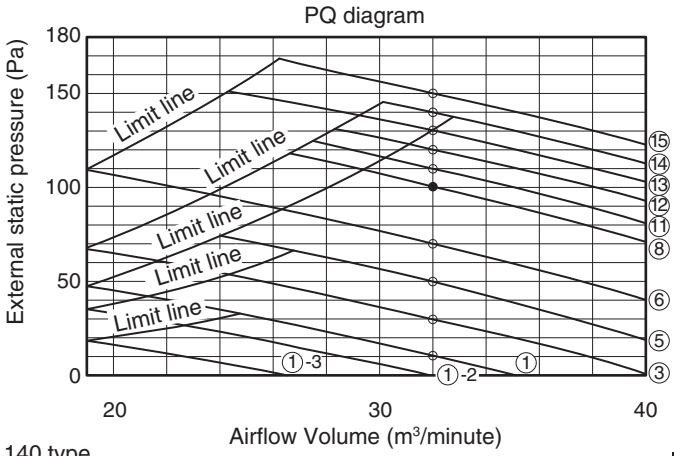

140 type

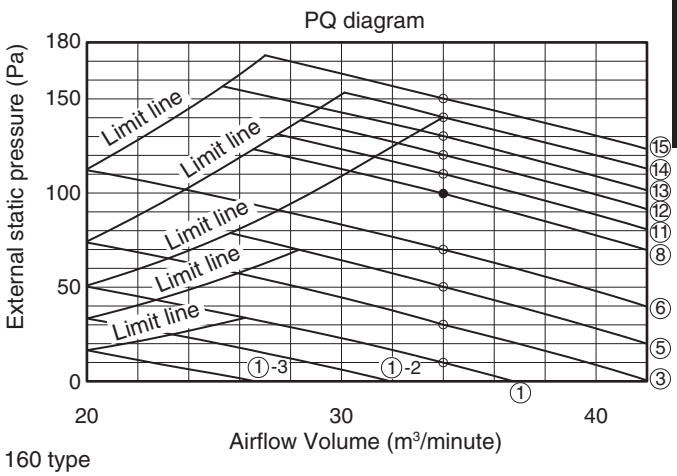

160 type

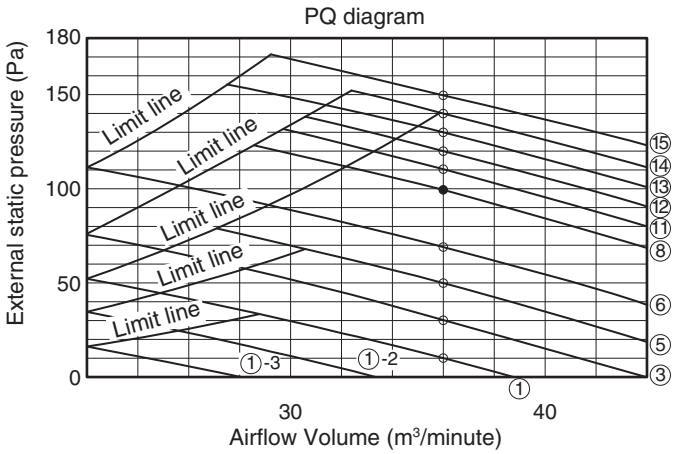

Fig. 3-2

4. 4-Way Cassette 60×60 Type (Y2 Type)

4-1. Specifications

Unit specifications (A)

INDOOR		MODEL	S-22MY2E5			S-28MY2E5			S-36MY2E5		
PANEL		MODEL	CZ-KPY3			CZ-KPY3			CZ-KPY3		
PERFORMANCE TEST CONDITION			ISO5151 / AS/NZS3823.1 / EN14285			ISO5151 / AS/NZS3823.1 / EN14285			ISO5151 / AS/NZS3823.1 / EN14285		
POWER SUPPLY		ø, Hz	1ø 50/60Hz			1ø 50/60Hz			1ø 50/60Hz		
		V	220	230	240	220	230	240	220	230	240
COOLING	CAPACITY	kW	2.2	2.2	2.2	2.8	2.8	2.8	3.6	3.6	3.6
		BTU/h	7500	7500	7500	9600	9600	9600	12300	12300	12300
		kcal/h(Fri./h)	-	-	-	-	-	-	-	-	-
	CURRENT	A	0.30			0.30			0.30		
	INPUT POWER	W	35			35			40		
	ANNUAL CONSUMPTION	W *4	-	-	-	-	-	-	-	-	-
	EER/EER CLASS	(W/W)*5/("A"~"G")	-	-	-	-	-	-	-	-	-
	EER	BTU/hW	-	-	-	-	-	-	-	-	-
	POWER FACTOR	%	-	-	-	-	-	-	-	-	-
	NOISE INDOOR (H/M/L)	dB-A	35/33/31			35/33/31			36/34/32		
		Power Level dB	50/48/46			50/48/46			51/49/47		
	NOISE OUTDOOR (H/L)	dB-A	-			-			-		
		Power Level dB	-			-			-		
HEATING	CAPACITY	kW	2.5	2.5	2.5	3.2	3.2	3.2	4.2	4.2	4.2
		BTU/h	8500	8500	8500	10900	10900	10900	14300	14300	14300
		kcal/h(Fri./h)	-	-	-	-	-	-	-	-	-
	CURRENT	A	0.25			0.30			0.30		
	INPUT POWER	W	30			30			35		
	COP/COP CLASS	(W/W)*5/("A"~"G")	-	-	-	-	-	-	-	-	-
	COP	BTU/hW	-	-	-	-	-	-	-	-	-
	POWER FACTOR	%	-	-	-	-	-	-	-	-	-
	NOISE INDOOR (H/M/L)	dB-A	35/33/29			35/33/29			36/34/30		
		Power Level dB	50/48/44			50/48/44			51/49/45		
	NOISE OUTDOOR (H/L)	dB-A	-			-			-		
		Power Level dB	-			-			-		
EXTRA LOW TEMP	CAPACITY(kW)/INPUT POWER(W)/COP		-			-			-		
Cooling	MAX CURRENT(A)/MAX INPUT POWER(W)		0.35/45			0.35/45			0.35/50		
Heating	MAX CURRENT(A)/MAX INPUT POWER(W)		0.30/40			0.30/40			0.30/45		
STARTING CURRENT(A)/COMP OUTPUT(W)			-	-	-	-	-	-	-	-	-
NETWORK IMPEDANCE (ΩMAX.) *3			-			-			-		
FM OUTPUT (ID/OD) W			40	/	-	40	/	-	40	/	-
MOISTURE REMOVAL VOLUME		L/h(Pt/h)	1.3		(2.7)	1.6		(3.4)	2.1		(4.4)
External static pressure		Pa	-			-			-		
I/D AIR FLOW	COOL	m^3/min (ft^3/min)	9.1	/	(321)	9.3	/	(328)	9.7	/	(343)
	HEAT	m^3/min (ft^3/min)	9.3	/	(328)	9.6	/	(339)	9.9	/	(350)
O/D AIR FLOW	COOL	m^3/min (ft^3/min)	-			-			-		
	HEAT	m^3/min (ft^3/min)	-			-			-		
REFRIGERANT TYPE, AMOUNT g(oz)			-			-			-		
PROD DIM	HEIGHT : H mm(inch)		260	(10-1/4)		260	(10-1/4)		260	(10-1/4)	
	WIDTH : W mm(inch)		575	(22-21/32)		575	(22-21/32)		575	(22-21/32)	
	DEPTH : D mm(inch)		575	(22-21/32)		575	(22-21/32)		575	(22-21/32)	
PAC DIM	HEIGHT : H mm		345	(13-19/32)		345	(13-19/32)		345	(13-19/32)	
	WIDTH : W mm		691	(27-7-32)		691	(27-7-32)		691	(27-7-32)	
	DEPTH : D mm		691	(27-7/32)		691	(27-7/32)		691	(27-7/32)	
MASS	(NET) kg(lb)		18	(40)		18	(40)		18	(40)	
	(GROSS) kg(lb)		22	(48)		22	(48)		22	(48)	
LAYERS LIMIT (actually)			11(12)	-		11(12)	-		11(12)	-	
Operation Condition		Cool (DBT)	-			-			-		
		Heat (DBT)	-			-			-		
PIPING	PIPE DIAMETER mm (inch)		(Liquid) ø6.35 (1/4) (Gas) ø12.7 (1/2)			(Liquid) ø6.35 (1/4) (Gas) ø12.7 (1/2)			(Liquid) ø6.35 (1/4) (Gas) ø12.7 (1/2)		
	CONNECT METHOD, STD LENGTH m (ft)		flared type			flared type			flared type		
	PIPE LENGTH RANGE m (ft)		-		(~)	-		(~)	-		(~)
	I/D & O/D HEIGHT DIFFERENCE m (ft)		-		-	-		-	-		-
	ADD GAS AMOUNT g/m (oz/ft)		-		-	-		-	-		-
	PIPE LENGTH FOR ADDITIONAL GAS m (ft)		-		-	-		-	-		-

*3: Network Impedance shall be applicable for EUROPE and CHINA models.
*4: The annual consumption is calculated by multiplying the input power at 230V(400V) by an average of 500 hours per year in cooling mode.
*5: EER and COP classification is at 230V(400V) only in accordance with EU directive 2002/31/EC.
* : In case it is necessary to indicate the air flow volume in (l/s), the value in (m^3/min.) shall be multiplied by 16.7 and rounded down the decimal point.
* : If the EUROVENT Certified models can be operated under the "extra-low" temperature condition, -7°C dry bulb and -8°C wet-bulb temperatures with rated voltage 230V shall be used.

4. 4-Way Cassette 60×60 Type (Y2 Type)

4-1. Specifications

Unit specifications (B)

INDOOR		MODEL	S-45MY2E5			S-56MY2E5					
PANEL		MODEL	CZ-KPY3			CZ-KPY3					
PERFORMANCE TEST CONDITION			ISO5151 / AS/NZS3823.1 / EN14285			ISO5151 / AS/NZS3823.1 / EN14285					
POWER SUPPLY		ø, Hz	1ø 50/60Hz			1ø 50/60Hz					
		V	220	230	240	220	230	240			
COOLING	CAPACITY	kW	4.5	4.5	4.5	5.6	5.6	5.6			
		BTU/h	15400	15400	15400	19100	19100	19100			
		kcal/h(Fri./h)	-	-	-	-	-	-			
	CURRENT	A	0.32			0.35					
	INPUT POWER	W	40			45					
	ANNUAL CONSUMPTION	W *4	-	-	-	-	-	-			
	EER/EER CLASS	(W/W)*5/("A"~"G")	-	-	-	-	-	-			
	EER	BTU/hW	-	-	-	-	-	-			
	POWER FACTOR	%	-	-	-	-	-	-			
	NOISE INDOOR (H/M/L)	dB-A	38/36/33			40/37/34					
		Power Level dB	53/51/48			55/52/49					
	NOISE OUTDOOR (H/L)	dB-A	-			-					
		Power Level dB	-			-					
HEATING	CAPACITY	kW	5.0	5.0	5.0	6.3	6.3	6.3			
		BTU/h	17100	17100	17100	21500	21500	21500			
		kcal/h(Fri./h)	-	-	-	-	-	-			
	CURRENT	A	0.30			0.35					
	INPUT POWER	W	35			40					
	COP/COP CLASS	(W/W)*5/("A"~"G")	-	-	-	-	-	-			
	COP	BTU/hW	-	-	-	-	-	-			
	POWER FACTOR	%	-	-	-	-	-	-			
	NOISE INDOOR (H/M/L)	dB-A	38/36/32			40/37/34					
		Power Level dB	53/51/47			55/52/49					
	NOISE OUTDOOR (H/L)	dB-A	-			-					
		Power Level dB	-			-					
EXTRA LOW TEMP	CAPACITY(kW)/INPUT POWER(W)/COP		-			-					
Cooling	MAX CURRENT(A)/MAX INPUT POWER(W)		0.37/50			0.40/55					
Heating	MAX CURRENT(A)/MAX INPUT POWER(W)		0.35/45			0.40/50					
STARTING CURRENT(A)/COMP OUTPUT(W)			-	-	-	-	-	-			
NETWORK IMPEDANCE (ΩMAX.) *3			-			-					
FM OUTPUT (ID/OD) W			40	/		40	/				
MOISTURE REMOVAL VOLUME		L/h(Pt/h)	2.5		(5.3)	3.2		(6.7)			
External static pressure		Pa	-			-					
I/D AIR FLOW	COOL	m^3/min (ft^3/min)	10.0	/	(353)	10.4	/	(367)			
	HEAT	m^3/min (ft^3/min)	10.3	/	(364)	11.1	/	(392)			
O/D AIR FLOW	COOL	m^3/min (ft^3/min)	-			-					
	HEAT	m^3/min (ft^3/min)	-			-					
REFRIGERANT TYPE, AMOUNT g(oz)			-			-					
PRO DIM	HEIGHT : H mm(inch)		260	(10-1/4)		260	(10-1/4)				
	WIDTH : W mm(inch)		575	(22-21/32)		575	(22-21/32)				
	DEPTH : D mm(inch)		575	(22-21/32)		575	(22-21/32)				
PAC DIM	HEIGHT : H mm		345	(13-19/32)		345	(13-19/32)				
	WIDTH : W mm		691	(27-7/32)		691	(27-7/32)				
	DEPTH : D mm		691	(27-7/32)		691	(27-7/32)				
MASS	(NET) kg(lb)		18	(40)		18	(40)				
	(GROSS) kg(lb)		22	(48)		22	(48)				
LAYERS LIMIT (actually)			11(12)	-		11(12)	-				
Operation Condition		Cool (DBT)	-			-					
		Heat (DBT)	-			-					
PIPING	PIPE DIAMETER mm (inch)		(Liquid) ø6.35 (1/4) (Gas) ø12.7 (1/2)			(Liquid) ø6.35 (1/4) (Gas) ø12.7 (1/2)					
	CONNECT METHOD, STD LENGTH m (ft)		flared type			flared type					
	PIPE LENGTH RANGE m (ft)		-		(~)	-		(~)			
	I/D & O/D HEIGHT DIFFERENCE m (ft)		-		-	-		-			
	ADD GAS AMOUNT g/m (oz/ft)		-		-	-		-			
	PIPE LENGTH FOR ADDITIONAL GAS m (ft)		-		-	-		-			

*3: Network Impedance shall be applicable for EUROPE and CHINA models.
*4: The annual consumption is calculated by multiplying the input power at 230V(400V) by an average of 500 hours per year in cooling mode.
*5: EER and COP classification is at 230V(400V) only in accordance with EU directive 2002/31/EC.
* : In case it is necessary to indicate the air flow volume in (l/s), the value in (m^3/min.) shall be multiplied by 16.7 and rounded down the decimal point.
* : If the EUROVENT Certified models can be operated under the "extra-low" temperature condition, -7°C dry bulb and -8°C wet-bulb temperatures with rated voltage 230V shall be used.

4. 4-Way Cassette 60×60 Type (Y2 Type)

4-2. Major Component Specifications

Indoor unit (A)

MODEL No.			S-22MY2E5
Power source			220 - 230 - 240 V, single-phase, 50/60 Hz
Controller P.C.B. Ass'y			A73C7569 (CR-22MY2E5 : Microprocessor)
Fan (Number...diameter)		mm	Turbo (1...ø333.4, L147)
Fan motor			
	Model...Nominal output	W	NFD-62FW-F240-2...40 W
	Power source		325 VDC
	No. of pole...r.p.m. (230V, High)	rpm	8P...580 / 590
	Coil resistance (Ambient temperature 20°C)	Ω	–
	Run capacitor	VAC, μF	–
Safety device			
Electronic expansion valve			
	Coil		CAM-MD12MS
	Coil resistance (at 20°C)	Ω	WHT – RED : 46 ± 5% ORG – RED : 46 ± 5% YEL – RED : 46 ± 5% BLU – RED : 46 ± 5%
	Valve body		CAM-BD18MS-2
Heat exchanger			
	Coil		Aluminium plate fin / Copper tube
	Rows...fin pitch	mm	2...1.4
	Face area	m^2	0.263
Panel			
	Model No.		CZ-KPY3
	Auto louver motor		MP24Z
	Coil resistance (at 25°C)	Ω	250 ± 7.5%
Drain pump			
	Rated	V, W	AC 230 V, 12 W
	Height from unit bottom & capacity		850 mm, 400 cc/min

4

4. 4-Way Cassette 60×60 Type (Y2 Type)

Indoor unit (B)

MODEL No.			**S-28MY2E5**
Power source			220 - 230 - 240 V, single-phase, 50/60 Hz
Controller P.C.B. Ass'y			A73C7569 (CR-22MY2E5 : Microprocessor)
Fan (Number...diameter)		mm	Turbo (1...ø333.4, L147)
Fan motor			
	Model...Nominal output	W	NFD-62FW-F240-2...40 W
	Power source		325 VDC
	No. of pole...r.p.m. (230V, High)	rpm	8P...590 / 600
	Coil resistance (Ambient temperature 20°C)	Ω	–
	Run capacitor	VAC, μF	–
Safety device			
Electronic expansion valve			
	Coil		CAM-MD12MS
	Coil resistance (at 20°C)	Ω	WHT – RED : 46 ± 5% ORG – RED : 46 ± 5% YEL – RED : 46 ± 5% BLU – RED : 46 ± 5%
	Valve body		CAM-BD18MS-2
Heat exchanger			
	Coil		Aluminium plate fin / Copper tube
	Rows...fin pitch	mm	2...1.4
	Face area	m^2	0.263
Panel			
	Model No.		CZ-KPY3
	Auto louver motor		MP24Z
	Coil resistance (at 25°C)	Ω	250 ± 7.5%
Drain pump			
	Rated	V, W	AC 230 V, 12 W
	Height from unit bottom & capacity		850 mm, 400 cc/min

4. 4-Way Cassette 60×60 Type (Y2 Type)

Indoor unit (C)

MODEL No.			**S-36MY2E5**
Power source			220 - 230 - 240 V, single-phase, 50/60 Hz
Controller P.C.B. Ass'y			A73C7569 (CR-22MY2E5 : Microprocessor)
Fan (Number...diameter)		mm	Turbo (1...ø333.4, L147)
Fan motor			
	Model...Nominal output	W	NFD-62FW-F240-2...40 W
	Power source		325 VDC
	No. of pole...r.p.m. (230V, High)	rpm	8P...610 / 620
	Coil resistance (Ambient temperature 20°C)	Ω	–
	Run capacitor	VAC, μF	–
Safety device			
Electronic expansion valve			
	Coil		CAM-MD12MS
	Coil resistance (at 20°C)	Ω	WHT – RED : 46 ± 5% ORG – RED : 46 ± 5% YEL – RED : 46 ± 5% BLU – RED : 46 ± 5%
	Valve body		CAM-BD18MS-2
Heat exchanger			
	Coil		Aluminium plate fin / Copper tube
	Rows...fin pitch	mm	2...1.4
	Face area	m^2	0.263
Panel			
	Model No.		CZ-KPY3
	Auto louver motor		MP24Z
	Coil resistance (at 25°C)	Ω	250 ± 7.5%
Drain pump			
	Rated	V, W	AC 230 V, 12 W
	Height from unit bottom & capacity		850 mm, 400 cc/min

4. 4-Way Cassette 60×60 Type (Y2 Type)

Indoor unit (D)

MODEL No.			**S-45MY2E5**
Power source			220 - 230 - 240 V, single-phase, 50/60 Hz
Controller P.C.B. Ass'y			A73C7569 (CR-22MY2E5 : Microprocessor)
Fan (Number...diameter)		mm	Turbo (1...ø333.4, L147)
Fan motor			
	Model...Nominal output	W	NFD-62FW-F240-2...40 W
	Power source		325 VDC
	No. of pole...r.p.m. (230V, High)	rpm	8P...630 / 650
	Coil resistance (Ambient temperature 20°C)	Ω	–
	Run capacitor	VAC, μF	–
Safety device			
Electronic expansion valve			
	Coil		CAM-MD12MS
	Coil resistance (at 20°C)	Ω	WHT – RED : 46 ± 5% ORG – RED : 46 ± 5% YEL – RED : 46 ± 5% BLU – RED : 46 ± 5%
	Valve body		CAM-BD18MS-2
Heat exchanger			
	Coil		Aluminium plate fin / Copper tube
	Rows...fin pitch	mm	2...1.4
	Face area	m^2	0.263
Panel			
	Model No.		CZ-KPY3
	Auto louver motor		MP24Z
	Coil resistance (at 25°C)	Ω	250 ± 7.5%
Drain pump			
	Rated	V, W	AC 230 V, 12 W
	Height from unit bottom & capacity		850 mm, 400 cc/min

4. 4-Way Cassette 60×60 Type (Y2 Type)

Indoor unit (E)

MODEL No.			**S-56MY2E5**
Power source			220 - 230 - 240 V, single-phase, 50/60 Hz
Controller P.C.B. Ass'y			A73C7569 (CR-22MY2E5 : Microprocessor)
Fan (Number...diameter)		mm	Turbo (1...ø333.4, L147)
Fan motor			
	Model...Nominal output	W	NFD-62FW-F240-2...40 W
	Power source		325 VDC
	No. of pole...r.p.m. (230V, High)	rpm	8P...660 / 700
	Coil resistance (Ambient temperature 20°C)	Ω	–
	Run capacitor	VAC, μF	–
Safety device			
Electronic expansion valve			
	Coil		CAM-MD12MS
	Coil resistance (at 20°C)	Ω	WHT – RED : 46 ± 5% ORG – RED : 46 ± 5% YEL – RED : 46 ± 5% BLU – RED : 46 ± 5%
	Valve body		CAM-BD18MS-2
Heat exchanger			
	Coil		Aluminium plate fin / Copper tube
	Rows...fin pitch	mm	2...1.4
	Face area	m^2	0.263
Panel			
	Model No.		CZ-KPY3
	Auto louver motor		MP24Z
	Coil resistance (at 25°C)	Ω	250 ± 7.5%
Drain pump			
	Rated	V, W	AC 230 V, 12 W
	Height from unit bottom & capacity		850 mm, 400 cc/min

4. 4-Way Cassette 60×60 Type (Y2 Type)

4-3. Dimensional Data

Indoor unit : S-22MY2E5 / 28MY2E5 / 36MY2E5 / 45MY2E5 / 56MY2E5

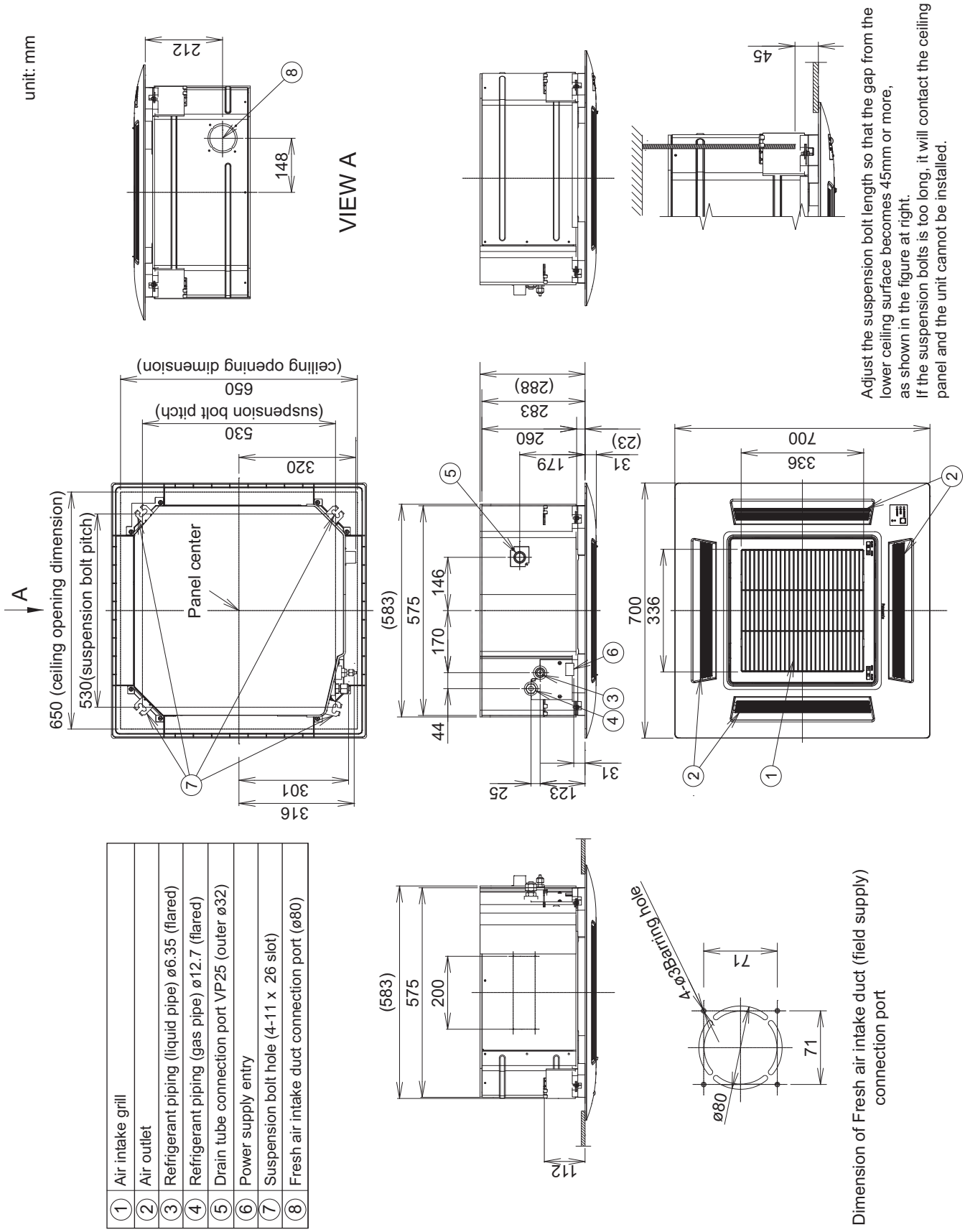

①	Air intake grill
②	Air outlet
③	Refrigerant piping (liquid pipe) ø6.35 (flared)
④	Refrigerant piping (gas pipe) ø12.7 (flared)
⑤	Drain tube connection port VP25 (outer ø32)
⑥	Power supply entry
⑦	Suspension bolt hole (4-11 x 26 slot)
⑧	Fresh air intake duct connection port (ø80)

4

4. 4-Way Cassette 60×60 Type (Y2 Type)

4-4. Noise Criterion Curves

Both 50Hz and 60Hz
Strong
Weak

Cooling

MODEL : S-22MY2E5

SOUND LEVEL : STRONG 35 dB(A)
WEAK 31 dB(A)

CONDITION : 1.5 m directly below unit

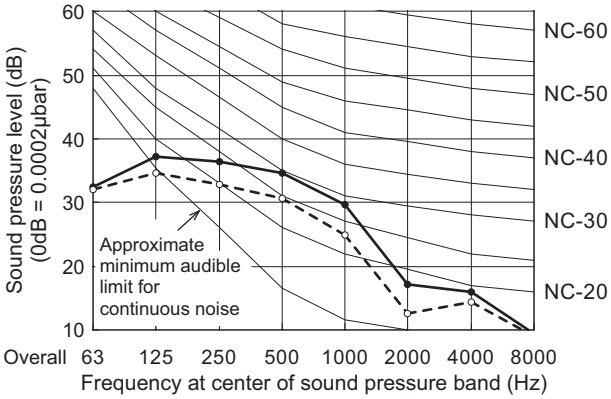

Heating

MODEL : S-22MY2E5

SOUND LEVEL : STRONG 35 dB(A)
WEAK 29 dB(A)

CONDITION : 1.5 m directly below unit

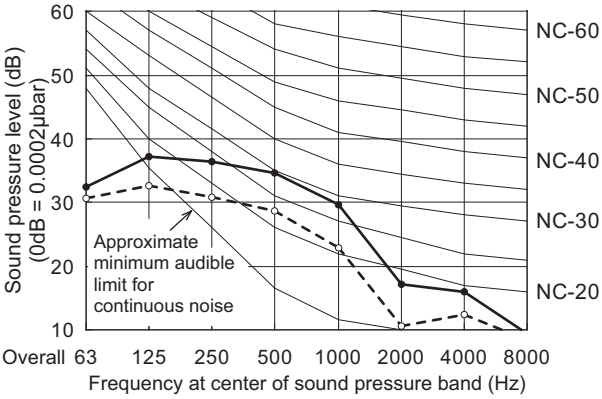

Cooling

MODEL : S-28MY2E5

SOUND LEVEL : STRONG 35 dB(A)
WEAK 31 dB(A)

CONDITION : 1.5 m directly below unit

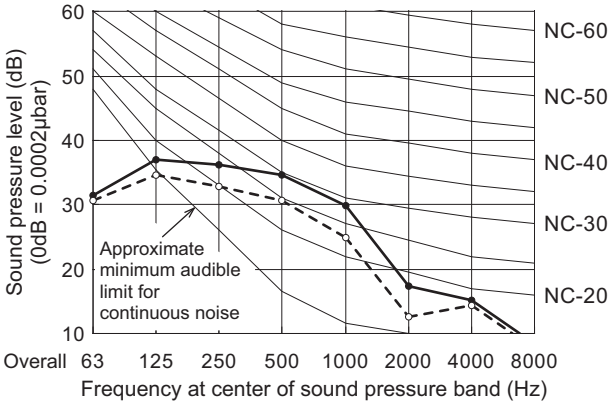

Heating

MODEL : S-28MY2E5

SOUND LEVEL : STRONG 35 dB(A)
WEAK 29 dB(A)

CONDITION : 1.5 m directly below unit

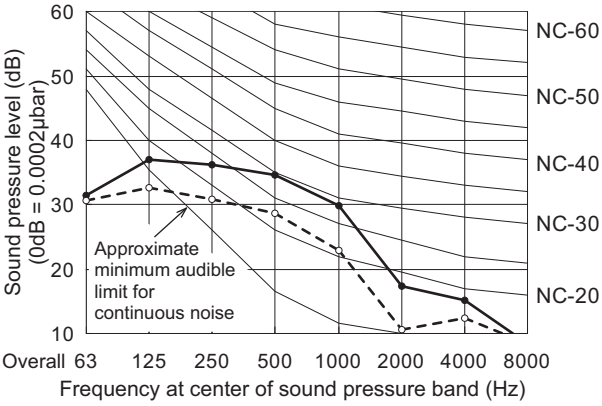

Cooling

MODEL : S-36MY2E5

SOUND LEVEL : STRONG 36 dB(A)
WEAK 32 dB(A)

CONDITION : 1.5 m directly below unit

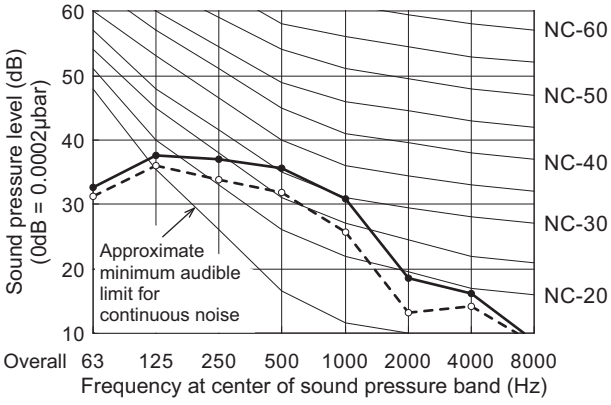

Heating

MODEL : S-36MY2E5

SOUND LEVEL : STRONG 36 dB(A)
WEAK 30 dB(A)

CONDITION : 1.5 m directly below unit

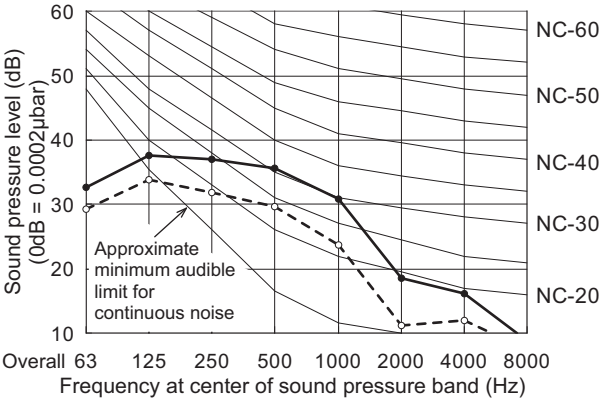

4. 4-Way Cassette 60×60 Type (Y2 Type)

Both 50Hz and 60Hz
Strong
Weak

Cooling

MODEL : S-45MY2E5

SOUND LEVEL : STRONG 38 dB(A)
WEAK 33 dB(A)

CONDITION : 1.5 m directly below unit

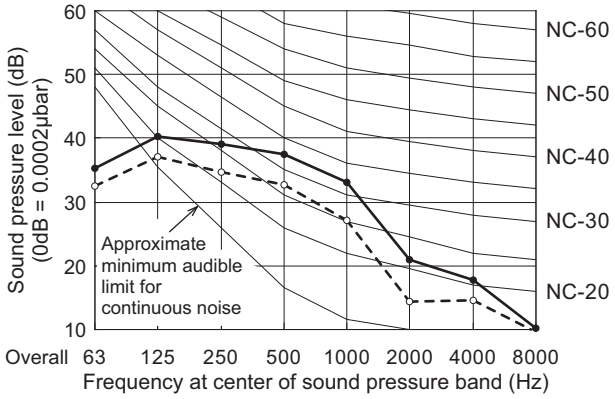

Heating

MODEL : S-45MY2E5

SOUND LEVEL : STRONG 38 dB(A)
WEAK 32 dB(A)

CONDITION : 1.5 m directly below unit

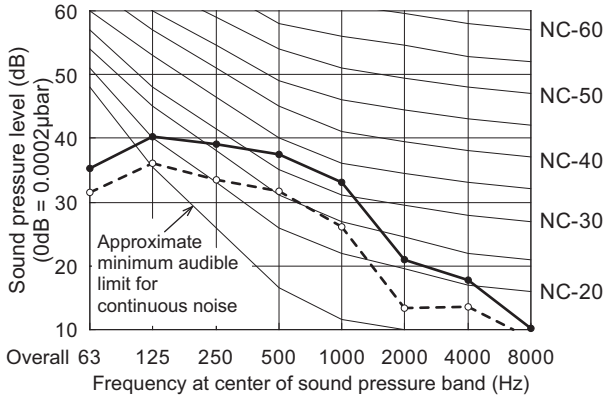

Cooling

MODEL : S-56MY2E5

SOUND LEVEL : STRONG 40 dB(A)
WEAK 34 dB(A)

CONDITION : 1.5 m directly below unit

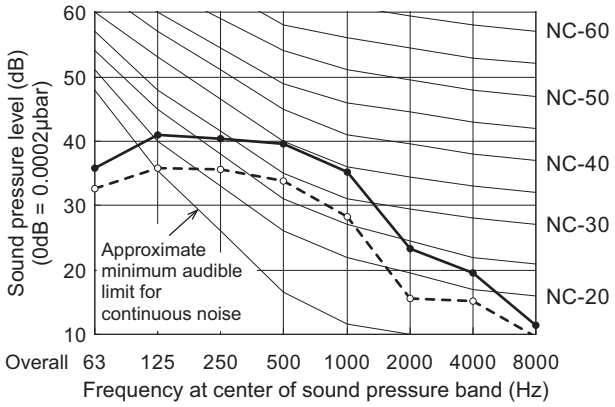

Heating

MODEL : S-56MY2E5

SOUND LEVEL : STRONG 40 dB(A)
WEAK 34 dB(A)

CONDITION : 1.5 m directly below unit

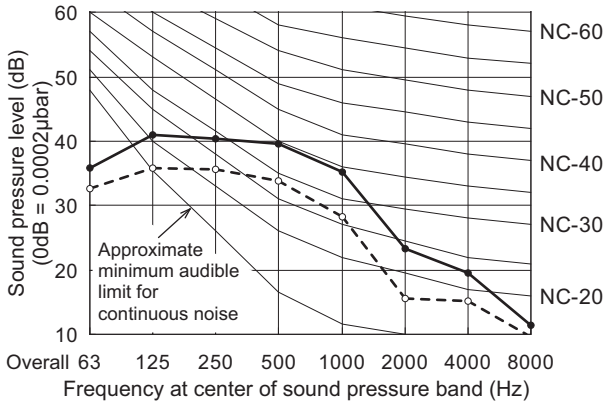

4

4. 4-Way Cassette 60×60 Type (Y2 Type)

4-5. Air Flow Distance / Temperature Chart
S-22MY2E5 / 28MY2E5 / 36MY2E5

Heating : Distribution of wind velocity

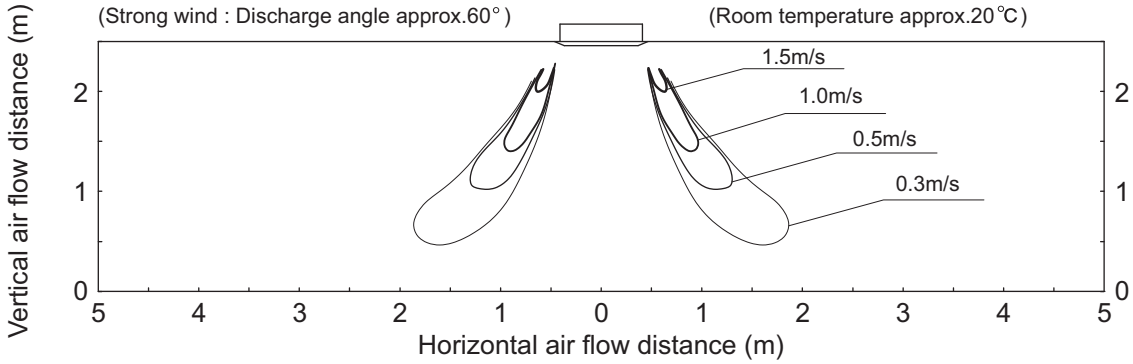

Heating : Distribution of temperature

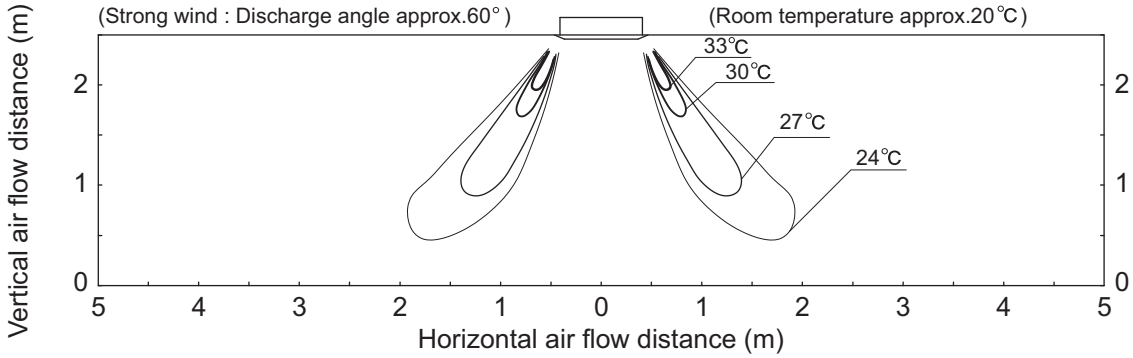

4

Cooling : Distribution of wind velocity

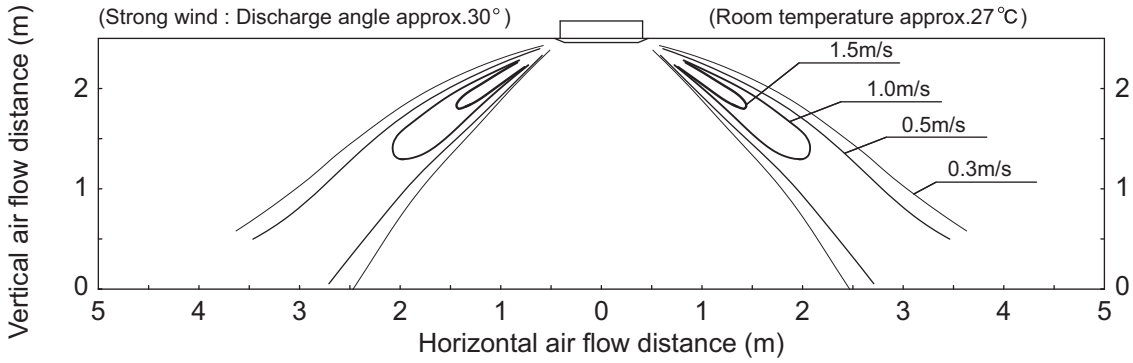

Cooling : Distribution of temperature

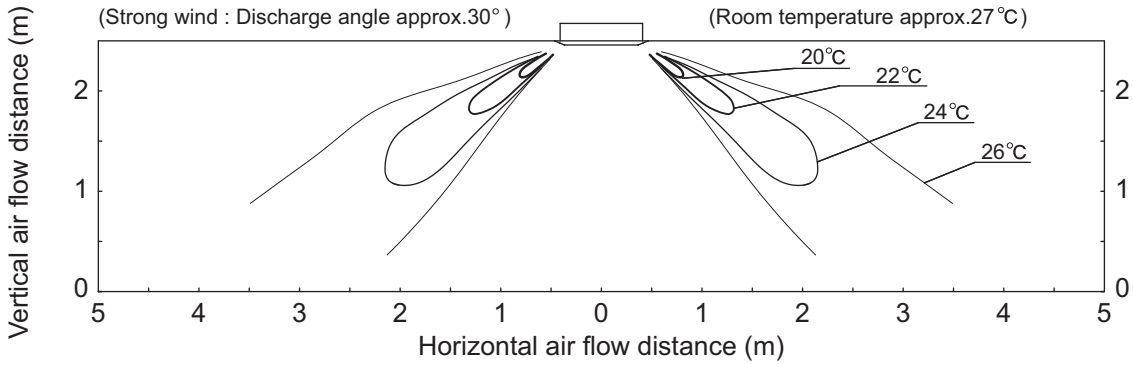

4. 4-Way Cassette 60×60 Type (Y2 Type)

S-45MY2E5 / 56MY2E5

Heating : Distribution of wind velocity

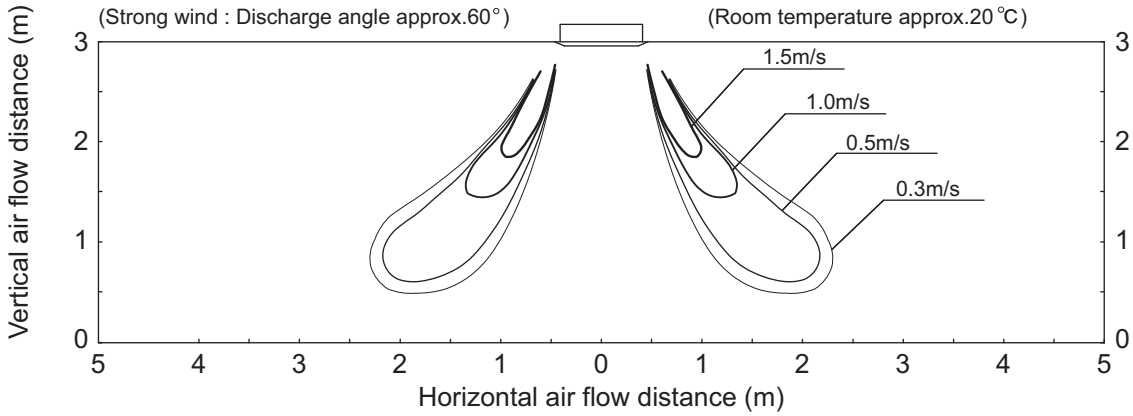

Heating : Distribution of temperature

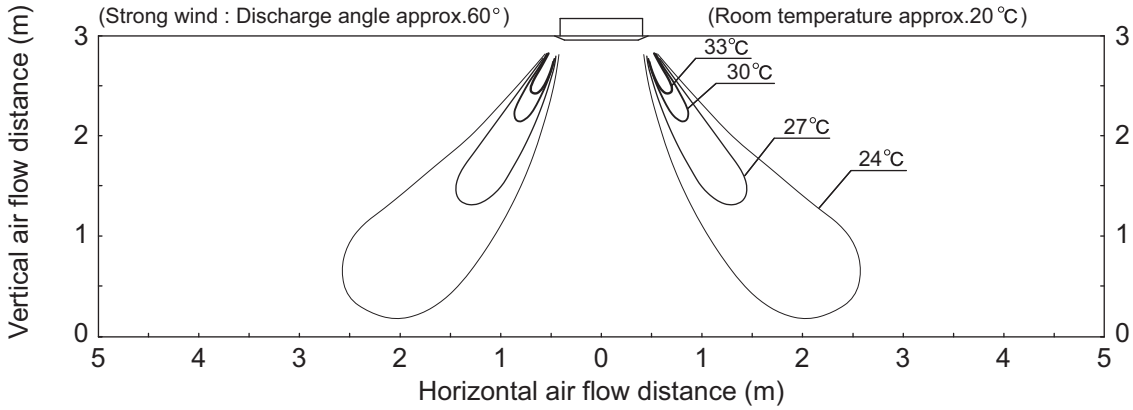

Cooling : Distribution of wind velocity

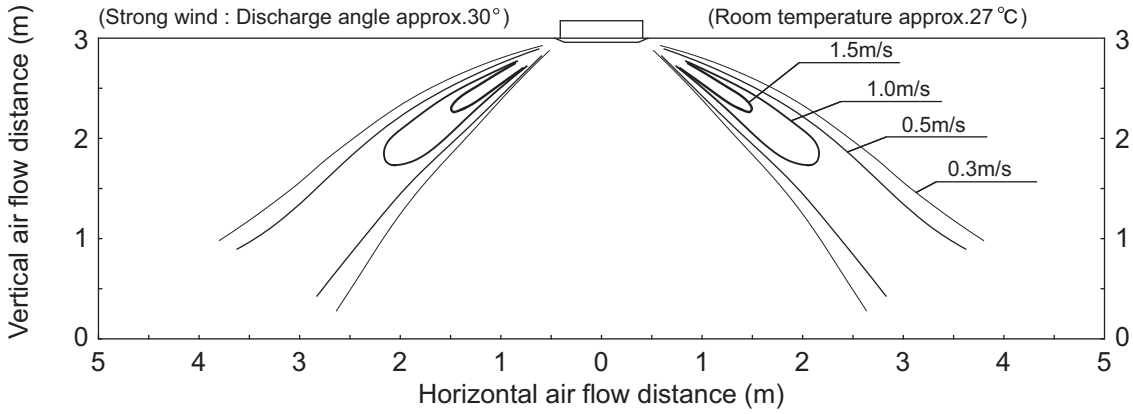

Cooling : Distribution of temperature

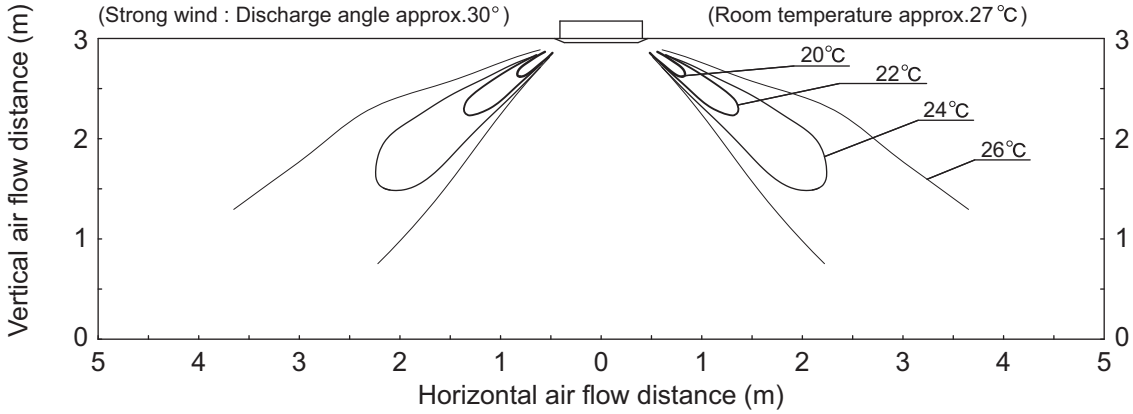

5. Wall Mounted Type (K2 Type)

5-1. Specifications

Unit specifications (A)

INDOOR		MODEL	S-22MK2E5			S-28MK2E5			S-36MK2E5		
PANEL		MODEL	-			-			-		
PERFORMANCE TEST CONDITION			ISO5151 / AS/NZS3823.1 / EN14285			ISO5151 / AS/NZS3823.1 / EN14285			ISO5151 / AS/NZS3823.1 / EN14285		
POWER SUPPLY		ø, Hz	1ø 50/60Hz			1ø 50/60Hz			1ø 50/60Hz		
		V	220	230	240	220	230	240	220	230	240
COOLING	CAPACITY	kW	2.2	2.2	2.2	2.8	2.8	2.8	3.6	3.6	3.6
		BTU/h	7500	7500	7500	9600	9600	9600	12300	12300	12300
		kcal/h(Fri./h)	-	-	-	-	-	-	-	-	-
	CURRENT	A	0.21	0.21	0.21	0.23	0.23	0.23	0.25	0.25	0.25
	INPUT POWER	W	25	25	25	25	25	25	30	30	30
	ANNUAL CONSUMPTION	W *4	-	-	-	-	-	-	-	-	-
	EER/EER CLASS	(W/W)*5/("A"~"G")	-	-	-	-	-	-	-	-	-
	EER	BTU/hW	-	-	-	-	-	-	-	-	-
	POWER FACTOR	%	-	-	-	-	-	-	-	-	-
	NOISE INDOOR (H/M/L)	dB-A	36/33/29			37/34/29			40/36/29		
		Power Level dB	51/48/44			52/49/44			55/51/44		
	NOISE OUTDOOR (H/L)	dB-A	-			-			-		
		Power Level dB	-			-			-		
HEATING	CAPACITY	kW	2.5	2.5	2.5	3.2	3.2	3.2	4.2	4.2	4.2
		BTU/h	8500	8500	8500	10900	10900	10900	14300	14300	14300
		kcal/h(Fri./h)	-	-	-	-	-	-	-	-	-
	CURRENT	A	0.21	0.21	0.21	0.23	0.23	0.23	0.25	0.25	0.25
	INPUT POWER	W	25	25	25	25	25	25	30	30	30
	COP/COP CLASS	(W/W)*5/("A"~"G")	-	-	-	-	-	-	-	-	-
	COP	BTU/hW	-	-	-	-	-	-	-	-	-
	POWER FACTOR	%	-	-	-	-	-	-	-	-	-
	NOISE INDOOR (H/M/L)	dB-A	36/33/29			37/34/29			40/36/29		
		Power Level dB	51/48/44			52/49/44			55/51/44		
	NOISE OUTDOOR (H/L)	dB-A	-			-			-		
		Power Level dB	-			-			-		
EXTRA LOW TEMP	CAPACITY(kW)/INPUT POWER(W)/COP		-			-			-		
Cooling	MAX CURRENT(A)/MAX INPUT POWER(W)		0.30/35			0.35/35			0.40/40		
Heating	MAX CURRENT(A)/MAX INPUT POWER(W)		0.30/35			0.35/35			0.40/40		
STARTING CURRENT(A)/COMP OUTPUT(W)			-	-	-	-	-	-	-	-	-
NETWORK IMPEDANCE (ΩMAX.) *3			-			-			-		
FM OUTPUT (ID/OD) W			30	/	-	30	/	-	30	/	-
MOISTURE REMOVAL VOLUME		L/h(Pt/h)	1.3		(2.7)	1.6		(3.4)	2.1		(4.4)
External static pressure		Pa	-			-			-		
I/D AIR FLOW	COOL	m^3/min (ft^3/min)	9.0	/	(318)	9.5	/	(335)	10.9	/	(385)
	HEAT	m^3/min (ft^3/min)	9.2	/	(352)	9.7	/	(343)	11.2	/	(396)
O/D AIR FLOW	COOL	m^3/min (ft^3/min)	-			-			-		
	HEAT	m^3/min (ft^3/min)	-			-			-		
REFRIGERANT TYPE, AMOUNT g(oz)			-			-			-		
PRO DIM	HEIGHT : H mm(inch)		290	(11-7/16)		290	(11-7/16)		290	(11-7/16)	
	WIDTH : W mm(inch)		870	(34-9/32)		870	(34-9/32)		870	(34-9/32)	
	DEPTH : D mm(inch)		214	(8-7/16)		214	(8-7/16)		214	(8-7/16)	
PAC DIM	HEIGHT : H mm		251	(9-7/8)		251	(9-7/8)		251	(9-7/8)	
	WIDTH : W mm		960	(37-25/32)		960	(37-25/32)		960	(37-25/32)	
	DEPTH : D mm		360	(14-3/16)		360	(14-3/16)		360	(14-3/16)	
MASS	(NET) kg(lb)		9	(20)		9	(20)		9	(20)	
	(GROSS) kg(lb)		11	(24)		11	(24)		11	(24)	
LAYERS LIMIT (actually)			11(12)			11(12)			11(12)		
Operation Condition		Cool (DBT)	-			-			-		
		Heat (DBT)	-			-			-		
PIPING	PIPE DIAMETER mm (inch)		(Liquid) ø6.35 (1/4) (Gas) ø12.7 (1/2)			(Liquid) ø6.35 (1/4) (Gas) ø12.7 (1/2)			(Liquid) ø6.35 (1/4) (Gas) ø12.7 (1/2)		
	CONNECT METHOD, STD LENGTH m (ft)		flared type			flared type			flared type		
	PIPE LENGTH RANGE m (ft)		-		(~)	-		(~)	-		(~)
	I/D & O/D HEIGHT DIFFERENCE m (ft)		-		-	-		-	-		-
	ADD GAS AMOUNT g/m (oz/ft)		-		-	-		-	-		-
	PIPE LENGTH FOR ADDITIONAL GAS m (ft)		-		-	-		-	-		-

*3: Network Impedance shall be applicable for EUROPE and CHINA models.
*4: The annual consumption is calculated by multiplying the input power at 230V(400V) by an average of 500 hours per year in cooling mode.
*5: EER and COP classification is at 230V(400V) only in accordance with EU directive 2002/31/EC.
* : In case it is necessary to indicate the air flow volume in (l/s), the value in (m^3/min.) shall be multiplied by 16.7 and rounded down the decimal point.
* : If the EUROVENT Certified models can be operated under the "extra-low" temperature condition, -7°C dry bulb and -8°C wet-bulb temperatures with rated voltage 230V shall be used.

5. Wall Mounted Type (K2 Type)

5-2. Major Component Specifications

Indoor unit (A)

MODEL No.			S-22MK2E5
Power source			220 - 230 - 240 V, Single-phase, 50/60 Hz
Controller P.C.B. Ass'y			A73C7568(CR-K075XH-P：Microprocessor)
Fan (Number...diameter)		mm	Cross-flow (1...ø102.8 / L611)
Fan motor			
	Model...Nominal output	W	NFD-37CVL-F229-7 … 30 W
	Power source		325 VDC
	No. of pole...r.p.m. (230V, High)	rpm	8P … 1,080
Electronic expansion valve			
	Coil		CAM-MD12MS
	Coil resistance (at 20°C)	Ω	WHT – RED : 46 ± 5% ORG – RED : 46 ± 5% YEL – RED : 46 ± 5% BLU – RED : 46 ± 5%
	Valve body		CAM-BD24MS-1
Heat exchanger			
	Coil		Aluminium plate fin / Copper tube
	Rows...fin pitch	mm	2...1.5
	Face area	m^2	0.192

4

5. Wall Mounted Type (K2 Type)

Indoor unit (B)

MODEL No.			S-28MK2E5
Power source			220 - 230 - 240 V, Single-phase, 50/60 Hz
Controller P.C.B. Ass'y			A73C7568(CR-K075XH-P：Microprocessor)
Fan (Number...diameter)		mm	Cross-flow (1...ø102.8 / L611)
Fan motor			
	Model...Nominal output	W	NFD-37CVL-F229-7 … 30 W
	Power source		325 VDC
	No. of pole...r.p.m. (230V, High)	rpm	8P … 1,120
Electronic expansion valve			
	Coil		CAM-MD12MS
	Coil resistance (at 20°C)	Ω	WHT – RED : 46 ± 5% ORG – RED : 46 ± 5% YEL – RED : 46 ± 5% BLU – RED : 46 ± 5%
	Valve body		CAM-BD24MS-1
Heat exchanger			
	Coil		Aluminium plate fin / Copper tube
	Rows...fin pitch	mm	2...1.2
	Face area	m^2	0.192

4

5. Wall Mounted Type (K2 Type)

Indoor unit (C)

MODEL No.			S-36MK2E5
Power source			220 - 230 - 240 V, Single-phase, 50/60 Hz
Controller P.C.B. Ass'y			A73C7568(CR-K075XH-P：Microprocessor)
Fan (Number...diameter)		mm	Cross-flow (1...ø102.8 / L611)
Fan motor			
	Model...Nominal output	W	NFD-37CVL-F229-7 … 30 W
	Power source		325 VDC
	No. of pole...r.p.m. (230V, High)	rpm	8P … 1,240
Electronic expansion valve			
	Coil		CAM-MD12MS
	Coil resistance (at 20°C)	Ω	WHT – RED : 46 ± 5% ORG – RED : 46 ± 5% YEL – RED : 46 ± 5% BLU – RED : 46 ± 5%
	Valve body		CAM-BD24MS-1
Heat exchanger			
	Coil		Aluminium plate fin / Copper tube
	Rows...fin pitch	mm	2...1.2
	Face area	m^2	0.192

4

5. Wall Mounted Type (K2 Type)

5-3. Dimensional Data

Indoor unit: S-22MK2E5 / 28MK2E5 / 36MK2E5

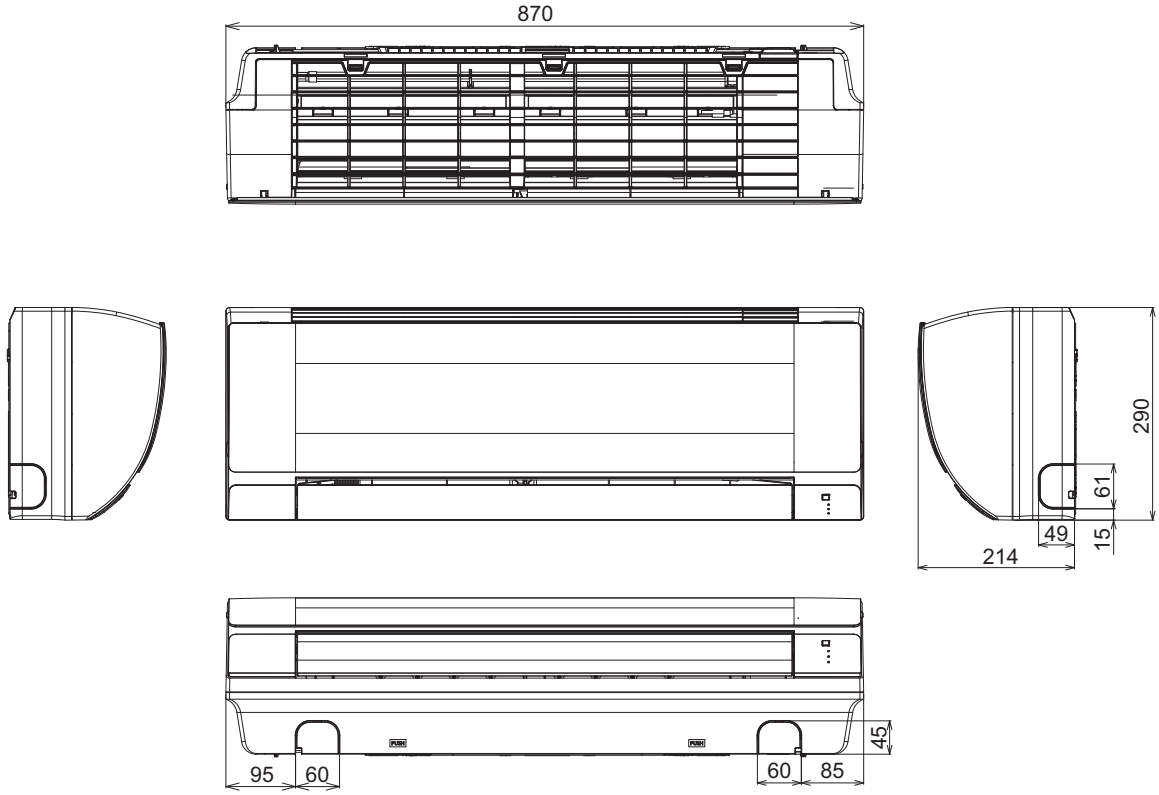

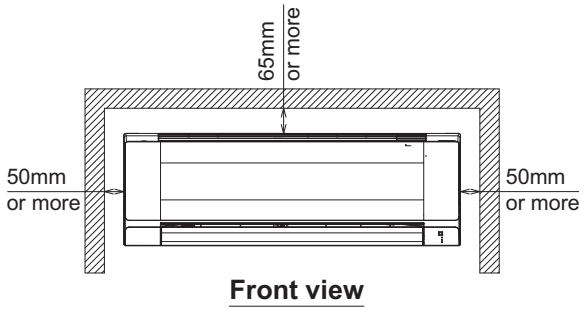

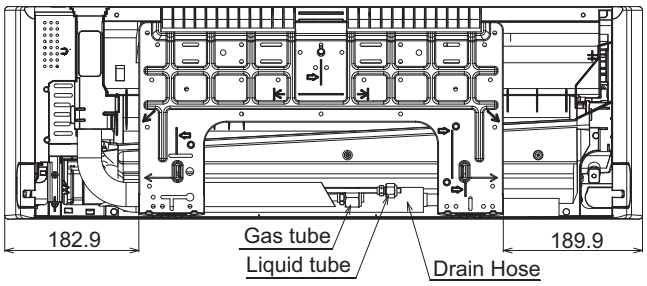

unit: mm

①	Refrigerant tubing (liquid tube) Ø6.35(flared)
②	Refrigerant tubing (gas tube) Ø12.7(flared)
③	Drain hose VP13 (outer dia. Ø18)
④	Rear panel (PL BACK)
⑤	Rear panel fixing holes (Ø5 holes or 5X13 oval holes)
⑥	Tubing and wiring holes (Ø65)

《FILTER SIZE》
(316 X 311 X 2) X 2 pcs.

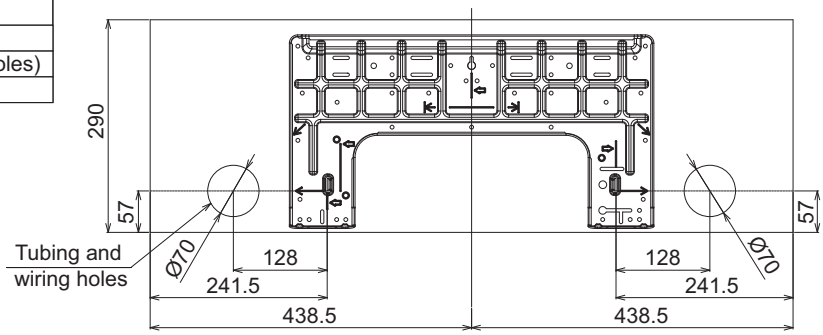

5. Wall Mounted Type (K2 Type)

5-4. Noise Criterion Curves

Both 50Hz and 60Hz

Hi
Me
Lo

MODEL	: S-22MK2E5	
SOUND LEVEL	: Hi	36 dB(A)
	Me	33 dB(A)
	Lo	29 dB(A)
CONDITION	: 1 m in front at height of 1 m	

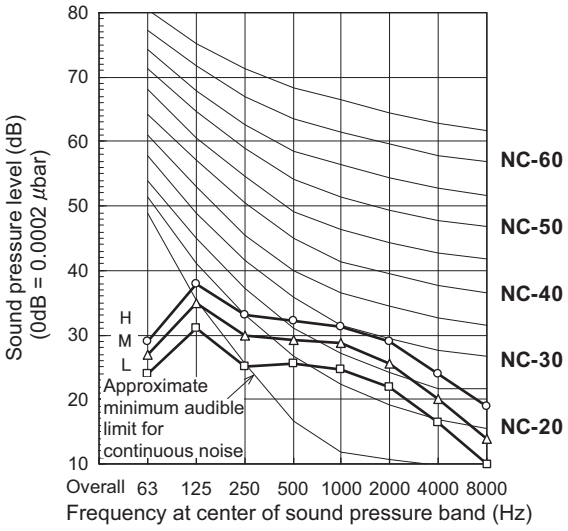

MODEL	: S-28MK2E5	
SOUND LEVEL	: Hi	37 dB(A)
	Me	34 dB(A)
	Lo	29 dB(A)
CONDITION	: 1 m in front at height of 1 m	

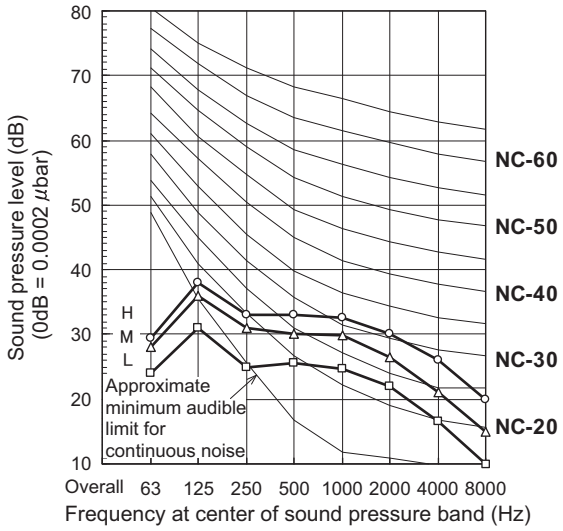

MODEL	: S-36MK2E5	
SOUND LEVEL	: Hi	40 dB(A)
	Me	36 dB(A)
	Lo	29 dB(A)
CONDITION	: 1 m in front at height of 1 m	

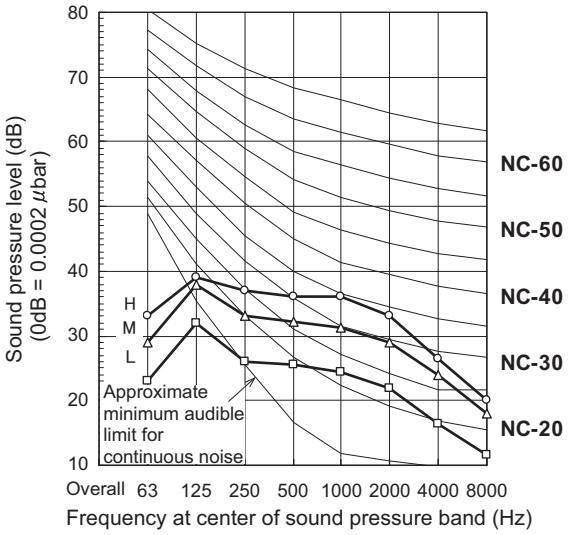

4

5. Wall Mounted Type (K2 Type)

5-5. Air Flow Distance / Temperature Chart

- **S-22MK2E5 / 28MK2E5**

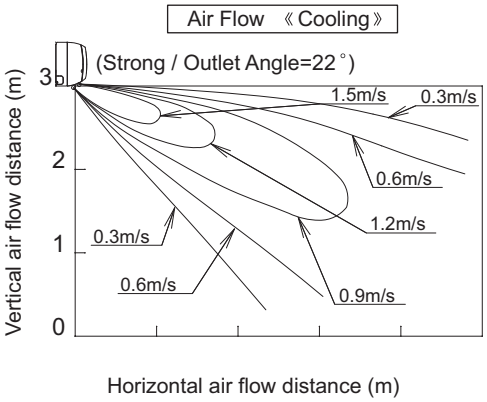

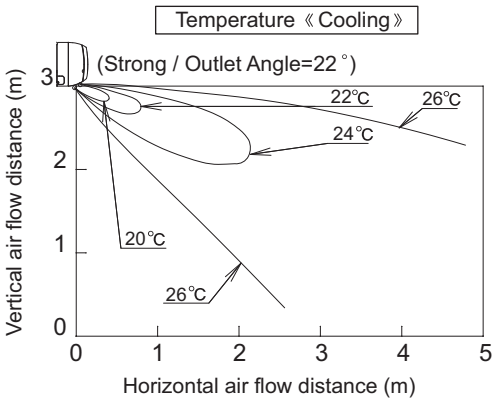

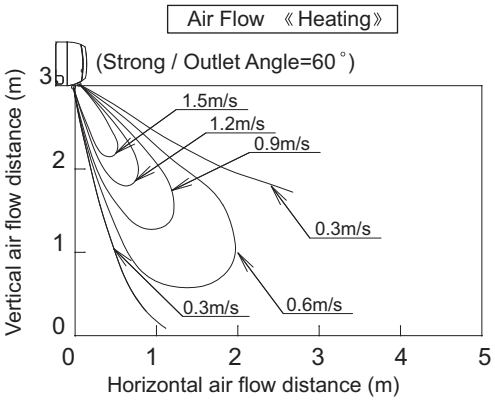

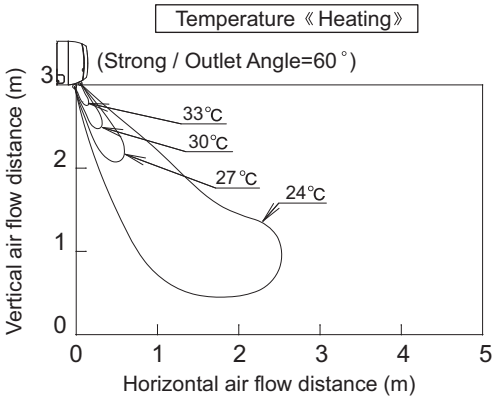

- **S-36MK2E5**

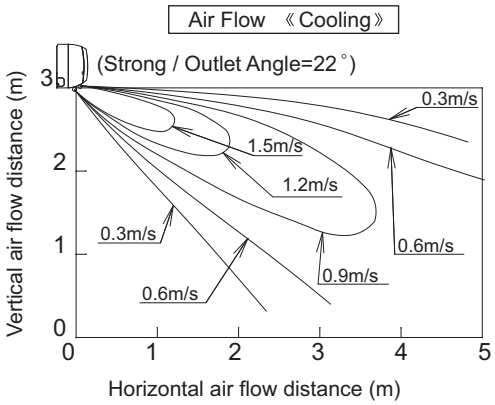

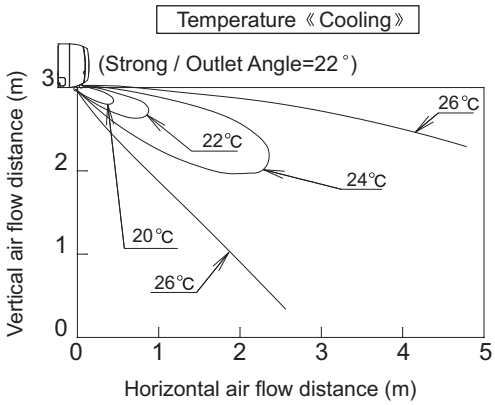

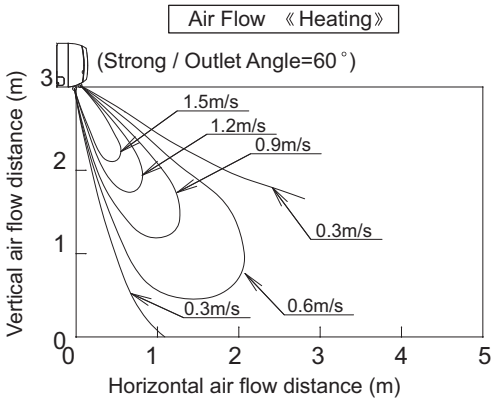

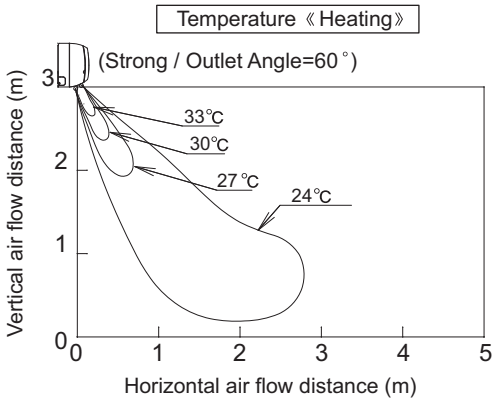

6. High Static Pressure Ducted Type (E1 Type)

6-1. Specifications

Unit specifications (A)

INDOOR		MODEL	S-224ME1E5A								
PANEL		MODEL	-								
PERFORMANCE TEST CONDITION			ISO5151 / EN14825								
POWER SUPPLY		ø, Hz	1ø 50Hz								
		V	220	230	240						
COOLING	CAPACITY	kW	22.4	22.4	22.4						
		BTU/h	76400	76400	76400						
		kcal/h(Fri./h)	-	-	-						
	CURRENT	A	5.91	5.98	6.00						
	INPUT POWER	W	1250	1310	1370						
	ANNUAL CONSUMPTION	W *4	-	-	-						
	EER/EER CLASS	(W/W)*5/("A"~"G")	-	-	-						
	EER	BTU/hW	-	-	-						
	POWER FACTOR	%	-	-	-						
	NOISE INDOOR (H/M/L)	dB-A	51/50/49								
		Power Level dB	62/61/60								
	NOISE OUTDOOR (H/L)	dB-A	-								
		Power Level dB	-								
HEATING	CAPACITY	kW	25.0	25.0	25.0						
		BTU/h	85300	85300	85300						
		kcal/h(Fri./h)	-	-	-						
	CURRENT	A	5.91	5.98	6.00						
	INPUT POWER	W	1250	1310	1370						
	COP/COP CLASS	(W/W)*5/("A"~"G")	-	-	-						
	COP	BTU/hW	-	-	-						
	POWER FACTOR	%	-	-	-						
	NOISE INDOOR (H/M/L)	dB-A	51/50/49								
		Power Level dB	62/61/60								
	NOISE OUTDOOR (H/L)	dB-A	-								
		Power Level dB	-								
EXTRA LOW TEMP	CAPACITY(kW)/INPUT POWER(W)/COP		-								
Cooling	MAX CURRENT(A)/MAX INPUT POWER(W)		7.00/1480	7.00/1530	7.00/1600						
Heating	MAX CURRENT(A)/MAX INPUT POWER(W)		7.00/1480	7.00/1530	7.00/1600						
STARTING CURRENT(A)/COMP OUTPUT(W)			-	-	-						
NETWORK IMPEDANCE (ΩMAX.) *3			-								
FM OUTPUT (ID/OD) W			400×2								
MOISTURE REMOVAL VOLUME		L/h(Pt/h)	12.5		(26.3)						
External static pressure		Pa	216 (MAX 235)								
I/D AIR FLOW	COOL	m^3/min (ft^3/min)	72 (2543)								
	HEAT	m^3/min (ft^3/min)	72 (2543)								
O/D AIR FLOW	COOL	m^3/min (ft^3/min)	-								
	HEAT	m^3/min (ft^3/min)	-								
REFRIGERANT TYPE, AMOUNT g(oz)			-								
PRO DIM	HEIGHT : H mm(inch)		479	(18-55/64)							
	WIDTH : W mm(inch)		1428	(56-7/32)							
	DEPTH : D mm(inch)		1230	(48-27/64)							
PAC DIM	HEIGHT : H mm		619 (24-3/8)								
	WIDTH : W mm		1536 (60-15/32)								
	DEPTH : D mm		1339 (52-23/32)								
MASS	(NET) kg(lb)		120	(265)							
	(GROSS) kg(lb)		144	(317)							
LAYERS LIMIT (actually)			4 (5)								
Operation Condition		Cool (DBT)	-								
		Heat (DBT)	-								
PIPING	PIPE DIAMETER mm (inch)		(Liquid) ø9.52 (3/8) (Gas) ø22.22 (7/8)								
	CONNECT METHOD, STD LENGTH m (ft)		(Liquid) flared type (Gas) brazing connection								
	PIPE LENGTH RANGE m (ft)		-								
	I/D & O/D HEIGHT DIFFERENCE m (ft)		-		-						
	ADD GAS AMOUNT g/m (oz/ft)		-		-						
	PIPE LENGTH FOR ADDITIONAL GAS m (ft)		-		-						

*3: Network Impedance shall be applicable for EUROPE and CHINA models.
*4: The annual consumption is calculated by multiplying the input power at 230V(400V) by an average of 500 hours per year in cooling mode.
*5: EER and COP classification is at 230V(400V) only in accordance with EU directive 2002/31/EC.
* : In case it is necessary to indicate the air flow volume in (l/s), the value in (m^3/min.) shall be multiplied by 16.7 and rounded down the decimal point.
* : If the EUROVENT Certified models can be operated under the "extra-low" temperature condition, -7°C dry bulb and -8°C wet-bulb temperatures with rated voltage 230V shall be used.

4

6. High Static Pressure Ducted Type (E1 Type)

6-2. Major Component Specifications

Indoor unit (D)

MODEL No.			S-224ME1E5A
Power source			220 - 230 - 240 V, single-phase, 50 Hz
Controller P.C.B. Ass'y			CR-UXRP71B-P (Microprocessor)
Fan (Number...diameter)		mm	Centrifugal (2...ø250)
Fan motor			
	Model...Nominal output	W	KFC4X-401B3P...400 W
	Power source		220 - 230 - 240 V / single-phase / 50 Hz
	No. of pole...r.p.m. (230V, High)	rpm	4P... 1,211
	Coil resistance (Ambient temperature 20°C)	Ω	BRN – WHT : 6.159 ORG – YEL : 0.87 WHT – VLT : 1.08 YEL – BLK : 2.87 VLT – ORG : 0.77 BLK – PNK : 5.98
	Safety device		
	Operating temperature	Open °C	130 ± 5
		Close °C	(115 ± 5)
	Run capacitor	VAC, μF	450 VAC, 5.0 μF
Electronic expansion valve			
	Coil		UKV-U023E
	Coil resistance (at 20°C)	Ω	ORG – GRY : 46 YEL – GRY : 46 RED – GRY : 46 BLK – GRY : 46
	Valve body		UKV-30D33
Heat exchanger			
	Coil		Aluminium plate fin / Copper tube
	Rows...fi n pitch	mm	3...2.0
	Face area	m^2	0.655

4

6. High Static Pressure Ducted Type (E1 Type)

6-3. Dimentional Data

Indoor unit: S-224ME1E5A

unit: mm

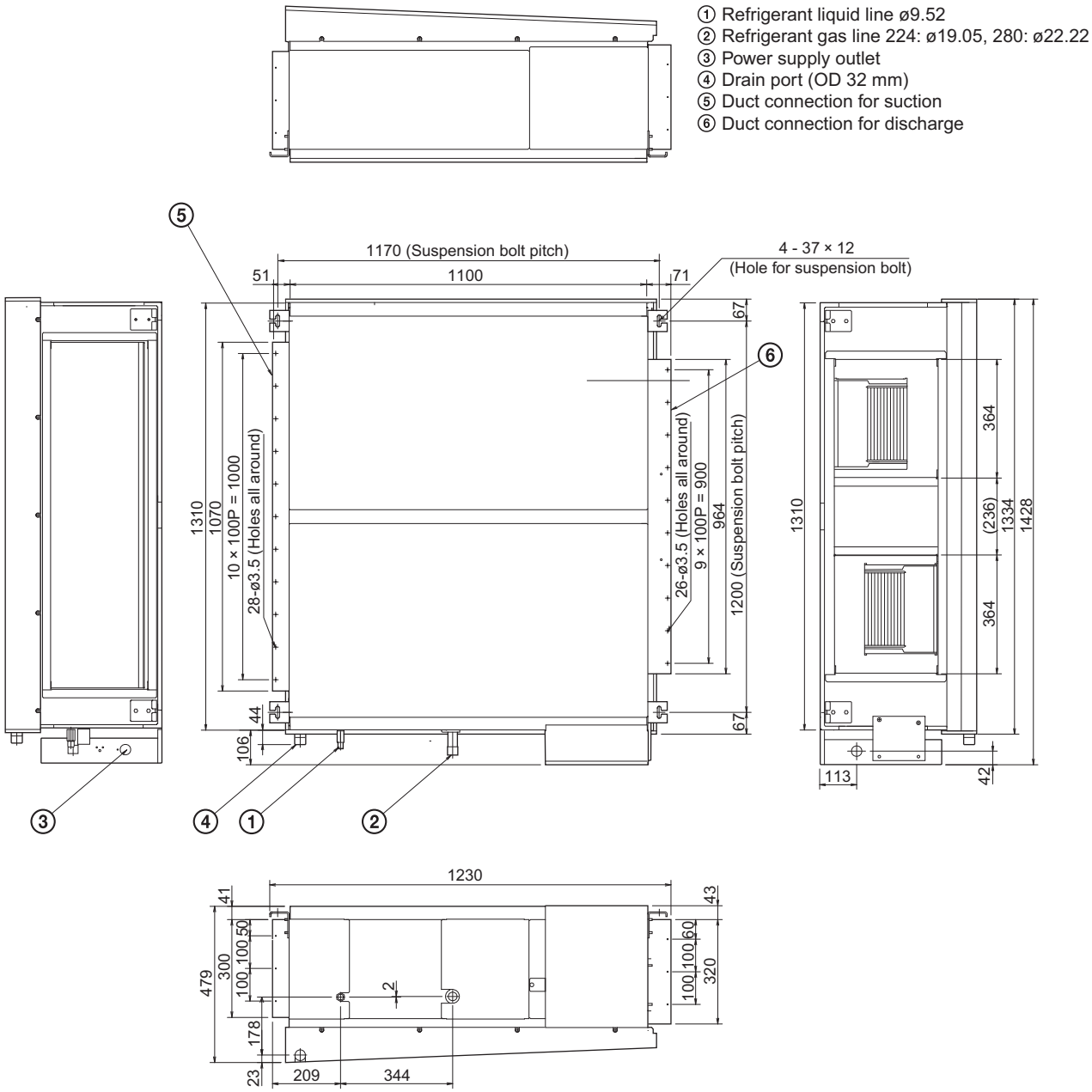

6. High Static Pressure Ducted Type (E1 Type)

6-4. Noise Criterion Curves

MODEL	: S-224ME1E5A
SOUND LEVEL	: HIGH 51dB(A)
CONDITION	: Under the unit 1.5 m
SOURCE	: 220-230-240V, 1Phase,50Hz

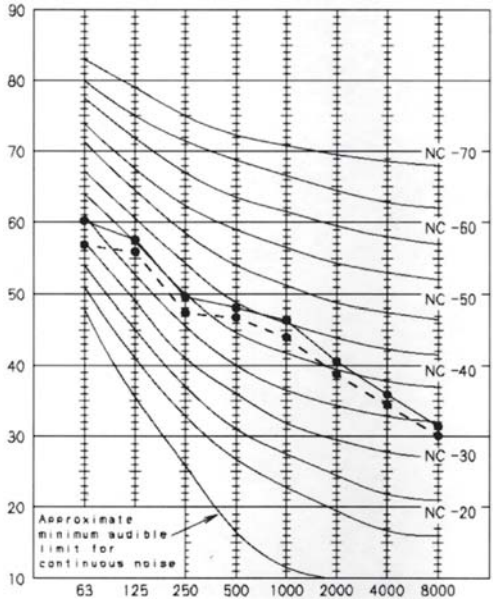

Frequency at center of sound pressure band (Hz)

4

REMARKS:
1. Value obtained in the actual place where the unit is installed may be slightly higher than the values shown in this graph because of the conditions of operation, the structure of the building, the background noise and other factors.
2. The test results were obtained from an anechoic room.

NOTE

To evaluate the noise level, the maximum value of the measured sound pressure level is used. Read the value at each frequency level (on horizontal axis, center of the sound pressure band) from 63 Hz to 8000 Hz, and select the corresponding maximum value indicated on the vertical axis.

6. High Static Pressure Ducted Type (E1 Type)

6-5. R.A.P. (Refrigerant Accumulation Protector) Valve Kit

■ Model: CZ-CAPE2 (Optional)

- **Connect 2 units in parallel for each indoor unit.**
- **Attach the R.A.P. valve kit within 30 meters from the indoor unit.**
- **Secure the R.A.P. valve kit using hanging bolts, etc.**
- **Be absolutely sure to install the R.A.P. valve kit top side up.**
- **Do not place the R.A.P. valve kit directly on the ceiling.**
- **The R.A.P. valve kit is required when a multiple number of type 224 or 280 units are to be connected to the same system.**
- **The R.A.P. valve kit is required when a type 224 or 280 indoor unit is to be connected among other indoor units.**

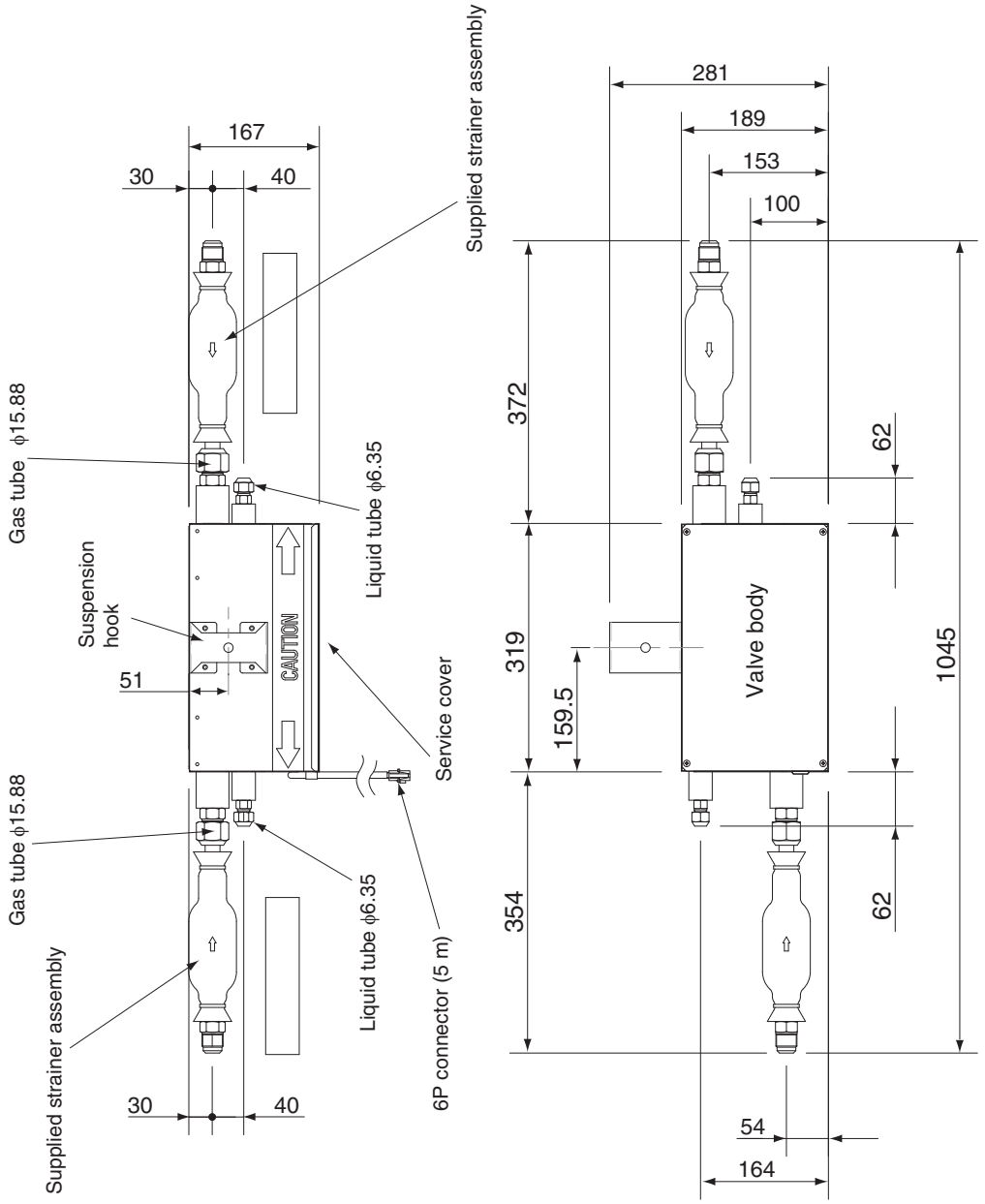

unit: mm

6. High Static Pressure Ducted Type (E1 Type)

6-6. Indoor Fan Performance

Increasing the Fan Speed

If external static pressure is too great (due to long extension of ducts, for example), the air flow volume may drop too low at each air outlet. This problem may be solved by increasing the fan speed using the following procedure:

(1) Remove 4 screws on the electrical component box and remove the cover plate.

(2) Disconnect the fan motor sockets in the box.

(3) Take out 2 booster cables from option curton box (sockets at both ends).

(4) Securely connect 2 booster cable's sockets between the disconnected fan motor sockets in step 2 as shown in the Fig. 8-1.

(5) Place the cable neatly in the box and reinstall the cover plate.

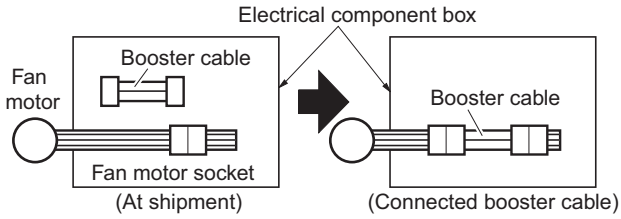

Fig. 8-1

Indoor Fan Performance

S-224ME1E5A

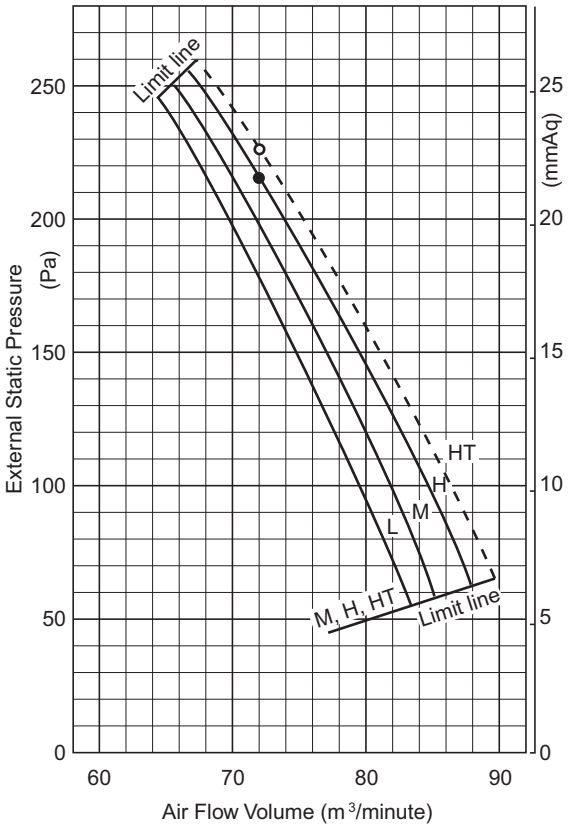

NOTE HT : Using the booster cable

H : At shipment

Fig. 8-2

7. 4-Way Cassette Type (U1 Type)

7-1. Specifications

Unit specifications (A)

MODEL No.	Indoor Unit		S-22MU1E5					
POWER SOURCE			220 - 230 - 240 V, single-phase, 50/60 Hz					
PERFORMANCE			Cooling			Heating		
Capacity		kW	2.2			2.5		
		BTU / h	7,500			8,500		
Air circulation (Hi / Me / Lo)		m^3 / h	780 / 720 / 660					
Moisture removal (High)		Liters / h	0.1			–		
ELECTRICAL RATINGS								
Voltage rating		V	220	230	240	220	230	240
Available voltage range		V	198 - 264			198 - 264		
Running amperes		A	0.25	0.26	0.26	0.18	0.18	0.17
Power input		W	30	31	34	19	19	21
Power factor		%	54	53	56	48	47	50
Max. starting amperes		A	–	–	–	–	–	–
FEATURES								
Controls			Microprocessor					
Timer			ON / OFF Timer (Max. 72 h)					
Fan speeds			3 and Automatic control					
Air filter			Washable, easy access, long life (2,500 h)					
Refrigerant control			Electronic expansion valve					
Operation sound (Hi / Me / Lo)		dB-A	29 / 28 / 27					
Refrigerant tubing connections			Flare type					
Refrigerant tube diameter	Liquid tube	mm (in.)	6.35 (1 / 4)					
	Gas tube	mm (in.)	12.7 (1 / 2)					
Drain connection			25 A, OD32 mm					
Drain pump			Max. head 670 mm above drain connection					
Panel			Optional (CZ-KPU2)					
Remote controller			Optional (Wired / Wireless)					
Refrigerant tubing kit / Accessories			Optional / –					
Color (Approximate value)			Munsell 2.5GY 9.0 / 0.5, RAL 9001-GL (resemblant color)					
DIMENSIONS & WEIGHT			Indoor unit (including panel)			Package		
						Body	Panel	
Unit dimensions	Height	mm (in.)	290 (11-27 / 64)			294 (11-37 / 64)	94 (3-45 / 64)	
	Width	mm (in.)	950 (37-13 / 32)			904 (35-19 / 32)	1001 (39-13 / 32)	
	Depth	mm (in.)	950 (37-13 / 32)			886 (34-7 / 8)	981 (38-5 / 8)	
Net weight		kg (lbs.)	24 (53)			–	–	
Shipping weight		kg (lbs.)	–			23 (51)	6 (13)	
Shipping volume		m^3 (cu.ft)	–			0.235 (8.3)	0.092 (3.3)	

DATA SUBJECT TO CHANGE WITHOUT NOTICE.

Rated conditions
Cooling: Indoor air temperature 27°C DB / 19°C WB; Outdoor air temperature 35°C DB
Heating: Indoor air temperature 20°C DB; Outdoor air temperature 7°C DB / 6°C WB

7. 4-Way Cassette Type (U1 Type)

Unit specifications (B)

MODEL No.	Indoor Unit		S-28MU1E5					
POWER SOURCE			220 - 230 - 240 V, single-phase, 50/60 Hz					
PERFORMANCE			Cooling			Heating		
Capacity		kW	2.8			3.2		
		BTU / h	9,600			11,000		
Air circulation (Hi / Me / Lo)		m^3 / h	780 / 720 / 660					
Moisture removal (High)		Liters / h	0.2			–		
ELECTRICAL RATINGS								
Voltage rating		V	220	230	240	220	230	240
Available voltage range		V	198 - 264			198 - 264		
Running amperes		A	0.25	0.26	0.26	0.18	0.18	0.17
Power input		W	30	31	34	19	19	21
Power factor		%	54	53	56	48	47	50
Max. starting amperes		A	–	–	–	–	–	–
FEATURES								
Controls			Microprocessor					
Timer			ON / OFF Timer (Max. 72 h)					
Fan speeds			3 and Automatic control					
Air filter			Washable, easy access, long life (2,500 h)					
Refrigerant control			Electronic expansion valve					
Operation sound (Hi / Me / Lo)		dB-A	29 / 28 / 27					
Refrigerant tubing connections			Flare type					
Refrigerant tube diameter	Liquid tube	mm (in.)	6.35 (1 / 4)					
	Gas tube	mm (in.)	12.7 (1 / 2)					
Drain connection			25 A, OD32 mm					
Drain pump			Max. head 670 mm above drain connection					
Panel			Optional (CZ-KPU2)					
Remote controller			Optional (Wired / Wireless)					
Refrigerant tubing kit / Accessories			Optional / –					
Color (Approximate value)			Munsell 2.5GY 9.0 / 0.5, RAL 9001-GL (resemblant color)					
DIMENSIONS & WEIGHT			Indoor unit (including panel)			Package		
						Body	Panel	
Unit dimensions	Height	mm (in.)	290 (11-27 / 64)			294 (11-37 / 64)	94 (3-45 / 64)	
	Width	mm (in.)	950 (37-13 / 32)			904 (35-19 / 32)	1001 (39-13 / 32)	
	Depth	mm (in.)	950 (37-13 / 32)			886 (34-7 / 8)	981 (38-5 / 8)	
Net weight		kg (lbs.)	24 (53)			–	–	
Shipping weight		kg (lbs.)	–			23 (51)	6 (13)	
Shipping volume		m^3 (cu.ft)	–			0.235 (8.3)	0.092 (3.3)	

DATA SUBJECT TO CHANGE WITHOUT NOTICE.

Rated conditions
Cooling: Indoor air temperature 27°C DB / 19°C WB; Outdoor air temperature 35°C DB
Heating: Indoor air temperature 20°C DB; Outdoor air temperature 7°C DB / 6°C WB

7. 4-Way Cassette Type (U1 Type)

Unit specifications (C)

MODEL No.	Indoor Unit		S-36MU1E5					
POWER SOURCE			220 - 230 - 240 V, single-phase, 50/60 Hz					
PERFORMANCE			Cooling			Heating		
Capacity		kW	3.6			4.2		
		BTU / h	12,000			14,000		
Air circulation (Hi / Me / Lo)		m^3 / h	780 / 720 / 660					
Moisture removal (High)		Liters / h	0.9			–		
ELECTRICAL RATINGS								
Voltage rating		V	220	230	240	220	230	240
Available voltage range		V	198 - 264			198 - 264		
Running amperes		A	0.25	0.26	0.26	0.18	0.18	0.17
Power input		W	30	31	34	19	19	21
Power factor		%	54	53	56	48	47	50
Max. starting amperes		A	–	–	–	–	–	–
FEATURES								
Controls			Microprocessor					
Timer			ON / OFF Timer (Max. 72 h)					
Fan speeds			3 and Automatic control					
Air filter			Washable, easy access, long life (2,500 h)					
Refrigerant control			Electronic expansion valve					
Operation sound (Hi / Me / Lo)		dB-A	29 / 28 / 27					
Refrigerant tubing connections			Flare type					
Refrigerant tube diameter	Liquid tube	mm (in.)	6.35 (1 / 4)					
	Gas tube	mm (in.)	12.7 (1 / 2)					
Drain connection			25 A, OD32 mm					
Drain pump			Max. head 670 mm above drain connection					
Panel			Optional (CZ-KPU2)					
Remote controller			Optional (Wired / Wireless)					
Refrigerant tubing kit / Accessories			Optional / –					
Color (Approximate value)			Munsell 2.5GY 9.0 / 0.5, RAL 9001-GL (resemblant color)					
DIMENSIONS & WEIGHT			Indoor unit (including panel)			Package		
						Body	Panel	
Unit dimensions	Height	mm (in.)	290 (11-27 / 64)			294 (11-37 / 64)	94 (3-45 / 64)	
	Width	mm (in.)	950 (37-13 / 32)			904 (35-19 / 32)	1001 (39-13 / 32)	
	Depth	mm (in.)	950 (37-13 / 32)			886 (34-7 / 8)	981 (38-5 / 8)	
Net weight		kg (lbs.)	24 (53)			–	–	
Shipping weight		kg (lbs.)	–			23 (51)	6 (13)	
Shipping volume		m^3 (cu.ft)	–			0.235 (8.3)	0.092 (3.3)	

DATA SUBJECT TO CHANGE WITHOUT NOTICE.

Rated conditions
Cooling: Indoor air temperature 27°C DB / 19°C WB; Outdoor air temperature 35°C DB
Heating: Indoor air temperature 20°C DB; Outdoor air temperature 7°C DB / 6°C WB

7. 4-Way Cassette Type (U1 Type)

Unit specifications (D)

MODEL No.	Indoor Unit		S-45MU1E5					
POWER SOURCE			220 - 230 - 240 V, single-phase, 50/60 Hz					
PERFORMANCE			Cooling			Heating		
Capacity		kW	4.5			5.0		
		BTU / h	15,000			17,000		
Air circulation (Hi / Me / Lo)		m^3 / h	900 / 840 / 780					
Moisture removal (High)		Liters / h	1.3			–		
ELECTRICAL RATINGS								
Voltage rating		V	220	230	240	220	230	240
Available voltage range		V	198 - 264			198 - 264		
Running amperes		A	0.29	0.29	0.29	0.21	0.21	0.21
Power input		W	33	35	38	22	23	24
Power factor		%	53	53	54	48	48	49
Max. starting amperes		A	–	–	–	–	–	–
FEATURES								
Controls			Microprocessor					
Timer			ON / OFF Timer (Max. 72 h)					
Fan speeds			3 and Automatic control					
Air filter			Washable, easy access, long life (2,500 h)					
Refrigerant control			Electronic expansion valve					
Operation sound (Hi / Me / Lo)		dB-A	30 / 28 / 27					
Refrigerant tubing connections			Flare type					
Refrigerant tube diameter	Liquid tube	mm (in.)	6.35 (1 / 4)					
	Gas tube	mm (in.)	12.7 (1 / 2)					
Drain connection			25 A, OD32 mm					
Drain pump			Max. head 670 mm above drain connection					
Panel			Optional (CZ-KPU2)					
Remote controller			Optional (Wired / Wireless)					
Refrigerant tubing kit / Accessories			Optional / –					
Color (Approximate value)			Munsell 2.5GY 9.0 / 0.5, RAL 9001-GL (resemblant color)					
DIMENSIONS & WEIGHT			Indoor unit (including panel)			Package		
						Body	Panel	
Unit dimensions	Height	mm (in.)	290 (11-27 / 64)			294 (11-37 / 64)	94 (3-45 / 64)	
	Width	mm (in.)	950 (37-13 / 32)			904 (35-19 / 32)	1001 (39-13 / 32)	
	Depth	mm (in.)	950 (37-13 / 32)			886 (34-7 / 8)	981 (38-5 / 8)	
Net weight		kg (lbs.)	24 (53)			–	–	
Shipping weight		kg (lbs.)	–			23 (51)	6 (13)	
Shipping volume		m^3 (cu.ft)	–			0.235 (8.3)	0.092 (3.3)	

DATA SUBJECT TO CHANGE WITHOUT NOTICE.

Rated conditions
Cooling: Indoor air temperature 27°C DB / 19°C WB; Outdoor air temperature 35°C DB
Heating: Indoor air temperature 20°C DB; Outdoor air temperature 7°C DB / 6°C WB

7. 4-Way Cassette Type (U1 Type)

Unit specifications (E)

MODEL No.	Indoor Unit		S-56MU1E5					
POWER SOURCE			220 - 230 - 240 V, single-phase, 50/60 Hz					
PERFORMANCE			Cooling			Heating		
Capacity		kW	5.6			6.3		
		BTU / h	19,000			21,000		
Air circulation (Hi / Me / Lo)		m^3 / h	1020 / 900 / 780					
Moisture removal (High)		Liters / h	2.0			–		
ELECTRICAL RATINGS								
Voltage rating		V	220	230	240	220	230	240
Available voltage range		V	198 - 264			198 - 264		
Running amperes		A	0.34	0.34	0.34	0.28	0.28	0.27
Power input		W	39	41	44	30	31	31
Power factor		%	53	53	53	48	49	49
Max. starting amperes		A	–	–	–	–	–	–
FEATURES								
Controls			Microprocessor					
Timer			ON / OFF Timer (Max. 72 h)					
Fan speeds			3 and Automatic control					
Air filter			Washable, easy access, long life (2,500 h)					
Refrigerant control			Electronic expansion valve					
Operation sound (Hi / Me / Lo)		dB-A	32 / 29 / 27					
Refrigerant tubing connections			Flare type					
Refrigerant tube diameter	Liquid tube	mm (in.)	6.35 (1 / 4)					
	Gas tube	mm (in.)	12.7 (1 / 2)					
Drain connection			25 A, OD32 mm					
Drain pump			Max. head 670 mm above drain connection					
Panel			Optional (CZ-KPU2)					
Remote controller			Optional (Wired / Wireless)					
Refrigerant tubing kit / Accessories			Optional / –					
Color (Approximate value)			Munsell 2.5GY 9.0 / 0.5, RAL 9001-GL (resemblant color)					
DIMENSIONS & WEIGHT			Indoor unit (including panel)			Package		
						Body	Panel	
Unit dimensions	Height	mm (in.)	290 (11-27 / 64)			294 (11-37 / 64)	94 (3-45 / 64)	
	Width	mm (in.)	950 (37-13 / 32)			904 (35-19 / 32)	1001 (39-13 / 32)	
	Depth	mm (in.)	950 (37-13 / 32)			886 (34-7 / 8)	981 (38-5 / 8)	
Net weight		kg (lbs.)	24 (53)			–	–	
Shipping weight		kg (lbs.)	–			23 (51)	6 (13)	
Shipping volume		m^3 (cu.ft)	–			0.235 (8.3)	0.092 (3.3)	

DATA SUBJECT TO CHANGE WITHOUT NOTICE.

Rated conditions
Cooling: Indoor air temperature 27°C DB / 19°C WB; Outdoor air temperature 35°C DB
Heating: Indoor air temperature 20°C DB; Outdoor air temperature 7°C DB / 6°C WB

7. 4-Way Cassette Type (U1 Type)

Unit specifications (F)

MODEL No.	Indoor Unit		S-73MU1E5					
POWER SOURCE			220 - 230 - 240 V, single-phase, 50/60 Hz					
PERFORMANCE			Cooling			Heating		
Capacity		kW	7.3			8.0		
		BTU / h	25,000			27,000		
Air circulation (Hi / Me / Lo)		m^3 / h	1260 / 1020 / 840					
Moisture removal (High)		Liters / h	2.6			–		
ELECTRICAL RATINGS								
Voltage rating		V	220	230	240	220	230	240
Available voltage range		V	198 - 264			198 - 264		
Running amperes		A	0.46	0.46	0.45	0.41	0.40	0.39
Power input		W	53	54	57	44	44	46
Power factor		%	52	52	53	49	49	50
Max. starting amperes		A	–	–	–	–	–	–
FEATURES								
Controls			Microprocessor					
Timer			ON / OFF Timer (Max. 72 h)					
Fan speeds			3 and Automatic control					
Air filter			Washable, easy access, long life (2,500 h)					
Refrigerant control			Electronic expansion valve					
Operation sound (Hi / Me / Lo)		dB-A	35 / 31 / 28					
Refrigerant tubing connections			Flare type					
Refrigerant tube diameter	Liquid tube	mm (in.)	9.52 (3 / 8)					
	Gas tube	mm (in.)	15.88 (5 / 8)					
Drain connection			25 A, OD32 mm					
Drain pump			Max. head 670 mm above drain connection					
Panel			Optional (CZ-KPU2)					
Remote controller			Optional (Wired / Wireless)					
Refrigerant tubing kit / Accessories			Optional / –					
Color (Approximate value)			Munsell 2.5GY 9.0 / 0.5, RAL 9001-GL (resemblant color)					
DIMENSIONS & WEIGHT			Indoor unit (including panel)			Package		
						Body	Panel	
Unit dimensions	Height	mm (in.)	290 (11-27 / 64)			294 (11-37 / 64)	94 (3-45 / 64)	
	Width	mm (in.)	950 (37-13 / 32)			904 (35-19 / 32)	1001 (39-13 / 32)	
	Depth	mm (in.)	950 (37-13 / 32)			886 (34-7 / 8)	981 (38-5 / 8)	
Net weight		kg (lbs.)	25 (55)			–	–	
Shipping weight		kg (lbs.)	–			24 (53)	6 (13)	
Shipping volume		m^3 (cu.ft)	–			0.235 (8.3)	0.092 (3.3)	

DATA SUBJECT TO CHANGE WITHOUT NOTICE.

Rated conditions
Cooling: Indoor air temperature 27°C DB / 19°C WB; Outdoor air temperature 35°C DB
Heating: Indoor air temperature 20°C DB; Outdoor air temperature 7°C DB / 6°C WB

7. 4-Way Cassette Type (U1 Type)

Unit specifications (G)

MODEL No.	Indoor Unit		S-106MU1E5					
POWER SOURCE			220 - 230 - 240 V, single-phase, 50/60 Hz					
PERFORMANCE			Cooling			Heating		
Capacity		kW	10.6			11.4		
		BTU / h	36,000			39,000		
Air circulation (Hi / Me / Lo)		m^3 / h	1980 / 1620 / 1260					
Moisture removal (High)		Liters / h	3.8			–		
ELECTRICAL RATINGS								
Voltage rating		V	220	230	240	220	230	240
Available voltage range		V	198 - 264			198 - 264		
Running amperes		A	0.84	0.82	0.82	0.80	0.77	0.76
Power input		W	100	102	106	93	94	96
Power factor		%	54	54	54	53	53	53
Max. starting amperes		A	–	–	–	–	–	–
FEATURES								
Controls			Microprocessor					
Timer			ON / OFF Timer (Max. 72 h)					
Fan speeds			3 and Automatic control					
Air filter			Washable, easy access, long life (2,500 h)					
Refrigerant control			Electronic expansion valve					
Operation sound (Hi / Me / Lo)		dB-A	43 / 38 / 32					
Refrigerant tubing connections			Flare type					
Refrigerant tube diameter	Liquid tube	mm (in.)	9.52 (3 / 8)					
	Gas tube	mm (in.)	15.88 (5 / 8)					
Drain connection			25 A, OD32 mm					
Drain pump			Max. head 670 mm above drain connection					
Panel			Optional (CZ-KPU2)					
Remote controller			Optional (Wired / Wireless)					
Refrigerant tubing kit / Accessories			Optional / –					
Color (Approximate value)			Munsell 2.5GY 9.0 / 0.5, RAL 9001-GL (resemblant color)					
DIMENSIONS & WEIGHT			Indoor unit (including panel)			Package		
						Body	Panel	
Unit dimensions	Height	mm (in.)	353 (13-57 / 64)			357 (14-1 / 16)	94 (3-45 / 64)	
	Width	mm (in.)	950 (37-13 / 32)			904 (35-19 / 32)	1001 (39-13 / 32)	
	Depth	mm (in.)	950 (37-13 / 32)			886 (34-7 / 8)	981 (38-5 / 8)	
Net weight		kg (lbs.)	29 (64)			–	–	
Shipping weight		kg (lbs.)	–			28 (62)	6 (13)	
Shipping volume		m^3 (cu.ft)	–			0.286 (10.1)	0.092 (3.3)	

DATA SUBJECT TO CHANGE WITHOUT NOTICE.

Rated conditions
Cooling: Indoor air temperature 27°C DB / 19°C WB; Outdoor air temperature 35°C DB
Heating: Indoor air temperature 20°C DB; Outdoor air temperature 7°C DB / 6°C WB

7. 4-Way Cassette Type (U1 Type)

Unit specifications (H)

MODEL No.	Indoor Unit		S-140MU1E5					
POWER SOURCE			220 - 230 - 240 V, single-phase, 50/60 Hz					
PERFORMANCE			Cooling			Heating		
Capacity		kW	14.0			16.0		
		BTU / h	47,800			54,600		
Air circulation (Hi / Me / Lo)		m^3 / h	2100 / 1680 / 1320					
Moisture removal (High)		Liters / h	6.4			–		
ELECTRICAL RATINGS								
Voltage rating		V	220	230	240	220	230	240
Available voltage range		V	198 - 264			198 - 264		
Running amperes		A	0.90	0.88	0.88	0.86	0.83	0.83
Power input		W	109	110	114	102	102	105
Power factor		%	55	54	54	54	53	53
Max. starting amperes		A	–	–	–	–	–	–
FEATURES								
Controls			Microprocessor					
Timer			ON / OFF Timer (Max. 72 h)					
Fan speeds			3 and Automatic control					
Air filter			Washable, easy access, long life (2,500 h)					
Refrigerant control			Electronic expansion valve					
Operation sound (Hi / Me / Lo)		dB-A	44 / 39 / 33					
Refrigerant tubing connections			Flare type					
Refrigerant tube diameter	Liquid tube	mm (in.)	9.52 (3 / 8)					
	Gas tube	mm (in.)	15.88 (5 / 8)					
Drain connection			25 A, OD32 mm					
Drain pump			Max. head 670 mm above drain connection					
Panel			Optional (CZ-KPU2)					
Remote controller			Optional (Wired / Wireless)					
Refrigerant tubing kit / Accessories			Optional / –					
Color (Approximate value)			Munsell 2.5GY 9.0 / 0.5, RAL 9001-GL (resemblant color)					
DIMENSIONS & WEIGHT			Indoor unit (including panel)			Package		
						Body	Panel	
Unit dimensions	Height	mm (in.)	353 (13-57 / 64)			357 (14-1 / 16)	94 (3-45 / 64)	
	Width	mm (in.)	950 (37-13 / 32)			904 (35-19 / 32)	1001 (39-13 / 32)	
	Depth	mm (in.)	950 (37-13 / 32)			886 (34-7 / 8)	981 (38-5 / 8)	
Net weight		kg (lbs.)	29 (64)			–	–	
Shipping weight		kg (lbs.)	–			28 (62)	6 (13)	
Shipping volume		m^3 (cu.ft)	–			0.286 (10.1)	0.092 (3.3)	

DATA SUBJECT TO CHANGE WITHOUT NOTICE.

Rated conditions
Cooling: Indoor air temperature 27°C DB / 19°C WB; Outdoor air temperature 35°C DB
Heating: Indoor air temperature 20°C DB; Outdoor air temperature 7°C DB / 6°C WB

7. 4-Way Cassette Type (U1 Type)

Unit specifications (I)

MODEL No.	Indoor Unit		S-160MU1E5					
POWER SOURCE			220 - 230 - 240 V, single-phase, 50/60 Hz					
PERFORMANCE			Cooling			Heating		
Capacity		kW	16.0			18.0		
		BTU / h	54,600			61,400		
Air circulation (Hi / Me / Lo)		m^3 / h	2160 / 1740 / 1380					
Moisture removal (High)		Liters / h	7.6			–		
ELECTRICAL RATINGS								
Voltage rating		V	220	230	240	220	230	240
Available voltage range		V	198 - 264			198 - 264		
Running amperes		A	0.97	0.94	0.94	0.89	0.86	0.86
Power input		W	117	119	124	106	107	110
Power factor		%	55	55	55	54	54	53
Max. starting amperes		A	–	–	–	–	–	–
FEATURES								
Controls			Microprocessor					
Timer			ON / OFF Timer (Max. 72 h)					
Fan speeds			3 and Automatic control					
Air filter			Washable, easy access, long life (2,500 h)					
Refrigerant control			Electronic expansion valve					
Operation sound (Hi / Me / Lo)		dB-A	45 / 40 / 34					
Refrigerant tubing connections			Flare type					
Refrigerant tube diameter	Liquid tube	mm (in.)	9.52 (3 / 8)					
	Gas tube	mm (in.)	15.88 (5 / 8)					
Drain connection			25 A, OD32 mm					
Drain pump			Max. head 670 mm above drain connection					
Panel			Optional (CZ-KPU2)					
Remote controller			Optional (Wired / Wireless)					
Refrigerant tubing kit / Accessories			Optional / –					
Color (Approximate value)			Munsell 2.5GY 9.0 / 0.5, RAL 9001-GL (resemblant color)					
DIMENSIONS & WEIGHT			Indoor unit (including panel)			Package		
						Body	Panel	
Unit dimensions	Height	mm (in.)	353 (13-57 / 64)			357 (14-1 / 16)	94 (3-45 / 64)	
	Width	mm (in.)	950 (37-13 / 32)			904 (35-19 / 32)	1001 (39-13 / 32)	
	Depth	mm (in.)	950 (37-13 / 32)			886 (34-7 / 8)	981 (38-5 / 8)	
Net weight		kg (lbs.)	29 (64)			–	–	
Shipping weight		kg (lbs.)	–			28 (62)	6 (13)	
Shipping volume		m^3 (cu.ft)	–			0.286 (10.1)	0.092 (3.3)	

DATA SUBJECT TO CHANGE WITHOUT NOTICE.

Rated conditions
Cooling: Indoor air temperature 27°C DB / 19°C WB; Outdoor air temperature 35°C DB
Heating: Indoor air temperature 20°C DB; Outdoor air temperature 7°C DB / 6°C WB

7. 4-Way Cassette Type (U1 Type)

7-2. Major Component Specifications

Indoor unit (A)

MODEL No.			S-22MU1E5
Power source			220 - 230 - 240 V, single-phase, 50/60 Hz
Controller P.C.B. Ass'y			CR-SX80EQ (Microprocessor)
Fan (Number...diameter)		mm	Turbo (1...ø490)
Fan motor			
	Model...Nominal output	W	DK8-53D280H...50 W
	Power source		280 VDC
	No. of pole...r.p.m. (230V, High)	rpm	8P...310
	Run capacitor	VAC, μF	–
Safety device			overcurrent, rotating signal detection, fuse
Electronic expansion valve			
	Coil		UKV-A152
	Coil resistance (at 20°C)	Ω	ORG – GRY : 46 YEL – GRY : 46 RED – GRY : 46 BLK – GRY : 46
	Valve body		UKV-18D31
Heat exchanger			
	Coil		Aluminium plate fin / Copper tube
	Rows...fin pitch	mm	2...1.25
	Face area	m^2	0.350
Panel			
	Model No.		CZ-KPU2
	Auto louver motor		MP24ZN-12V
	Coil resistance (at 25°C)	Ω	380 Ω ± 7% / phase
Drain pump			PLD-12230ST-4
	Rated	V, W	AC 230 V, 50 Hz, 12 W
	Total head & capacity		670 mm, 400 cc/min

4

7. 4-Way Cassette Type (U1 Type)

Indoor unit (B)

MODEL No.			**S-28MU1E5**
Power source			220 - 230 - 240 V, single-phase, 50/60 Hz
Controller P.C.B. Ass'y			CR-SX80EQ (Microprocessor)
Fan (Number...diameter)		mm	Turbo (1...ø490)
Fan motor			
	Model...Nominal output	W	DK8-53D280H...50 W
	Power source		280 VDC
	No. of pole...r.p.m. (230V, High)	rpm	8P...310
	Run capacitor	VAC, μF	–
Safety device			overcurrent, rotating signal detection, fuse
Electronic expansion valve			
	Coil		UKV-A152
	Coil resistance (at 20°C)	Ω	ORG – GRY : 46 YEL – GRY : 46 RED – GRY : 46 BLK – GRY : 46
	Valve body		UKV-18D31
Heat exchanger			
	Coil		Aluminium plate fin / Copper tube
	Rows...fin pitch	mm	2...1.25
	Face area	m^2	0.350
Panel			
	Model No.		CZ-KPU2
	Auto louver motor		MP24ZN-12V
	Coil resistance (at 25°C)	Ω	380 Ω ± 7% / phase
Drain pump			PLD-12230ST-4
	Rated	V, W	AC 230 V, 50 Hz, 12 W
	Total head & capacity		670 mm, 400 cc/min

7. 4-Way Cassette Type (U1 Type)

Indoor unit (C)

MODEL No.			**S-36MU1E5**
Power source			220 - 230 - 240 V, single-phase, 50/60 Hz
Controller P.C.B. Ass'y			CR-SX80EQ (Microprocessor)
Fan (Number...diameter)		mm	Turbo (1...ø490)
Fan motor			
	Model...Nominal output	W	DK8-53D280H...50 W
	Power source		280 VDC
	No. of pole...r.p.m. (230V, High)	rpm	8P...310
	Run capacitor	VAC, μF	–
Safety device			overcurrent, rotating signal detection, fuse
Electronic expansion valve			
	Coil		UKV-A152
	Coil resistance (at 20°C)	Ω	ORG – GRY : 46 YEL – GRY : 46 RED – GRY : 46 BLK – GRY : 46
	Valve body		UKV-18D31
Heat exchanger			
	Coil		Aluminium plate fin / Copper tube
	Rows...fin pitch	mm	2...1.25
	Face area	m^2	0.350
Panel			
	Model No.		CZ-KPU2
	Auto louver motor		MP24ZN-12V
	Coil resistance (at 25°C)	Ω	380 Ω ± 7% / phase
Drain pump			PLD-12230ST-4
	Rated	V, W	AC 230 V, 50 Hz, 12 W
	Total head & capacity		670 mm, 400 cc/min

7. 4-Way Cassette Type (U1 Type)

Indoor unit (D)

MODEL No.			**S-45MU1E5**
Power source			220 - 230 - 240 V, single-phase, 50/60 Hz
Controller P.C.B. Ass'y			CR-SX80EQ (Microprocessor)
Fan (Number...diameter)		mm	Turbo (1...ø490)
Fan motor			
	Model...Nominal output	W	DK8-53D280H...50 W
	Power source		280 VDC
	No. of pole...r.p.m. (230V, High)	rpm	8P...340
	Run capacitor	VAC, μF	–
Safety device			overcurrent, rotating signal detection, fuse
Electronic expansion valve			
	Coil		UKV-A152
	Coil resistance (at 20°C)	Ω	ORG – GRY : 46 YEL – GRY : 46 RED – GRY : 46 BLK – GRY : 46
	Valve body		UKV-25D32
Heat exchanger			
	Coil		Aluminium plate fin / Copper tube
	Rows...fin pitch	mm	2...1.25
	Face area	m^2	0.350
Panel			
	Model No.		CZ-KPU2
	Auto louver motor		MP24ZN-12V
	Coil resistance (at 25°C)	Ω	380 Ω ± 7% / phase
Drain pump			PLD-12230ST-4
	Rated	V, W	AC 230 V, 50 Hz, 12 W
	Total head & capacity		670 mm, 400 cc/min

4

7. 4-Way Cassette Type (U1 Type)

Indoor unit (E)

MODEL No.			**S-56MU1E5**
Power source			220 - 230 - 240 V, single-phase, 50/60 Hz
Controller P.C.B. Ass'y			CR-SX80EQ (Microprocessor)
Fan (Number...diameter)		mm	Turbo (1...ø490)
Fan motor			
	Model...Nominal output	W	DK8-53D280H...50 W
	Power source		280 VDC
	No. of pole...r.p.m. (230V, High)	rpm	8P...380
	Run capacitor	VAC, μF	–
Safety device			overcurrent, rotating signal detection, fuse
Electronic expansion valve			
	Coil		UKV-A152
	Coil resistance (at 20°C)	Ω	ORG – GRY : 46 YEL – GRY : 46 RED – GRY : 46 BLK – GRY : 46
	Valve body		UKV-25D32
Heat exchanger			
	Coil		Aluminium plate fin / Copper tube
	Rows...fin pitch	mm	2...1.25
	Face area	m^2	0.350
Panel			
	Model No.		CZ-KPU2
	Auto louver motor		MP24ZN-12V
	Coil resistance (at 25°C)	Ω	380 Ω ± 7% / phase
Drain pump			PLD-12230ST-4
	Rated	V, W	AC 230 V, 50 Hz, 12 W
	Total head & capacity		670 mm, 400 cc/min

4

7. 4-Way Cassette Type (U1 Type)

Indoor unit (F)

MODEL No.			**S-73MU1E5**
Power source			220 - 230 - 240 V, single-phase, 50/60 Hz
Controller P.C.B. Ass'y			CR-SX80EQ (Microprocessor)
Fan (Number...diameter)		mm	Turbo (1...ø490)
Fan motor			
	Model...Nominal output	W	DK8-53D280H...50 W
	Power source		280 VDC
	No. of pole...r.p.m. (230V, High)	rpm	8P...450
	Run capacitor	VAC, μF	–
Safety device			overcurrent, rotating signal detection, fuse
Electronic expansion valve			
	Coil		UKV-A152
	Coil resistance (at 20°C)	Ω	ORG – GRY : 46 YEL – GRY : 46 RED – GRY : 46 BLK – GRY : 46
	Valve body		UKV-25D32
Heat exchanger			
	Coil		Aluminium plate fin / Copper tube
	Rows...fin pitch	mm	2...1.25
	Face area	m^2	0.390
Panel			
	Model No.		CZ-KPU2
	Auto louver motor		MP24ZN-12V
	Coil resistance (at 25°C)	Ω	380 Ω ± 7% / phase
Drain pump			PLD-12230ST-4
	Rated	V, W	AC 230 V, 50 Hz, 12 W
	Total head & capacity		670 mm, 400 cc/min

7. 4-Way Cassette Type (U1 Type)

Indoor unit (G)

MODEL No.			**S-106MU1E5**
Power source			220 - 230 - 240 V, single-phase, 50/60 Hz
Controller P.C.B. Ass'y			CR-SX80EQ (Microprocessor)
Fan (Number...diameter)		mm	Turbo (1...ø490)
Fan motor			
	Model...Nominal output	W	SIC-72FW-D892-1...92 W
	Power source		280 VDC
	No. of pole...r.p.m. (230V, High)	rpm	8P...590
	Run capacitor	VAC, μF	–
Safety device			overcurrent, rotating signal detection, fuse
Electronic expansion valve			
	Coil		UKV-A152
	Coil resistance (at 20°C)	Ω	ORG – GRY : 46 YEL – GRY : 46 RED – GRY : 46 BLK – GRY : 46
	Valve body		UKV-30D33
Heat exchanger			
	Coil		Aluminium plate fin / Copper tube
	Rows...fin pitch	mm	2...1.25
	Face area	m^2	0.520
Panel			
	Model No.		CZ-KPU2
	Auto louver motor		MP24ZN-12V
	Coil resistance (at 25°C)	Ω	380 Ω ± 7% / phase
Drain pump			PLD-12230ST-4
	Rated	V, W	AC 230 V, 50 Hz, 12 W
	Total head & capacity		670 mm, 400 cc/min

7. 4-Way Cassette Type (U1 Type)

Indoor unit (H)

MODEL No.			**S-140MU1E5**
Power source			220 - 230 - 240 V, single-phase, 50/60 Hz
Controller P.C.B. Ass'y			CR-SX80EQ (Microprocessor)
Fan (Number...diameter)		mm	Turbo (1...ø490)
Fan motor			
	Model...Nominal output	W	SIC-72FW-D892-1...92 W
	Power source		280 VDC
	No. of pole...r.p.m. (230V, High)	rpm	8P...610
	Run capacitor	VAC, μF	–
Safety device			overcurrent, rotating signal detection, fuse
Electronic expansion valve			
	Coil		UKV-A152
	Coil resistance (at 20°C)	Ω	ORG – GRY : 46 YEL – GRY : 46 RED – GRY : 46 BLK – GRY : 46
	Valve body		UKV-30D33
Heat exchanger			
	Coil		Aluminium plate fin / Copper tube
	Rows...fin pitch	mm	2...1.25
	Face area	m^2	0.520
Panel			
	Model No.		CZ-KPU2
	Auto louver motor		MP24ZN-12V
	Coil resistance (at 25°C)	Ω	380 Ω ± 7% / phase
Drain pump			PLD-12230ST-4
	Rated	V, W	AC 230 V, 50 Hz, 12 W
	Total head & capacity		670 mm, 400 cc/min

7. 4-Way Cassette Type (U1 Type)

Indoor unit (I)

MODEL No.			**S-160MU1E5**
Power source			220 - 230 - 240 V, single-phase, 50/60 Hz
Controller P.C.B. Ass'y			CR-SX80EQ (Microprocessor)
Fan (Number...diameter)		mm	Turbo (1...ø490)
Fan motor			
	Model...Nominal output	W	SIC-72FW-D892-1...92 W
	Power source		280 VDC
	No. of pole...r.p.m. (230V, High)	rpm	8P...630
	Run capacitor	VAC, μF	–
Safety device			overcurrent, rotating signal detection, fuse
Electronic expansion valve			
	Coil		UKV-A152
	Coil resistance (at 20°C)	Ω	ORG – GRY : 46 YEL – GRY : 46 RED – GRY : 46 BLK – GRY : 46
	Valve body		UKV-30D33
Heat exchanger			
	Coil		Aluminium plate fin / Copper tube
	Rows...fin pitch	mm	2...1.25
	Face area	m^2	0.520
Panel			
	Model No.		CZ-KPU2
	Auto louver motor		MP24ZN-12V
	Coil resistance (at 25°C)	Ω	380 Ω ± 7% / phase
Drain pump			PLD-12230ST-4
	Rated	V, W	AC 230 V, 50 Hz, 12 W
	Total head & capacity		670 mm, 400 cc/min

7. 4-Way Cassette Type (U1 Type)

7-3. Dimensional Data

Indoor unit : S-22MU1E5/28MU1E5/36MU1E5/45MU1E5/56MU1E5

unit: mm

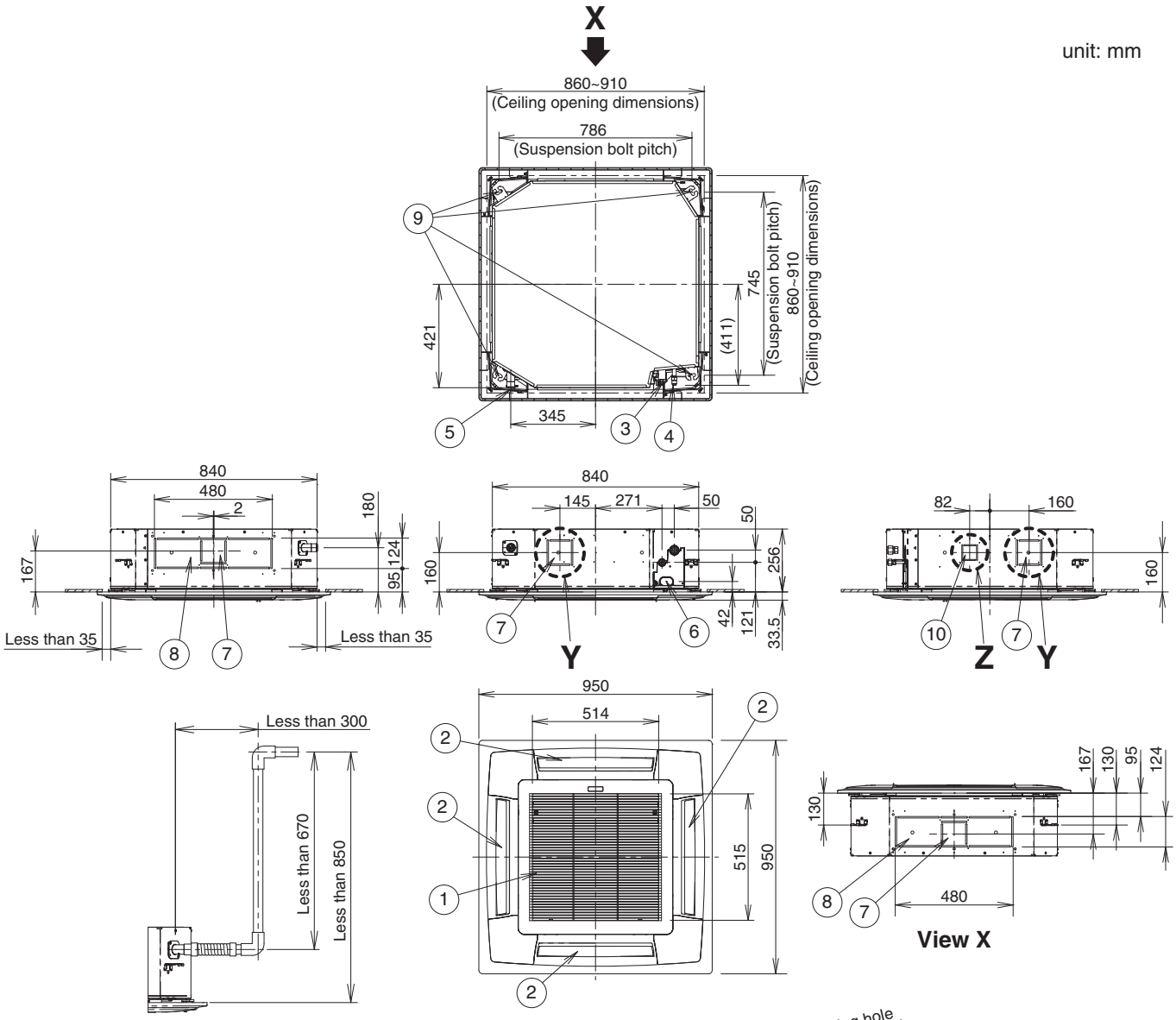

Raise dimension of drain tube

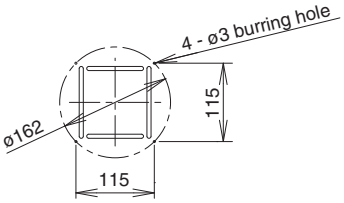

Detailed view Y

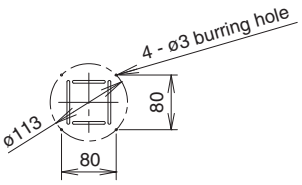

Detailed view Z

①	Air intake
②	Discharge outlet
③	Refrigerant tubing (liquid tube) ø6.35 (flared)
④	Refrigerant tubing (gas tube) ø12.7 (flared)
⑤	Drain tube connection port VP25 (outer dia.ø32)
⑥	Power supply port
⑦	Discharge duct connection port (ø150)
⑧	Vaporizing-type humidifier (optional) installation area
⑨	Suspension bolt hole (4-12 × 30 elongated hole)
⑩	Fresh air intake duct connection port (ø100) *

* Necessary to provide optional air intake kit.

* The length of the suspension bolts should be selected so that there is a gap of 30 mm or more below the lower surface of the ceiling (18 mm or more below the lower surface of the main unit), as shown in the figure at right. If the suspension bolt is too long, it will contact the ceiling panel and the unit cannot be installed.

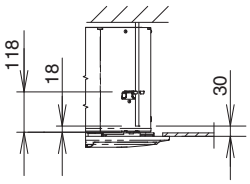

<Filter dimension>

520 x 520 x 16

7. 4-Way Cassette Type (U1 Type)

Indoor unit : S-73MU1E5

unit: mm

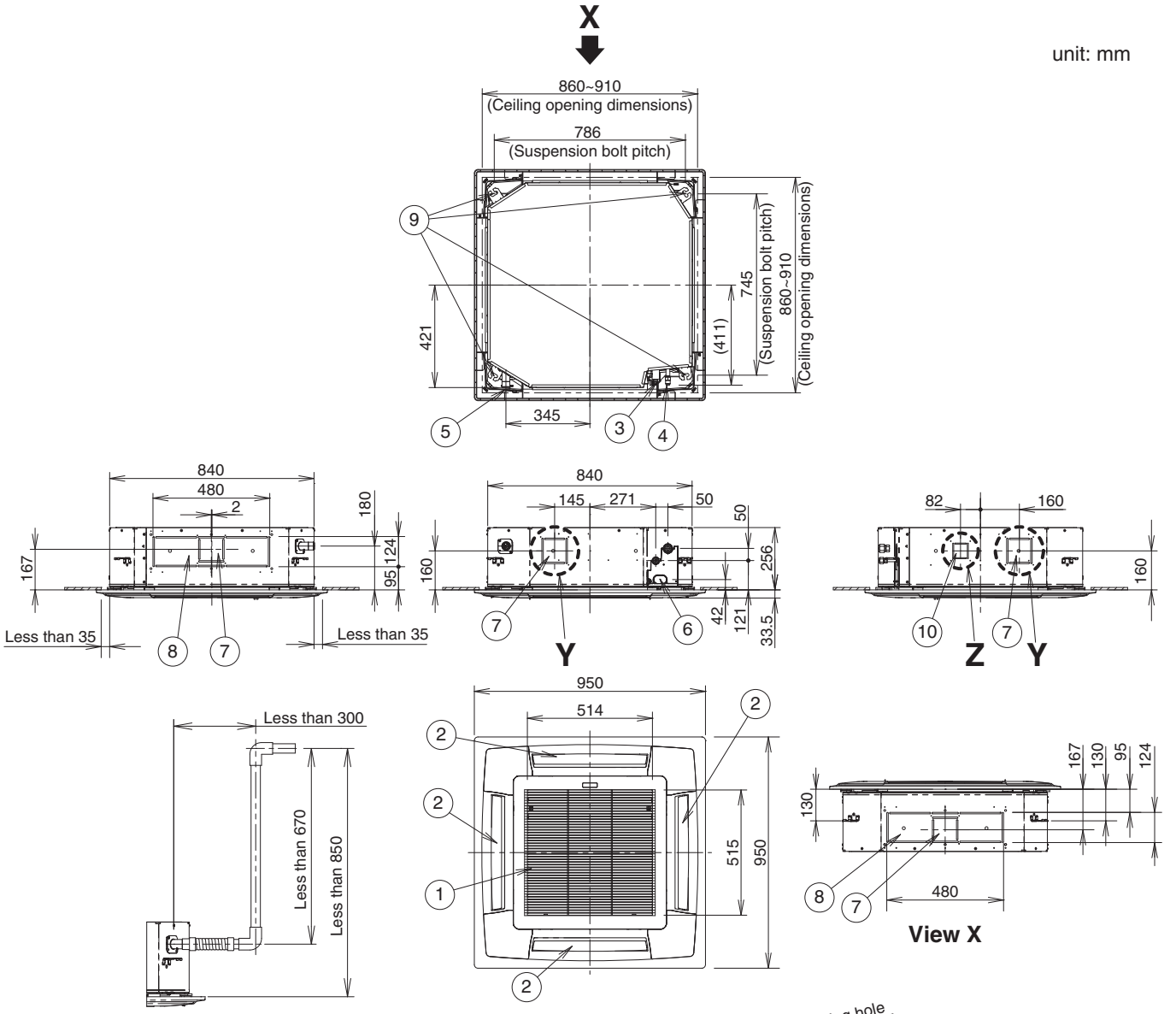

Raise dimension of drain tube

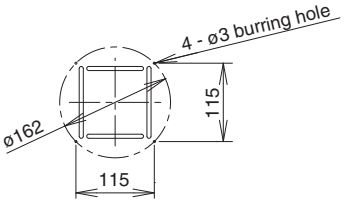

Detailed view Y

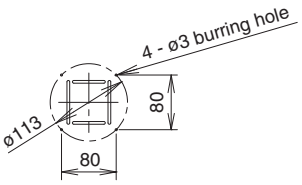

Detailed view Z

①	Air intake
②	Discharge outlet
③	Refrigerant tubing (liquid tube) ø9.52 (flared)
④	Refrigerant tubing (gas tube) ø15.88 (flared)
⑤	Drain tube connection port VP25 (outer dia.ø32)
⑥	Power supply port
⑦	Discharge duct connection port (ø150)
⑧	Vaporizing-type humidifier (optional) installation area
⑨	Suspension bolt hole (4-12 × 30 elongated hole)
⑩	Fresh air intake duct connection port (ø100) *

* Necessary to provide optional air intake kit.

* The length of the suspension bolts should be selected so that there is a gap of 30 mm or more below the lower surface of the ceiling (18 mm or more below the lower surface of the main unit), as shown in the figure at right. If the suspension bolt is too long, it will contact the ceiling panel and the unit cannot be installed.

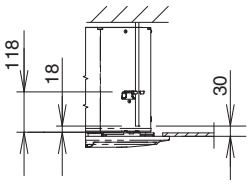

<Filter dimension>

520 x 520 x 16

7. 4-Way Cassette Type (U1 Type)

Indoor unit : S-160MU1E5/140MU1E5/160MU1E5

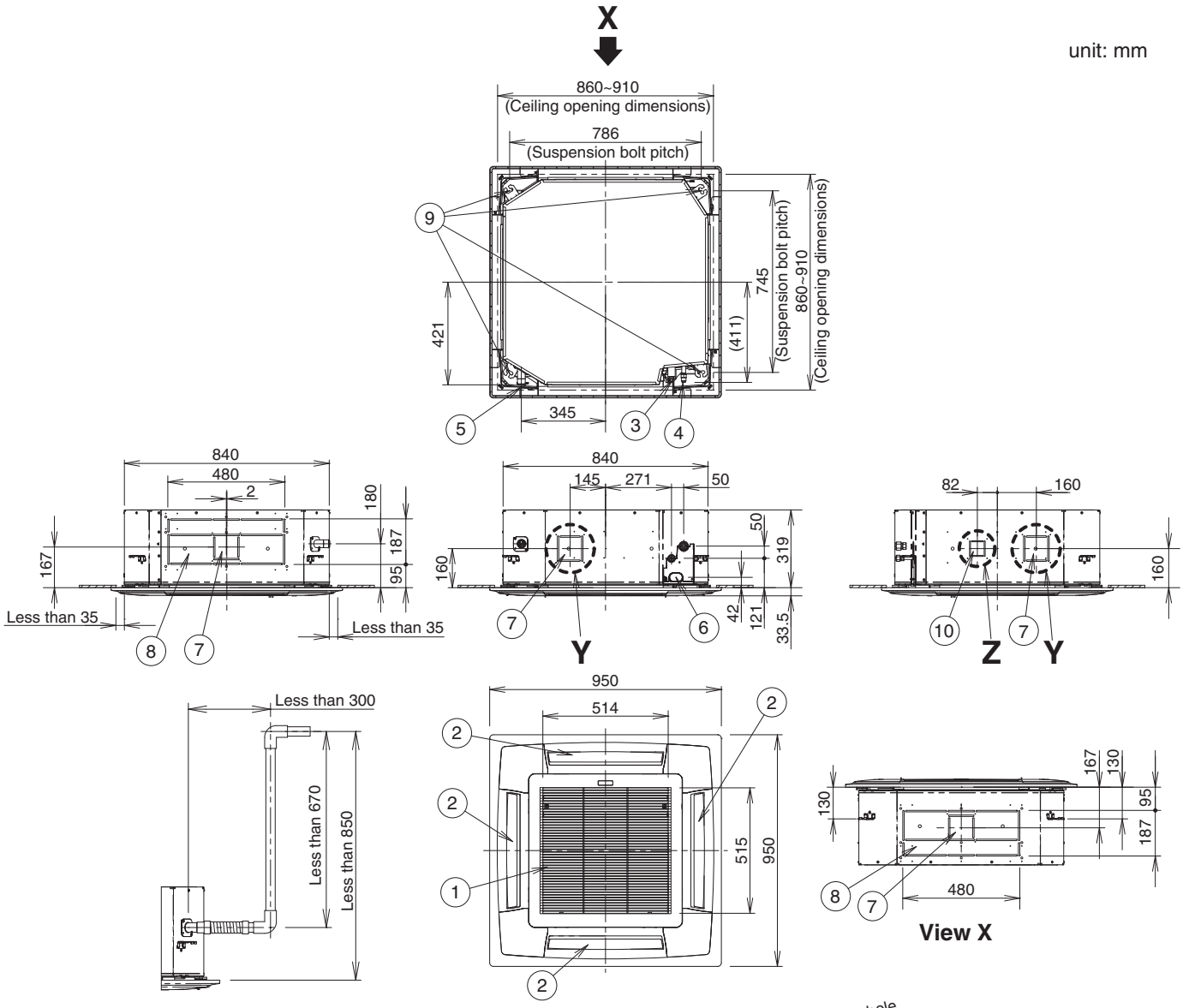

Raise dimension of drain tube

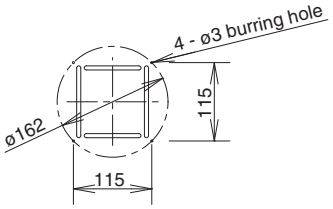

Detailed view Y

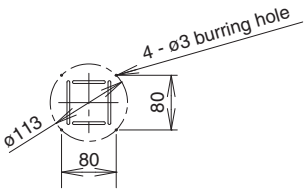

Detailed view Z

①	Air intake
②	Discharge outlet
③	Refrigerant tubing (liquid tube) ø9.52 (flared)
④	Refrigerant tubing (gas tube) ø15.88 (flared)
⑤	Drain tube connection port VP25 (outer dia. ø32)
⑥	Power supply port
⑦	Discharge duct connection port (ø150)
⑧	Vaporizing-type humidifier (optional) installation area
⑨	Suspension bolt hole (4-12 × 30 elongated hole)
⑩	Fresh air intake duct connection port (ø100) *

* Necessary to provide optional air intake kit.

* The length of the suspension bolts should be selected so that there is a gap of 30 mm or more below the lower surface of the ceiling (18 mm or more below the lower surface of the main unit), as shown in the figure at right. If the suspension bolt is too long, it will contact the ceiling panel and the unit cannot be installed.

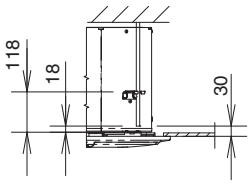

<Filter dimension>

520 x 520 x 16

7. 4-Way Cassette Type (U1 Type)

7-4. Noise Criterion Curves

Both 50Hz and 60Hz
Strong
Weak

MODEL	: S-22MU1E5/28MU1E5/36MU1E5	
SOUND LEVEL	: STRONG	29 dB(A)
	HIGH	28 dB(A)
	LOW	27 dB(A)
CONDITION	: 1.5 m directly below unit	

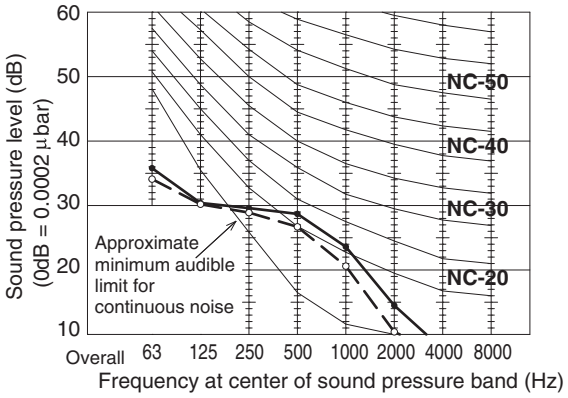

MODEL	: S-45MU1E5	
SOUND LEVEL	: STRONG	30 dB(A)
	HIGH	28 dB(A)
	LOW	27 dB(A)
CONDITION:	1.5 m directly below unit	

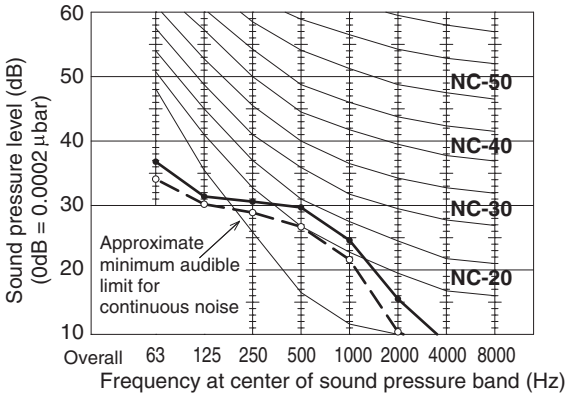

MODEL	: S-56MU1E5	
SOUND LEVEL	: STRONG	32 dB(A)
	HIGH	29 dB(A)
	LOW	27 dB(A)
CONDITION	: 1.5 m directly below unit	

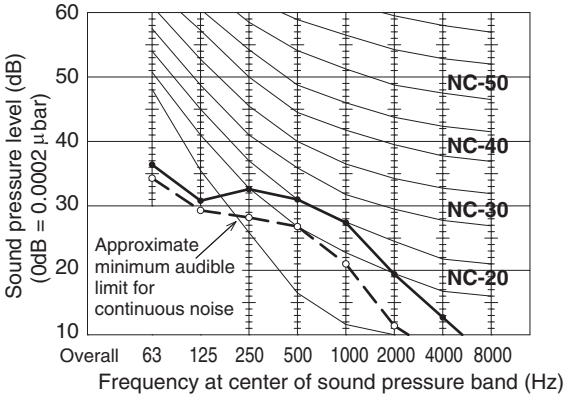

MODEL:	S-73MU1E5	
SOUND LEVEL:	STRONG	35 dB(A)
	HIGH	31 dB(A)
	LOW	28 dB(A)
CONDITION:	1.5 m directly below unit	

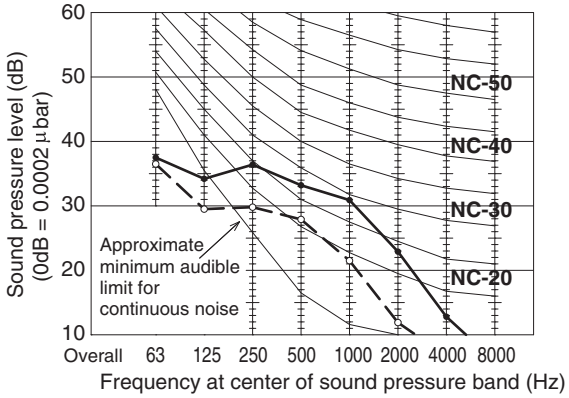

MODEL	: S-106MU1E5	
SOUND LEVEL	: STRONG	43 dB(A)
	HIGH	38 dB(A)
	LOW	32 dB(A)
CONDITION	: 1.5 m directly below unit	

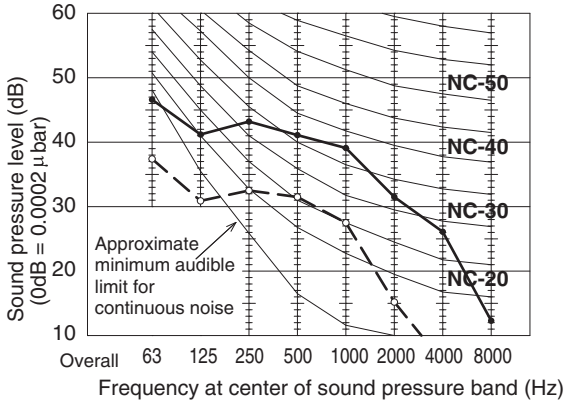

MODEL:	S-140MU1E5	
SOUND LEVEL:	STRONG	44 dB(A)
	HIGH	39 dB(A)
	LOW	33 dB(A)
CONDITION:	1.5 m directly below unit	

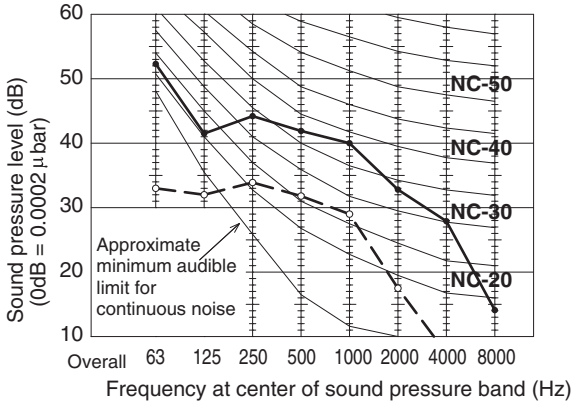

7. 4-Way Cassette Type (U1 Type)

Both 50Hz and 60Hz
Strong
Weak

MODEL	: S-160MU1E5	
SOUND LEVEL	: STRONG	45 dB(A)
	HIGH	40 dB(A)
	LOW	34 dB(A)
CONDITION	: 1.5 m directly below unit	

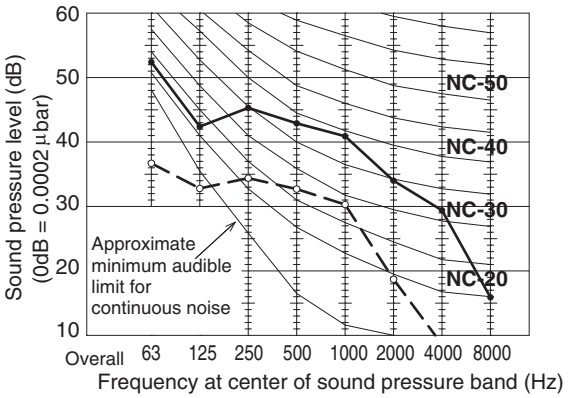

4

7. 4-Way Cassette Type (U1 Type)

7-5. Air Flow Distance / Temperature Chart

S-22MU1E5/28MU1E5/36MU1E5/45MU1E5/56MU1E5

Heating : Distribution of wind velocity

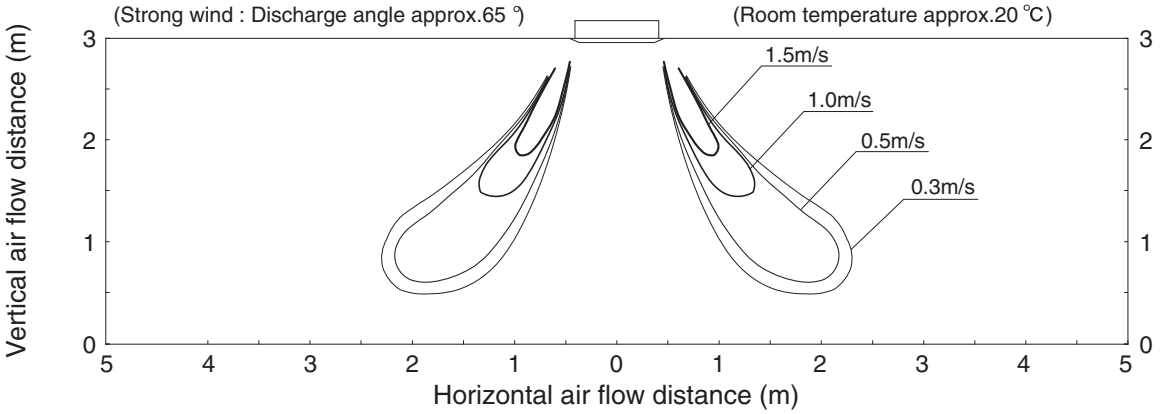

Heating : Distribution of temperature

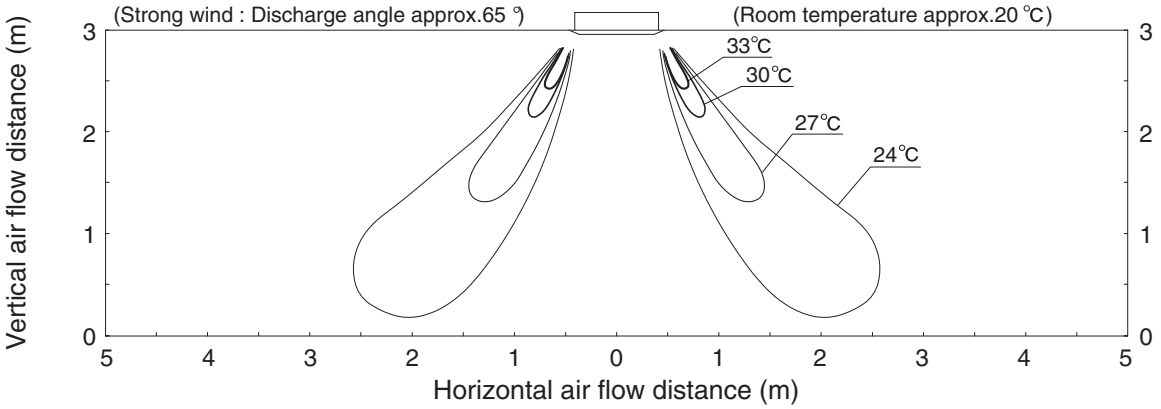

4

Cooling : Distribution of wind velocity

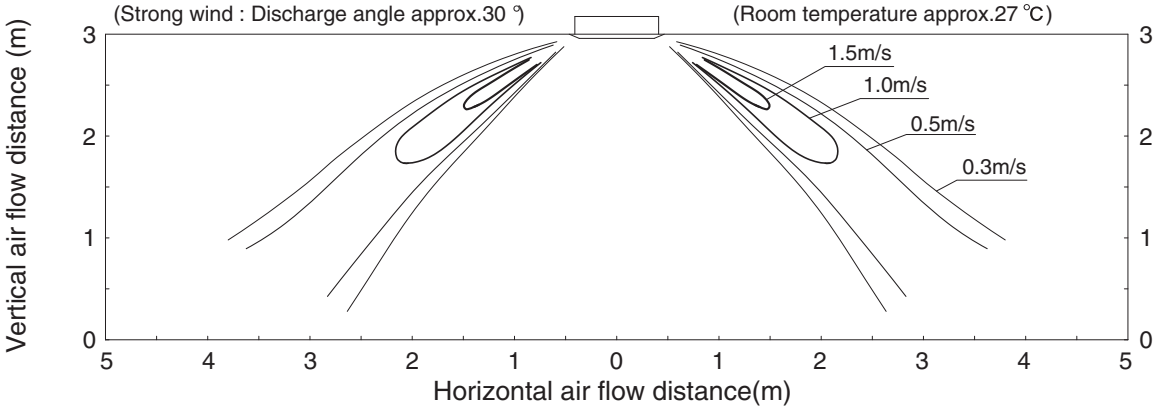

Cooling : Distribution of temperature

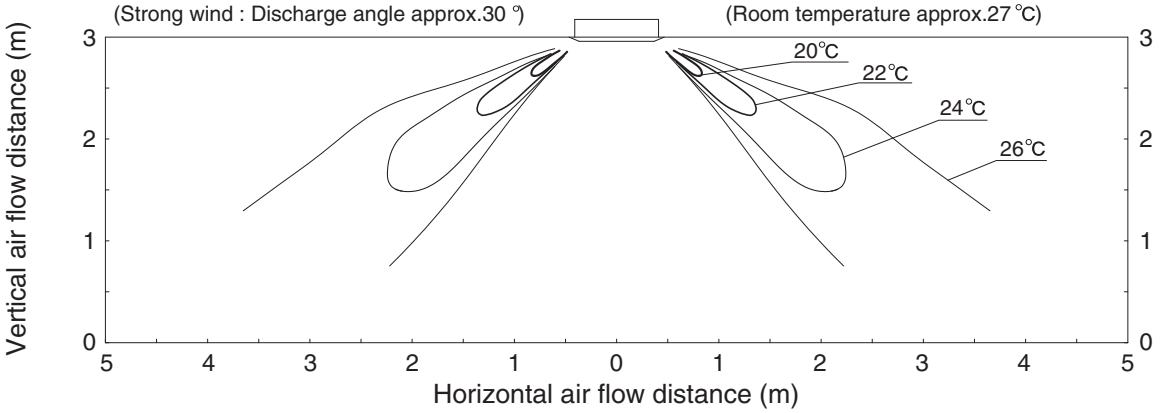

7. 4-Way Cassette Type (U1 Type)

S-73MU1E5

Heating : Distribution of wind velocity

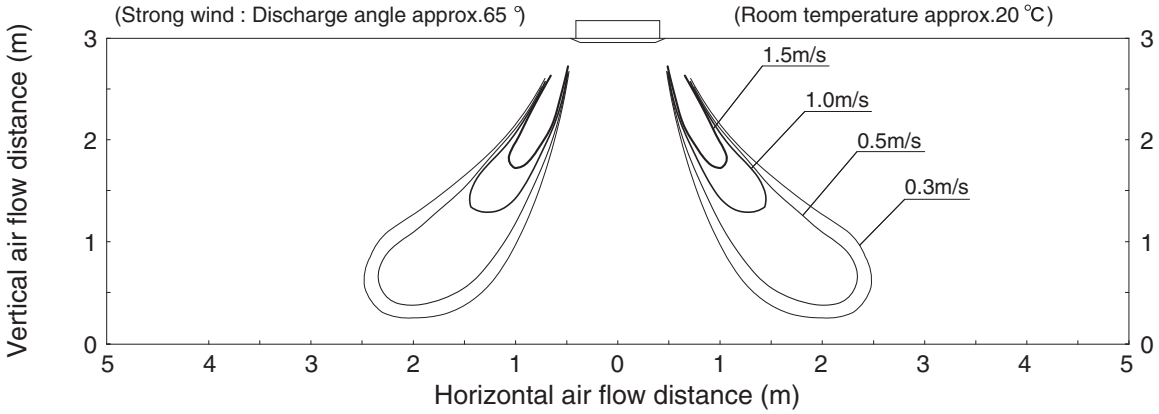

Heating : Distribution of temperature

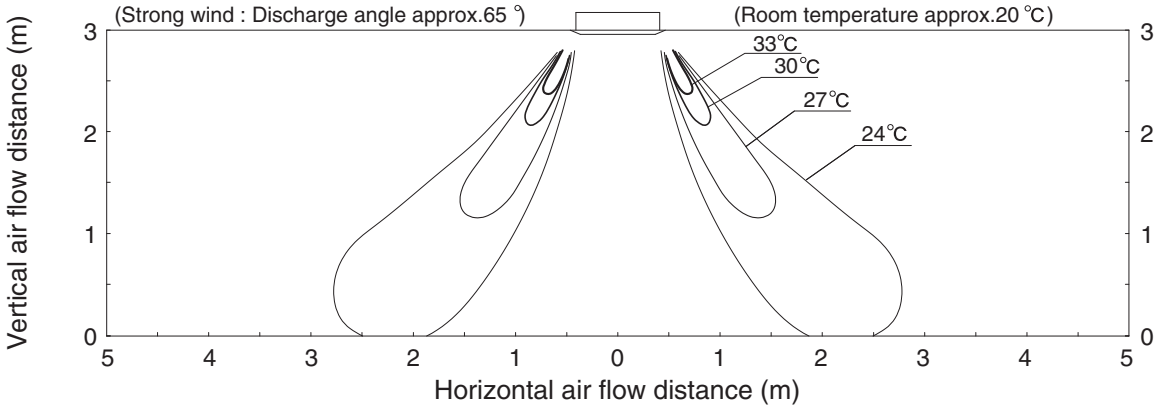

Cooling : Distribution of wind velocity

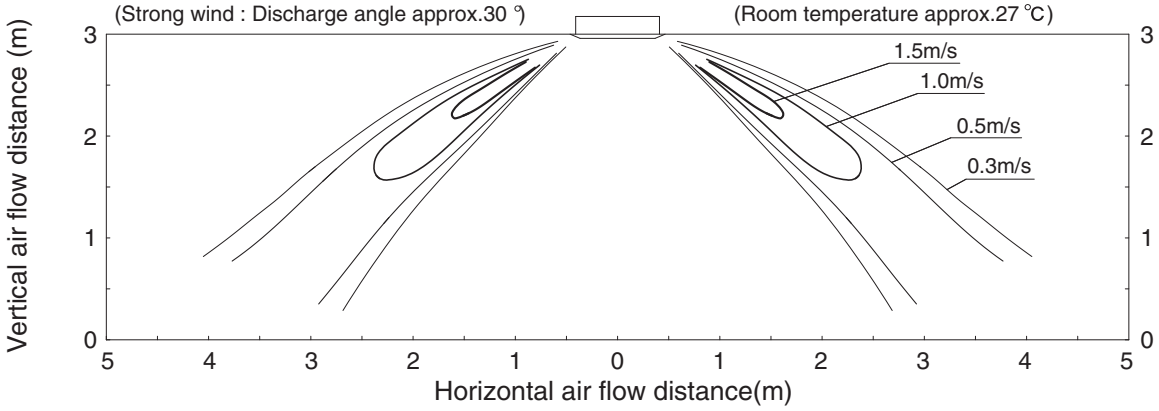

Cooling : Distribution of temperature

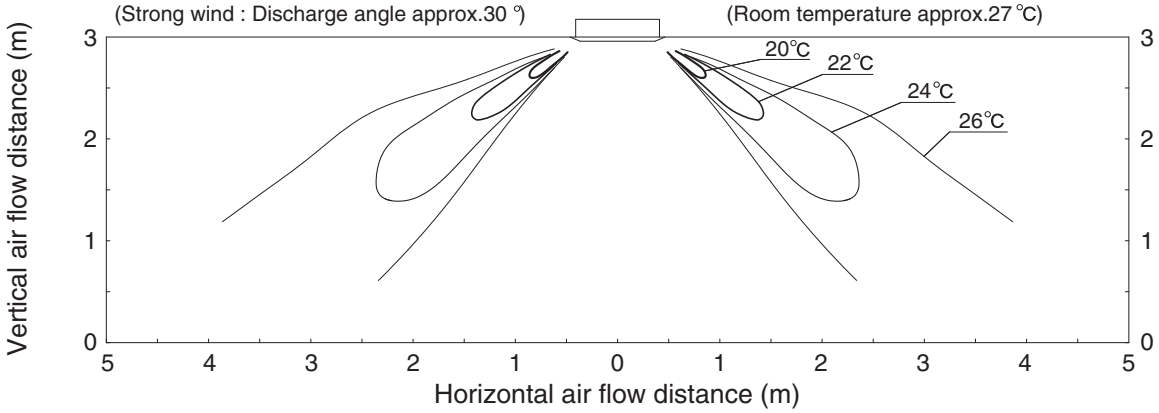

7. 4-Way Cassette Type (U1 Type)

S-106MU1E5/140MU1E5/160MU1E5

Heating : Distribution of wind velocity

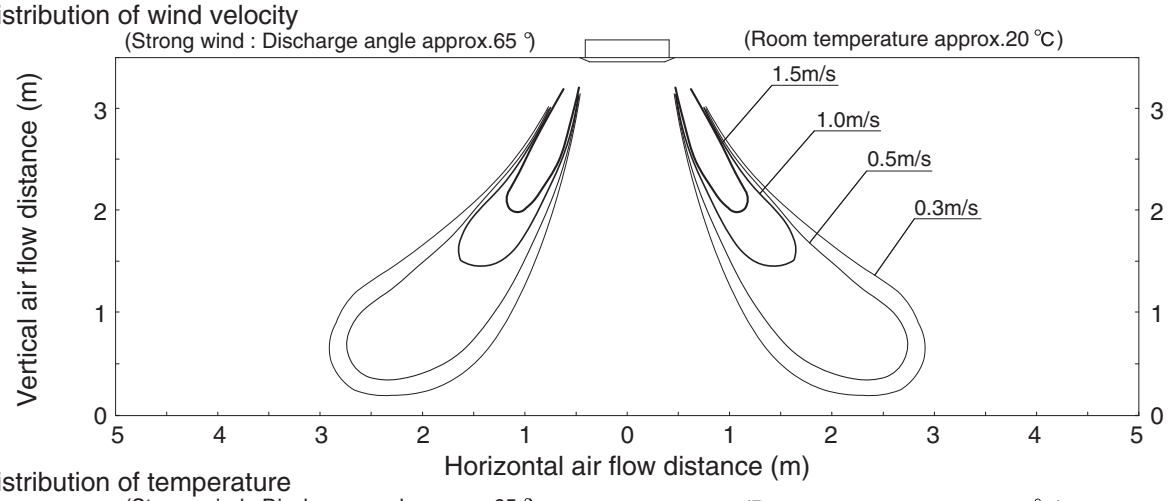

Heating : Distribution of temperature

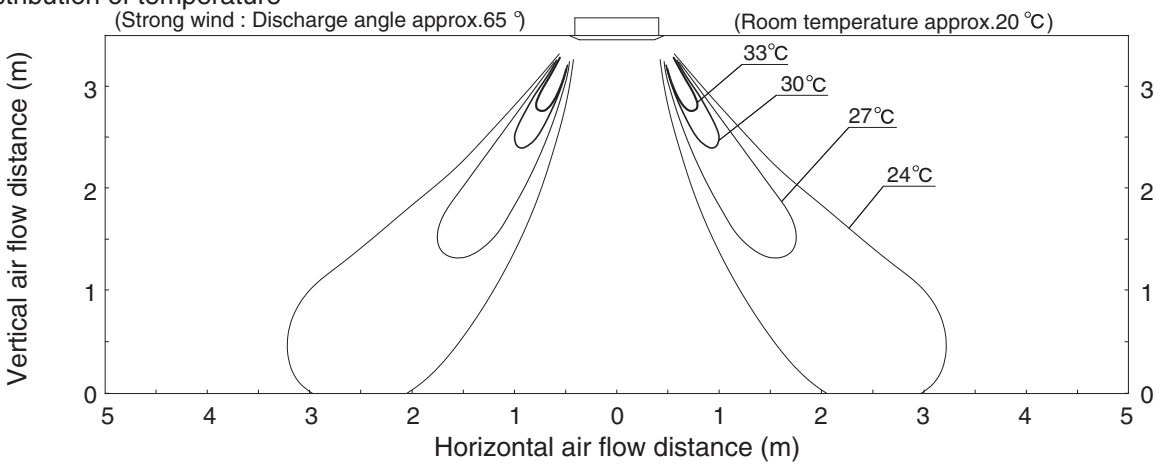

Cooling : Distribution of wind velocity

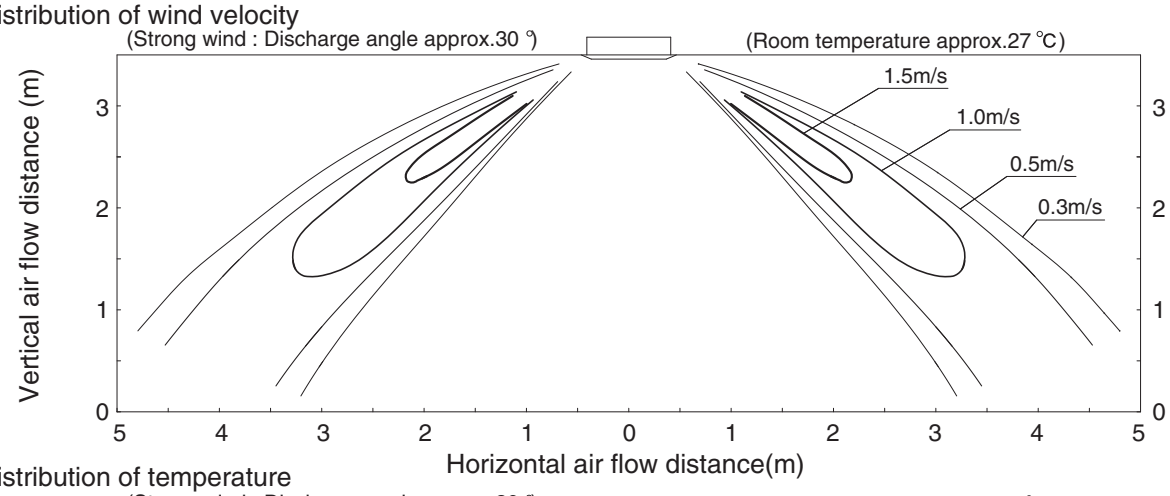

Cooling : Distribution of temperature

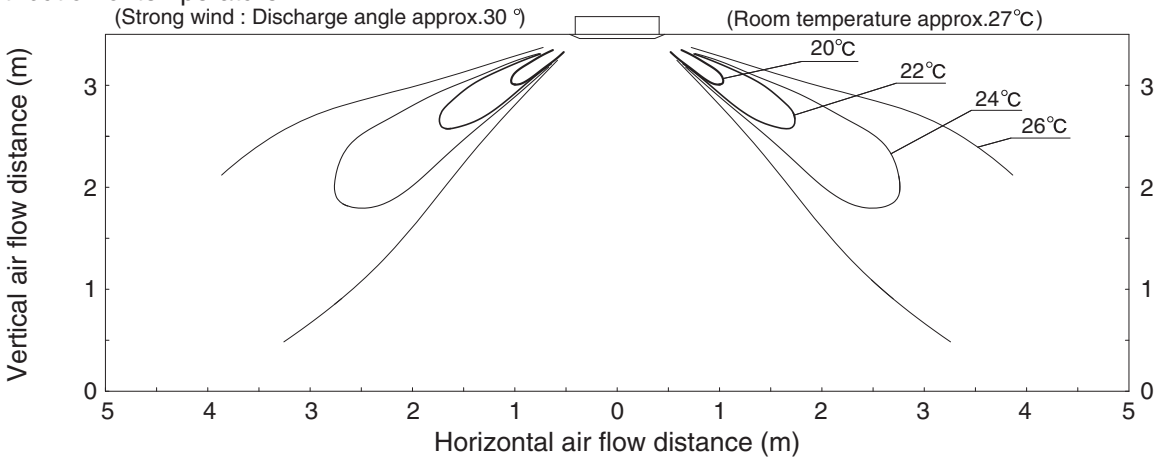

8. 4-Way Cassette 60×60 Type (Y1 Type)

8-1. Specifications

Unit specifications (A)

MODEL No.	Indoor Unit		S-22MY1E5					
POWER SOURCE			220 - 230 - 240 V, single-phase, 50/60 Hz					
PERFORMANCE			Cooling			Heating		
Capacity		kW	2.2			2.5		
		BTU / h	7,500			8,500		
Air circulation (Hi / Me / Lo)		m^3 / h	480 / 420 / 360					
Moisture removal (High)		Liters / h	0.2			–		
ELECTRICAL RATINGS								
Voltage rating		V	220	230	240	220	230	240
Available voltage range		V	198 - 264			198 - 264		
Running amperes		A	0.16	0.16	0.15	0.13	0.13	0.12
Power input		W	24	25	25	14	15	15
Power factor		%	68	68	69	49	50	52
Max. starting amperes		A	–	–	–	–	–	–
FEATURES								
Controls			Microprocessor					
Timer			ON / OFF Timer (Max. 72 h)					
Fan speeds			3 and Automatic control					
Air filter			Washable, easy access, long life (2,500 h)					
Refrigerant control			Electronic expansion valve					
Operation sound (Hi / Me / Lo)		dB-A	30 / 27 / 25					
Refrigerant tubing connections			Flare type					
Refrigerant tube diameter	Liquid tube	mm (in.)	6.35 (1 / 4)					
	Gas tube	mm (in.)	12.7 (1 / 2)					
Drain connection			OD26 mm					
Drain pump			Max. head 635 mm above drain connection					
Panel			Optional (CZ-KPY2)					
Remote controller			Optional (Wired / Wireless)					
Refrigerant tubing kit / Accessories			Optional / –					
Color (Approximate value)			Munsell 2.5GY 9.0 / 0.5, RAL 9001-GL (resemblant color)					
DIMENSIONS & WEIGHT			Indoor unit (including panel)			Package		
						Body	Panel	
Unit dimensions	Height	mm (in.)	313 (12-21 / 64)			290 (11-27 / 64)	105 (4-9 / 64)	
	Width	mm (in.)	625 (24-39 / 64)			714 (28-7 / 64)	665 (26-3 / 16)	
	Depth	mm (in.)	625 (24-39 / 64)			630 (24-51 / 64)	678 (26-11 / 16)	
Net weight		kg (lbs.)	16 + 2.4 (35.3 + 5.3)			–	–	
Shipping weight		kg (lbs.)	–			19 (41.9)	3.5 (7.7)	
Shipping volume		m^3 (cu.ft)	–			0.13 (4.6)	0.047 (1.7)	

DATA SUBJECT TO CHANGE WITHOUT NOTICE.

Rated conditions
Cooling: Indoor air temperature 27°C DB / 19°C WB; Outdoor air temperature 35°C DB
Heating: Indoor air temperature 20°C DB; Outdoor air temperature 7°C DB / 6°C WB

8. 4-Way Cassette 60×60 Type (Y1 Type)

Unit specifications (B)

MODEL No.	Indoor Unit		S-28MY1E5					
POWER SOURCE			220 - 230 - 240 V, single-phase, 50/60 Hz					
PERFORMANCE			Cooling			Heating		
Capacity		kW	2.8			3.2		
		BTU / h	9,600			11,000		
Air circulation (Hi / Me / Lo)		m^3 / h	480 / 420 / 360					
Moisture removal (High)		Liters / h	0.6			–		
ELECTRICAL RATINGS								
Voltage rating		V	220	230	240	220	230	240
Available voltage range		V	198 - 264			198 - 264		
Running amperes		A	0.16	0.16	0.15	0.13	0.13	0.12
Power input		W	24	25	25	14	15	15
Power factor		%	68	68	69	49	50	52
Max. starting amperes		A	–	–	–	–	–	–
FEATURES								
Controls			Microprocessor					
Timer			ON / OFF Timer (Max. 72 h)					
Fan speeds			3 and Automatic control					
Air filter			Washable, easy access, long life (2,500 h)					
Refrigerant control			Electronic expansion valve					
Operation sound (Hi / Me / Lo)		dB-A	30 / 27 / 25					
Refrigerant tubing connections			Flare type					
Refrigerant tube diameter	Liquid tube	mm (in.)	6.35 (1 / 4)					
	Gas tube	mm (in.)	12.7 (1 / 2)					
Drain connection			OD26 mm					
Drain pump			Max. head 635 mm above drain connection					
Panel			Optional (CZ-KPY2)					
Remote controller			Optional (Wired / Wireless)					
Refrigerant tubing kit / Accessories			Optional / –					
Color (Approximate value)			Munsell 2.5GY 9.0 / 0.5, RAL 9001-GL (resemblant color)					
DIMENSIONS & WEIGHT			Indoor unit (including panel)			Package		
						Body	Panel	
Unit dimensions	Height	mm (in.)	313 (12-21 / 64)			290 (11-27 / 64)	105 (4-9 / 64)	
	Width	mm (in.)	625 (24-39 / 64)			714 (28-7 / 64)	665 (26-3 / 16)	
	Depth	mm (in.)	625 (24-39 / 64)			630 (24-51 / 64)	678 (26-11 / 16)	
Net weight		kg (lbs.)	16 + 2.4 (35.3 + 5.3)			–	–	
Shipping weight		kg (lbs.)	–			19 (41.9)	3.5 (7.7)	
Shipping volume		m^3 (cu.ft)	–			0.13 (4.6)	0.047 (1.7)	

DATA SUBJECT TO CHANGE WITHOUT NOTICE.

Rated conditions
Cooling: Indoor air temperature 27°C DB / 19°C WB; Outdoor air temperature 35°C DB
Heating: Indoor air temperature 20°C DB; Outdoor air temperature 7°C DB / 6°C WB

8. 4-Way Cassette 60×60 Type (Y1 Type)

Unit specifications (C)

MODEL No.	Indoor Unit		S-36MY1E5					
POWER SOURCE			220 - 230 - 240 V, single-phase, 50/60 Hz					
PERFORMANCE			Cooling			Heating		
Capacity		kW	3.6			4.2		
		BTU / h	12,000			14,000		
Air circulation (Hi / Me / Lo)		m^3 / h	540 / 480 / 420					
Moisture removal (High)		Liters / h	1.1			–		
ELECTRICAL RATINGS								
Voltage rating		V	220	230	240	220	230	240
Available voltage range		V	198 - 264			198 - 264		
Running amperes		A	0.18	0.18	0.17	0.15	0.15	0.14
Power input		W	26	27	27	17	17	18
Power factor		%	66	65	66	52	49	54
Max. starting amperes		A	–	–	–	–	–	–
FEATURES								
Controls			Microprocessor					
Timer			ON / OFF Timer (Max. 72 h)					
Fan speeds			3 and Automatic control					
Air filter			Washable, easy access, long life (2,500 h)					
Refrigerant control			Electronic expansion valve					
Operation sound (Hi / Me / Lo)		dB-A	32 / 29 / 26					
Refrigerant tubing connections			Flare type					
Refrigerant tube diameter	Liquid tube	mm (in.)	6.35 (1 / 4)					
	Gas tube	mm (in.)	12.7 (1 / 2)					
Drain connection			OD26 mm					
Drain pump			Max. head 635 mm above drain connection					
Panel			Optional (CZ-KPY2)					
Remote controller			Optional (Wired / Wireless)					
Refrigerant tubing kit / Accessories			Optional / –					
Color (Approximate value)			Munsell 2.5GY 9.0 / 0.5, RAL 9001-GL (resemblant color)					
DIMENSIONS & WEIGHT			Indoor unit (including panel)			Package		
						Body	Panel	
Unit dimensions	Height	mm (in.)	313 (12-21 / 64)			290 (11-27 / 64)	105 (4-9 / 64)	
	Width	mm (in.)	625 (24-39 / 64)			714 (28-7 / 64)	665 (26-3 / 16)	
	Depth	mm (in.)	625 (24-39 / 64)			630 (24-51 / 64)	678 (26-11 / 16)	
Net weight		kg (lbs.)	16 + 2.4 (35.3 + 5.3)			–	–	
Shipping weight		kg (lbs.)	–			19 (41.9)	3.5 (7.7)	
Shipping volume		m^3 (cu.ft)	–			0.13 (4.6)	0.047 (1.7)	

DATA SUBJECT TO CHANGE WITHOUT NOTICE.

Rated conditions
Cooling: Indoor air temperature 27°C DB / 19°C WB; Outdoor air temperature 35°C DB
Heating: Indoor air temperature 20°C DB; Outdoor air temperature 7°C DB / 6°C WB

8. 4-Way Cassette 60×60 Type (Y1 Type)

Unit specifications (D)

MODEL No.	Indoor Unit		S-45MY1E5					
POWER SOURCE			220 - 230 - 240 V, single-phase, 50/60 Hz					
PERFORMANCE			Cooling			Heating		
Capacity		kW	4.7			5.0		
		BTU / h	16,000			17,000		
Air circulation (Hi / Me / Lo)		m^3 / h	640 / 510 / 450					
Moisture removal (High)		Liters / h	1.5			–		
ELECTRICAL RATINGS								
Voltage rating		V	220	230	240	220	230	240
Available voltage range		V	198 - 264			198 - 264		
Running amperes		A	0.21	0.21	0.20	0.18	0.18	0.17
Power input		W	30	31	31	20	21	21
Power factor		%	65	64	65	51	51	51
Max. starting amperes		A	–	–	–	–	–	–
FEATURES								
Controls			Microprocessor					
Timer			ON / OFF Timer (Max. 72 h)					
Fan speeds			3 and Automatic control					
Air filter			Washable, easy access, long life (2,500 h)					
Refrigerant control			Electronic expansion valve					
Operation sound (Hi / Me / Lo)		dB-A	36 / 32 / 28					
Refrigerant tubing connections			Flare type					
Refrigerant tube diameter	Liquid tube	mm (in.)	6.35 (1 / 4)					
	Gas tube	mm (in.)	12.7 (1 / 2)					
Drain connection			OD26 mm					
Drain pump			Max. head 635 mm above drain connection					
Panel			Optional (CZ-KPY2)					
Remote controller			Optional (Wired / Wireless)					
Refrigerant tubing kit / Accessories			Optional / –					
Color (Approximate value)			Munsell 2.5GY 9.0 / 0.5, RAL 9001-GL (resemblant color)					
DIMENSIONS & WEIGHT			Indoor unit (including panel)			Package		
						Body	Panel	
Unit dimensions	Height	mm (in.)	313 (12-21 / 64)			290 (11-27 / 64)	105 (4-9 / 64)	
	Width	mm (in.)	625 (24-39 / 64)			714 (28-7 / 64)	665 (26-3 / 16)	
	Depth	mm (in.)	625 (24-39 / 64)			630 (24-51 / 64)	678 (26-11 / 16)	
Net weight		kg (lbs.)	16 + 2.4 (35.3 + 5.3)			–	–	
Shipping weight		kg (lbs.)	–			19 (41.9)	3.5 (7.7)	
Shipping volume		m^3 (cu.ft)	–			0.13 (4.6)	0.047 (1.7)	

DATA SUBJECT TO CHANGE WITHOUT NOTICE.

Rated conditions
Cooling: Indoor air temperature 27°C DB / 19°C WB; Outdoor air temperature 35°C DB
Heating: Indoor air temperature 20°C DB; Outdoor air temperature 7°C DB / 6°C WB

8. 4-Way Cassette 60×60 Type (Y1 Type)

Unit specifications (E)

MODEL No.	Indoor Unit		S-56MY1E5					
POWER SOURCE			220 - 230 - 240 V, single-phase, 50/60 Hz					
PERFORMANCE			Cooling			Heating		
Capacity		kW	5.6			6.3		
		BTU / h	19,000			21,000		
Air circulation (Hi / Me / Lo)		m^3 / h	750 / 630 / 540					
Moisture removal (High)		Liters / h	1.9			–		
ELECTRICAL RATINGS								
Voltage rating		V	220	230	240	220	230	240
Available voltage range		V	198 - 264			198 - 264		
Running amperes		A	0.29	0.29	0.28	0.26	0.26	0.25
Power input		W	37	38	38	29	29	29
Power factor		%	58	57	57	51	48	48
Max. starting amperes		A	–	–	–	–	–	–
FEATURES								
Controls			Microprocessor					
Timer			ON / OFF Timer (Max. 72 h)					
Fan speeds			3 and Automatic control					
Air filter			Washable, easy access, long life (2,500 h)					
Refrigerant control			Electronic expansion valve					
Operation sound (Hi / Me / Lo)		dB-A	41 / 37 / 33					
Refrigerant tubing connections			Flare type					
Refrigerant tube diameter	Liquid tube	mm (in.)	6.35 (1 / 4)					
	Gas tube	mm (in.)	12.7 (1 / 2)					
Drain connection			OD26 mm					
Drain pump			Max. head 635 mm above drain connection					
Panel			Optional (CZ-KPY2)					
Remote controller			Optional (Wired / Wireless)					
Refrigerant tubing kit / Accessories			Optional / –					
Color (Approximate value)			Munsell 2.5GY 9.0 / 0.5, RAL 9001-GL (resemblant color)					
DIMENSIONS & WEIGHT			Indoor unit (including panel)			Package		
						Body	Panel	
Unit dimensions	Height	mm (in.)	313 (12-21 / 64)			290 (11-27 / 64)	105 (4-9 / 64)	
	Width	mm (in.)	625 (24-39 / 64)			714 (28-7 / 64)	665 (26-3 / 16)	
	Depth	mm (in.)	625 (24-39 / 64)			630 (24-51 / 64)	678 (26-11 / 16)	
Net weight		kg (lbs.)	16 + 2.4 (35.3 + 5.3)			–	–	
Shipping weight		kg (lbs.)	–			19 (41.9)	3.5 (7.7)	
Shipping volume		m^3 (cu.ft)	–			0.13 (4.6)	0.047 (1.7)	

DATA SUBJECT TO CHANGE WITHOUT NOTICE.

Rated conditions
Cooling: Indoor air temperature 27°C DB / 19°C WB; Outdoor air temperature 35°C DB
Heating: Indoor air temperature 20°C DB; Outdoor air temperature 7°C DB / 6°C WB

8. 4-Way Cassette 60×60 Type (Y1 Type)

8-2. Major Component Specifications

Indoor unit (A)

MODEL No.			S-22MY1E5
Power source			220 - 230 - 240 V, single-phase, 50/60 Hz
Controller P.C.B. Ass'y			CR-XM075XH (Microprocessor), POW-XM075XH
Fan (Number...diameter)		mm	Turbo (1...ø322, L147)
Fan motor			
	Model...Nominal output	W	SIC-72FV-D866-1...20 W
	Power source		280 / 340 V (DC) / 3 phase
	No. of pole...r.p.m. (230V, High)	rpm	8P...480
	Coil resistance (Ambient temperature 20°C)	Ω	–
	Run capacitor	VAC, μF	–
Safety device			overcurrent, rotating signal detection, fuse
Electronic expansion valve			
	Coil		UKV-A054
	Coil resistance (at 20°C)	Ω	ORG – GRY : 46 YEL – GRY : 46 RED – GRY : 46 BLK – GRY : 46
	Valve body		UKV-18D31
Heat exchanger			
	Coil		Aluminium plate fin / Copper tube
	Rows...fin pitch	mm	2...1.4
	Face area	m^2	0.27
Panel			
	Model No.		CZ-KPY2
	Auto louver motor		MP24ZN-12V
	Coil resistance (at 25°C)	Ω	380 Ω ± 7% / phase
Drain pump			PLD-12230ST-2
	Rated	V, W	AC 230 V, 50 Hz, 12 W
	Height from unit bottom & capacity		850 mm, 400 cc/min

8. 4-Way Cassette 60×60 Type (Y1 Type)

Indoor unit (B)

MODEL No.			**S-28MY1E5**
Power source			220 - 230 - 240 V, single-phase, 50/60 Hz
Controller P.C.B. Ass'y			CR-XM075XH (Microprocessor), POW-XM075XH
Fan (Number...diameter)		mm	Turbo (1...ø322, L147)
Fan motor			
	Model...Nominal output	W	SIC-72FV-D866-1...20 W
	Power source		280 / 340 V (DC) / 3 phase
	No. of pole...r.p.m. (230V, High)	rpm	8P...480
	Coil resistance (Ambient temperature 20°C)	Ω	–
	Run capacitor	VAC, μF	–
Safety device			overcurrent, rotating signal detection, fuse
Electronic expansion valve			
	Coil		UKV-A054
	Coil resistance (at 20°C)	Ω	ORG – GRY : 46 YEL – GRY : 46 RED – GRY : 46 BLK – GRY : 46
	Valve body		UKV-18D31
Heat exchanger			
	Coil		Aluminium plate fin / Copper tube
	Rows...fin pitch	mm	2...1.4
	Face area	m^2	0.27
Panel			
	Model No.		CZ-KPY2
	Auto louver motor		MP24ZN-12V
	Coil resistance (at 25°C)	Ω	380 Ω ± 7% / phase
Drain pump			PLD-12230ST-2
	Rated	V, W	AC 230 V, 50 Hz, 12 W
	Height from unit bottom & capacity		850 mm, 400 cc/min

4

8. 4-Way Cassette 60×60 Type (Y1 Type)

Indoor unit (C)

MODEL No.			**S-36MY1E5**
Power source			220 - 230 - 240 V, single-phase, 50/60 Hz
Controller P.C.B. Ass'y			CR-XM075XH (Microprocessor), POW-XM075XH
Fan (Number...diameter)		mm	Turbo (1...ø322, L147)
Fan motor			
	Model...Nominal output	W	SIC-72FV-D866-1...20 W
	Power source		280 / 340 V (DC) / 3 phase
	No. of pole...r.p.m. (230V, High)	rpm	8P...540
	Coil resistance (Ambient temperature 20°C)	Ω	–
	Run capacitor	VAC, μF	–
Safety device			overcurrent, rotating signal detection, fuse
Electronic expansion valve			
	Coil		UKV-A054
	Coil resistance (at 20°C)	Ω	ORG – GRY : 46 YEL – GRY : 46 RED – GRY : 46 BLK – GRY : 46
	Valve body		UKV-18D31
Heat exchanger			
	Coil		Aluminium plate fin / Copper tube
	Rows...fin pitch	mm	2...1.4
	Face area	m^2	0.27
Panel			
	Model No.		CZ-KPY2
	Auto louver motor		MP24ZN-12V
	Coil resistance (at 25°C)	Ω	380 Ω ± 7% / phase
Drain pump			PLD-12230ST-2
	Rated	V, W	AC 230 V, 50 Hz, 12 W
	Height from unit bottom & capacity		850 mm, 400 cc/min

8. 4-Way Cassette 60×60 Type (Y1 Type)

Indoor unit (D)

MODEL No.			**S-45MY1E5**
Power source			220 - 230 - 240 V, single-phase, 50/60 Hz
Controller P.C.B. Ass'y			CR-XM075XH (Microprocessor), POW-XM075XH
Fan (Number...diameter)		mm	Turbo (1...ø322, L147)
Fan motor			
	Model...Nominal output	W	SIC-72FV-D866-1...20 W
	Power source		280 / 340 V (DC) / 3 phase
	No. of pole...r.p.m. (230V, High)	rpm	8P...640
	Coil resistance (Ambient temperature 20°C)	Ω	–
	Run capacitor	VAC, μF	–
Safety device			overcurrent, rotating signal detection, fuse
Electronic expansion valve			
	Coil		UKV-A054
	Coil resistance (at 20°C)	Ω	ORG – GRY : 46 YEL – GRY : 46 RED – GRY : 46 BLK – GRY : 46
	Valve body		UKV-25D32
Heat exchanger			
	Coil		Aluminium plate fin / Copper tube
	Rows...fin pitch	mm	2...1.4
	Face area	m^2	0.27
Panel			
	Model No.		CZ-KPY2
	Auto louver motor		MP24ZN-12V
	Coil resistance (at 25°C)	Ω	380 Ω ± 7% / phase
Drain pump			PLD-12230ST-2
	Rated	V, W	AC 230 V, 50 Hz, 12 W
	Height from unit bottom & capacity		850 mm, 400 cc/min

4

8. 4-Way Cassette 60×60 Type (Y1 Type)

Indoor unit (E)

MODEL No.			**S-56MY1E5**
Power source			220 - 230 - 240 V, single-phase, 50/60 Hz
Controller P.C.B. Ass'y			CR-XM075XH (Microprocessor), POW-XM075XH
Fan (Number...diameter)		mm	Turbo (1...ø322, L147)
Fan motor			
	Model...Nominal output	W	SIC-72FV-D866-1...20 W
	Power source		280 / 340 V (DC) / 3 phase
	No. of pole...r.p.m. (230V, High)	rpm	8P...750
	Coil resistance (Ambient temperature 20°C)	Ω	–
	Run capacitor	VAC, μF	–
Safety device			overcurrent, rotating signal detection, fuse
Electronic expansion valve			
	Coil		UKV-A054
	Coil resistance (at 20°C)	Ω	ORG – GRY : 46 YEL – GRY : 46 RED – GRY : 46 BLK – GRY : 46
	Valve body		UKV-25D32
Heat exchanger			
	Coil		Aluminium plate fin / Copper tube
	Rows...fin pitch	mm	2...1.4
	Face area	m^2	0.27
Panel			
	Model No.		CZ-KPY2
	Auto louver motor		MP24ZN-12V
	Coil resistance (at 25°C)	Ω	380 Ω ± 7% / phase
Drain pump			PLD-12230ST-2
	Rated	V, W	AC 230 V, 50 Hz, 12 W
	Height from unit bottom & capacity		850 mm, 400 cc/min

8. 4-Way Cassette 60×60 Type (Y1 Type)

8-3. Dimensional Data

Indoor unit: S-22MY1E5 / 28MY1E5 / 36MY1E5 / 45MY1E5 / 56MY1E5

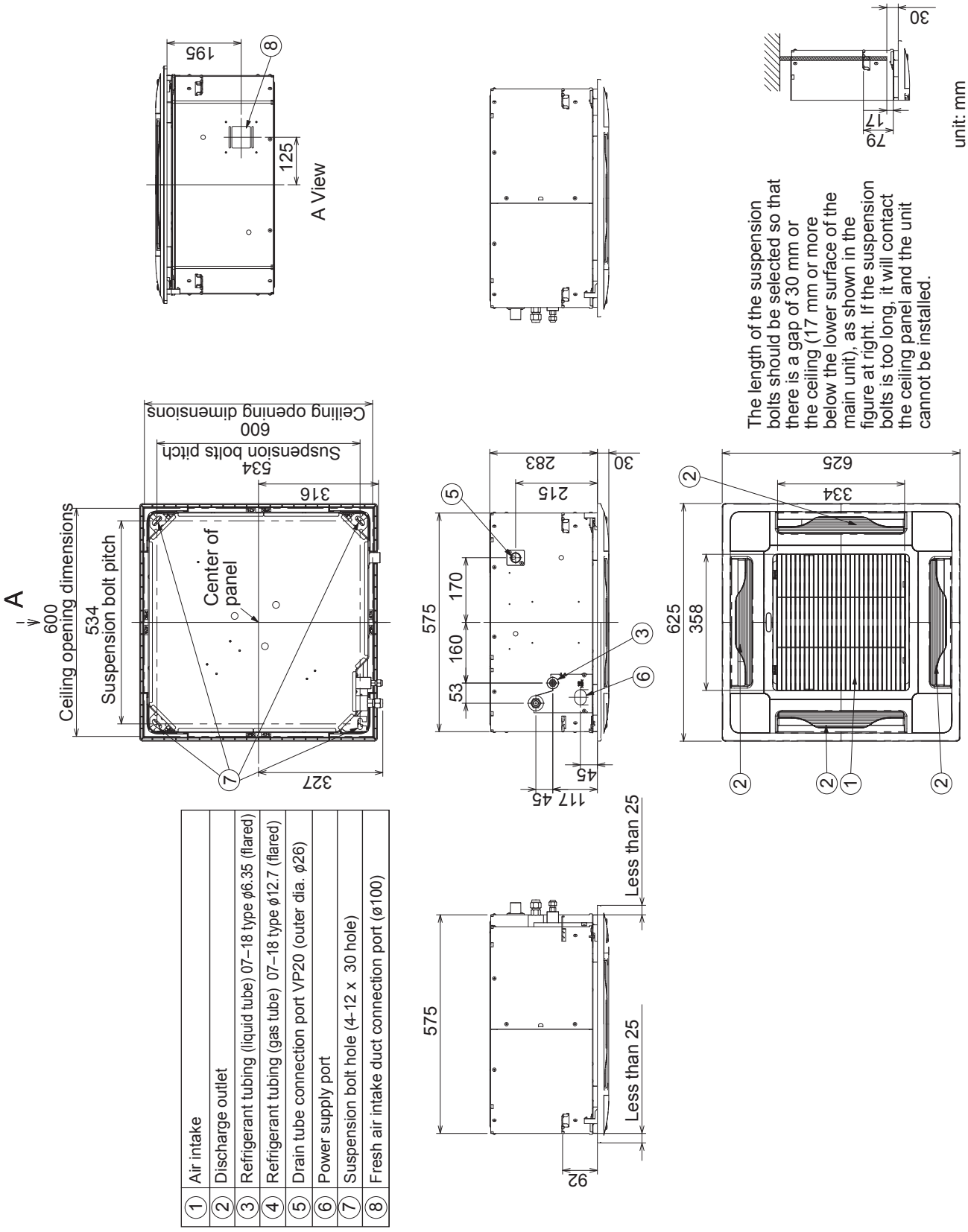

①	Air intake
②	Discharge outlet
③	Refrigerant tubing (liquid tube) 07–18 type ϕ6.35 (flared)
④	Refrigerant tubing (gas tube) 07–18 type ϕ12.7 (flared)
⑤	Drain tube connection port VP20 (outer dia. ϕ26)
⑥	Power supply port
⑦	Suspension bolt hole (4-12 x 30 hole)
⑧	Fresh air intake duct connection port (ø100)

4

8. 4-Way Cassette 60×60 Type (Y1 Type)

8-4. Noise Criterion Curves

Both 50Hz and 60Hz
—●— Strong
—○- - Weak

MODEL : S-22MY1E5 / 28MY1E5
SOUND LEVEL : STRONG 30 dB(A)
WEAK 25 dB(A)
CONDITION : 1.5 m directly below unit

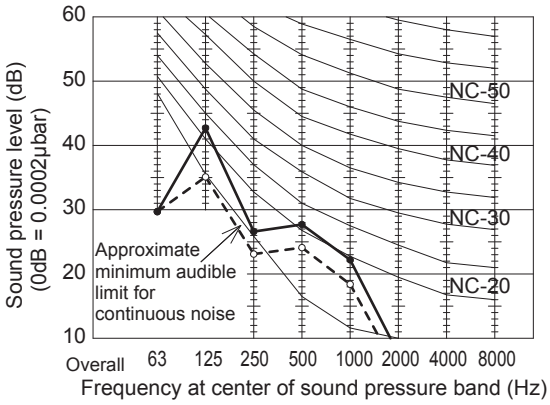

MODEL : S-36MY1E5
SOUND LEVEL : STRONG 32 dB(A)
WEAK 26 dB(A)
CONDITION : 1.5 m directly below unit

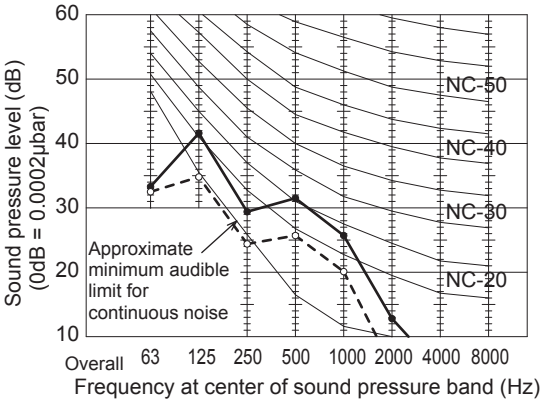

MODEL : S-45MY1E5
SOUND LEVEL : STRONG 36 dB(A)
WEAK 28 dB(A)
CONDITION : 1.5 m directly below unit

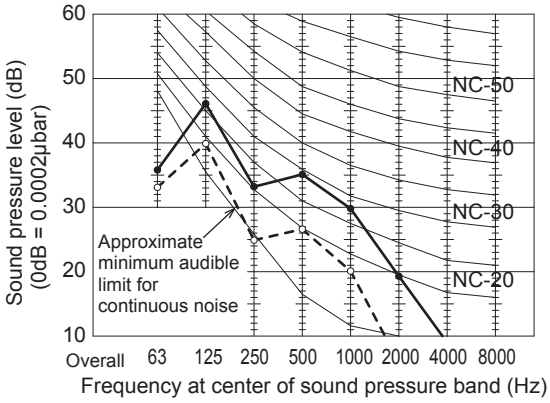

MODEL : S-56MY1E5
SOUND LEVEL : STRONG 41 dB(A)
WEAK 33 dB(A)
CONDITION : 1.5 m directly below unit

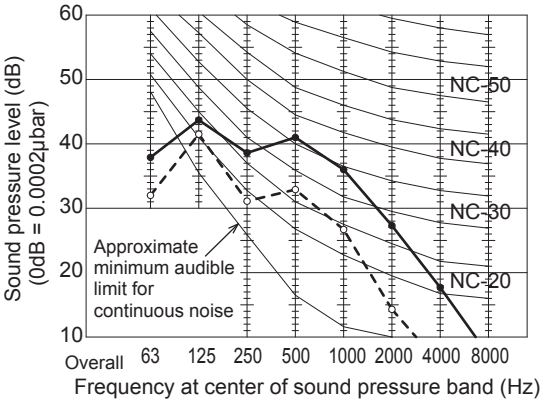

4

8. 4-Way Cassette 60×60 Type (Y1 Type)

8-5. Air Flow Distance / Temperature Chart
S-22MY1E5 / 28MY1E5 / 36MY1E5

Heating : Distribution of wind velocity

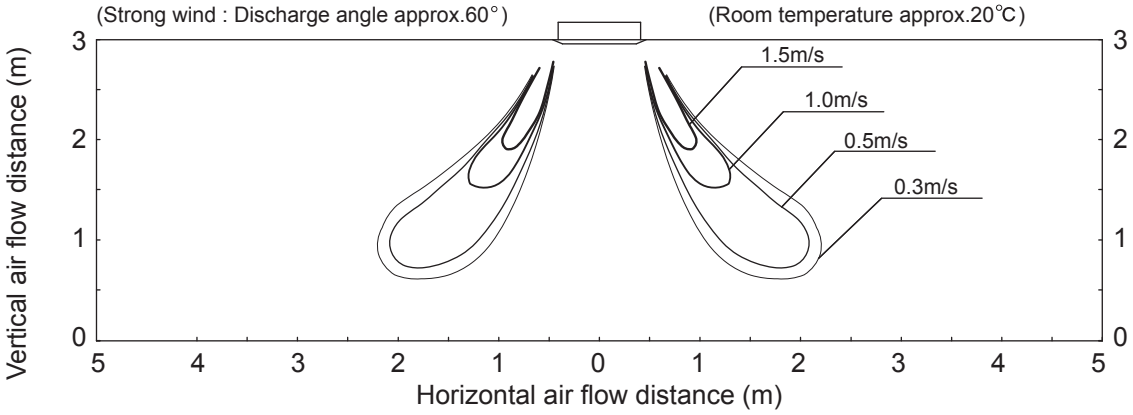

Heating : Distribution of temperature

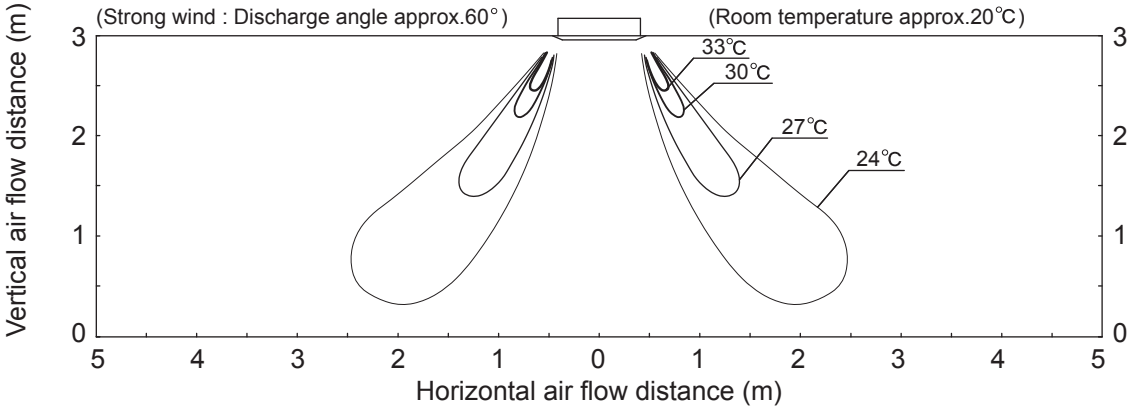

Cooling : Distribution of wind velocity

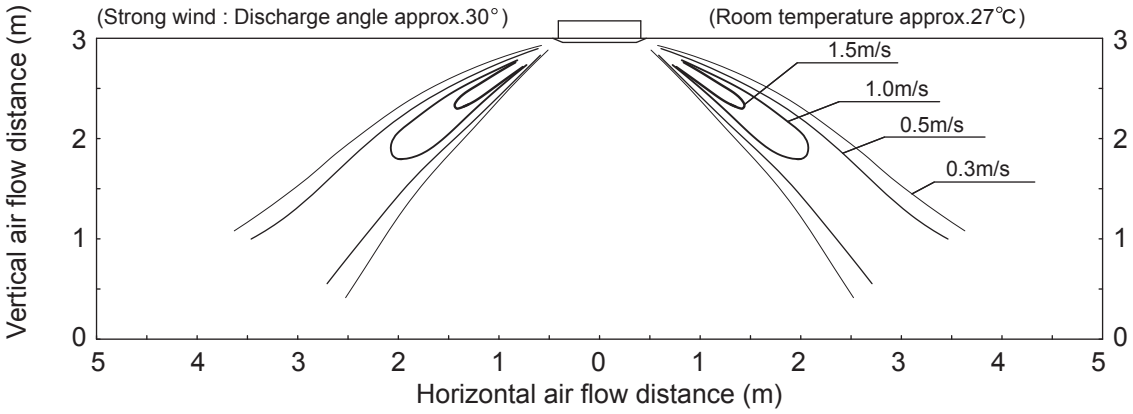

Cooling : Distribution of temperature

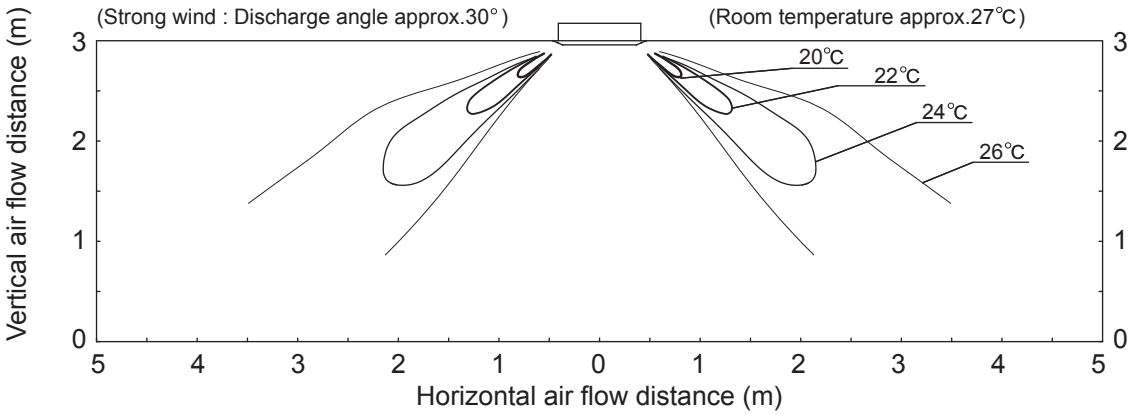

8. 4-Way Cassette 60×60 Type (Y1 Type)

S-45MY1E5 / 56MY1E5

Heating : Distribution of wind velocity

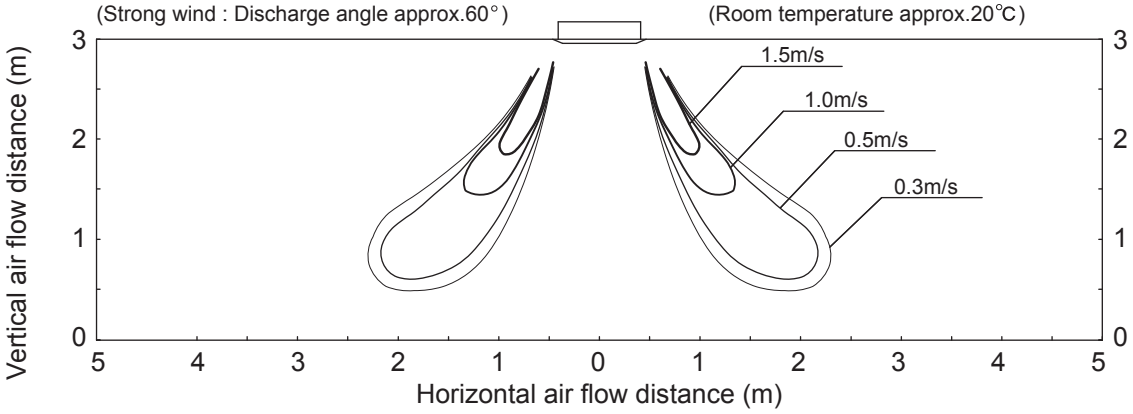

Heating : Distribution of temperature

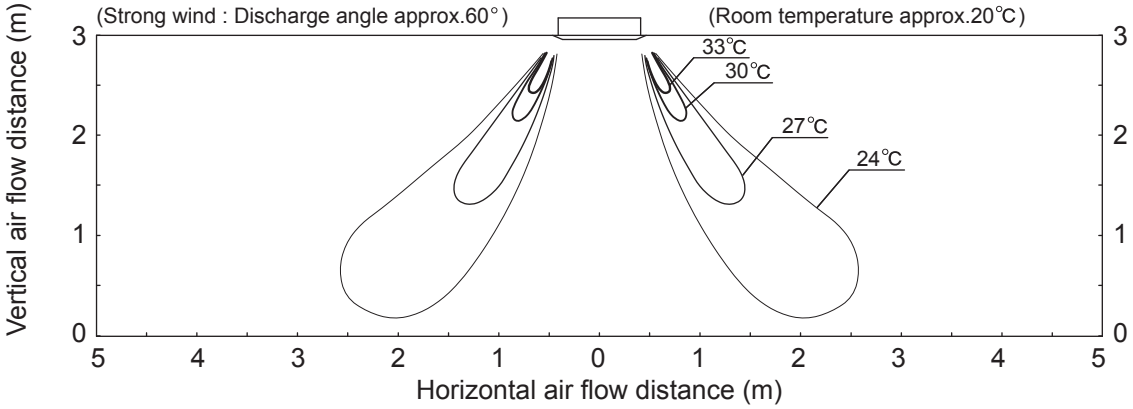

4

Cooling : Distribution of wind velocity

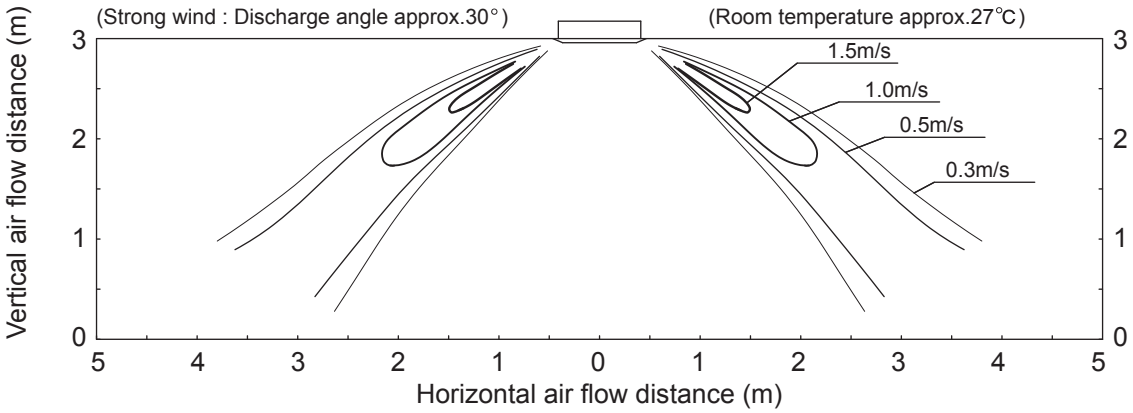

Cooling : Distribution of temperature

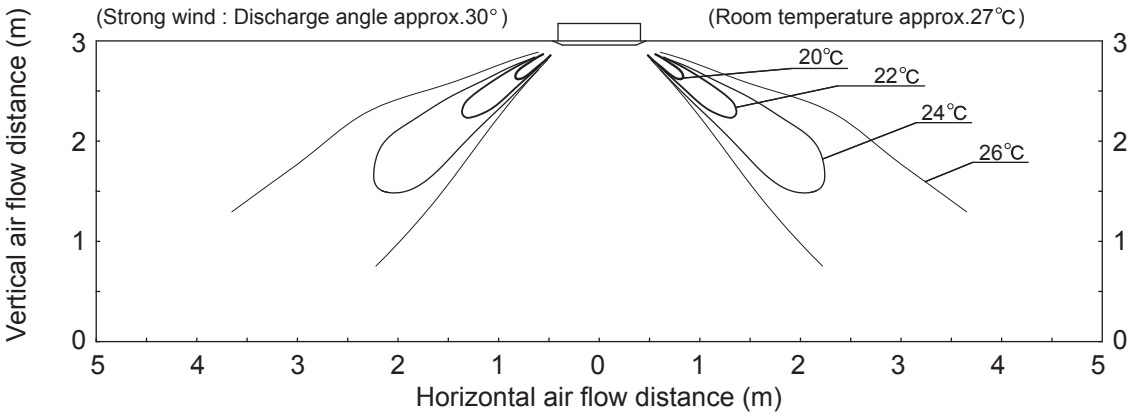

9. 2-Way Cassette Type (L1 Type)

9-1. Specifications

Unit specifications (A)

MODEL No.	Indoor Unit		S-22ML1E5					
POWER SOURCE			220 - 230 - 240 V, single-phase, 50/60 Hz					
PERFORMANCE			Cooling			Heating		
Capacity		kW	2.2			2.5		
		BTU / h	7,500			8,500		
Air circulation (Hi / Me / Lo)		m^3 / h	480 / 420 / 360					
Moisture removal (High)		Liters / h	0.5			–		
ELECTRICAL RATINGS								
Voltage rating		V	220	230	240	220	230	240
Available voltage range		V	198 - 264			198 - 264		
Running amperes		A	0.45	0.45	0.45	0.29	0.29	0.30
Power input		W	86	90	95	55	58	62
Power factor		%	87	87	88	86	87	86
Max. starting amperes		A	1	1	1	1	1	1
FEATURES								
Controls			Microprocessor					
Timer			ON / OFF Timer (Max. 72 h)					
Fan speeds			3 and Automatic control					
Airflow direction			Automatic (Remote control)					
Air filter			Washable, easy access, long life (2,500 h)					
Refrigerant control			Electronic expansion valve					
Operation sound (Hi / Me / Lo)		dB-A	30 / 27 / 24					
Refrigerant tubing connections			Flare type					
Refrigerant tube diameter	Liquid tube	mm (in.)	6.35 (1 / 4)					
	Gas tube	mm (in.)	12.7 (1 / 2)					
Drain connection			25 A, OD32 mm					
Drain pump			Max. head 500 mm above drain connection					
Panel			Optional (CZ-02KPL2)					
Remote controller			Optional (Wired / Wireless)					
Refrigerant tubing kit / Accessories			Optional / –					
Color (Approximate value)			Munsell 10Y 9.3 / 0.4, RAL 9010-GL					
DIMENSIONS & WEIGHT			Indoor unit (including panel)			Package		
						Body	Panel	
Unit dimensions	Height	mm (in.)	358 (14-3 / 32)			310 (12-7 / 32)	165 (6-1 / 2)	
	Width	mm (in.)	1060 (41-23 / 32)			1082 (42-19 / 32)	1147 (45-5 / 32)	
	Depth	mm (in.)	680 (26-25 / 32)			658 (25-29 / 32)	789 (31-1 / 16)	
Net weight		kg (lbs.)	23 + 5.5 (50.7 + 12.1)			–	–	
Shipping weight		kg (lbs.)	–			26 (57)	8 (18)	
Shipping volume		m^3 (cu.ft)	–			0.221 (7.8)	0.149 (5.3)	

DATA SUBJECT TO CHANGE WITHOUT NOTICE.

Rated conditions
Cooling: Indoor air temperature 27°C DB / 19°C WB; Outdoor air temperature 35°C DB
Heating: Indoor air temperature 20°C DB; Outdoor air temperature 7°C DB / 6°C WB

9. 2-Way Cassette Type (L1 Type)

Unit specifications (B)

MODEL No.	Indoor Unit		S-28ML1E5					
POWER SOURCE			220 - 230 - 240 V, single-phase, 50/60 Hz					
PERFORMANCE			Cooling			Heating		
Capacity		kW	2.8			3.2		
		BTU / h	9,600			11,000		
Air circulation (Hi / Me / Lo)		m^3 / h	540 / 480 / 420					
Moisture removal (High)		Liters / h	1.0			–		
ELECTRICAL RATINGS								
Voltage rating		V	220	230	240	220	230	240
Available voltage range		V	198 - 264			198 - 264		
Running amperes		A	0.44	0.45	0.45	0.28	0.29	0.30
Power input		W	86	92	97	55	60	64
Power factor		%	89	89	90	89	90	89
Max. starting amperes		A	1	1	1	1	1	1
FEATURES								
Controls			Microprocessor					
Timer			ON / OFF Timer (Max. 72 h)					
Fan speeds			3 and Automatic control					
Airflow direction			Automatic (Remote control)					
Air filter			Washable, easy access, long life (2,500 h)					
Refrigerant control			Electronic expansion valve					
Operation sound (Hi / Me / Lo)		dB-A	33 / 29 / 26					
Refrigerant tubing connections			Flare type					
Refrigerant tube diameter	Liquid tube	mm (in.)	6.35 (1 / 4)					
	Gas tube	mm (in.)	12.7 (1 / 2)					
Drain connection			25 A, OD32 mm					
Drain pump			Max. head 500 mm above drain connection					
Panel			Optional (CZ-02KPL2)					
Remote controller			Optional (Wired / Wireless)					
Refrigerant tubing kit / Accessories			Optional / –					
Color (Approximate value)			Munsell 10Y 9.3 / 0.4, RAL 9010-GL					
DIMENSIONS & WEIGHT			Indoor unit (including panel)			Package		
						Body	Panel	
Unit dimensions	Height	mm (in.)	358 (14-3 / 32)			310 (12-7 / 32)	165 (6-1 / 2)	
	Width	mm (in.)	1060 (41-23 / 32)			1082 (42-19 / 32)	1147 (45-5 / 32)	
	Depth	mm (in.)	680 (26-25 / 32)			658 (25-29 / 32)	789 (31-1 / 16)	
Net weight		kg (lbs.)	23 + 5.5 (50.7 + 12.1)			–	–	
Shipping weight		kg (lbs.)	–			26 (57)	8 (18)	
Shipping volume		m^3 (cu.ft)	–			0.221 (7.8)	0.149 (5.3)	

DATA SUBJECT TO CHANGE WITHOUT NOTICE.

Rated conditions
Cooling: Indoor air temperature 27°C DB / 19°C WB; Outdoor air temperature 35°C DB
Heating: Indoor air temperature 20°C DB; Outdoor air temperature 7°C DB / 6°C WB

9. 2-Way Cassette Type (L1 Type)

Unit specifications (C)

MODEL No.	Indoor Unit		S-36ML1E5					
POWER SOURCE			220 - 230 - 240 V, single-phase, 50/60 Hz					
PERFORMANCE			Cooling			Heating		
Capacity		kW	3.6			4.2		
		BTU / h	12,000			14,000		
Air circulation (Hi / Me / Lo)		m^3 / h	580 / 520 / 460					
Moisture removal (High)		Liters / h	1.6			–		
ELECTRICAL RATINGS								
Voltage rating		V	220	230	240	220	230	240
Available voltage range		V	198 - 264			198 - 264		
Running amperes		A	0.44	0.45	0.45	0.28	0.29	0.30
Power input		W	88	93	99	57	61	66
Power factor		%	91	90	92	93	91	92
Max. starting amperes		A	1	1	1	1	1	1
FEATURES								
Controls			Microprocessor					
Timer			ON / OFF Timer (Max. 72 h)					
Fan speeds			3 and Automatic control					
Airflow direction			Automatic (Remote control)					
Air filter			Washable, easy access, long life (2,500 h)					
Refrigerant control			Electronic expansion valve					
Operation sound (Hi / Me / Lo)		dB-A	34 / 31 / 28					
Refrigerant tubing connections			Flare type					
Refrigerant tube diameter	Liquid tube	mm (in.)	6.35 (1 / 4)					
	Gas tube	mm (in.)	12.7 (1 / 2)					
Drain connection			25 A, OD32 mm					
Drain pump			Max. head 500 mm above drain connection					
Panel			Optional (CZ-02KPL2)					
Remote controller			Optional (Wired / Wireless)					
Refrigerant tubing kit / Accessories			Optional / –					
Color (Approximate value)			Munsell 10Y 9.3 / 0.4, RAL 9010-GL					
DIMENSIONS & WEIGHT			Indoor unit (including panel)			Package		
						Body	Panel	
Unit dimensions	Height	mm (in.)	358 (14-3 / 32)			310 (12-7 / 32)	165 (6-1 / 2)	
	Width	mm (in.)	1060 (41-23 / 32)			1082 (42-19 / 32)	1147 (45-5 / 32)	
	Depth	mm (in.)	680 (26-25 / 32)			658 (25-29 / 32)	789 (31-1 / 16)	
Net weight		kg (lbs.)	23 + 5.5 (50.7 + 12.1)			–	–	
Shipping weight		kg (lbs.)	–			26 (57)	8 (18)	
Shipping volume		m^3 (cu.ft)	–			0.221 (7.8)	0.149 (5.3)	

DATA SUBJECT TO CHANGE WITHOUT NOTICE.

Rated conditions
Cooling: Indoor air temperature 27°C DB / 19°C WB; Outdoor air temperature 35°C DB
Heating: Indoor air temperature 20°C DB; Outdoor air temperature 7°C DB / 6°C WB

9. 2-Way Cassette Type (L1 Type)

Unit specifications (D)

MODEL No.	Indoor Unit		S-45ML1E5					
POWER SOURCE			220 - 230 - 240 V, single-phase, 50/60 Hz					
PERFORMANCE			Cooling			Heating		
Capacity		kW	4.5			5.0		
		BTU / h	15,000			17,000		
Air circulation (Hi / Me / Lo)		m^3 / h	660 / 540 / 480					
Moisture removal (High)		Liters / h	2.4			–		
ELECTRICAL RATINGS								
Voltage rating		V	220	230	240	220	230	240
Available voltage range		V	198 - 264			198 - 264		
Running amperes		A	0.45	0.45	0.45	0.29	0.29	0.30
Power input		W	91	97	103	60	65	70
Power factor		%	92	94	95	94	97	97
Max. starting amperes		A	1	1	1	1	1	1
FEATURES								
Controls			Microprocessor					
Timer			ON / OFF Timer (Max. 72 h)					
Fan speeds			3 and Automatic control					
Airflow direction			Automatic (Remote control)					
Air filter			Washable, easy access, long life (2,500 h)					
Refrigerant control			Electronic expansion valve					
Operation sound (Hi / Me / Lo)		dB-A	35 / 33 / 29					
Refrigerant tubing connections			Flare type					
Refrigerant tube diameter	Liquid tube	mm (in.)	6.35 (1 / 4)					
	Gas tube	mm (in.)	12.7 (1 / 2)					
Drain connection			25 A, OD32 mm					
Drain pump			Max. head 500 mm above drain connection					
Panel			Optional (CZ-02KPL2)					
Remote controller			Optional (Wired / Wireless)					
Refrigerant tubing kit / Accessories			Optional / –					
Color (Approximate value)			Munsell 10Y 9.3 / 0.4, RAL 9010-GL					
DIMENSIONS & WEIGHT			Indoor unit (including panel)			Package		
						Body	Panel	
Unit dimensions	Height	mm (in.)	358 (14-3 / 32)			310 (12-7 / 32)	165 (6-1 / 2)	
	Width	mm (in.)	1060 (41-23 / 32)			1082 (42-19 / 32)	1147 (45-5 / 32)	
	Depth	mm (in.)	680 (26-25 / 32)			658 (25-29 / 32)	789 (31-1 / 16)	
Net weight		kg (lbs.)	23 + 5.5 (50.7 + 12.1)			–	–	
Shipping weight		kg (lbs.)	–			26 (57)	8 (18)	
Shipping volume		m^3 (cu.ft)	–			0.221 (7.8)	0.149 (5.3)	

DATA SUBJECT TO CHANGE WITHOUT NOTICE.

Rated conditions
Cooling: Indoor air temperature 27°C DB / 19°C WB; Outdoor air temperature 35°C DB
Heating: Indoor air temperature 20°C DB; Outdoor air temperature 7°C DB / 6°C WB

9. 2-Way Cassette Type (L1 Type)

Unit specifications (E)

MODEL No.	Indoor Unit		S-56ML1E5					
POWER SOURCE			220 - 230 - 240 V, single-phase, 50/60 Hz					
PERFORMANCE			Cooling			Heating		
Capacity		kW	5.6			6.3		
		BTU / h	19,000			21,000		
Air circulation (Hi / Me / Lo)		m^3 / h	660 / 540 / 480					
Moisture removal (High)		Liters / h	2.4			–		
ELECTRICAL RATINGS								
Voltage rating		V	220	230	240	220	230	240
Available voltage range		V	198 - 264			198 - 264		
Running amperes		A	0.45	0.45	0.45	0.29	0.29	0.30
Power input		W	91	97	103	60	65	70
Power factor		%	92	94	95	94	97	97
Max. starting amperes		A	1	1	1	1	1	1
FEATURES								
Controls			Microprocessor					
Timer			ON / OFF Timer (Max. 72 h)					
Fan speeds			3 and Automatic control					
Airflow direction			Automatic (Remote control)					
Air filter			Washable, easy access, long life (2,500 h)					
Refrigerant control			Electronic expansion valve					
Operation sound (Hi / Me / Lo)		dB-A	35 / 33 / 29					
Refrigerant tubing connections			Flare type					
Refrigerant tube diameter	Liquid tube	mm (in.)	6.35 (1 / 4)					
	Gas tube	mm (in.)	12.7 (1 / 2)					
Drain connection			25 A, OD32 mm					
Drain pump			Max. head 500 mm above drain connection					
Panel			Optional (CZ-02KPL2)					
Remote controller			Optional (Wired / Wireless)					
Refrigerant tubing kit / Accessories			Optional / –					
Color (Approximate value)			Munsell 10Y 9.3 / 0.4, RAL 9010-GL					
DIMENSIONS & WEIGHT			Indoor unit (including panel)			Package		
						Body	Panel	
Unit dimensions	Height	mm (in.)	358 (14-3 / 32)			310 (12-7 / 32)	165 (6-1 / 2)	
	Width	mm (in.)	1060 (41-23 / 32)			1082 (42-19 / 32)	1147 (45-5 / 32)	
	Depth	mm (in.)	680 (26-25 / 32)			658 (25-29 / 32)	789 (31-1 / 16)	
Net weight		kg (lbs.)	23 + 5.5 (50.7 + 12.1)			–	–	
Shipping weight		kg (lbs.)	–			26 (57)	8 (18)	
Shipping volume		m^3 (cu.ft)	–			0.221 (7.8)	0.149 (5.3)	

DATA SUBJECT TO CHANGE WITHOUT NOTICE.

Rated conditions
Cooling: Indoor air temperature 27°C DB / 19°C WB; Outdoor air temperature 35°C DB
Heating: Indoor air temperature 20°C DB; Outdoor air temperature 7°C DB / 6°C WB

9. 2-Way Cassette Type (L1 Type)

Unit specifications (F)

MODEL No.	Indoor Unit		S-73ML1E5					
POWER SOURCE			220 - 230 - 240 V, single-phase, 50/60 Hz					
PERFORMANCE			Cooling			Heating		
Capacity		kW	7.3			8.0		
		BTU / h	25,000			27,000		
Air circulation (Hi / Me / Lo)		m^3 / h	1,140 / 960 / 840					
Moisture removal (High)		Liters / h	3.5			–		
ELECTRICAL RATINGS								
Voltage rating		V	220	230	240	220	230	240
Available voltage range		V	198 - 264			198 - 264		
Running amperes		A	0.64	0.65	0.66	0.46	0.48	0.49
Power input		W	135	145	154	100	109	117
Power factor		%	96	94	97	99	99	99
Max. starting amperes		A	1	1	1	1	1	1
FEATURES								
Controls			Microprocessor					
Timer			ON / OFF Timer (Max. 72 h)					
Fan speeds			3 and Automatic control					
Airflow direction			Automatic (Remote control)					
Air filter			Washable, easy access, long life (2,500 h)					
Refrigerant control			Electronic expansion valve					
Operation sound (Hi / Me / Lo)		dB-A	38 / 35 / 33					
Refrigerant tubing connections			Flare type					
Refrigerant tube diameter	Liquid tube	mm (in.)	9.52 (3 / 8)					
	Gas tube	mm (in.)	15.88 (5 / 8)					
Drain connection			25 A, OD32 mm					
Drain pump			Max. head 500 mm above drain connection					
Panel			Optional (CZ-03KPL2)					
Remote controller			Optional (Wired / Wireless)					
Refrigerant tubing kit / Accessories			Optional / –					
Color (Approximate value)			Munsell 10Y 9.3 / 0.4, RAL 9010-GL					
DIMENSIONS & WEIGHT			Indoor unit (including panel)			Package		
						Body	Panel	
Unit dimensions	Height	mm (in.)	358 (14-3 / 32)			310 (12-7 / 32)	165 (6-1 / 2)	
	Width	mm (in.)	1360 (53-17 / 32)			1382 (54-13 / 32)	1447 (56-31 / 32)	
	Depth	mm (in.)	680 (26-25 / 32)			658 (25-29 / 32)	789 (31-1 / 16)	
Net weight		kg (lbs.)	30 + 9 (66 + 20)			–	–	
Shipping weight		kg (lbs.)	–			23 + 5.5 (50.7 + 12.1)	13 (29)	
Shipping volume		m^3 (cu.ft)	–			0.282 (10.0)	0.188 (6.7)	

DATA SUBJECT TO CHANGE WITHOUT NOTICE.

Rated conditions
Cooling: Indoor air temperature 27°C DB / 19°C WB; Outdoor air temperature 35°C DB
Heating: Indoor air temperature 20°C DB; Outdoor air temperature 7°C DB / 6°C WB

9. 2-Way Cassette Type (L1 Type)

9-2. Major Component Specifications

Indoor unit (A)

MODEL No.			S-22ML1E5
Power source			220 - 230 - 240 V, single-phase, 50/60 Hz
Controller P.C.B. Ass'y			CR-UXRP71B-PE (Microprocessor)
Fan (Number...diameter)		mm	Centrifugal (1...ø190)
Fan motor			
	Model...Nominal output	W	UF4X-31C3P...30 W
	Power source		220 - 230 - 240 V / single-phase / 50 Hz
	No. of pole...r.p.m. (230V, High)	rpm	4P... 640
	Coil resistance (Ambient temperature 20°C)	Ω	BRN – WHT : 138.0 ORG – YEL : 25.58 WHT – VLT : 18.55 YEL – BLK : 49.31 VLT – ORG : 35.03 BLK – PNK : 84.18
	Safety device		
	Operating temperature	Open °C	130 ± 5
		Close °C	(115 ± 5)
	Run capacitor	VAC, μF	440 VAC, 0.8 μF
Electronic expansion valve			
	Coil		UKV-U030E
	Coil resistance (at 20°C)	Ω	ORG – GRY : 46 YEL – GRY : 46 RED – GRY : 46 BLK – GRY : 46
	Valve body		UKV-18D31
Heat exchanger			
	Coil		Aluminium plate fin / Copper tube
	Rows...fin pitch	mm	2...1.5
	Face area	m^2	0.255
Panel			
	Model No.		CZ-02KPL2
	Auto louver motor		MT8-3C
	Auto louver motor... Rated	VAC, W, rpm	200 ~ 240 VAC, 3 W, 2.5 rpm
	Coil resistance (at 25°C)	Ω	16,430 Ω ± 8 %
Drain pump			ADP-1408
	Rated	V, W	AC 230 V, 50 Hz, 12 W
	Height from unit bottom & capacity		500 mm, 400 cc/min

4

9. 2-Way Cassette Type (L1 Type)

Indoor unit (B)

MODEL No.			**S-28ML1E5**
Power source			220 - 230 - 240 V, single-phase, 50/60 Hz
Controller P.C.B. Ass'y			CR-UXRP71B-PE (Microprocessor)
Fan (Number...diameter)		mm	Centrifugal (1...ø190)
Fan motor			
	Model...Nominal output	W	UF4X-31C3P...30 W
	Power source		220 - 230 - 240 V / single-phase / 50 Hz
	No. of pole...r.p.m. (230V, High)	rpm	4P... 708
	Coil resistance (Ambient temperature 20°C)	Ω	BRN – WHT : 138.0 ORG – YEL : 25.58 WHT – VLT : 18.55 YEL – BLK : 49.31 VLT – ORG : 35.03 BLK – PNK : 84.18
	Safety device		
	Operating temperature	Open °C	130 ± 5
		Close °C	(115 ± 5)
	Run capacitor	VAC, μF	440 VAC, 1.0 μF
Electronic expansion valve			
	Coil		UKV-U030E
	Coil resistance (at 20°C)	Ω	ORG – GRY : 46 YEL – GRY : 46 RED – GRY : 46 BLK – GRY : 46
	Valve body		UKV-18D31
Heat exchanger			
	Coil		Aluminium plate fin / Copper tube
	Rows...fin pitch	mm	2...1.5
	Face area	m^2	0.255
Panel			
	Model No.		CZ-02KPL2
	Auto louver motor		MT8-3C
	Auto louver motor... Rated	VAC, W, rpm	200 ~ 240 VAC, 3 W, 2.5 rpm
	Coil resistance (at 25°C)	Ω	16,430 Ω ± 8 %
Drain pump			ADP-1408
	Rated	V, W	AC 230 V, 50 Hz, 12 W
	Height from unit bottom & capacity		500 mm, 400 cc/min

9. 2-Way Cassette Type (L1 Type)

Indoor unit (C)

MODEL No.			**S-36ML1E5**
Power source			220 - 230 - 240 V, single-phase, 50/60 Hz
Controller P.C.B. Ass'y			CR-UXRP71B-PE (Microprocessor)
Fan (Number...diameter)		mm	Centrifugal (1...ø190)
Fan motor			
	Model...Nominal output	W	UF4X-31C3P...30 W
	Power source		220 - 230 - 240 V / single-phase / 50 Hz
	No. of pole...r.p.m. (230V, High)	rpm	4P... 760
	Coil resistance (Ambient temperature 20°C)	Ω	BRN – WHT : 138.0 WHT – VLT : 18.55 VLT – ORG : 35.03 ORG – YEL : 25.58 YEL – BLK : 49.31 BLK – PNK : 84.18
	Safety device		
	Operating temperature	Open °C	130 ± 5
		Close °C	(115 ± 5)
	Run capacitor	VAC, μF	440 VAC, 1.2 μF
Electronic expansion valve			
	Coil		UKV-U030E
	Coil resistance (at 20°C)	Ω	ORG – GRY : 46 RED – GRY : 46 YEL – GRY : 46 BLK – GRY : 46
	Valve body		UKV-18D31
Heat exchanger			
	Coil		Aluminium plate fin / Copper tube
	Rows...fin pitch	mm	2...1.5
	Face area	m^2	0.255
Panel			
	Model No.		CZ-02KPL2
	Auto louver motor		MT8-3C
	Auto louver motor... Rated	VAC, W, rpm	200 ~ 240 VAC, 3 W, 2.5 rpm
	Coil resistance (at 25°C)	Ω	16,430 Ω ± 8 %
Drain pump			ADP-1408
	Rated	V, W	AC 230 V, 50 Hz, 12 W
	Height from unit bottom & capacity		500 mm, 400 cc/min

9. 2-Way Cassette Type (L1 Type)

Indoor unit (D)

MODEL No.			**S-45ML1E5**
Power source			220 - 230 - 240 V, single-phase, 50/60 Hz
Controller P.C.B. Ass'y			CR-UXRP71B-PE (Microprocessor)
Fan (Number...diameter)		mm	Centrifugal (1...ø190)
Fan motor			
	Model...Nominal output	W	UF4X-31C3P...30 W
	Power source		220 - 230 - 240 V / single-phase / 50 Hz
	No. of pole...r.p.m. (230V, High)	rpm	4P... 834
	Coil resistance (Ambient temperature 20°C)	Ω	BRN – WHT : 138.0 ORG – YEL : 25.58 WHT – VLT : 18.55 YEL – BLK : 49.31 VLT – ORG : 35.03 BLK – PNK : 84.18
	Safety device		
	Operating temperature	Open °C	130 ± 5
		Close °C	(115 ± 5)
	Run capacitor	VAC, μF	440 VAC, 1.5 μF
Electronic expansion valve			
	Coil		UKV-U030E
	Coil resistance (at 20°C)	Ω	ORG – GRY : 46 YEL – GRY : 46 RED – GRY : 46 BLK – GRY : 46
	Valve body		UKV-25D32
Heat exchanger			
	Coil		Aluminium plate fin / Copper tube
	Rows...fin pitch	mm	2...1.5
	Face area	m^2	0.255
Panel			
	Model No.		CZ-02KPL2
	Auto louver motor		MT8-3C
	Auto louver motor... Rated	VAC, W, rpm	200 ~ 240 VAC, 3 W, 2.5 rpm
	Coil resistance (at 25°C)	Ω	16,430 Ω ± 8 %
Drain pump			ADP-1408
	Rated	V, W	AC 230 V, 50 Hz, 12 W
	Height from unit bottom & capacity		500 mm, 400 cc/min

9. 2-Way Cassette Type (L1 Type)

Indoor unit (E)

MODEL No.			**S-56ML1E5**
Power source			220 - 230 - 240 V, single-phase, 50/60 Hz
Controller P.C.B. Ass'y			CR-UXRP71B-PE (Microprocessor)
Fan (Number...diameter)		mm	Centrifugal (1...ø190)
Fan motor			
	Model...Nominal output	W	UF4X-31C3P...30 W
	Power source		220 - 230 - 240 V / single-phase / 50 Hz
	No. of pole...r.p.m. (230V, High)	rpm	4P... 834
	Coil resistance (Ambient temperature 20°C)	Ω	BRN – WHT : 138.0 WHT – VLT : 18.55 VLT – ORG : 35.03 ORG – YEL : 25.58 YEL – BLK : 49.31 BLK – PNK : 84.18
	Safety device		
	Operating temperature	Open °C	130 ± 5
		Close °C	(115 ± 5)
	Run capacitor	VAC, μF	440 VAC, 1.5 μF
Electronic expansion valve			
	Coil		UKV-U030E
	Coil resistance (at 20°C)	Ω	ORG – GRY : 46 RED – GRY : 46 YEL – GRY : 46 BLK – GRY : 46
	Valve body		UKV-25D32
Heat exchanger			
	Coil		Aluminium plate fin / Copper tube
	Rows...fin pitch	mm	2...1.5
	Face area	m^2	0.255
Panel			
	Model No.		CZ-02KPL2
	Auto louver motor		MT8-3C
	Auto louver motor... Rated	VAC, W, rpm	200 ~ 240 VAC, 3 W, 2.5 rpm
	Coil resistance (at 25°C)	Ω	16,430 Ω ± 8 %
Drain pump			ADP-1408
	Rated	V, W	AC 230 V, 50 Hz, 12 W
	Height from unit bottom & capacity		500 mm, 400 cc/min

4

9. 2-Way Cassette Type (L1 Type)

Indoor unit (F)

MODEL No.			**S-73ML1E5**
Power source			220 - 230 - 240 V, single-phase, 50/60 Hz
Controller P.C.B. Ass'y			CR-UXRP71B-PE (Microprocessor)
Fan (Number...diameter)		mm	Centrifugal (2...ø190)
Fan motor			
	Model...Nominal output	W	KFG4X-51F3P...50 W
	Power source		220 - 230 - 240 V / single-phase / 50 Hz
	No. of pole...r.p.m. (230V, High)	rpm	4P... 834
	Coil resistance (Ambient temperature 20°C)	Ω	BRN – WHT : 71.63 WHT – VLT : 10.84 VLT – ORG : 14.31 ORG – YEL : 10.94 YEL – BLK : 28.73 BLK – PNK : 14.94
	Safety device		
	Operating temperature	Open °C	130 ± 5
		Close °C	(115 ± 5)
	Run capacitor	VAC, μF	440 VAC, 3.0 μF
Electronic expansion valve			
	Coil		UKV-U030E
	Coil resistance (at 20°C)	Ω	ORG – GRY : 46 RED – GRY : 46 YEL – GRY : 46 BLK – GRY : 46
	Valve body		UKV-25D32
Heat exchanger			
	Coil		Aluminium plate fin / Copper tube
	Rows...fin pitch	mm	2...1.5
	Face area	m^2	0.381
Panel			
	Model No.		CZ-03KPL2
	Auto louver motor		MT8-3C
	Auto louver motor... Rated	VAC, W, rpm	200 ~ 240 VAC, 3 W, 2.5 rpm
	Coil resistance (at 25°C)	Ω	16,430 Ω ± 8 %
Drain pump			ADP-1408
	Rated	V, W	AC 230 V, 50 Hz, 12 W
	Height from unit bottom & capacity		500 mm, 400 cc/min

9. 2-Way Cassette Type (L1 Type)

9-3. Dimensional Data

Indoor unit: S-22ML1E5 / 28ML1E5 / 36ML1E5 / 45ML1E5 / 56ML1E5

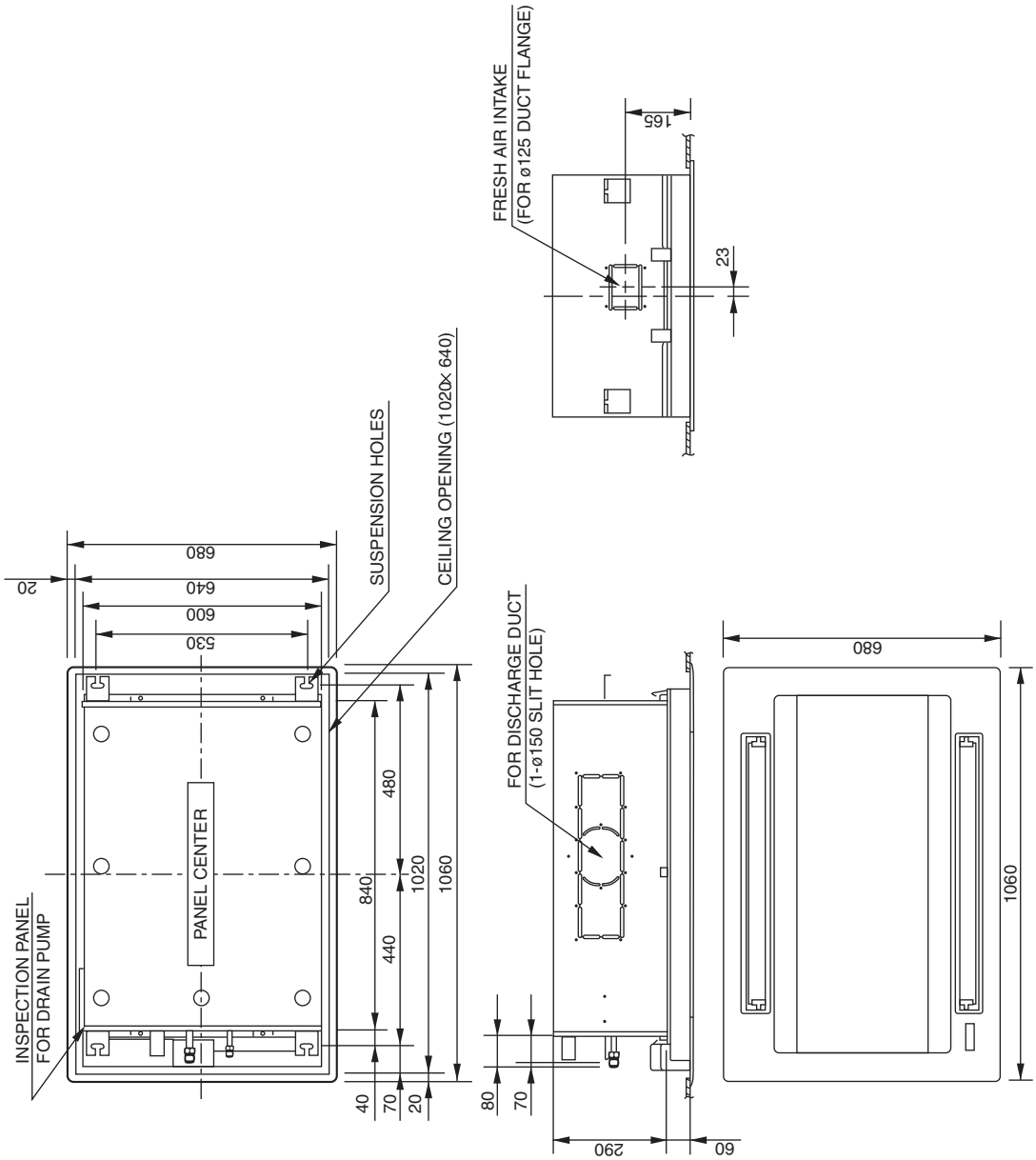

① Refrigerant liquid line (ø6.35)
② Refrigerant gas line (ø12.7)
③ Drain connection (25 A. O.D. 32 mm)
④ Power supply entry

unit: mm

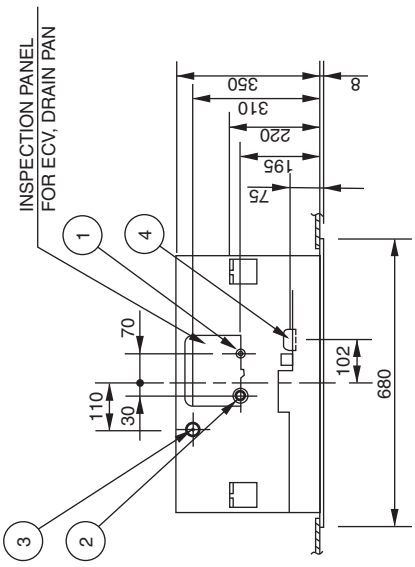

9. 2-Way Cassette Type (L1 Type)

Indoor unit: S-73ML1E5

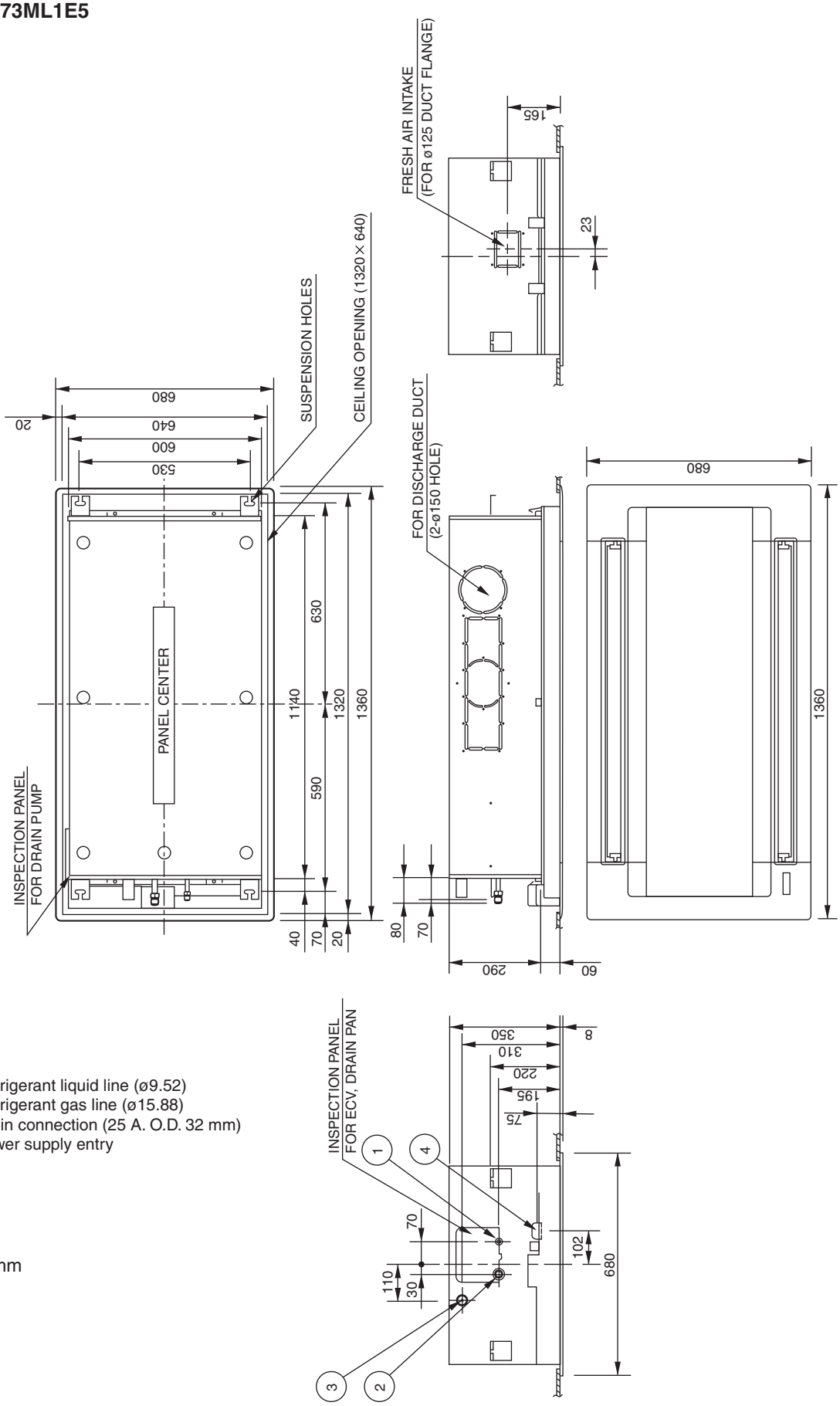

① Refrigerant liquid line (ø9.52)
② Refrigerant gas line (ø15.88)
③ Drain connection (25 A. O.D. 32 mm)
④ Power supply entry

unit: mm

9. 2-Way Cassette Type (L1 Type)

9-4. Noise Criterion Curves

Both 50Hz and 60Hz
—●— Strong
— ○- - Weak

MODEL	: S-22ML1E5	
SOUND LEVEL	: STRONG	30 dB(A)
	HIGH	27 dB(A)
	LOW	24 dB(A)
CONDITION	: 1.5 m directly below unit	

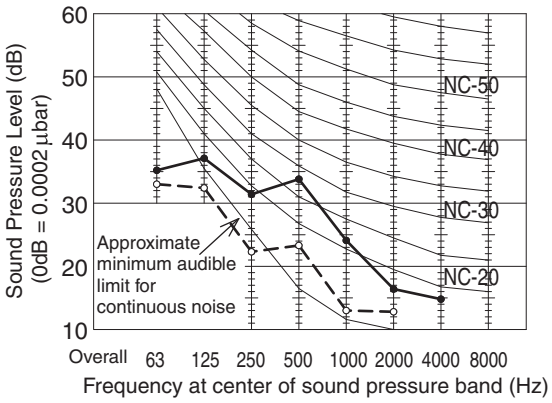

MODEL	: S-28ML1E5 / 36ML1E5	
SOUND LEVEL	: STRONG	33 dB(A)
	HIGH	29 dB(A)
	LOW	26 dB(A)
CONDITION	: 1.5 m directly below unit	

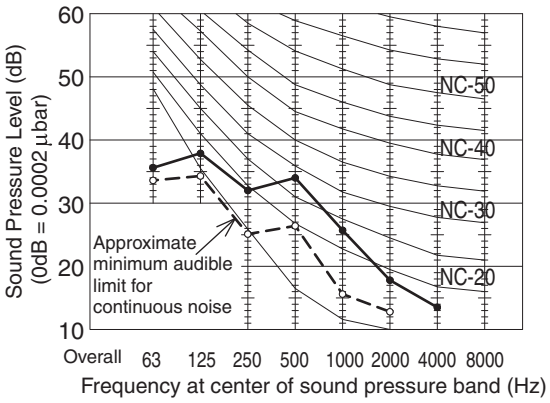

MODEL	: S-45ML1E5 / 56ML1E5	
SOUND LEVEL	: STRONG	35 dB(A)
	HIGH	33 dB(A)
	LOW	29 dB(A)
CONDITION	: 1.5 m directly below unit	

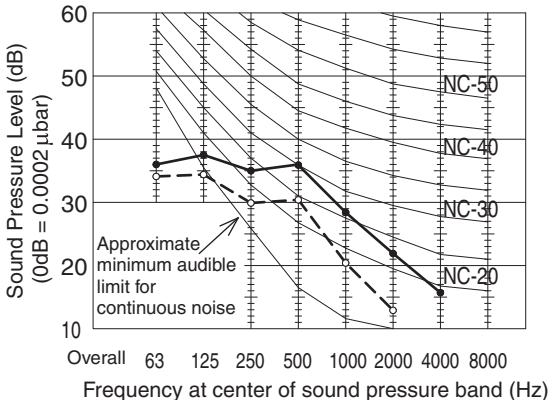

MODEL	: S-73ML1E5	
SOUND LEVEL	: STRONG	38 dB(A)
	HIGH	35 dB(A)
	LOW	33 dB(A)
CONDITION	: 1.5 m directly below unit	

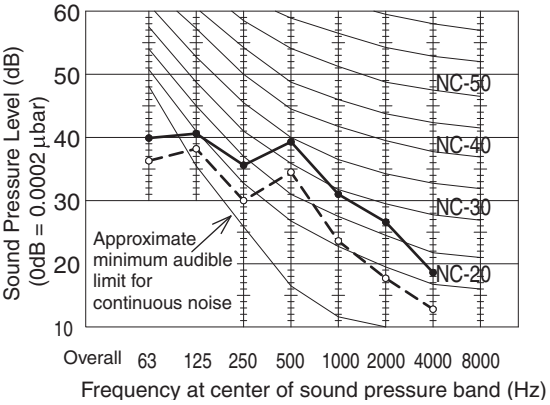

4

9. 2-Way Cassette Type (L1 Type)

9-5. Air Flow Distance Chart (Indoor temp.: Cooling 27°C, heating 20°C)

S-22ML1E5

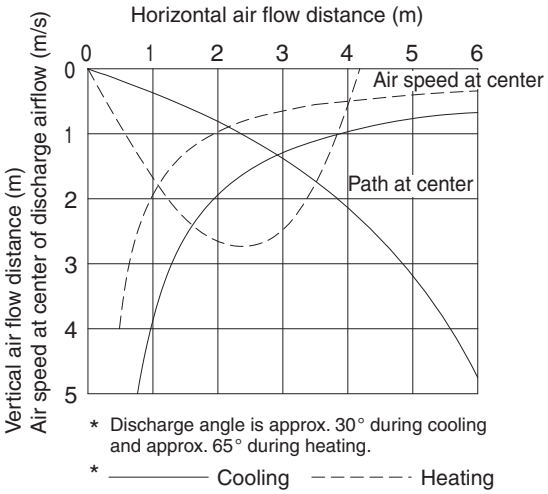

S-28ML1E5, -36ML1E5

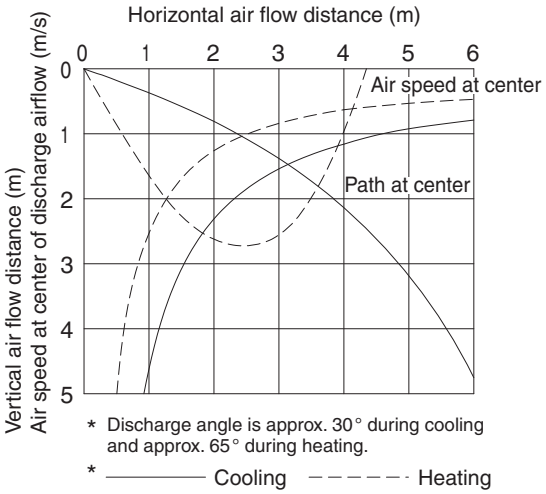

S-45ML1E5, -56ML1E5

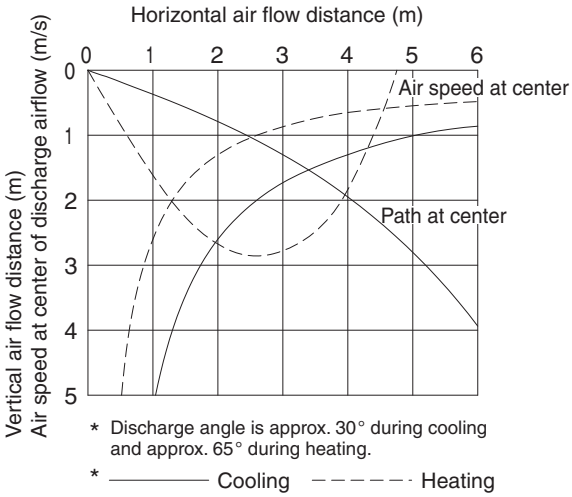

S-73ML1E5

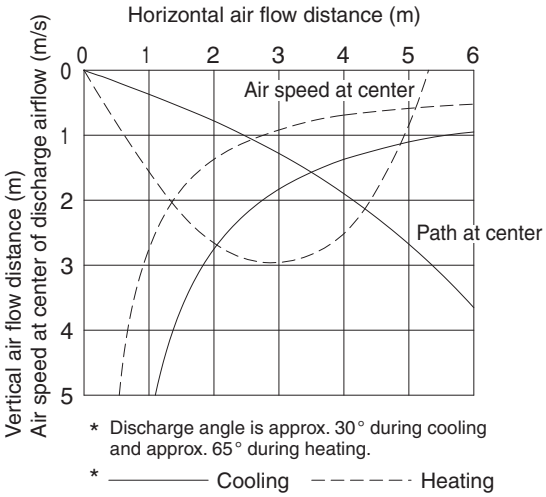

4

10. Wall Mounted Type (K1 Type)

10-1. Specifications

Unit specifications (A)

MODEL No.	Indoor Unit		S-22MK1E5					
POWER SOURCE			220 - 230 - 240 V, Single-phase, 50/60 Hz					
PERFORMANCE			Cooling			Heating		
Capacity		kW	2.2			2.5		
		BTU / h	7,500			8,500		
Air circulation (Hi / Me / Lo)		m^3 / h	540 / 450 / 360					
Moisture removal (High)		Liters / h	0.5			–		
ELECTRICAL RATINGS								
Voltage rating		V	220	230	240	220	230	240
Available voltage range		V	198 - 264			198 - 264		
Running amperes		A	0.16	0.16	0.16	0.17	0.17	0.18
Power input		W	18	19	19	19	19	20
Power factor		%	51	52	49	51	49	46
Max. starting amperes		A	1	1	1	1	1	1
FEATURES								
Controls			Microprocessor					
Fan speeds			3 and Automatic control					
Air filter			Washable, easy access					
Refrigerant control			Electronic expansion valve					
Operation sound (Hi / Me / Lo)		dB-A	35 / 32 / 28					
Refrigerant tubing connections			Flare type					
Refrigerant tube diameter	Liquid tube	mm (in.)	6.35 (1 / 4)					
	Gas tube	mm (in.)	12.7 (1 / 2)					
Drain connection			13 A, OD18 mm					
Remote controller			Optional (Wired / Wireless)					
Refrigerant tubing kit / Accessories			Optional / Hanging wall bracket					
Color (Approximate value)			Munsell N9.1					
DIMENSIONS & WEIGHT			Unit dimensions			Package dimensions		
Unit dimensions	Height	mm (in.)	285 (11-7 / 32)			350 (13-25 / 32)		
	Width	mm (in.)	825 (32-15 / 32)			900 (35-7 / 16)		
	Depth	mm (in.)	217 (8-17 / 32)			270 (10-5 / 8)		
Net weight		kg (lbs.)	10 (22)					
Shipping weight		kg (lbs.)	12 (26.5)					
Shipping volume		m^3 (cu.ft)	0.085 (3.0)					

DATA SUBJECT TO CHANGE WITHOUT NOTICE.

4

Rated conditions
Cooling: Indoor air temperature 27°C DB / 19°C WB; Outdoor air temperature 35°C DB
Heating: Indoor air temperature 20°C DB; Outdoor air temperature 7°C DB / 6°C WB

10. Wall Mounted Type (K1 Type)

Unit specifications (B)

MODEL No.	Indoor Unit		S-28MK1E5					
POWER SOURCE			220 - 230 - 240 V, Single-phase, 50/60 Hz					
PERFORMANCE			Cooling			Heating		
Capacity		kW	2.8			3.2		
		BTU / h	9,600			11,000		
Air circulation (Hi / Me / Lo)		m^3 / h	540 / 450 / 360					
Moisture removal (High)		Liters / h	1.2			–		
ELECTRICAL RATINGS								
Voltage rating		V	220	230	240	220	230	240
Available voltage range		V	198 - 264			198 - 264		
Running amperes		A	0.16	0.16	0.16	0.17	0.17	0.18
Power input		W	18	19	19	19	19	20
Power factor		%	51	52	49	51	49	46
Max. starting amperes		A	1	1	1	1	1	1
FEATURES								
Controls			Microprocessor					
Fan speeds			3 and Automatic control					
Air filter			Washable, easy access					
Refrigerant control			Electronic expansion valve					
Operation sound (Hi / Me / Lo)		dB-A	35 / 32 / 28					
Refrigerant tubing connections			Flare type					
Refrigerant tube diameter	Liquid tube	mm (in.)	6.35 (1 / 4)					
	Gas tube	mm (in.)	12.7 (1 / 2)					
Drain connection			13 A, OD18 mm					
Remote controller			Optional (Wired / Wireless)					
Refrigerant tubing kit / Accessories			Optional / Hanging wall bracket					
Color (Approximate value)			Munsell N9.1					
DIMENSIONS & WEIGHT			Unit dimensions			Package dimensions		
Unit dimensions	Height	mm (in.)	285 (11-7 / 32)			350 (13-25 / 32)		
	Width	mm (in.)	825 (32-15 / 32)			900 (35-7 / 16)		
	Depth	mm (in.)	217 (8-17 / 32)			270 (10-5 / 8)		
Net weight		kg (lbs.)	10 (22)					
Shipping weight		kg (lbs.)	12 (26.5)					
Shipping volume		m^3 (cu.ft)	0.085 (3.0)					

DATA SUBJECT TO CHANGE WITHOUT NOTICE.

Rated conditions
Cooling: Indoor air temperature 27°C DB / 19°C WB; Outdoor air temperature 35°C DB
Heating: Indoor air temperature 20°C DB; Outdoor air temperature 7°C DB / 6°C WB

10. Wall Mounted Type (K1 Type)

Unit specifications (C)

MODEL No.	Indoor Unit		S-36MK1E5					
POWER SOURCE			220 - 230 - 240 V, Single-phase, 50/60 Hz					
PERFORMANCE			Cooling			Heating		
Capacity		kW	3.6			4.2		
		BTU / h	12,000			14,000		
Air circulation (Hi / Me / Lo)		m^3 / h	600 / 510 / 390					
Moisture removal (High)		Liters / h	1.9			–		
ELECTRICAL RATINGS								
Voltage rating		V	220	230	240	220	230	240
Available voltage range		V	198 - 264			198 - 264		
Running amperes		A	0.19	0.19	0.20	0.20	0.20	0.20
Power input		W	21	22	23	22	23	23
Power factor		%	51	52	49	51	49	46
Max. starting amperes		A	1	1	1	1	1	1
FEATURES								
Controls			Microprocessor					
Fan speeds			3 and Automatic control					
Air filter			Washable, easy access					
Refrigerant control			Electronic expansion valve					
Operation sound (Hi / Me / Lo)		dB-A	37 / 33 / 29					
Refrigerant tubing connections			Flare type					
Refrigerant tube diameter	Liquid tube	mm (in.)	6.35 (1 / 4)					
	Gas tube	mm (in.)	12.7 (1 / 2)					
Drain connection			13 A, OD18 mm					
Remote controller			Optional (Wired / Wireless)					
Refrigerant tubing kit / Accessories			Optional / Hanging wall bracket					
Color (Approximate value)			Munsell N9.1					
DIMENSIONS & WEIGHT			Unit dimensions			Package dimensions		
Unit dimensions	Height	mm (in.)	285 (11-7 / 32)			350 (13-25 / 32)		
	Width	mm (in.)	825 (32-15 / 32)			900 (35-7 / 16)		
	Depth	mm (in.)	217 (8-17 / 32)			270 (10-5 / 8)		
Net weight		kg (lbs.)	10 (22)					
Shipping weight		kg (lbs.)	12 (26.5)					
Shipping volume		m^3 (cu.ft)	0.085 (3.0)					

DATA SUBJECT TO CHANGE WITHOUT NOTICE.

4

Rated conditions
Cooling: Indoor air temperature 27°C DB / 19°C WB; Outdoor air temperature 35°C DB
Heating: Indoor air temperature 20°C DB; Outdoor air temperature 7°C DB / 6°C WB

10. Wall Mounted Type (K1 Type)

Unit specifications (D)

MODEL No.	Indoor Unit		S-45MK1E5					
POWER SOURCE			220 - 230 - 240 V, single-phase, 50/60 Hz					
PERFORMANCE			Cooling			Heating		
Capacity		kW	4.5			5.0		
		BTU / h	15,000			17,000		
Air circulation (Hi / Me / Lo)		m^3 / h	720 / 630 / 510					
Moisture removal (High)		Liters / h	1.6			–		
ELECTRICAL RATINGS								
Voltage rating		V	220	230	240	220	230	240
Available voltage range		V	198 - 264			198 - 264		
Running amperes		A	0.27	0.26	0.23	0.27	0.26	0.23
Power input		W	20	20	21	20	20	21
Power factor		%	34	33	38	34	33	38
Max. starting amperes		A	1	1	1	1	1	1
FEATURES								
Controls			Microprocessor					
Timer			ON / OFF Timer (Max. 72 h)					
Fan speeds			3 and Automatic control					
Air filter			Washable, easy access					
Refrigerant control			Electronic expansion valve					
Operation sound (Hi / Me / Lo)		dB-A	38 / 34 / 30					
Refrigerant tubing connections			Flare type					
Refrigerant tube diameter	Liquid tube	mm (in.)	6.35 (1 / 4)					
	Gas tube	mm (in.)	12.7 (1 / 2)					
Drain connection			13 A, OD18 mm					
Remote controller			Optional (Wired / Wireless)					
Refrigerant tubing kit / Accessories			Optional / Hanging wall bracket					
Color (Approximate value)			Munsell N9.1					
DIMENSIONS & WEIGHT			Unit dimensions			Package dimensions		
Unit dimensions	Height	mm (in.)	300 (11-13 / 16)			310 (12-7 / 32)		
	Width	mm (in.)	1065 (41-15 / 16)			1140 (44-7 / 8)		
	Depth	mm (in.)	230 (9-1 / 16)			380 (14-31 / 32)		
Net weight		kg (lbs.)	13 (29)					
Shipping weight		kg (lbs.)	17 (38)					
Shipping volume		m^3 (cu.ft)	0.13 (4.6)					

DATA SUBJECT TO CHANGE WITHOUT NOTICE.

Rated conditions
Cooling: Indoor air temperature 27°C DB / 19°C WB; Outdoor air temperature 35°C DB
Heating: Indoor air temperature 20°C DB; Outdoor air temperature 7°C DB / 6°C WB

10. Wall Mounted Type (K1 Type)

Unit specifications (E)

MODEL No.	Indoor Unit		S-56MK1E5					
POWER SOURCE			220 - 230 - 240 V, single-phase, 50/60 Hz					
PERFORMANCE			Cooling			Heating		
Capacity		kW	5.6			6.3		
		BTU / h	19,000			21,000		
Air circulation (Hi / Me / Lo)		m^3 / h	840 / 720 / 630					
Moisture removal (High)		Liters / h	2.3			–		
ELECTRICAL RATINGS								
Voltage rating		V	220	230	240	220	230	240
Available voltage range		V	198 - 264			198 - 264		
Running amperes		A	0.36	0.35	0.32	0.36	0.35	0.32
Power input		W	29	30	30	29	30	30
Power factor		%	37	37	39	37	37	39
Max. starting amperes		A	1	1	1	1	1	1
FEATURES								
Controls			Microprocessor					
Timer			ON / OFF Timer (Max. 72 h)					
Fan speeds			3 and Automatic control					
Air filter			Washable, easy access					
Refrigerant control			Electronic expansion valve					
Operation sound (Hi / Me / Lo)		dB-A	40 / 36 / 32					
Refrigerant tubing connections			Flare type					
Refrigerant tube diameter	Liquid tube	mm (in.)	6.35 (1 / 4)					
	Gas tube	mm (in.)	12.7 (1 / 2)					
Drain connection			13 A, OD18 mm					
Remote controller			Optional (Wired / Wireless)					
Refrigerant tubing kit / Accessories			Optional / Hanging wall bracket					
Color (Approximate value)			Munsell N9.1					
DIMENSIONS & WEIGHT			Unit dimensions			Package dimensions		
Unit dimensions	Height	mm (in.)	300 (11-13 / 16)			310 (12-7 / 32)		
	Width	mm (in.)	1065 (41-15 / 16)			1140 (44-7 / 8)		
	Depth	mm (in.)	230 (9-1 / 16)			380 (14-31 / 32)		
Net weight		kg (lbs.)	13 (29)					
Shipping weight		kg (lbs.)	17 (38)					
Shipping volume		m^3 (cu.ft)	0.13 (4.6)					

DATA SUBJECT TO CHANGE WITHOUT NOTICE.

Rated conditions
Cooling: Indoor air temperature 27°C DB / 19°C WB; Outdoor air temperature 35°C DB
Heating: Indoor air temperature 20°C DB; Outdoor air temperature 7°C DB / 6°C WB

10. Wall Mounted Type (K1 Type)

Unit specifications (F)

MODEL No.	Indoor Unit		S-73MK1E5					
POWER SOURCE			220 - 230 - 240 V, single-phase, 50/60 Hz					
PERFORMANCE			Cooling			Heating		
Capacity		kW	7.3			8.0		
		BTU / h	25,000			27,000		
Air circulation (Hi / Me / Lo)		m^3 / h	1080 / 870 / 690					
Moisture removal (High)		Liters / h	3.0			–		
ELECTRICAL RATINGS								
Voltage rating		V	220	230	240	220	230	240
Available voltage range		V	198 - 264			198 - 264		
Running amperes		A	0.59	0.58	0.52	0.59	0.58	0.52
Power input		W	56	57	57	56	57	57
Power factor		%	43	43	46	43	43	46
Max. starting amperes		A	1	1	1	1	1	1
FEATURES								
Controls			Microprocessor					
Timer			ON / OFF Timer (Max. 72 h)					
Fan speeds			3 and Automatic control					
Air filter			Washable, easy access					
Refrigerant control			Electronic expansion valve					
Operation sound (Hi / Me / Lo)		dB-A	47 / 44 / 40					
Refrigerant tubing connections			Flare type					
Refrigerant tube diameter	Liquid tube	mm (in.)	9.52 (3 / 8)					
	Gas tube	mm (in.)	15.88 (5 / 8)					
Drain connection			13 A, OD18 mm					
Remote controller			Optional (Wired / Wireless)					
Refrigerant tubing kit / Accessories			Optional / Hanging wall bracket					
Color (Approximate value)			Munsell N9.1					
DIMENSIONS & WEIGHT			Unit dimensions			Package dimensions		
Unit dimensions	Height	mm (in.)	300 (11-13 / 16)			310 (12-7 / 32)		
	Width	mm (in.)	1065 (41-15 / 16)			1140 (44-7 / 8)		
	Depth	mm (in.)	230 (9-1 / 16)			380 (14-31 / 32)		
Net weight		kg (lbs.)	14.5 (32)					
Shipping weight		kg (lbs.)	18 (40)					
Shipping volume		m^3 (cu.ft)	0.13 (4.6)					

DATA SUBJECT TO CHANGE WITHOUT NOTICE.

Rated conditions
Cooling: Indoor air temperature 27°C DB / 19°C WB; Outdoor air temperature 35°C DB
Heating: Indoor air temperature 20°C DB; Outdoor air temperature 7°C DB / 6°C WB

10. Wall Mounted Type (K1 Type)

Unit specifications (G)

MODEL No.	Indoor Unit		S-106MK1E5					
POWER SOURCE			220 - 230 - 240 V, single-phase, 50/60 Hz					
PERFORMANCE			Cooling			Heating		
Capacity		kW	10.6			11.4		
		BTU / h	36,000			39,000		
Air circulation (Hi / Me / Lo)		m^3 / h	1140 / 990 / 780					
Moisture removal (High)		Liters / h	4.9			–		
ELECTRICAL RATINGS								
Voltage rating		V	220	230	240	220	230	240
Available voltage range		V	198 - 264			198 - 264		
Running amperes		A	0.63	0.62	0.55	0.70	0.70	0.62
Power input		W	59	60	60	67	68	68
Power factor		%	43	42	45	44	42	46
Max. starting amperes		A	1	1	1	1	1	1
FEATURES								
Controls			Microprocessor					
Timer			ON / OFF Timer (Max. 72 h)					
Fan speeds			3 and Automatic control					
Air filter			Washable, easy access					
Refrigerant control			Electronic expansion valve					
Operation sound (Hi / Me / Lo)		dB-A	49 / 45 / 42					
Refrigerant tubing connections			Flare type					
Refrigerant tube diameter	Liquid tube	mm (in.)	9.52 (3 / 8)					
	Gas tube	mm (in.)	15.88 (5 / 8)					
Drain connection			13 A, OD18 mm					
Remote controller			Optional (Wired / Wireless)					
Refrigerant tubing kit / Accessories			Optional / Hanging wall bracket					
Color (Approximate value)			Munsell N9.1					
DIMENSIONS & WEIGHT			Unit dimensions			Package dimensions		
Unit dimensions	Height	mm (in.)	300 (11-13 / 16)			310 (12-7 / 32)		
	Width	mm (in.)	1065 (41-15/ 16)			1140 (44-7 / 8)		
	Depth	mm (in.)	230 (9-1 / 16)			380 (14-31 / 32)		
Net weight		kg (lbs.)	14.5 (32)					
Shipping weight		kg (lbs.)	18 (40)					
Shipping volume		m^3 (cu.ft)	0.13 (4.6)					

DATA SUBJECT TO CHANGE WITHOUT NOTICE.

Rated conditions
Cooling: Indoor air temperature 27°C DB / 19°C WB; Outdoor air temperature 35°C DB
Heating: Indoor air temperature 20°C DB; Outdoor air temperature 7°C DB / 6°C WB

10. Wall Mounted Type (K1 Type)

10-2. Major Component Specifications

Indoor unit (A)

MODEL No.			S-22MK1E5
Power source			220 - 230 - 240 V, Single-phase, 50/60 Hz
Controller P.C.B. Ass'y			CR-K075XH (Microprocessor)
Fan (Number...diameter)		mm	Cross-flow (1...ø94 / L634)
Fan motor			
	Model...Nominal output	W	SIC-39CVL-D847-10 … 47 W
	Power source		280 VDC
	No. of pole...r.p.m. (230V, High)	rpm	8P … 1,650
Electronic expansion valve			
	Coil		UKV-A052
	Coil resistance (at 20°C)	Ω	ORG – GRY : 46 YEL – GRY : 46 RED – GRY : 46 BLK – GRY : 46
	Valve body		UKV-18D31
Heat exchanger			
	Coil		Aluminium plate fin / Copper tube
	Rows...fin pitch	mm	2...1.4
	Face area	m^2	0.167

4

10. Wall Mounted Type (K1 Type)

Indoor unit (B)

MODEL No.			**S-28MK1E5**
Power source			220 - 230 - 240 V, Single-phase, 50/60 Hz
Controller P.C.B. Ass'y			CR-K075XH (Microprocessor)
Fan (Number...diameter)		mm	Cross-flow (1...ø94 / L634)
Fan motor			
	Model...Nominal output	W	SIC-39CVL-D847-10 … 47 W
	Power source		280 VDC
	No. of pole...r.p.m. (230V, High)	rpm	8P … 1,650
Electronic expansion valve			
	Coil		UKV-A052
	Coil resistance (at 20°C)	Ω	ORG – GRY : 46 YEL – GRY : 46 RED – GRY : 46 BLK – GRY : 46
	Valve body		UKV-18D31
Heat exchanger			
	Coil		Aluminium plate fin / Copper tube
	Rows...fin pitch	mm	2...1.4
	Face area	m^2	0.167

4

10. Wall Mounted Type (K1 Type)

Indoor unit (C)

MODEL No.			**S-36MK1E5**
Power source			220 - 230 - 240 V, Single-phase, 50/60 Hz
Controller P.C.B. Ass'y			CR-K075XH (Microprocessor)
Fan (Number...diameter)		mm	Cross-flow (1...ø94 / L634)
Fan motor			
	Model...Nominal output	W	SIC-39CVL-D847-10 … 47 W
	Power source		280 VDC
	No. of pole...r.p.m. (230V, High)	rpm	8P … 1,650
Electronic expansion valve			
	Coil		UKV-A052
	Coil resistance (at 20°C)	Ω	ORG – GRY : 46 YEL – GRY : 46 RED – GRY : 46 BLK – GRY : 46
	Valve body		UKV-18D31
Heat exchanger			
	Coil		Aluminium plate fin / Copper tube
	Rows...fin pitch	mm	2...1.4
	Face area	m^2	0.167

4

10. Wall Mounted Type (K1 Type)

Indoor unit (D)

MODEL No.			**S-45MK1E5**
Power source			220 - 230 - 240 V, single-phase, 50/60 Hz
Controller P.C.B. Ass'y			CR-K186XH (Microprocessor)
Fan (Number...diameter)		mm	Cross-flow ø100 / L838
Fan motor			
	Model...Nominal output	W	SIC-39CVL-D847-10...47 W
	Power source		220 - 230 - 240 V / single-phase / 50 Hz
	No. of pole...r.p.m. (230V, High)	rpm	8P... 1,650
Electronic expansion valve			
	Coil		UKV-A052
	Coil resistance (at 20°C)	Ω	ORG – GRY : 46 YEL – GRY : 46 RED – GRY : 46 BLK – GRY : 46
	Valve body		UKV-25D32
Heat exchanger			
	Coil		Aluminium plate fin / Copper tube
	Rows...fin pitch	mm	2...1.3
	Face area	m^2	0.325

4

10. Wall Mounted Type (K1 Type)

Indoor unit (E)

MODEL No.			**S-56MK1E5**
Power source			220 - 230 - 240 V, single-phase, 50/60 Hz
Controller P.C.B. Ass'y			CR-K186XH (Microprocessor)
Fan (Number...diameter)		mm	Cross-flow ø100 / L838
Fan motor			
	Model...Nominal output	W	SIC-39CVL-D847-10...47 W
	Power source		220 - 230 - 240 V / single-phase / 50 Hz
	No. of pole...r.p.m. (230V, High)	rpm	8P... 1,650
Electronic expansion valve			
	Coil		UKV-A052
	Coil resistance (at 20°C)	Ω	ORG – GRY : 46 YEL – GRY : 46 RED – GRY : 46 BLK – GRY : 46
	Valve body		UKV-25D32
Heat exchanger			
	Coil		Aluminium plate fin / Copper tube
	Rows...fin pitch	mm	2...1.3
	Face area	m^2	0.325

4

10. Wall Mounted Type (K1 Type)

Indoor unit (F)

MODEL No.			**S-73MK1E5**
Power source			220 - 230 - 240 V, single-phase, 50/60 Hz
Controller P.C.B. Ass'y			CR-K186XH (Microprocessor)
Fan (Number...diameter)		mm	Cross-flow ø100 / L838
Fan motor			
	Model...Nominal output	W	SIC-39CVL-D847-10...47 W
	Power source		220 - 230 - 240 V / single-phase / 50 Hz
	No. of pole...r.p.m. (230V, High)	rpm	8P... 1,650
Electronic expansion valve			
	Coil		UKV-A052
	Coil resistance (at 20°C)	Ω	ORG – GRY : 46 YEL – GRY : 46 RED – GRY : 46 BLK – GRY : 46
	Valve body		UKV-25D32
Heat exchanger			
	Coil		Aluminium plate fin / Copper tube
	Rows...fin pitch	mm	2+1...1.3
	Face area	m^2	0.334

4

10. Wall Mounted Type (K1 Type)

Indoor unit (G)

MODEL No.			**S-106MK1E5**
Power source			220 - 230 - 240 V, single-phase, 50/60 Hz
Controller P.C.B. Ass'y			CR-K186XH (Microprocessor)
Fan (Number...diameter)		mm	Cross-flow ø100 / L838
Fan motor			
	Model...Nominal output	W	SIC-39CVL-D847-10...47 W
	Power source		220 - 230 - 240 V / single-phase / 50 Hz
	No. of pole...r.p.m. (230V, High)	rpm	8P... 1,650
Electronic expansion valve			
	Coil		UKV-A052
	Coil resistance (at 20°C)	Ω	ORG – GRY : 46 YEL – GRY : 46 RED – GRY : 46 BLK – GRY : 46
	Valve body		UKV-25D32
Heat exchanger			
	Coil		Aluminium plate fin / Copper tube
	Rows...fin pitch	mm	2+1...1.3
	Face area	m^2	0.334

4

10. Wall Mounted Type (K1 Type)

10-3. Dimensional Data

Indoor unit: S-22MK1E5 / 28MK1E5 / 36MK1E5

unit: mm

①	Refrigerant tubing (liquid tube) ϕ6.35(flared)
②	Refrigerant tubing (gas tube) ϕ12.7(flared)
③	Drain hose VP13 (outer dia. ϕ18)
④	Rear panel (PL BACK)
⑤	Rear panel fixing holes (5ϕ holes or 5X13 oval holes)
⑥	Tubing and wiring holes (ϕ65)

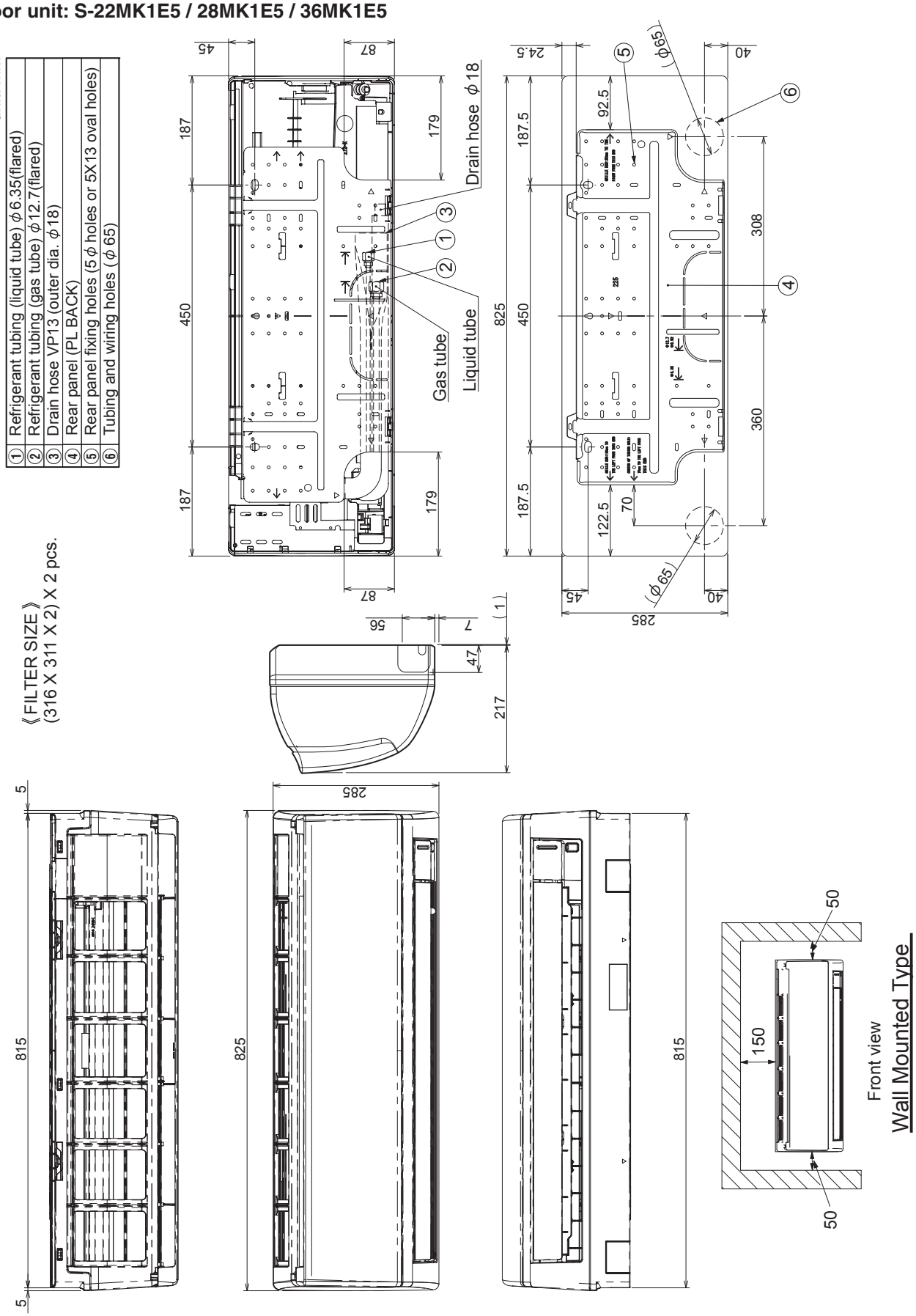

10. Wall Mounted Type (K1 Type)

Indoor unit: S-45MK1E5 / 56MK1E5 / 73MK1E5 / 106MK1E5

unit: mm

①	Refrigerant tubing (liquid tube)	45-56 type	ϕ6.35 (flared)
		73-106 type	ϕ9.52 (flared)
②	Refrigerant tubing (gas tube)	45-56 type	ϕ12.7 (flared)
		73-106 type	ϕ15.88 (flared)
③	Drain hose VP13 (outer dia. ϕ18)		
④	Rear panel (PL BACK)		
⑤	Tubing and wiring holes (ϕ80)		

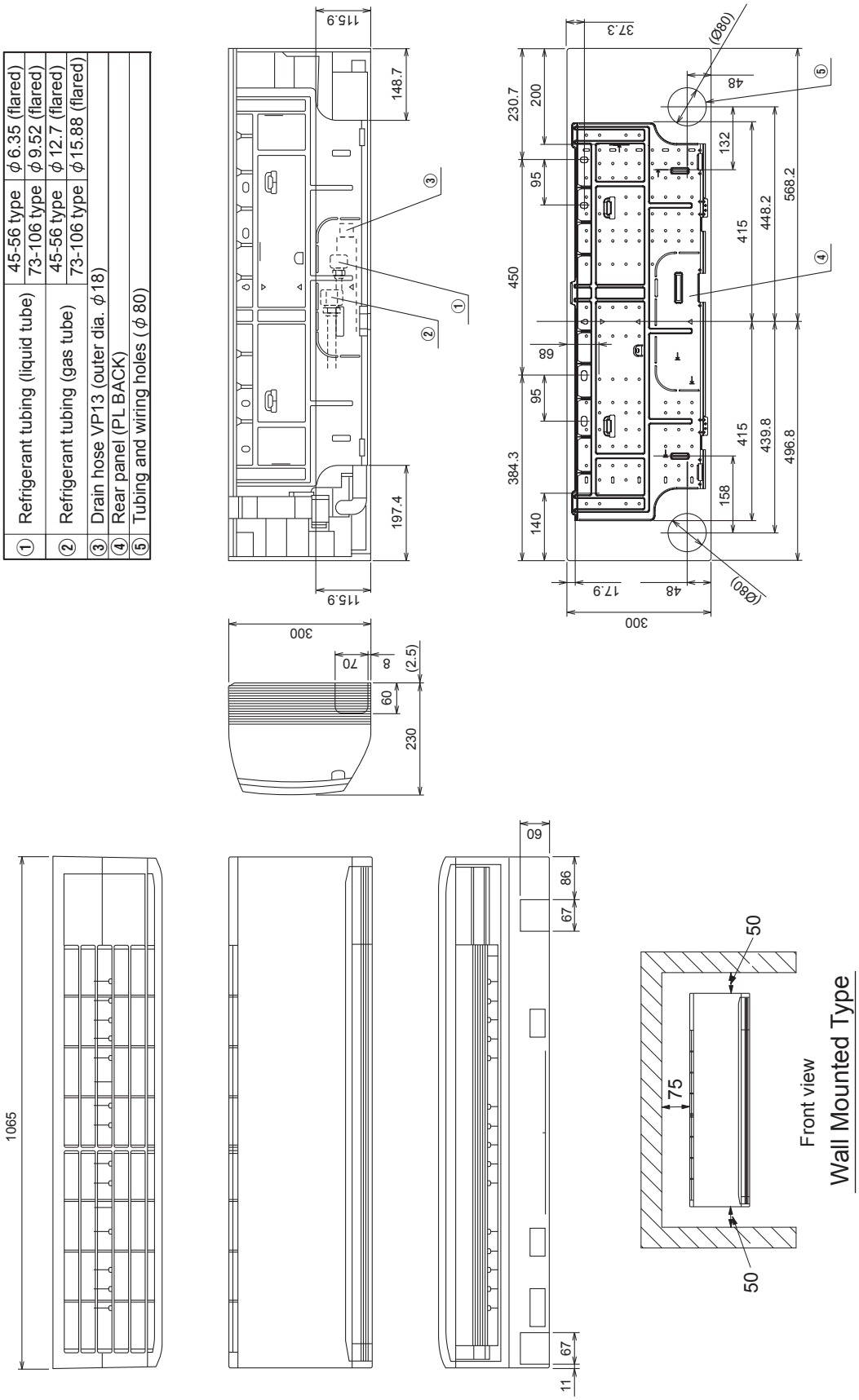

10. Wall Mounted Type (K1 Type)

10-4. Noise Criterion Curves

Both 50Hz and 60Hz
Strong
Weak

MODEL	: S-22MK1E5 / 28MK1E5	
SOUND LEVEL	: STRONG	35 dB(A)
	HIGH	32 dB(A)
	LOW	28 dB(A)
CONDITION	: 1 m in front at height of 1 m	

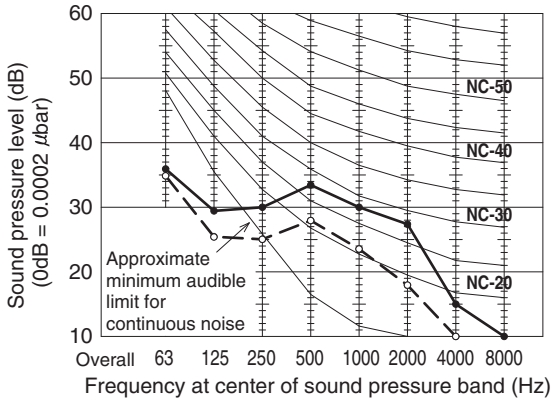

MODEL	: S-36MK1E5	
SOUND LEVEL	: STRONG	37 dB(A)
	HIGH	33 dB(A)
	LOW	29 dB(A)
CONDITION	: 1 m in front at height of 1 m	

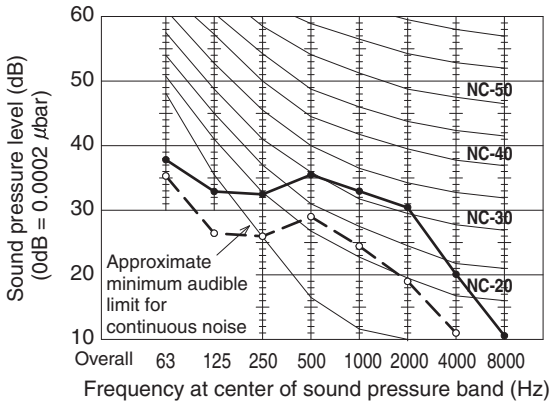

MODEL	: S-45MK1E5	
SOUND LEVEL	: STRONG	38 dB(A)
	HIGH	34 dB(A)
	LOW	30 dB(A)
CONDITION	: 1 m in front at height of 1 m	

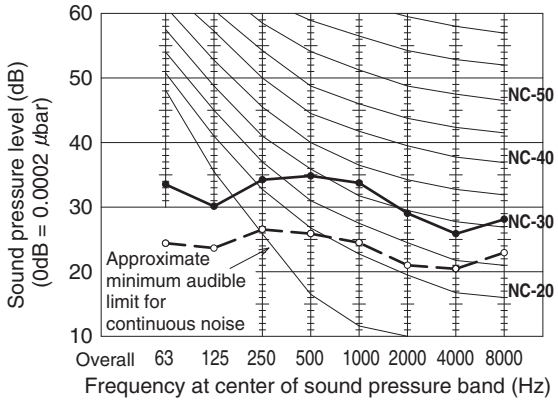

MODEL	: S-56MK1E5	
SOUND LEVEL	: STRONG	40 dB(A)
	HIGH	36 dB(A)
	LOW	32 dB(A)
CONDITION	: 1 m in front at height of 1 m	

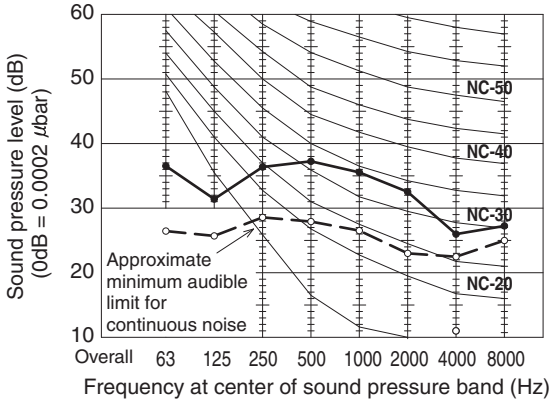

10. Wall Mounted Type (K1 Type)

Both 50Hz and 60Hz

Strong

Weak

MODEL	: S-73MK1E5	
SOUND LEVEL	: STRONG	47 dB(A)
	HIGH	44 dB(A)
	LOW	40 dB(A)
CONDITION	: 1 m in front at height of 1 m	

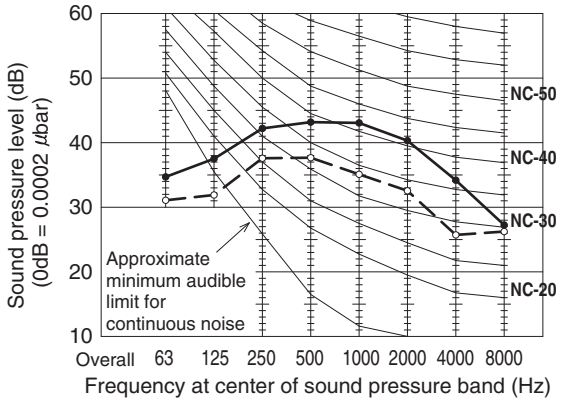

MODEL	: S-106MK1E5	
SOUND LEVEL	: STRONG	49 dB(A)
	HIGH	45 dB(A)
	LOW	42 dB(A)
CONDITION	: 1 m in front at height of 1 m	

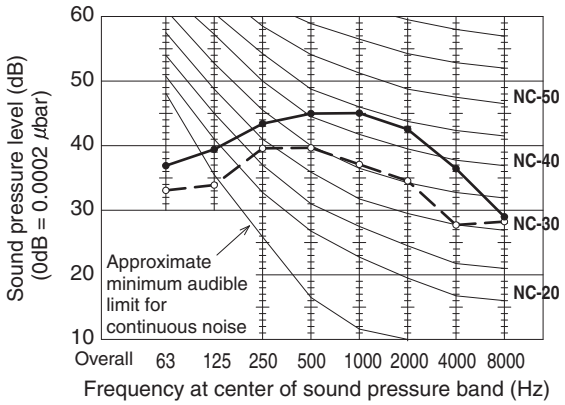

4

10. Wall Mounted Type (K1 Type)

10-5. Air Flow Distance / Temperature Chart

- **S-22MK1E5 / 28MK1E5**

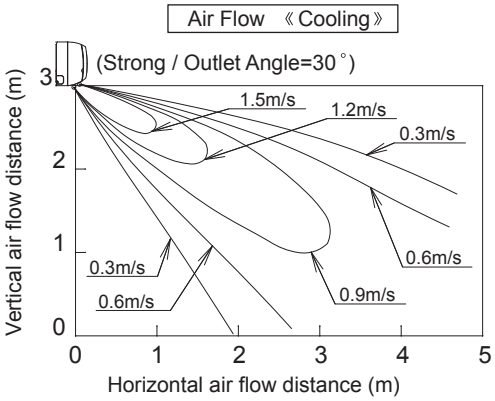

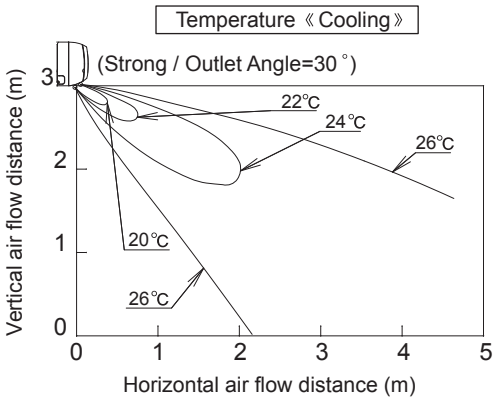

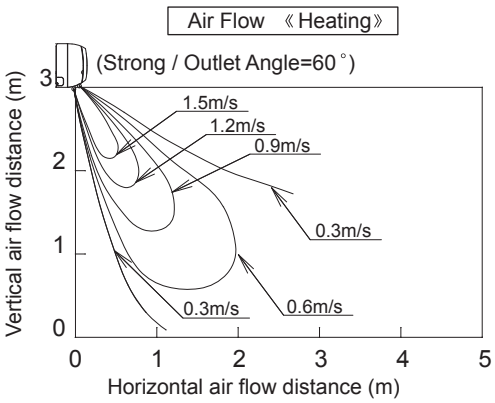

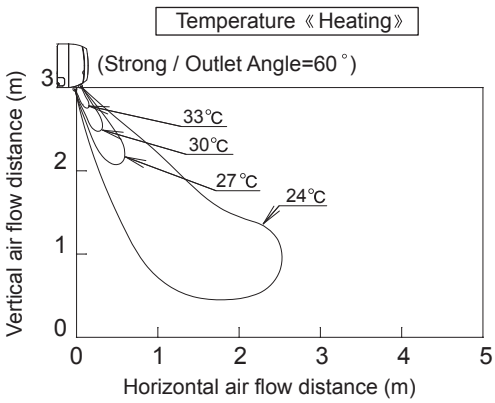

- **S-36MK1E5**

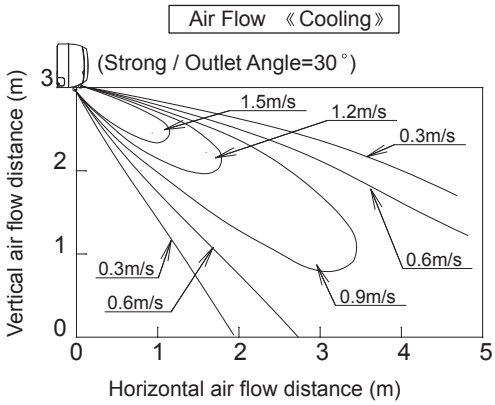

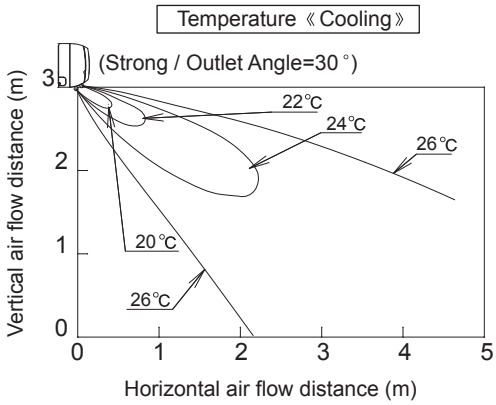

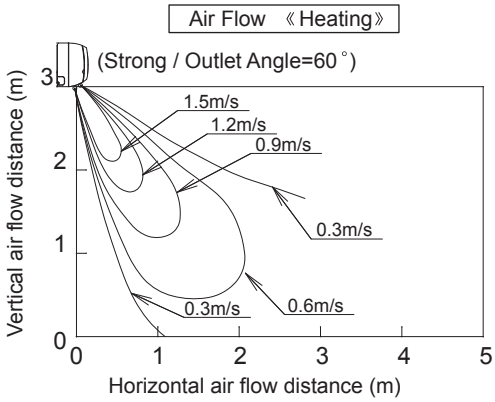

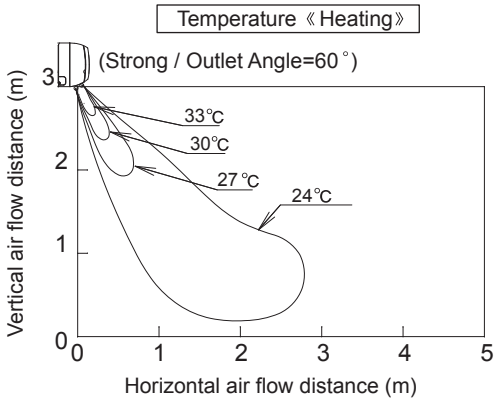

10. Wall Mounted Type (K1 Type)

- **S-45MK1E5**

Heating : Distribution of wind velocity

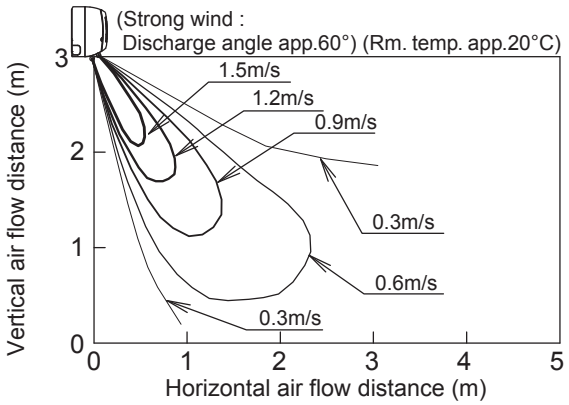

Heating : Distribution of temperature

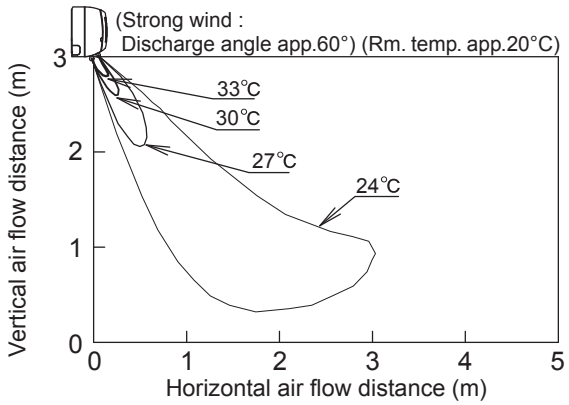

Cooling : Distribution of wind velocity

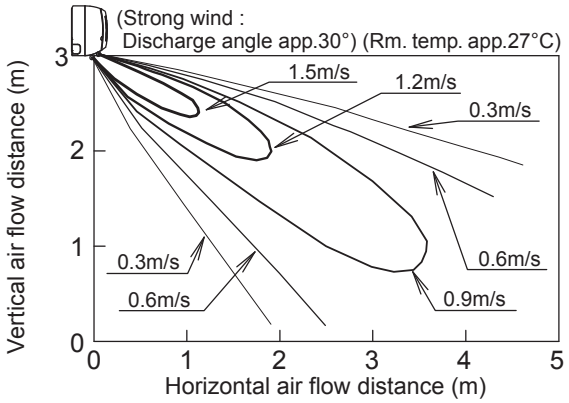

Cooling : Distribution of temperature

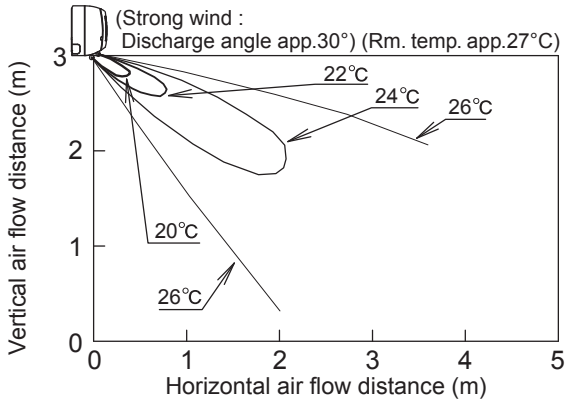

- **S-56MK1E5**

Heating : Distribution of wind velocity

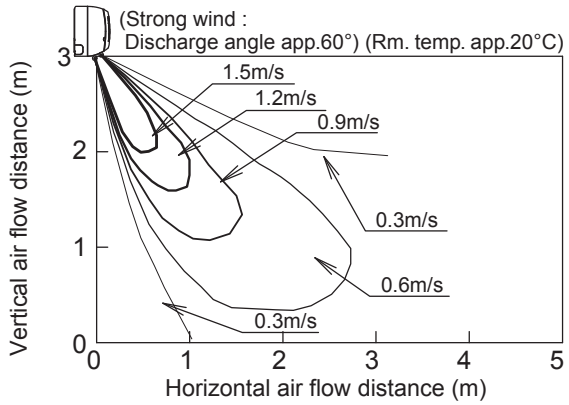

Heating : Distribution of temperature

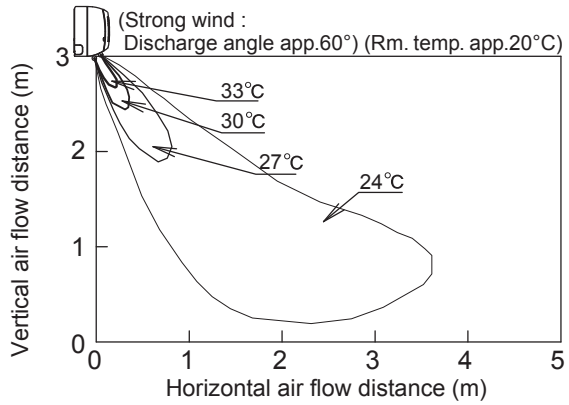

Cooling : Distribution of wind velocity

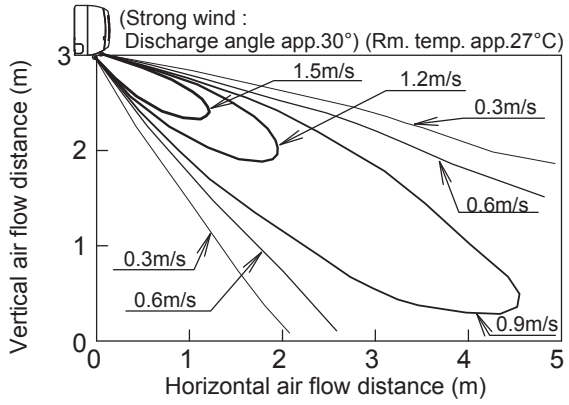

Cooling : Distribution of temperature

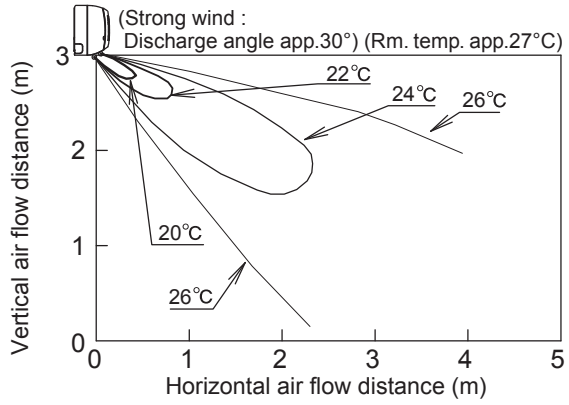

4

10. Wall Mounted Type (K1 Type)

- **S-73MK1E5**

Heating : Distribution of wind velocity

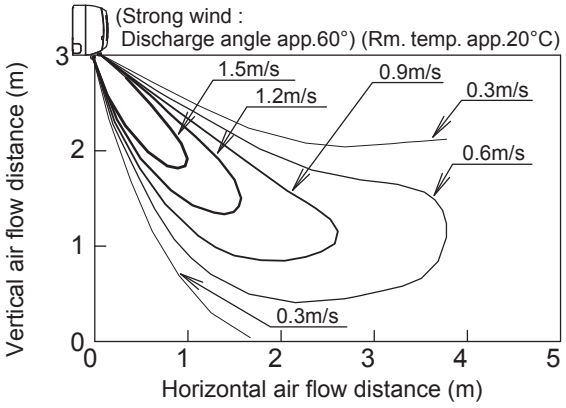

Heating : Distribution of temperature

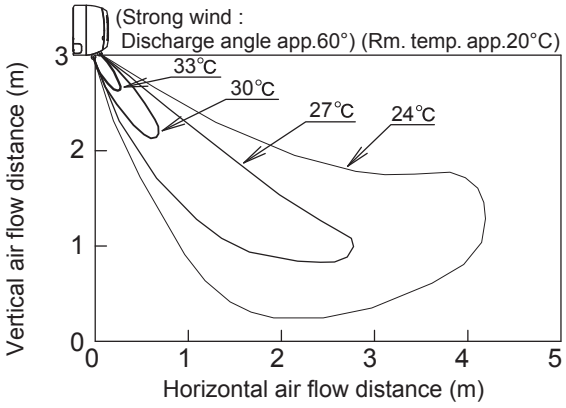

Cooling : Distribution of wind velocity

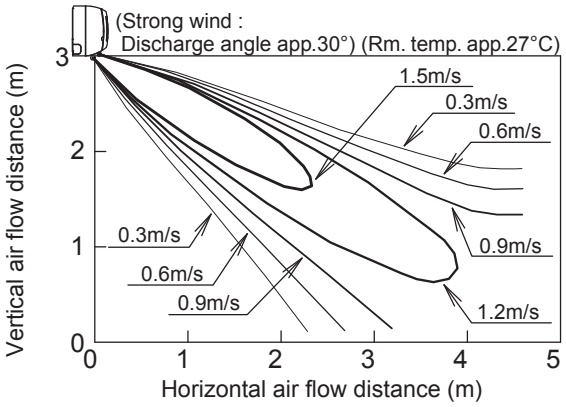

Cooling : Distribution of temperature

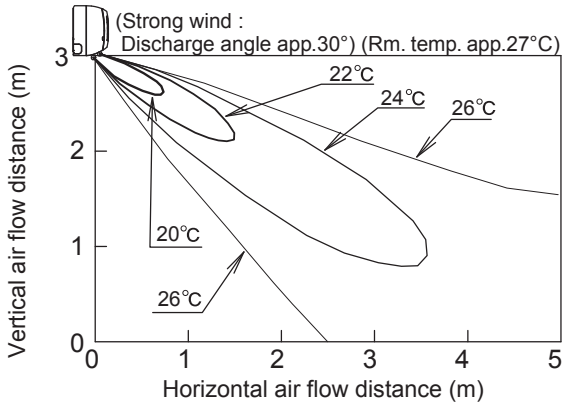

- **S-106MK1E5**

Heating : Distribution of wind velocity

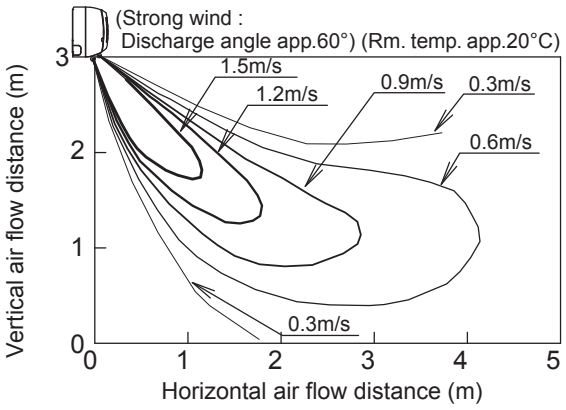

Heating : Distribution of temperature

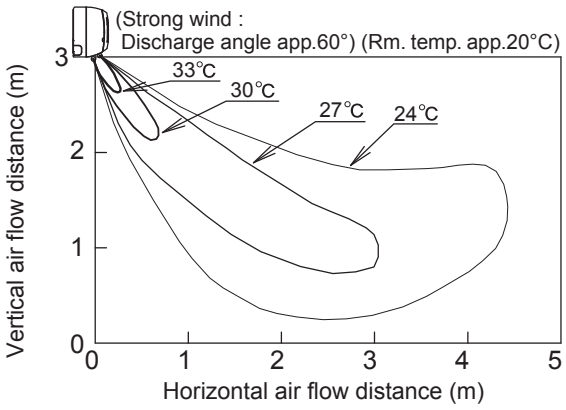

Cooling : Distribution of wind velocity

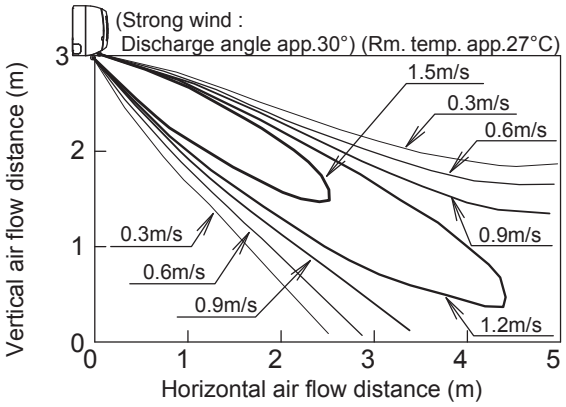

Cooling : Distribution of temperature

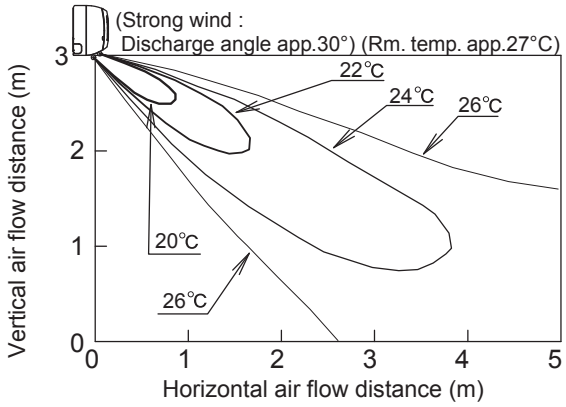

4

11. Ceiling Type (T1 Type)

11-1. Specifications

Unit specifications (A)

MODEL No.	Indoor Unit		S-36MT1E5					
POWER SOURCE			220 - 230 - 240 V, single-phase, 50/60 Hz					
PERFORMANCE			Cooling			Heating		
Capacity		kW	3.6			4.2		
		BTU / h	12,000			14,000		
Air circulation (Hi / Me / Lo)		m^3 / h	720 / 600 / 540					
Moisture removal (High)		Liters / h	1.4			–		
ELECTRICAL RATINGS								
Voltage rating		V	220	230	240	220	230	240
Available voltage range		V	198 - 264			198 - 264		
Running amperes		A	0.26	0.24	0.23	0.26	0.24	0.23
Power input		W	28	29	39	28	28	29
Power factor		%	49	53	53	49	51	53
Max. starting amperes		A	2	2	2	2	2	2
FEATURES								
Controls			Microprocessor					
Timer			ON / OFF Timer (Max. 72 h)					
Fan speeds			3 and Automatic control					
Air filter			Washable, easy access, long life (2,500 h)					
Refrigerant control			Electronic expansion valve					
Operation sound (Hi / Me / Lo)		dB-A	35 / 32 / 30					
Refrigerant tubing connections			Flare type					
Refrigerant tube diameter	Liquid tube	mm (in.)	6.35 (1 / 4)					
	Gas tube	mm (in.)	12.7 (1 / 2)					
Drain connection			20 A, OD26 mm					
Remote controller			Optional (Wired / Wireless)					
Refrigerant tubing kit / Accessories			Optional / –					
Color (Approximate value)			Munsell 10Y 9.0 / 0.4, RAL 9010-GL					
DIMENSIONS & WEIGHT			Unit dimensions			Package dimensions		
Unit dimensions	Height	mm (in.)	210 (8-9 / 32)			280 (11-1 / 32)		
	Width	mm (in.)	910 (35-13 / 16)			958 (37-23 / 32)		
	Depth	mm (in.)	680 (26-25 / 32)			780 (30-23 / 32)		
Net weight		kg (lbs.)	21 (46)					
Shipping weight		kg (lbs.)	24 (53)					
Shipping volume		m^3 (cu.ft)	0.215 (7.6)					

DATA SUBJECT TO CHANGE WITHOUT NOTICE.

Rated conditions
Cooling: Indoor air temperature 27°C DB / 19°C WB; Outdoor air temperature 35°C DB
Heating: Indoor air temperature 20°C DB; Outdoor air temperature 7°C DB / 6°C WB

11. Ceiling Type (T1 Type)

Unit specifications (B)

MODEL No.	Indoor Unit		S-45MT1E5					
POWER SOURCE			220 - 230 - 240 V, single-phase, 50/60 Hz					
PERFORMANCE			Cooling			Heating		
Capacity		kW	4.5			5.0		
		BTU / h	15,000			17,000		
Air circulation (Hi / Me / Lo)		m^3 / h	780 / 660 / 540					
Moisture removal (High)		Liters / h	1.4			–		
ELECTRICAL RATINGS								
Voltage rating		V	220	230	240	220	230	240
Available voltage range		V	198 - 264			198 - 264		
Running amperes		A	0.26	0.24	0.23	0.26	0.24	0.23
Power input		W	28	29	29	28	28	29
Power factor		%	49	53	53	49	51	53
Max. starting amperes		A	2	2	2	2	2	2
FEATURES								
Controls			Microprocessor					
Timer			ON / OFF Timer (Max. 72 h)					
Fan speeds			3 and Automatic control					
Air filter			Washable, easy access, long life (2,500 h)					
Refrigerant control			Electronic expansion valve					
Operation sound (Hi / Me / Lo)		dB-A	36 / 33 / 30					
Refrigerant tubing connections			Flare type					
Refrigerant tube diameter	Liquid tube	mm (in.)	6.35 (1 / 4)					
	Gas tube	mm (in.)	12.7 (1 / 2)					
Drain connection			20 A, OD26 mm					
Remote controller			Optional (Wired / Wireless)					
Refrigerant tubing kit / Accessories			Optional / –					
Color (Approximate value)			Munsell 10Y 9.0 / 0.4, RAL 9010-GL					
DIMENSIONS & WEIGHT			Unit dimensions			Package dimensions		
Unit dimensions	Height	mm (in.)	210 (8-9 / 32)			280 (11-1 / 32)		
	Width	mm (in.)	910 (35-13 / 16)			958 (37-23 / 32)		
	Depth	mm (in.)	680 (26-25 / 32)			780 (30-23 / 32)		
Net weight		kg (lbs.)	21 (46)					
Shipping weight		kg (lbs.)	24 (53)					
Shipping volume		m^3 (cu.ft)	0.215 (7.6)					

DATA SUBJECT TO CHANGE WITHOUT NOTICE.

Rated conditions
Cooling: Indoor air temperature 27°C DB / 19°C WB; Outdoor air temperature 35°C DB
Heating: Indoor air temperature 20°C DB; Outdoor air temperature 7°C DB / 6°C WB

11. Ceiling Type (T1 Type)

Unit specifications (C)

MODEL No.	Indoor Unit		S-56MT1E5					
POWER SOURCE			220 - 230 - 240 V, single-phase, 50/60 Hz					
PERFORMANCE			Cooling			Heating		
Capacity		kW	5.6			6.3		
		BTU / h	19,000			21,000		
Air circulation (Hi / Me / Lo)		m^3 / h	780 / 660 / 540					
Moisture removal (High)		Liters / h	2.0			–		
ELECTRICAL RATINGS								
Voltage rating		V	220	230	240	220	230	240
Available voltage range		V	198 - 264			198 - 264		
Running amperes		A	0.28	0.26	0.24	0.28	0.26	0.25
Power input		W	31	32	32	31	31	32
Power factor		%	50	54	56	50	52	53
Max. starting amperes		A	2	2	2	2	2	2
FEATURES								
Controls			Microprocessor					
Timer			ON / OFF Timer (Max. 72 h)					
Fan speeds			3 and Automatic control					
Air filter			Washable, easy access, long life (2,500 h)					
Refrigerant control			Electronic expansion valve					
Operation sound (Hi / Me / Lo)		dB-A	36 / 33 / 30					
Refrigerant tubing connections			Flare type					
Refrigerant tube diameter	Liquid tube	mm (in.)	6.35 (1 / 4)					
	Gas tube	mm (in.)	12.7 (1 / 2)					
Drain connection			20 A, OD26 mm					
Remote controller			Optional (Wired / Wireless)					
Refrigerant tubing kit / Accessories			Optional / –					
Color (Approximate value)			Munsell 10Y 9.0 / 0.4, RAL 9010-GL					
DIMENSIONS & WEIGHT			Unit dimensions			Package dimensions		
Unit dimensions	Height	mm (in.)	210 (8-9 / 32)			280 (11-1 / 32)		
	Width	mm (in.)	910 (35-13 / 16)			958 (37-23 / 32)		
	Depth	mm (in.)	680 (26-25 / 32)			780 (30-23 / 32)		
Net weight		kg (lbs.)	21 (46)					
Shipping weight		kg (lbs.)	24 (53)					
Shipping volume		m^3 (cu.ft)	0.215 (7.6)					

DATA SUBJECT TO CHANGE WITHOUT NOTICE.

Rated conditions
Cooling: Indoor air temperature 27°C DB / 19°C WB; Outdoor air temperature 35°C DB
Heating: Indoor air temperature 20°C DB; Outdoor air temperature 7°C DB / 6°C WB

11. Ceiling Type (T1 Type)

Unit specifications (D)

MODEL No.	Indoor Unit		S-73MT1E5					
POWER SOURCE			220 - 230 - 240 V, single-phase, 50/60 Hz					
PERFORMANCE			Cooling			Heating		
Capacity		kW	7.3			8.0		
		BTU / h	25,000			27,000		
Air circulation (Hi / Me / Lo)		m^3 / h	1110 / 900 / 840					
Moisture removal (High)		Liters / h	3.0			–		
ELECTRICAL RATINGS								
Voltage rating		V	220	230	240	220	230	240
Available voltage range		V	198 - 264			198 - 264		
Running amperes		A	0.38	0.35	0.33	0.38	0.35	0.34
Power input		W	43	43	44	42	42	43
Power factor		%	51	53	56	50	52	53
Max. starting amperes		A	2	2	2	2	2	2
FEATURES								
Controls			Microprocessor					
Timer			ON / OFF Timer (Max. 72 h)					
Fan speeds			3 and Automatic control					
Air filter			Washable, easy access, long life (2,500 h)					
Refrigerant control			Electronic expansion valve					
Operation sound (Hi / Me / Lo)		dB-A	38 / 36 / 33					
Refrigerant tubing connections			Flare type					
Refrigerant tube diameter	Liquid tube	mm (in.)	9.52 (3 / 8)					
	Gas tube	mm (in.)	15.88 (5 / 8)					
Drain connection			20 A, OD26 mm					
Remote controller			Optional (Wired / Wireless)					
Refrigerant tubing kit / Accessories			Optional / –					
Color (Approximate value)			Munsell 10Y 9.0 / 0.4, RAL 9010-GL					
DIMENSIONS & WEIGHT			Unit dimensions			Package dimensions		
Unit dimensions	Height	mm (in.)	210 (8-9 / 32)			280 (11-1 / 32)		
	Width	mm (in.)	1180 (46-15 / 32)			1255 (49-13 / 32)		
	Depth	mm (in.)	680 (26-25 / 32)			780 (30-23 / 32)		
Net weight		kg (lbs.)	25 (55)					
Shipping weight		kg (lbs.)	28 (62)					
Shipping volume		m^3 (cu.ft)	0.274 (9.7)					

DATA SUBJECT TO CHANGE WITHOUT NOTICE.

Rated conditions
Cooling: Indoor air temperature 27°C DB / 19°C WB; Outdoor air temperature 35°C DB
Heating: Indoor air temperature 20°C DB; Outdoor air temperature 7°C DB / 6°C WB

11. Ceiling Type (T1 Type)

Unit specifications (E)

MODEL No.	Indoor Unit		S-106MT1E5					
POWER SOURCE			220 - 230 - 240 V, single-phase, 50/60 Hz					
PERFORMANCE			Cooling			Heating		
Capacity		kW	10.6			11.4		
		BTU / h	36,000			39,000		
Air circulation (Hi / Me / Lo)		m^3 / h	1650 / 1380 / 1200					
Moisture removal (High)		Liters / h	3.9			–		
ELECTRICAL RATINGS								
Voltage rating		V	220	230	240	220	230	240
Available voltage range		V	198 - 264			198 - 264		
Running amperes		A	0.62	0.57	0.53	0.62	0.57	0.55
Power input		W	73	74	75	72	73	74
Power factor		%	54	56	59	53	56	56
Max. starting amperes		A	3	3	3	3	3	3
FEATURES								
Controls			Microprocessor					
Timer			ON / OFF Timer (Max. 72 h)					
Fan speeds			3 and Automatic control					
Air filter			Washable, easy access, long life (2,500 h)					
Refrigerant control			Electronic expansion valve					
Operation sound (Hi / Me / Lo)		dB-A	41 / 38 / 35					
Refrigerant tubing connections			Flare type					
Refrigerant tube diameter	Liquid tube	mm (in.)	9.52 (3 / 8)					
	Gas tube	mm (in.)	15.88 (5 / 8)					
Drain connection			20 A, OD26 mm					
Remote controller			Optional (Wired / Wireless)					
Refrigerant tubing kit / Accessories			Optional / –					
Color (Approximate value)			Munsell 10Y 9.0 / 0.4, RAL 9010-GL					
DIMENSIONS & WEIGHT			Unit dimensions			Package dimensions		
Unit dimensions	Height	mm (in.)	210 (8-9 / 32)			280 (11-1 / 32)		
	Width	mm (in.)	1595 (62-25 / 32)			1670 (65-3 / 4)		
	Depth	mm (in.)	680 (26-25 / 32)			780 (30-23 / 32)		
Net weight		kg (lbs.)	33 (73)					
Shipping weight		kg (lbs.)	37 (82)					
Shipping volume		m^3 (cu.ft)	0.365 (12.9)					

DATA SUBJECT TO CHANGE WITHOUT NOTICE.

Rated conditions
Cooling: Indoor air temperature 27°C DB / 19°C WB; Outdoor air temperature 35°C DB
Heating: Indoor air temperature 20°C DB; Outdoor air temperature 7°C DB / 6°C WB

11. Ceiling Type (T1 Type)

Unit specifications (F)

MODEL No.	Indoor Unit		S-140MT1E5					
POWER SOURCE			220 - 230 - 240 V, single-phase, 50/60 Hz					
PERFORMANCE			Cooling			Heating		
Capacity		kW	14.0			16.0		
		BTU / h	47,800			54,600		
Air circulation (Hi / Me / Lo)		m^3 / h	1800 / 1560 / 1320					
Moisture removal (High)		Liters / h	5.6			–		
ELECTRICAL RATINGS								
Voltage rating		V	220	230	240	220	230	240
Available voltage range		V	198 - 264			198 - 264		
Running amperes		A	0.69	0.63	0.60	0.69	0.63	0.62
Power input		W	85	86	88	84	85	86
Power factor		%	56	59	61	55	59	58
Max. starting amperes		A	3	3	3	3	3	3
FEATURES								
Controls			Microprocessor					
Timer			ON / OFF Timer (Max. 72 h)					
Fan speeds			3 and Automatic control					
Air filter			Washable, easy access, long life (2,500 h)					
Refrigerant control			Electronic expansion valve					
Operation sound (Hi / Me / Lo)		dB-A	43 / 40 / 37					
Refrigerant tubing connections			Flare type					
Refrigerant tube diameter	Liquid tube	mm (in.)	9.52 (3 / 8)					
	Gas tube	mm (in.)	15.88 (5 / 8)					
Drain connection			20 A, OD26 mm					
Remote controller			Optional (Wired / Wireless)					
Refrigerant tubing kit / Accessories			Optional / –					
Color (Approximate value)			Munsell 10Y 9.0 / 0.4, RAL 9010-GL					
DIMENSIONS & WEIGHT			Unit dimensions			Package dimensions		
Unit dimensions	Height	mm (in.)	210 (8-9 / 32)			280 (11-1 / 32)		
	Width	mm (in.)	1595 (62-25 / 32)			1670 (65-3 / 4)		
	Depth	mm (in.)	680 (26-25 / 32)			780 (30-23 / 32)		
Net weight		kg (lbs.)	33 (73)					
Shipping weight		kg (lbs.)	37 (82)					
Shipping volume		m^3 (cu.ft)	0.365 (12.9)					

DATA SUBJECT TO CHANGE WITHOUT NOTICE.

Rated conditions
Cooling: Indoor air temperature 27°C DB / 19°C WB; Outdoor air temperature 35°C DB
Heating: Indoor air temperature 20°C DB; Outdoor air temperature 7°C DB / 6°C WB

11. Ceiling Type (T1 Type)

11-2. Major Component Specifications

Indoor unit (A)

MODEL No.			S-36MT1E5
Power source			220 - 230 - 240 V, single-phase, 50/60 Hz
Controller P.C.B. Ass'y			CR-SXRP56B-B (Microprocessor)
Fan (Number...diameter)		mm	Centrifugal (2...ø140)
Fan motor			
	Model...Nominal output	W	DK8-63C280H...30 W
	Power source		340 VDC
	No. of pole...r.p.m. (230V, High)	rpm	8P... 920
	Coil resistance (Ambient temperature 20°C)	Ω	RED – WHT : 53.0 WHT – BLU : 53.0 BLU – RED : 53.0
	Run capacitor	VAC, μF	–
Safety device			Thermal protector, fuse
Electronic expansion valve			
	Coil		UKV-U030E
	Coil resistance (at 20°C)	Ω	ORG – GRY : 46 YEL – GRY : 46 RED – GRY : 46 BLK – GRY : 46
	Valve body		UKV-25D32
Heat exchanger			
	Coil		Aluminium plate fin / Copper tube
	Rows...fin pitch	mm	3...1.4
	Face area	m^2	0.154

4

11. Ceiling Type (T1 Type)

Indoor unit (B)

MODEL No.			**S-45MT1E5**
Power source			220 - 230 - 240 V, single-phase, 50/60 Hz
Controller P.C.B. Ass'y			CR-SXRP56B-B (Microprocessor)
Fan (Number...diameter)		mm	Centrifugal (2...ø140)
Fan motor			
	Model...Nominal output	W	DK8-63C280H...30 W
	Power source		340 VDC
	No. of pole...r.p.m. (230V, High)	rpm	8P... 920
	Coil resistance (Ambient temperature 20°C)	Ω	RED – WHT : 53.0 WHT – BLU : 53.0 BLU – RED : 53.0
	Run capacitor	VAC, μF	–
Safety device			Thermal protector, fuse
Electronic expansion valve			
	Coil		UKV-U030E
	Coil resistance (at 20°C)	Ω	ORG – GRY : 46 YEL – GRY : 46 RED – GRY : 46 BLK – GRY : 46
	Valve body		UKV-25D32
Heat exchanger			
	Coil		Aluminium plate fin / Copper tube
	Rows...fin pitch	mm	3...1.4
	Face area	m^2	0.154

4

11. Ceiling Type (T1 Type)

Indoor unit (C)

MODEL No.			**S-56MT1E5**
Power source			220 - 230 - 240 V, single-phase, 50/60 Hz
Controller P.C.B. Ass'y			CR-SXRP56B-B (Microprocessor)
Fan (Number...diameter)		mm	Centrifugal (2...ø140)
Fan motor			
	Model...Nominal output	W	DK8-63C280H...30 W
	Power source		340 VDC
	No. of pole...r.p.m. (230V, High)	rpm	8P... 960
	Coil resistance (Ambient temperature 20°C)	Ω	RED – WHT : 53.0 WHT – BLU : 53.0 BLU – RED : 53.0
	Run capacitor	VAC, μF	–
Safety device			Thermal protector, fuse
Electronic expansion valve			
	Coil		UKV-U030E
	Coil resistance (at 20°C)	Ω	ORG – GRY : 46 YEL – GRY : 46 RED – GRY : 46 BLK – GRY : 46
	Valve body		UKV-25D32
Heat exchanger			
	Coil		Aluminium plate fin / Copper tube
	Rows...fin pitch	mm	3...1.4
	Face area	m^2	0.154

4

11. Ceiling Type (T1 Type)

Indoor unit (D)

MODEL No.			**S-73MT1E5**
Power source			220 - 230 - 240 V, single-phase, 50/60 Hz
Controller P.C.B. Ass'y			CR-SXRP56B-B (Microprocessor)
Fan (Number...diameter)		mm	Centrifugal (3...ø140)
Fan motor			
	Model...Nominal output	W	DK8-63D280H...40 W
	Power source		340 VDC
	No. of pole...r.p.m. (230V, High)	rpm	8P... 980
	Coil resistance (Ambient temperature 20°C)	Ω	RED – WHT : 53.0 WHT – BLU : 53.0 BLU – RED : 53.0
	Run capacitor	VAC, μF	–
Safety device			Thermal protector, fuse
Electronic expansion valve			
	Coil		UKV-U030E
	Coil resistance (at 20°C)	Ω	ORG – GRY : 46 YEL – GRY : 46 RED – GRY : 46 BLK – GRY : 46
	Valve body		UKV-25D32
Heat exchanger			
	Coil		Aluminium plate fin / Copper tube
	Rows...fin pitch	mm	3...1.4
	Face area	m^2	0.222

4

11. Ceiling Type (T1 Type)

Indoor unit (E)

MODEL No.			**S-106MT1E5**
Power source			220 - 230 - 240 V, single-phase, 50/60 Hz
Controller P.C.B. Ass'y			CR-SXRP56B-B (Microprocessor)
Fan (Number...diameter)		mm	Centrifugal (4...ø140)
Fan motor			
	Model...Nominal output	W	DK8-123C280H...80 W
	Power source		340 VDC
	No. of pole...r.p.m. (230V, High)	rpm	8P... 1,040
	Coil resistance (Ambient temperature 20°C)	Ω	RED – WHT : 37.0 WHT – BLU : 37.0 BLU – RED : 37.0
	Run capacitor	VAC, μF	–
Safety device			Thermal protector, fuse
Electronic expansion valve			
	Coil		UKV-U030E
	Coil resistance (at 20°C)	Ω	ORG – GRY : 46 YEL – GRY : 46 RED – GRY : 46 BLK – GRY : 46
	Valve body		UKV-30D33
Heat exchanger			
	Coil		Aluminium plate fin / Copper tube
	Rows...fin pitch	mm	3...1.4
	Face area	m^2	0.326

4

11. Ceiling Type (T1 Type)

Indoor unit (F)

MODEL No.			**S-140MT1E5**
Power source			220 - 230 - 240 V, single-phase, 50/60 Hz
Controller P.C.B. Ass'y			CR-SXRP56B-B (Microprocessor)
Fan (Number...diameter)		mm	Centrifugal (4...ø140)
Fan motor			
	Model...Nominal output	W	DK8-123C280H...80 W
	Power source		340 VDC
	No. of pole...r.p.m. (230V, High)	rpm	8P... 1,100
	Coil resistance (Ambient temperature 20°C)	Ω	RED – WHT : 37.0 WHT – BLU : 37.0 BLU – RED : 37.0
	Run capacitor	VAC, μF	–
Safety device			Thermal protector, fuse
Electronic expansion valve			
	Coil		UKV-U030E
	Coil resistance (at 20°C)	Ω	ORG – GRY : 46 YEL – GRY : 46 RED – GRY : 46 BLK – GRY : 46
	Valve body		UKV-30D33
Heat exchanger			
	Coil		Aluminium plate fin / Copper tube
	Rows...fin pitch	mm	3...1.4
	Face area	m^2	0.326

4

11. Ceiling Type (T1 Type)

11-3. Dimensional Data

Type \ Length	A	B	C
S-36MT1E5, 45MT1E5, 56MT1E5	855	910	210
S-73MT1E5	1125	1180	210
S-106MT1E5, 140MT1E5	1540	1595	210

Unit: mm

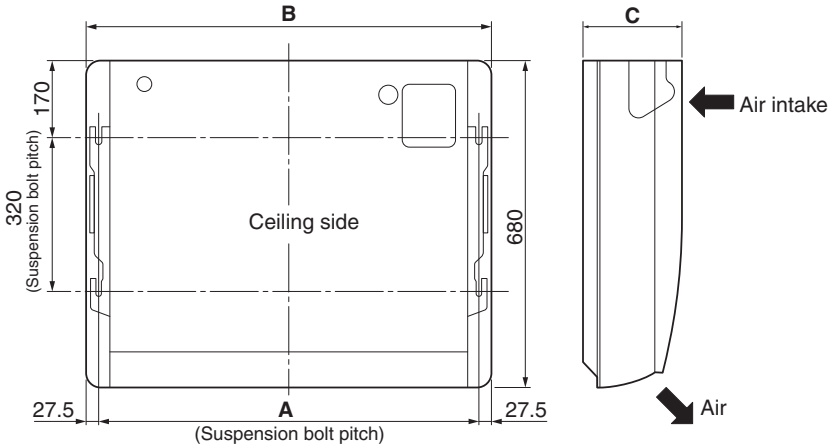

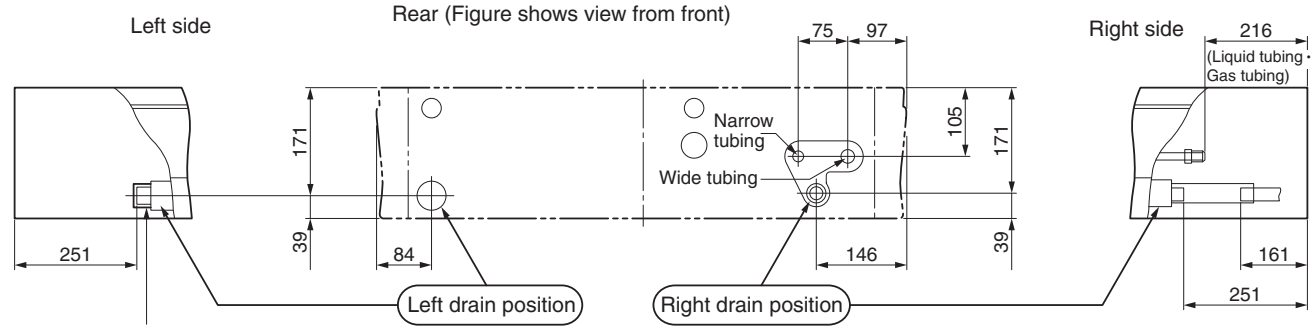

Closed with rubber stopper at time of shipment.

4

11. Ceiling Type (T1 Type)

11-4. Noise Criterion Curves

Both 50Hz and 60Hz
—●— Strong
— ○ - Weak

MODEL	: S-36MT1E5	
SOUND LEVEL	: STRONG	35 dB(A)
	HIGH	32 dB(A)
	LOW	30 dB(A)
CONDITION	: 1 m from front of outlet at height of 1.5 m	

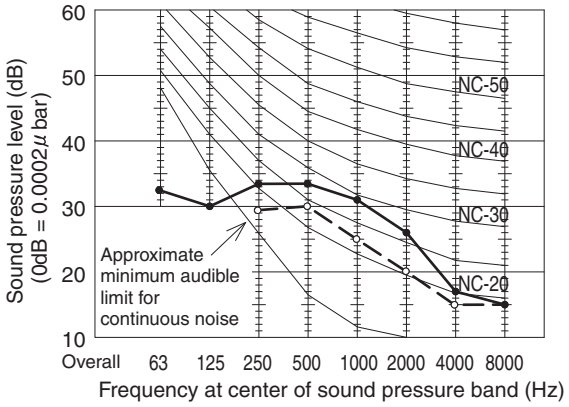

MODEL	: S-45MT1E5 / 56MT1E5	
SOUND LEVEL	: STRONG	36 dB(A)
	HIGH	33 dB(A)
	LOW	30 dB(A)
CONDITION	: 1 m from front of outlet at height of 1.5 m	

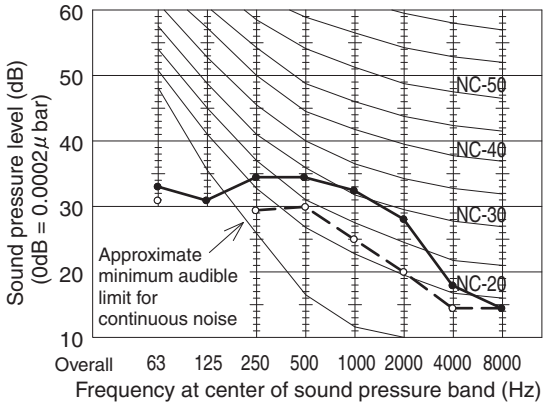

MODEL	: S-73MT1E5	
SOUND LEVEL	: STRONG	38 dB(A)
	HIGH	36 dB(A)
	LOW	33 dB(A)
CONDITION	: 1 m from front of outlet at height of 1.5 m	

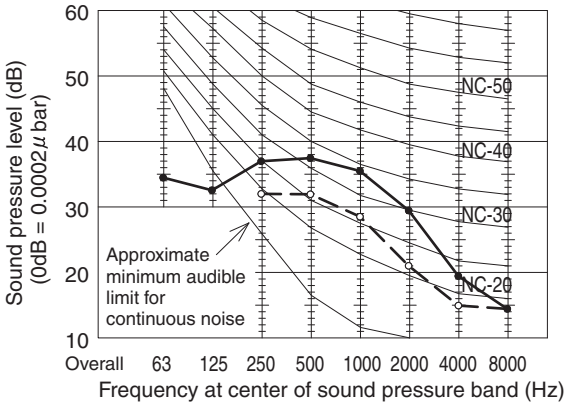

MODEL	: S-106MT1E5	
SOUND LEVEL	: STRONG	41 dB(A)
	HIGH	38 dB(A)
	LOW	35 dB(A)
CONDITION	: 1 m from front of outlet at height of 1.5 m	

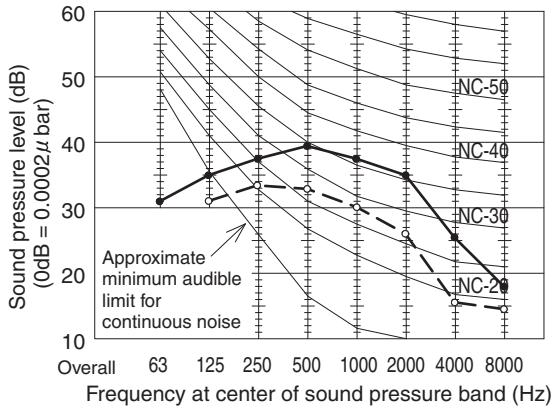

MODEL	: S-140MT1E5	
SOUND LEVEL	: STRONG	43 dB(A)
	HIGH	40 dB(A)
	LOW	37 dB(A)
CONDITION	: 1 m from front of outlet at height of 1.5 m	

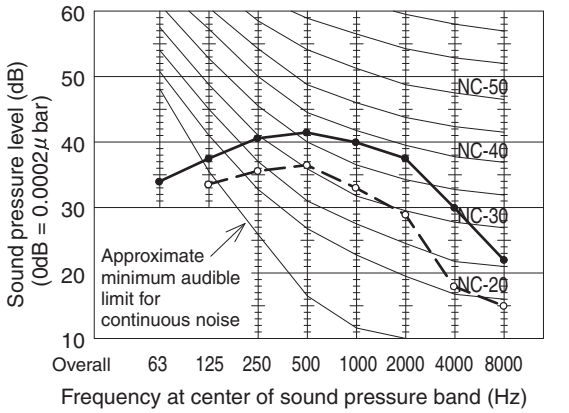

4

11. Ceiling Type (T1 Type)

11-5. Air Flow Distance / Temperature Chart

S-36MT1E5 / 45MT1E5 / 56MT1E5

Heating : Distribution of wind velocity

(Strong wind : Discharge angle approx.54°) (Room temperature approx.20 ℃)

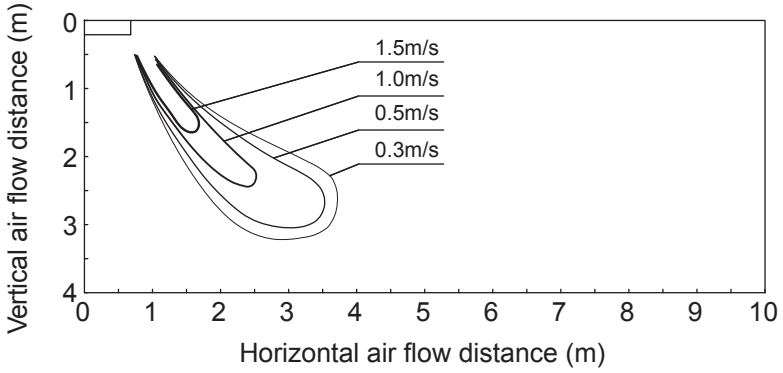

Heating : Distribution of temperature

(Strong wind : Discharge angle approx.54°) (Room temperature approx.20℃)

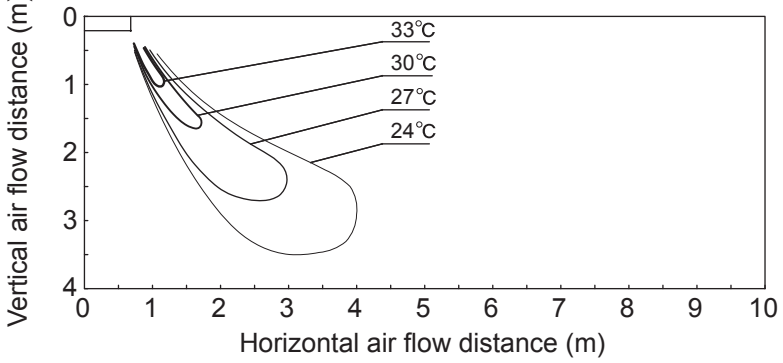

Cooling : Distribution of wind velocity

(Strong wind : Discharge angle approx. -7°) (Room temperature approx.27 ℃)

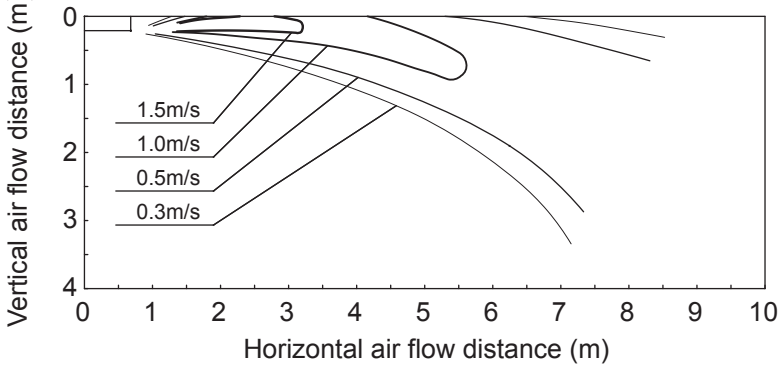

Cooling : Distribution of temperature

(Strong wind : Discharge angle approx. -7°) (Room temperature approx.27 ℃)

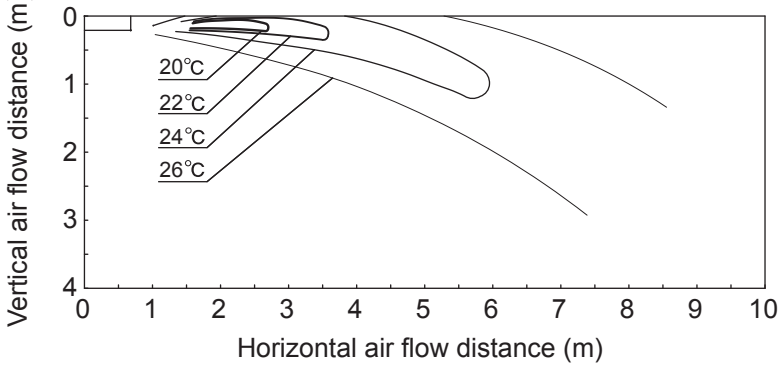

11. Ceiling Type (T1 Type)

S-73MT1E5 / 106MT1E5

Heating : Distribution of wind velocity

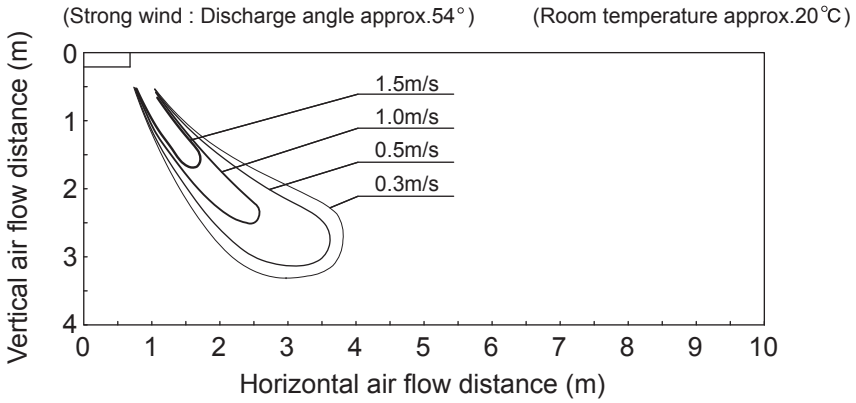

Heating : Distribution of temperature

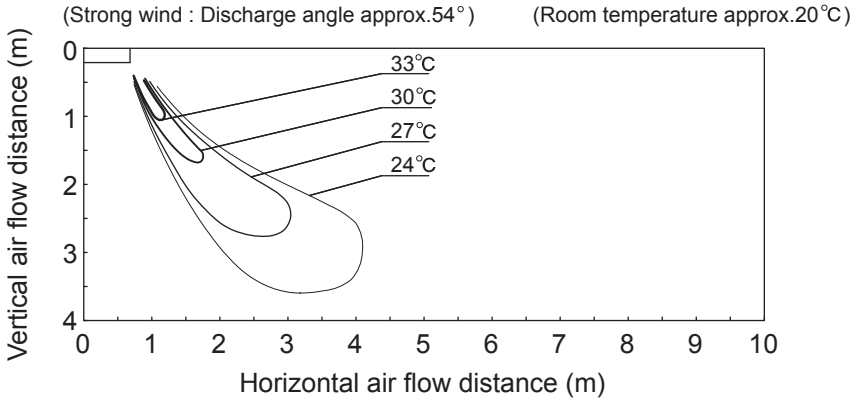

Cooling : Distribution of wind velocity

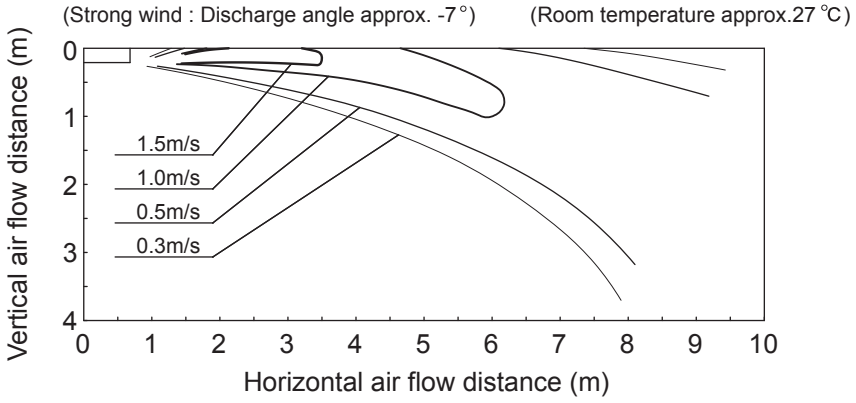

Cooling : Distribution of temperature

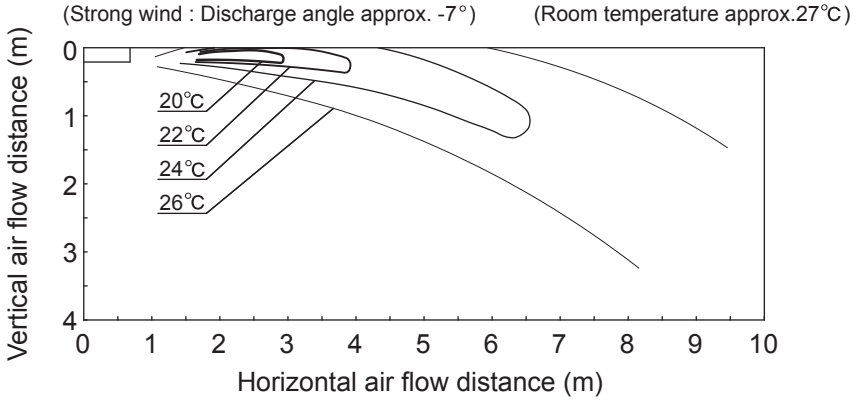

11. Ceiling Type (T1 Type)

S-140MT1E5

Heating : Distribution of wind velocity

(Strong wind : Discharge angle approx.54°) (Room temperature approx.20℃)

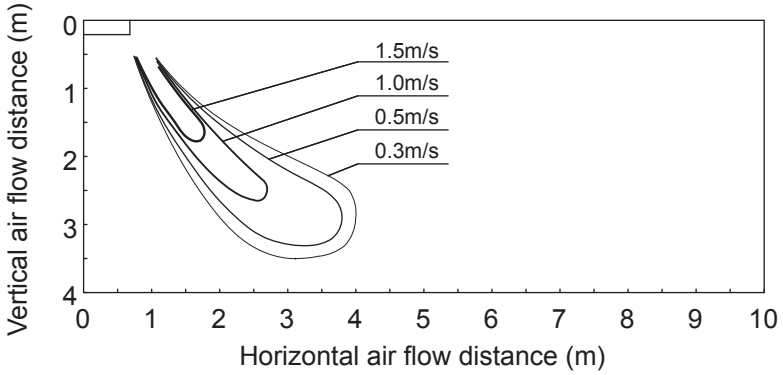

Heating : Distribution of temperature

(Strong wind : Discharge angle approx.54°) (Room temperature approx.20℃)

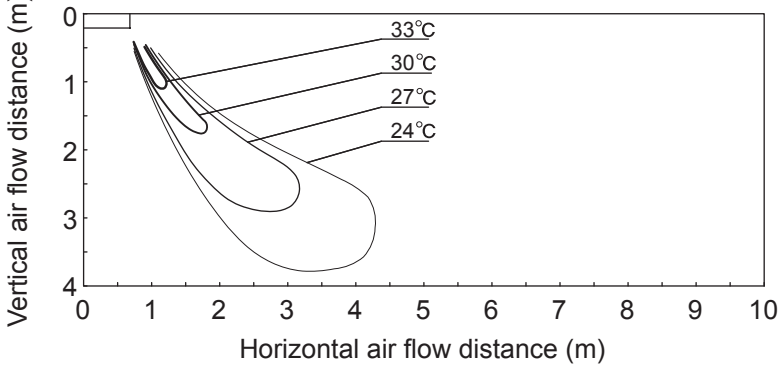

Cooling : Distribution of wind velocity

(Strong wind : Discharge angle approx. -7°) (Room temperature approx.27℃)

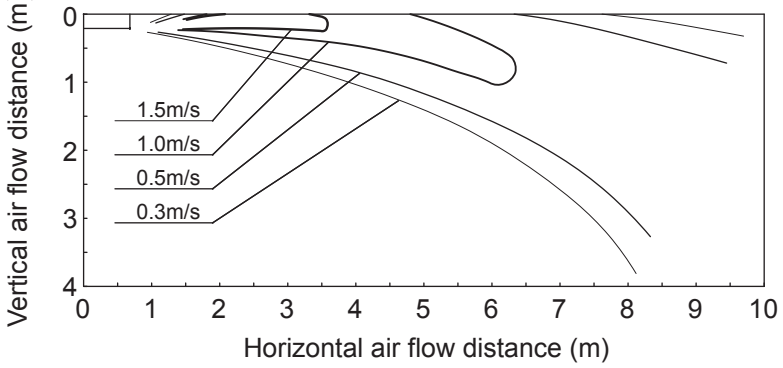

Cooling : Distribution of temperature

(Strong wind : Discharge angle approx. -7°) (Room temperature approx.27℃)

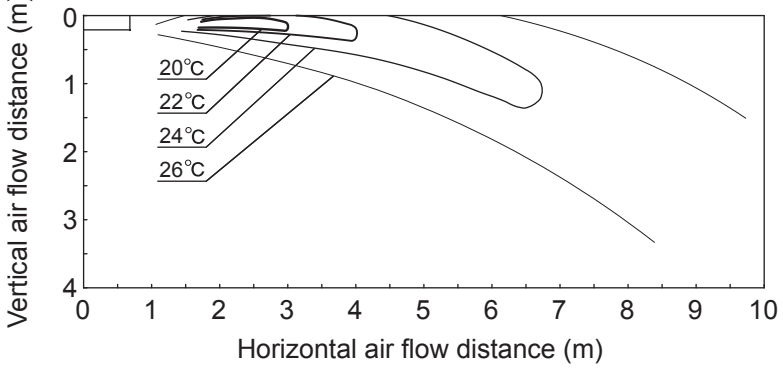

12. Low Silhouette Ducted Type (F1 Type)

12-1. Specifications

Unit specifications (A)

MODEL No.	Indoor Unit		S-22MF1E5					
POWER SOURCE			220 - 230 - 240 V, single-phase, 50/60 Hz					
PERFORMANCE			Cooling			Heating		
Capacity		kW	2.2			2.5		
		BTU / h	7,500			8,500		
Air circulation (Hi / Me / Lo)		m^3 / h	600 / 510 / 420					
Moisture removal (High)		Liters / h	0.8			–		
External static pressure (High)		Pa {mmAq}	49 {5}: At shipment 69 {7}: Using the booster cable					
ELECTRICAL RATINGS								
Voltage rating		V	220	230	240	220	230	240
Available voltage range		V	198 - 264			198 - 264		
Running amperes		A	0.45	0.46	0.47	0.40	0.41	0.42
Power input		W	94	100	106	82	88	94
Power factor		%	95	95	94	93	93	93
Max. starting amperes		A	1	1	1	1	1	1
FEATURES								
Controls			Microprocessor					
Timer			ON / OFF Timer (Max. 72 h)					
Fan speeds			3 and Automatic control					
Air filter			Long-life filter					
Refrigerant control			Electronic expansion valve					
Operation sound (Hi / Me / Lo)		dB-A	29 / 26 / 22					
Using the booster cable (Hi / Me / Lo)		dB-A	32 / 29 / 26					
Refrigerant tubing connections			Flare type					
Refrigerant tube diameter	Liquid tube	mm (in.)	6.35 (1 / 4)					
	Gas tube	mm (in.)	12.7 (1 / 2)					
Drain connection			25 A, OD32 mm					
Drain pump			Max. head 500 mm above drain connection					
Remote controller			Optional (Wired / Wireless)					
Refrigerant tubing kit / Accessories			Optional / Booster cable					
Color (Approximate value)			–					
DIMENSIONS & WEIGHT			Unit dimensions			Package dimensions		
Unit dimensions	Height	mm (in.)	310 (12-7 / 32)			325 (12-25 / 32)		
	Width	mm (in.)	700 (27-9 / 16)			975 (38-3 / 8)		
	Depth	mm (in.)	630 (24-13 / 16)			777 (30-19 / 32)		
Net weight		kg (lbs.)	24 (53)					
Shipping weight		kg (lbs.)	28 (62)					
Shipping volume		m^3 (cu.ft)	0.250 (8.8)					

DATA SUBJECT TO CHANGE WITHOUT NOTICE.

Rated conditions
Cooling: Indoor air temperature 27°C DB / 19°C WB; Outdoor air temperature 35°C DB
Heating: Indoor air temperature 20°C DB; Outdoor air temperature 7°C DB / 6°C WB

12. Low Silhouette Ducted Type (F1 Type)

Unit specifications (B)

MODEL No.	Indoor Unit		S-28MF1E5					
POWER SOURCE			220 - 230 - 240 V, single-phase, 50/60 Hz					
PERFORMANCE			Cooling			Heating		
Capacity		kW	2.8			3.2		
		BTU / h	9,600			11,000		
Air circulation (Hi / Me / Lo)		m^3 / h	600 / 510 / 420					
Moisture removal (High)		Liters / h	1.1			–		
External static pressure (High)		Pa {mmAq}	49 {5}: At shipment 69 {7}: Using the booster cable					
ELECTRICAL RATINGS								
Voltage rating		V	220	230	240	220	230	240
Available voltage range		V	198 - 264			198 - 264		
Running amperes		A	0.45	0.46	0.47	0.40	0.41	0.42
Power input		W	94	100	106	82	88	94
Power factor		%	95	95	94	93	93	93
Max. starting amperes		A	1	1	1	1	1	1
FEATURES								
Controls			Microprocessor					
Timer			ON / OFF Timer (Max. 72 h)					
Fan speeds			3 and Automatic control					
Air filter			Long-life filter					
Refrigerant control			Electronic expansion valve					
Operation sound (Hi / Me / Lo)		dB-A	29 / 26 / 22					
Using the booster cable (Hi / Me / Lo)		dB-A	32 / 29 / 26					
Refrigerant tubing connections			Flare type					
Refrigerant tube diameter	Liquid tube	mm (in.)	6.35 (1 / 4)					
	Gas tube	mm (in.)	12.7 (1 / 2)					
Drain connection			25 A, OD32 mm					
Drain pump			Max. head 500 mm above drain connection					
Remote controller			Optional (Wired / Wireless)					
Refrigerant tubing kit / Accessories			Optional / Booster cable					
Color (Approximate value)			–					
DIMENSIONS & WEIGHT			Unit dimensions			Package dimensions		
Unit dimensions	Height	mm (in.)	310 (12-7 / 32)			325 (12-25 / 32)		
	Width	mm (in.)	700 (27-9 / 16)			975 (38-3 / 8)		
	Depth	mm (in.)	630 (24-13 / 16)			777 (30-19 / 32)		
Net weight		kg (lbs.)	24 (53)					
Shipping weight		kg (lbs.)	28 (62)					
Shipping volume		m^3 (cu.ft)	0.250 (8.8)					

DATA SUBJECT TO CHANGE WITHOUT NOTICE.

Rated conditions
Cooling: Indoor air temperature 27°C DB / 19°C WB; Outdoor air temperature 35°C DB
Heating: Indoor air temperature 20°C DB; Outdoor air temperature 7°C DB / 6°C WB

12. Low Silhouette Ducted Type (F1 Type)

Unit specifications (C)

MODEL No.	Indoor Unit		S-36MF1E5					
POWER SOURCE			220 - 230 - 240 V, single-phase, 50/60 Hz					
PERFORMANCE			Cooling			Heating		
Capacity		kW	3.6			4.2		
		BTU / h	12,000			14,000		
Air circulation (Hi / Me / Lo)		m^3 / h	600 / 510 / 420					
Moisture removal (High)		Liters / h	1.8			–		
External static pressure (High)		Pa {mmAq}	49 {5}: At shipment 69 {7}: Using the booster cable					
ELECTRICAL RATINGS								
Voltage rating		V	220	230	240	220	230	240
Available voltage range		V	198 - 264			198 - 264		
Running amperes		A	0.45	0.46	0.47	0.40	0.41	0.42
Power input		W	94	100	106	82	88	94
Power factor		%	95	95	94	93	93	93
Max. starting amperes		A	1	1	1	1	1	1
FEATURES								
Controls			Microprocessor					
Timer			ON / OFF Timer (Max. 72 h)					
Fan speeds			3 and Automatic control					
Air filter			Long-life filter					
Refrigerant control			Electronic expansion valve					
Operation sound (Hi / Me / Lo)		dB-A	29 / 26 / 22					
Using the booster cable (Hi / Me / Lo)		dB-A	32 / 29 / 26					
Refrigerant tubing connections			Flare type					
Refrigerant tube diameter	Liquid tube	mm (in.)	6.35 (1 / 4)					
	Gas tube	mm (in.)	12.7 (1 / 2)					
Drain connection			25 A, OD32 mm					
Drain pump			Max. head 500 mm above drain connection					
Remote controller			Optional (Wired / Wireless)					
Refrigerant tubing kit / Accessories			Optional / Booster cable					
Color (Approximate value)			–					
DIMENSIONS & WEIGHT			Unit dimensions			Package dimensions		
Unit dimensions	Height	mm (in.)	310 (12-7 / 32)			325 (12-25 / 32)		
	Width	mm (in.)	700 (27-9 / 16)			975 (38-3 / 8)		
	Depth	mm (in.)	630 (24-13 / 16)			777 (30-19 / 32)		
Net weight		kg (lbs.)	24 (53)					
Shipping weight		kg (lbs.)	28 (62)					
Shipping volume		m^3 (cu.ft)	0.250 (8.8)					

DATA SUBJECT TO CHANGE WITHOUT NOTICE.

Rated conditions
Cooling: Indoor air temperature 27°C DB / 19°C WB; Outdoor air temperature 35°C DB
Heating: Indoor air temperature 20°C DB; Outdoor air temperature 7°C DB / 6°C WB

12. Low Silhouette Ducted Type (F1 Type)

Unit specifications (D)

MODEL No.	Indoor Unit		S-45MF1E5					
POWER SOURCE			220 - 230 - 240 V, single-phase, 50/60 Hz					
PERFORMANCE			Cooling			Heating		
Capacity		kW	4.5			5.0		
		BTU / h	15,000			17,000		
Air circulation (Hi / Me / Lo)		m^3 / h	720 / 630 / 540					
Moisture removal (High)		Liters / h	3.0			–		
External static pressure (High)		Pa {mmAq}	40 {4.1}: At shipment 62 {6.3}: Using the booster cable					
ELECTRICAL RATINGS								
Voltage rating		V	220	230	240	220	230	240
Available voltage range		V	198 - 264			198 - 264		
Running amperes		A	0.44	0.45	0.46	0.39	0.40	0.41
Power input		W	96	102	109	84	90	97
Power factor		%	99	99	99	98	98	99
Max. starting amperes		A	1	1	1	1	1	1
FEATURES								
Controls			Microprocessor					
Timer			ON / OFF Timer (Max. 72 h)					
Fan speeds			3 and Automatic control					
Air filter			Long-life filter					
Refrigerant control			Electronic expansion valve					
Operation sound (Hi / Me / Lo)		dB-A	30 / 28 / 25					
Using the booster cable (Hi / Me / Lo)		dB-A	33 / 30 / 28					
Refrigerant tubing connections			Flare type					
Refrigerant tube diameter	Liquid tube	mm (in.)	6.35 (1 / 4)					
	Gas tube	mm (in.)	12.7 (1 / 2)					
Drain connection			25 A, OD32 mm					
Drain pump			Max. head 500 mm above drain connection					
Remote controller			Optional (Wired / Wireless)					
Refrigerant tubing kit / Accessories			Optional / Booster cable					
Color (Approximate value)			–					
DIMENSIONS & WEIGHT			Unit dimensions			Package dimensions		
Unit dimensions	Height	mm (in.)	310 (12-7 / 32)			325 (12-25 / 32)		
	Width	mm (in.)	700 (27-9 / 16)			975 (38-3 / 8)		
	Depth	mm (in.)	630 (24-13 / 16)			777 (30-19 / 32)		
Net weight		kg (lbs.)	25 (55)					
Shipping weight		kg (lbs.)	29 (64)					
Shipping volume		m^3 (cu.ft)	0.250 (8.8)					

DATA SUBJECT TO CHANGE WITHOUT NOTICE.

Rated conditions
Cooling: Indoor air temperature 27°C DB / 19°C WB; Outdoor air temperature 35°C DB
Heating: Indoor air temperature 20°C DB; Outdoor air temperature 7°C DB / 6°C WB

12. Low Silhouette Ducted Type (F1 Type)

Unit specifications (E)

MODEL No.	Indoor Unit		S-56MF1E5					
POWER SOURCE			220 - 230 - 240 V, single-phase, 50/60 Hz					
PERFORMANCE			Cooling			Heating		
Capacity		kW	5.6			6.3		
		BTU / h	19,000			21,000		
Air circulation (Hi / Me / Lo)		m^3 / h	720 / 630 / 540					
Moisture removal (High)		Liters / h	3.0			–		
External static pressure (High)		Pa {mmAq}	40 {4.1}: At shipment 62 {6.3}: Using the booster cable					
ELECTRICAL RATINGS								
Voltage rating		V	220	230	240	220	230	240
Available voltage range		V	198 - 264			198 - 264		
Running amperes		A	0.44	0.45	0.46	0.39	0.40	0.41
Power input		W	96	102	109	84	90	97
Power factor		%	99	99	99	98	98	99
Max. starting amperes		A	1	1	1	1	1	1
FEATURES								
Controls			Microprocessor					
Timer			ON / OFF Timer (Max. 72 h)					
Fan speeds			3 and Automatic control					
Air filter			Long-life filter					
Refrigerant control			Electronic expansion valve					
Operation sound (Hi / Me / Lo)		dB-A	30 / 28 / 25					
Using the booster cable (Hi / Me / Lo)		dB-A	33 / 30 / 28					
Refrigerant tubing connections			Flare type					
Refrigerant tube diameter	Liquid tube	mm (in.)	6.35 (1 / 4)					
	Gas tube	mm (in.)	12.7 (1 / 2)					
Drain connection			25 A, OD32 mm					
Drain pump			Max. head 500 mm above drain connection					
Remote controller			Optional (Wired / Wireless)					
Refrigerant tubing kit / Accessories			Optional / Booster cable					
Color (Approximate value)			–					
DIMENSIONS & WEIGHT			Unit dimensions			Package dimensions		
Unit dimensions	Height	mm (in.)	310 (12-7 / 32)			325 (12-25 / 32)		
	Width	mm (in.)	700 (27-9 / 16)			975 (38-3 / 8)		
	Depth	mm (in.)	630 (24-13 / 16)			777 (30-19 / 32)		
Net weight		kg (lbs.)	25 (55)					
Shipping weight		kg (lbs.)	29 (64)					
Shipping volume		m^3 (cu.ft)	0.250 (8.8)					

DATA SUBJECT TO CHANGE WITHOUT NOTICE.

Rated conditions
Cooling: Indoor air temperature 27°C DB / 19°C WB; Outdoor air temperature 35°C DB
Heating: Indoor air temperature 20°C DB; Outdoor air temperature 7°C DB / 6°C WB

12. Low Silhouette Ducted Type (F1 Type)

Unit specifications (F)

MODEL No.	Indoor Unit		S-73MF1E5					
POWER SOURCE			220 - 230 - 240 V, single-phase, 50/60 Hz					
PERFORMANCE			Cooling			Heating		
Capacity		kW	7.3			8.0		
		BTU / h	25,000			27,000		
Air circulation (Hi / Me / Lo)		m^3 / h	1,080 / 900 / 780					
Moisture removal (High)		Liters / h	3.5			–		
External static pressure (High)		Pa {mmAq}	50 {5.1}: At shipment 92 {9.4}: Using the booster cable					
ELECTRICAL RATINGS								
Voltage rating		V	220	230	240	220	230	240
Available voltage range		V	198 - 264			198 - 264		
Running amperes		A	0.83	0.86	0.89	0.78	0.81	0.84
Power input		W	180	195	210	168	183	198
Power factor		%	99	99	98	98	98	98
Max. starting amperes		A	1	1	1	1	1	1
FEATURES								
Controls			Microprocessor					
Timer			ON / OFF Timer (Max. 72 h)					
Fan speeds			3 and Automatic control					
Air filter			Long-life filter					
Refrigerant control			Electronic expansion valve					
Operation sound (Hi / Me / Lo)		dB-A	34 / 30 / 27					
Using the booster cable (Hi / Me / Lo)		dB-A	38 / 34 / 30					
Refrigerant tubing connections			Flare type					
Refrigerant tube diameter	Liquid tube	mm (in.)	9.52 (3 / 8)					
	Gas tube	mm (in.)	15.88 (5 / 8)					
Drain connection			25 A, OD32 mm					
Drain pump			Max. head 500 mm above drain connection					
Remote controller			Optional (Wired / Wireless)					
Refrigerant tubing kit / Accessories			Optional / Booster cable					
Color (Approximate value)			–					
DIMENSIONS & WEIGHT			Unit dimensions			Package dimensions		
Unit dimensions	Height	mm (in.)	310 (12-7 / 32)			325 (12-25 / 32)		
	Width	mm (in.)	1000 (39-3 / 8)			1275 (50-3 / 16)		
	Depth	mm (in.)	630 (24-13 / 16)			777 (30-19 / 32)		
Net weight		kg (lbs.)	32 (71)					
Shipping weight		kg (lbs.)	37 (82)					
Shipping volume		m^3 (cu.ft)	0.334 (11.8)					

DATA SUBJECT TO CHANGE WITHOUT NOTICE.

Rated conditions
Cooling: Indoor air temperature 27°C DB / 19°C WB; Outdoor air temperature 35°C DB
Heating: Indoor air temperature 20°C DB; Outdoor air temperature 7°C DB / 6°C WB

12. Low Silhouette Ducted Type (F1 Type)

Unit specifications (G)

MODEL No.	Indoor Unit		S-90MF1E5					
POWER SOURCE			220 - 230 - 240 V, single-phase, 50/60 Hz					
PERFORMANCE			Cooling			Heating		
Capacity		kW	9.0			10.0		
		BTU / h	30,000			34,000		
Air circulation (Hi / Me / Lo)		m^3 / h	1,200 / 1,020 / 840					
Moisture removal (High)		Liters / h	3.5			–		
External static pressure (High)		Pa {mmAq}	50 {5.1}: At shipment 92 {9.4}: Using the booster cable					
ELECTRICAL RATINGS								
Voltage rating		V	220	230	240	220	230	240
Available voltage range		V	198 - 264			198 - 264		
Running amperes		A	0.88	0.91	0.94	0.84	0.87	0.90
Power input		W	187	203	219	176	191	207
Power factor		%	99	99	98	98	98	98
Max. starting amperes		A	1	1	1	1	1	1
FEATURES								
Controls			Microprocessor					
Timer			ON / OFF Timer (Max. 72 h)					
Fan speeds			3 and Automatic control					
Air filter			Long-life filter					
Refrigerant control			Electronic expansion valve					
Operation sound (Hi / Me / Lo)		dB-A	34 / 30 / 27					
Using the booster cable (Hi / Me / Lo)		dB-A	38 / 34 / 30					
Refrigerant tubing connections			Flare type					
Refrigerant tube diameter	Liquid tube	mm (in.)	9.52 (3 / 8)					
	Gas tube	mm (in.)	15.88 (5 / 8)					
Drain connection			25 A, OD32 mm					
Drain pump			Max. head 500 mm above drain connection					
Remote controller			Optional (Wired / Wireless)					
Refrigerant tubing kit / Accessories			Optional / Booster cable					
Color (Approximate value)			–					
DIMENSIONS & WEIGHT			Unit dimensions			Package dimensions		
Unit dimensions	Height	mm (in.)	310 (12-7 / 32)			325 (12-25 / 32)		
	Width	mm (in.)	1000 (39-3 / 8)			1275 (50-3 / 16)		
	Depth	mm (in.)	630 (24-13 / 16)			777 (30-19 / 32)		
Net weight		kg (lbs.)	32 (71)					
Shipping weight		kg (lbs.)	37 (82)					
Shipping volume		m^3 (cu.ft)	0.334 (11.8)					

DATA SUBJECT TO CHANGE WITHOUT NOTICE.

Rated conditions
Cooling: Indoor air temperature 27°C DB / 19°C WB; Outdoor air temperature 35°C DB
Heating: Indoor air temperature 20°C DB; Outdoor air temperature 7°C DB / 6°C WB

12. Low Silhouette Ducted Type (F1 Type)

Unit specifications (H)

MODEL No.	Indoor Unit		S-106MF1E5					
POWER SOURCE			220 - 230 - 240 V, single-phase, 50/60 Hz					
PERFORMANCE			Cooling			Heating		
Capacity		kW	10.6			11.4		
		BTU / h	36,000			39,000		
Air circulation (Hi / Me / Lo)		m^3 / h	1,800 / 1,560 / 1,260					
Moisture removal (High)		Liters / h	4.2			–		
External static pressure (High)		Pa {mmAq}	79 {8.1}: At shipment 122 {12.4}: Using the booster cable					
ELECTRICAL RATINGS								
Voltage rating		V	220	230	240	220	230	240
Available voltage range		V	198 - 264			198 - 264		
Running amperes		A	1.44	1.45	1.46	1.39	1.40	1.41
Power input		W	312	327	342	300	315	330
Power factor		%	98	98	98	98	98	98
Max. starting amperes		A	2	2	2	2	2	2
FEATURES								
Controls			Microprocessor					
Timer			ON / OFF Timer (Max. 72 h)					
Fan speeds			3 and Automatic control					
Air filter			Long-life filter					
Refrigerant control			Electronic expansion valve					
Operation sound (Hi / Me / Lo)		dB-A	38 / 33 / 31					
Using the booster cable (Hi / Me / Lo)		dB-A	42 / 38 / 33					
Refrigerant tubing connections			Flare type					
Refrigerant tube diameter	Liquid tube	mm (in.)	9.52 (3 / 8)					
	Gas tube	mm (in.)	15.88 (5 / 8)					
Drain connection			25 A, OD32 mm					
Drain pump			Max. head 500 mm above drain connection					
Remote controller			Optional (Wired / Wireless)					
Refrigerant tubing kit / Accessories			Optional / Booster cable					
Color (Approximate value)			–					
DIMENSIONS & WEIGHT			Unit dimensions			Package dimensions		
Unit dimensions	Height	mm (in.)	310 (12-7 / 32)			330 (13)		
	Width	mm (in.)	1480 (58-9 / 32)			1755 (69-3 / 32)		
	Depth	mm (in.)	630 (24-13 / 16)			777 (30-19 / 32)		
Net weight		kg (lbs.)	47 (104)					
Shipping weight		kg (lbs.)	52 (115)					
Shipping volume		m^3 (cu.ft)	0.468 (16.5)					

DATA SUBJECT TO CHANGE WITHOUT NOTICE.

Rated conditions
Cooling: Indoor air temperature 27°C DB / 19°C WB; Outdoor air temperature 35°C DB
Heating: Indoor air temperature 20°C DB; Outdoor air temperature 7°C DB / 6°C WB

12. Low Silhouette Ducted Type (F1 Type)

Unit specifications (I)

MODEL No.	Indoor Unit		S-140MF1E5					
POWER SOURCE			220 - 230 - 240 V, single-phase, 50/60 Hz					
PERFORMANCE			Cooling			Heating		
Capacity		kW	14.0			16.0		
		BTU / h	47,800			54,600		
Air circulation (Hi / Me / Lo)		m^3 / h	1,980 / 1,800 / 1,500					
Moisture removal (High)		Liters / h	6.6			–		
External static pressure (High)		Pa {mmAq}	78 {8.0}: At shipment 113 {11.5}: Using the booster cable					
ELECTRICAL RATINGS								
Voltage rating		V	220	230	240	220	230	240
Available voltage range		V	198 - 264			198 - 264		
Running amperes		A	1.42	1.43	1.44	1.36	1.37	1.38
Power input		W	308	325	341	296	313	329
Power factor		%	99	99	99	99	99	99
Max. starting amperes		A	2	2	2	2	2	2
FEATURES								
Controls			Microprocessor					
Timer			ON / OFF Timer (Max. 72 h)					
Fan speeds			3 and Automatic control					
Air filter			Long-life filter					
Refrigerant control			Electronic expansion valve					
Operation sound (Hi / Me / Lo)		dB-A	40 / 37 / 33					
Using the booster cable (Hi / Me / Lo)		dB-A	44 / 40 / 37					
Refrigerant tubing connections			Flare type					
Refrigerant tube diameter	Liquid tube	mm (in.)	9.52 (3 / 8)					
	Gas tube	mm (in.)	15.88 (5 / 8)					
Drain connection			25 A, OD32 mm					
Drain pump			Max. head 500 mm above drain connection					
Remote controller			Optional (Wired / Wireless)					
Refrigerant tubing kit / Accessories			Optional / Booster cable					
Color (Approximate value)			–					
DIMENSIONS & WEIGHT			Unit dimensions			Package dimensions		
Unit dimensions	Height	mm (in.)	310 (12-7 / 32)			330 (13)		
	Width	mm (in.)	1480 (58-9 / 32)			1755 (69-3 / 32)		
	Depth	mm (in.)	630 (24-13 / 16)			777 (30-19 / 32)		
Net weight		kg (lbs.)	47 (104)					
Shipping weight		kg (lbs.)	52 (115)					
Shipping volume		m^3 (cu.ft)	0.468 (16.5)					

DATA SUBJECT TO CHANGE WITHOUT NOTICE.

Rated conditions
Cooling: Indoor air temperature 27°C DB / 19°C WB; Outdoor air temperature 35°C DB
Heating: Indoor air temperature 20°C DB; Outdoor air temperature 7°C DB / 6°C WB

12. Low Silhouette Ducted Type (F1 Type)

Unit specifications (J)

MODEL No.	Indoor Unit		S-160MF1E5					
POWER SOURCE			220 - 230 - 240 V, single-phase, 50/60 Hz					
PERFORMANCE			Cooling			Heating		
Capacity		kW	16.0			18.0		
		BTU / h	54,600			61,500		
Air circulation (Hi / Me / Lo)		m^3 / h	1,980 / 1,800 / 1,500					
Moisture removal (High)		Liters / h	6.6			–		
External static pressure (High)		Pa {mmAq}	78 {8.0}: At shipment 113 {11.5}: Using the booster cable					
ELECTRICAL RATINGS								
Voltage rating		V	220	230	240	220	230	240
Available voltage range		V	198 - 264			198 - 264		
Running amperes		A	1.42	1.43	1.44	1.36	1.37	1.38
Power input		W	308	325	341	296	313	329
Power factor		%	99	99	99	99	99	99
Max. starting amperes		A	2	2	2	2	2	2
FEATURES								
Controls			Microprocessor					
Timer			ON / OFF Timer (Max. 72 h)					
Fan speeds			3 and Automatic control					
Air filter			Long-life filter					
Refrigerant control			Electronic expansion valve					
Operation sound (Hi / Me / Lo)		dB-A	40 / 37 / 33					
Using the booster cable (Hi / Me / Lo)		dB-A	44 / 40 / 37					
Refrigerant tubing connections			Flare type					
Refrigerant tube diameter	Liquid tube	mm (in.)	9.52 (3 / 8)					
	Gas tube	mm (in.)	15.88 (5 / 8)					
Drain connection			25 A, OD32 mm					
Drain pump			Max. head 500 mm above drain connection					
Remote controller			Optional (Wired / Wireless)					
Refrigerant tubing kit / Accessories			Optional / Booster cable					
Color (Approximate value)			–					
DIMENSIONS & WEIGHT			Unit dimensions			Package dimensions		
Unit dimensions	Height	mm (in.)	310 (12-7 / 32)			330 (13)		
	Width	mm (in.)	1480 (58-9 / 32)			1755 (69-3 / 32)		
	Depth	mm (in.)	630 (24-13 / 16)			777 (30-19 / 32)		
Net weight		kg (lbs.)	47 (104)					
Shipping weight		kg (lbs.)	52 (115)					
Shipping volume		m^3 (cu.ft)	0.468 (16.5)					

DATA SUBJECT TO CHANGE WITHOUT NOTICE.

Rated conditions
Cooling: Indoor air temperature 27°C DB / 19°C WB; Outdoor air temperature 35°C DB
Heating: Indoor air temperature 20°C DB; Outdoor air temperature 7°C DB / 6°C WB

12. Low Silhouette Ducted Type (F1 Type)

12-2. Major Component Specifications

Indoor unit (A)

MODEL No.			S-22MF1E5
Power source			220 - 230 - 240 V, single-phase, 50/60 Hz
Controller P.C.B. Ass'y			CR-UXRP71B-P (Microprocessor)
Fan (Number...diameter)		mm	Centrifugal (1...ø190)
Fan motor			
	Model...Nominal output	W	SFG4X-51C3P...50 W
	Power source		220 - 230 - 240 V / single-phase / 50 Hz
	No. of pole...r.p.m. (230V, High)	rpm	4P... 834
	Coil resistance (Ambient temperature 20°C)	Ω	BRN – WHT : 76.88 WHT – VLT : 12.66 VLT – ORG : 21.01 ORG – YEL : 14.42 YEL – BLK : 26.76 BLK – PNK : 25.17
	Safety device		
	Operating temperature	Open °C	130 ± 5
		Close °C	(115 ± 5)
	Run capacitor	VAC, μF	450 VAC, 1.5 μF
Electronic expansion valve			
	Coil		UKV-U031E
	Coil resistance (at 20°C)	Ω	ORG – GRY : 46 RED – GRY : 46 YEL – GRY : 46 BLK – GRY : 46
	Valve body		UKV-18D31
Heat exchanger			
	Coil		Aluminium plate fin / Copper tube
	Rows...fin pitch	mm	2...1.5
	Face area	m^2	0.113
Drain pump			PLD-12230STHU-1
	Rated	V, W	AC 230 V, 50 Hz, 12 W
	Height from unit bottom & capacity		500 mm, 400 cc/min

12. Low Silhouette Ducted Type (F1 Type)

Indoor unit (B)

MODEL No.			**S-28MF1E5**
Power source			220 - 230 - 240 V, single-phase, 50/60 Hz
Controller P.C.B. Ass'y			CR-UXRP71B-P (Microprocessor)
Fan (Number...diameter)		mm	Centrifugal (1...ø190)
Fan motor			
	Model...Nominal output	W	SFG4X-51C3P...50 W
	Power source		220 - 230 - 240 V / single-phase / 50 Hz
	No. of pole...r.p.m. (230V, High)	rpm	4P... 834
	Coil resistance (Ambient temperature 20°C)	Ω	BRN – WHT : 76.88 ORG – YEL : 14.42 WHT – VLT : 12.66 YEL – BLK : 26.76 VLT – ORG : 21.01 BLK – PNK : 25.17
	Safety device		
	Operating temperature	Open °C	130 ± 5
		Close °C	(115 ± 5)
	Run capacitor	VAC, μF	450 VAC, 1.5 μF
Electronic expansion valve			
	Coil		UKV-U031E
	Coil resistance (at 20°C)	Ω	ORG – GRY : 46 YEL – GRY : 46 RED – GRY : 46 BLK – GRY : 46
	Valve body		UKV-18D31
Heat exchanger			
	Coil		Aluminium plate fin / Copper tube
	Rows...fin pitch	mm	2...1.5
	Face area	m^2	0.113
Drain pump			PLD-12230STHU-1
	Rated	V, W	AC 230 V, 50 Hz, 12 W
	Height from unit bottom & capacity		500 mm, 400 cc/min

4

12. Low Silhouette Ducted Type (F1 Type)

Indoor unit (C)

MODEL No.			**S-36MF1E5**
Power source			220 - 230 - 240 V, single-phase, 50/60 Hz
Controller P.C.B. Ass'y			CR-UXRP71B-P (Microprocessor)
Fan (Number...diameter)		mm	Centrifugal (1...ø190)
Fan motor			
	Model...Nominal output	W	SFG4X-51C3P...50 W
	Power source		220 - 230 - 240 V / single-phase / 50 Hz
	No. of pole...r.p.m. (230V, High)	rpm	4P... 834
	Coil resistance (Ambient temperature 20°C)	Ω	BRN – WHT : 76.88 ORG – YEL : 14.42 WHT – VLT : 12.66 YEL – BLK : 26.76 VLT – ORG : 21.01 BLK – PNK : 25.17
	Safety device		
	Operating temperature	Open °C	130 ± 5
		Close °C	(115 ± 5)
	Run capacitor	VAC, μF	450 VAC, 1.5 μF
Electronic expansion valve			
	Coil		UKV-U031E
	Coil resistance (at 20°C)	Ω	ORG – GRY : 46 YEL – GRY : 46 RED – GRY : 46 BLK – GRY : 46
	Valve body		UKV-18D31
Heat exchanger			
	Coil		Aluminium plate fin / Copper tube
	Rows...fin pitch	mm	2...1.5
	Face area	m^2	0.113
Drain pump			PLD-12230STHU-1
	Rated	V, W	AC 230 V, 50 Hz, 12 W
	Height from unit bottom & capacity		500 mm, 400 cc/min

4

12. Low Silhouette Ducted Type (F1 Type)

Indoor unit (D)

MODEL No.			**S-45MF1E5**
Power source			220 - 230 - 240 V, single-phase, 50/60 Hz
Controller P.C.B. Ass'y			CR-UXRP71B-P (Microprocessor)
Fan (Number...diameter)		mm	Centrifugal (1...ø190)
Fan motor			
	Model...Nominal output	W	SFG4X-51C3P...50 W
	Power source		220 - 230 - 240 V / single-phase / 50 Hz
	No. of pole...r.p.m. (230V, High)	rpm	4P... 1,191
	Coil resistance (Ambient temperature 20°C)	Ω	BRN – WHT : 76.88 ORG – YEL : 14.42 WHT – VLT : 12.66 YEL – BLK : 26.76 VLT – ORG : 21.01 BLK – PNK : 25.17
	Safety device		
	Operating temperature	Open °C	130 ± 5
		Close °C	(115 ± 5)
	Run capacitor	VAC, μF	450 VAC, 2.0 μF
Electronic expansion valve			
	Coil		UKV-U031E
	Coil resistance (at 20°C)	Ω	ORG – GRY : 46 YEL – GRY : 46 RED – GRY : 46 BLK – GRY : 46
	Valve body		UKV-25D32
Heat exchanger			
	Coil		Aluminium plate fin / Copper tube
	Rows...fin pitch	mm	3...1.5
	Face area	m^2	0.113
Drain pump			PLD-12230STHU-1
	Rated	V, W	AC 230 V, 50 Hz, 12 W
	Height from unit bottom & capacity		500 mm, 400 cc/min

4

12. Low Silhouette Ducted Type (F1 Type)

Indoor unit (E)

MODEL No.			**S-56MF1E5**
Power source			220 - 230 - 240 V, single-phase, 50/60 Hz
Controller P.C.B. Ass'y			CR-UXRP71B-P (Microprocessor)
Fan (Number...diameter)		mm	Centrifugal (1...ø190)
Fan motor			
	Model...Nominal output	W	SFG4X-51C3P...50 W
	Power source		220 - 230 - 240 V / single-phase / 50 Hz
	No. of pole...r.p.m. (230V, High)	rpm	4P... 1,191
	Coil resistance (Ambient temperature 20°C)	Ω	BRN – WHT : 76.88 ORG – YEL : 14.42 WHT – VLT : 12.66 YEL – BLK : 26.76 VLT – ORG : 21.01 BLK – PNK : 25.17
	Safety device		
	Operating temperature	Open °C	130 ± 5
		Close °C	(115 ± 5)
	Run capacitor	VAC, μF	450 VAC, 2.0 μF
Electronic expansion valve			
	Coil		UKV-U031E
	Coil resistance (at 20°C)	Ω	ORG – GRY : 46 YEL – GRY : 46 RED – GRY : 46 BLK – GRY : 46
	Valve body		UKV-25D32
Heat exchanger			
	Coil		Aluminium plate fin / Copper tube
	Rows...fin pitch	mm	3...1.5
	Face area	m^2	0.113
Drain pump			PLD-12230STHU-1
	Rated	V, W	AC 230 V, 50 Hz, 12 W
	Height from unit bottom & capacity		500 mm, 400 cc/min

4

12. Low Silhouette Ducted Type (F1 Type)

Indoor unit (F)

MODEL No.			**S-73MF1E5**
Power source			220 - 230 - 240 V, single-phase, 50/60 Hz
Controller P.C.B. Ass'y			CR-UXRP71B-P (Microprocessor)
Fan (Number...diameter)		mm	Centrifugal (2...ø190)
Fan motor			
	Model...Nominal output	W	KFG4X-71D5P-S...70 W
	Power source		220 - 230 - 240 V / single-phase / 50 Hz
	No. of pole...r.p.m. (230V, High)	rpm	4P... 1,063
	Coil resistance (Ambient temperature 20°C)	Ω	BRN – WHT : 74.72 WHT – VLT : 19.14 VLT – ORG : 10.52 ORG – YEL : 9.588 YEL – BLK : 10.52 BLK – PNK : 21.72
	Safety device		
	Operating temperature	Open °C	130 ± 5
		Close °C	(115 ± 5)
	Run capacitor	VAC, μF	450 VAC, 5.0 μF
Electronic expansion valve			
	Coil		UKV-U031E
	Coil resistance (at 20°C)	Ω	ORG – GRY : 46 RED – GRY : 46 YEL – GRY : 46 BLK – GRY : 46
	Valve body		UKV-25D32
Heat exchanger			
	Coil		Aluminium plate fin / Copper tube
	Rows...fin pitch	mm	3...1.5
	Face area	m^2	0.189
Drain pump			PLD-12230STHU-1
	Rated	V, W	AC 230 V, 50 Hz, 12 W
	Height from unit bottom & capacity		500 mm, 400 cc/min

4

12. Low Silhouette Ducted Type (F1 Type)

Indoor unit (G)

MODEL No.			**S-90MF1E5**
Power source			220 - 230 - 240 V, single-phase, 50/60 Hz
Controller P.C.B. Ass'y			CR-UXRP71B-P (Microprocessor)
Fan (Number...diameter)		mm	Centrifugal (2...ø190)
Fan motor			
	Model...Nominal output	W	KFG4X-71D5P-S...70 W
	Power source		220 - 230 - 240 V / single-phase / 50 Hz
	No. of pole...r.p.m. (230V, High)	rpm	4P... 1,063
	Coil resistance (Ambient temperature 20°C)	Ω	BRN – WHT : 74.72 WHT – VLT : 19.14 VLT – ORG : 10.52 ORG – YEL : 9.588 YEL – BLK : 10.52 BLK – PNK : 21.72
	Safety device		
	Operating temperature	Open °C	130 ± 5
		Close °C	(115 ± 5)
	Run capacitor	VAC, μF	450 VAC, 5.0 μF
Electronic expansion valve			
	Coil		UKV-U031E
	Coil resistance (at 20°C)	Ω	ORG – GRY : 46 RED – GRY : 46 YEL – GRY : 46 BLK – GRY : 46
	Valve body		UKV-30D33
Heat exchanger			
	Coil		Aluminium plate fin / Copper tube
	Rows...fin pitch	mm	3...1.5
	Face area	m^2	0.189
Drain pump			PLD-12230STHU-1
	Rated	V, W	AC 230 V, 50 Hz, 12 W
	Height from unit bottom & capacity		500 mm, 400 cc/min

12. Low Silhouette Ducted Type (F1 Type)

Indoor unit (H)

MODEL No.			**S-106MF1E5**
Power source			220 - 230 - 240 V, single-phase, 50/60 Hz
Controller P.C.B. Ass'y			CR-UXRP71B-P (Microprocessor)
Fan (Number...diameter)		mm	Centrifugal (3...ø190)
Fan motor			
	Model...Nominal output	W	KFC4X-141D5P-S...160 W
	Power source		220 - 230 - 240 V / single-phase / 50 Hz
	No. of pole...r.p.m. (230V, High)	rpm	4P... 1,207
	Coil resistance (Ambient temperature 20°C)	Ω	BRN – WHT : 25.79 ORG – YEL : 5.792 WHT – VLT : 5.086 YEL – BLK : 6.746 VLT – ORG : 8.626 BLK – PNK : 6.361
	Safety device		
	Operating temperature	Open °C	130 ± 5
		Close °C	(115 ± 5)
	Run capacitor	VAC, μF	450 VAC, 6.0 μF
Electronic expansion valve			
	Coil		UKV-U031E
	Coil resistance (at 20°C)	Ω	ORG – GRY : 46 YEL – GRY : 46 RED – GRY : 46 BLK – GRY : 46
	Valve body		UKV-30D33
Heat exchanger			
	Coil		Aluminium plate fin / Copper tube
	Rows...fin pitch	mm	3...2.0
	Face area	m^2	0.308
Drain pump			PLD-12230STHU-1
	Rated	V, W	AC 230 V, 50 Hz, 12 W
	Height from unit bottom & capacity		500 mm, 400 cc/min

4

12. Low Silhouette Ducted Type (F1 Type)

Indoor unit (I)

MODEL No.			**S-140MF1E5**
Power source			220 - 230 - 240 V, single-phase, 50/60 Hz
Controller P.C.B. Ass'y			CR-UXRP71B-P (Microprocessor)
Fan (Number...diameter)		mm	Centrifugal (3...ø190)
Fan motor			
	Model...Nominal output	W	KFC4X-141D5P-S...160 W
	Power source		220 - 230 - 240 V / single-phase / 50 Hz
	No. of pole...r.p.m. (230V, High)	rpm	4P... 1,207
	Coil resistance (Ambient temperature 20°C)	Ω	BRN – WHT : 25.79 ORG – YEL : 5.792 WHT – VLT : 5.086 YEL – BLK : 6.746 VLT – ORG : 8.626 BLK – PNK : 6.361
	Safety device		
	Operating temperature	Open °C	130 ± 5
		Close °C	(115 ± 5)
	Run capacitor	VAC, μF	450 VAC, 8.0 μF
Electronic expansion valve			
	Coil		UKV-U031E
	Coil resistance (at 20°C)	Ω	ORG – GRY : 46 YEL – GRY : 46 RED – GRY : 46 BLK – GRY : 46
	Valve body		UKV-30D33
Heat exchanger			
	Coil		Aluminium plate fin / Copper tube
	Rows...fin pitch	mm	3...2.0
	Face area	m^2	0.308
Drain pump			PLD-12230STHU-1
	Rated	V, W	AC 230 V, 50 Hz, 12 W
	Height from unit bottom & capacity		500 mm, 400 cc/min

4

12. Low Silhouette Ducted Type (F1 Type)

Indoor unit (J)

MODEL No.			**S-160MF1E5**
Power source			220 - 230 - 240 V, single-phase, 50/60 Hz
Controller P.C.B. Ass'y			CR-UXRP71B-P (Microprocessor)
Fan (Number...diameter)		mm	Centrifugal (3...ø190)
Fan motor			
	Model...Nominal output	W	KFC4X-141D5P-S...160 W
	Power source		220 - 230 - 240 V / single-phase / 50 Hz
	No. of pole...r.p.m. (230V, High)	rpm	4P... 1,207
	Coil resistance (Ambient temperature 20°C)	Ω	BRN – WHT : 25.79 ORG – YEL : 5.792 WHT – VLT : 5.086 YEL – BLK : 6.746 VLT – ORG : 8.626 BLK – PNK : 6.361
	Safety device		
	Operating temperature	Open °C	130 ± 5
		Close °C	(115 ± 5)
	Run capacitor	VAC, μF	450 VAC, 8.0 μF
Electronic expansion valve			
	Coil		UKV-U031E
	Coil resistance (at 20°C)	Ω	ORG – GRY : 46 YEL – GRY : 46 RED – GRY : 46 BLK – GRY : 46
	Valve body		UKV-30D33
Heat exchanger			
	Coil		Aluminium plate fin / Copper tube
	Rows...fin pitch	mm	3...2.0
	Face area	m^2	0.308
Drain pump			PLD-12230STHU-1
	Rated	V, W	AC 230 V, 50 Hz, 12 W
	Height from unit bottom & capacity		500 mm, 400 cc/min

4

12. Low Silhouette Ducted Type (F1 Type)

12-3. Dimensional Data

Indoor unit: S-22MF1E5 / 28MF1E5 / 36MF1E5 / 45MF1E5 / 56MF1E5

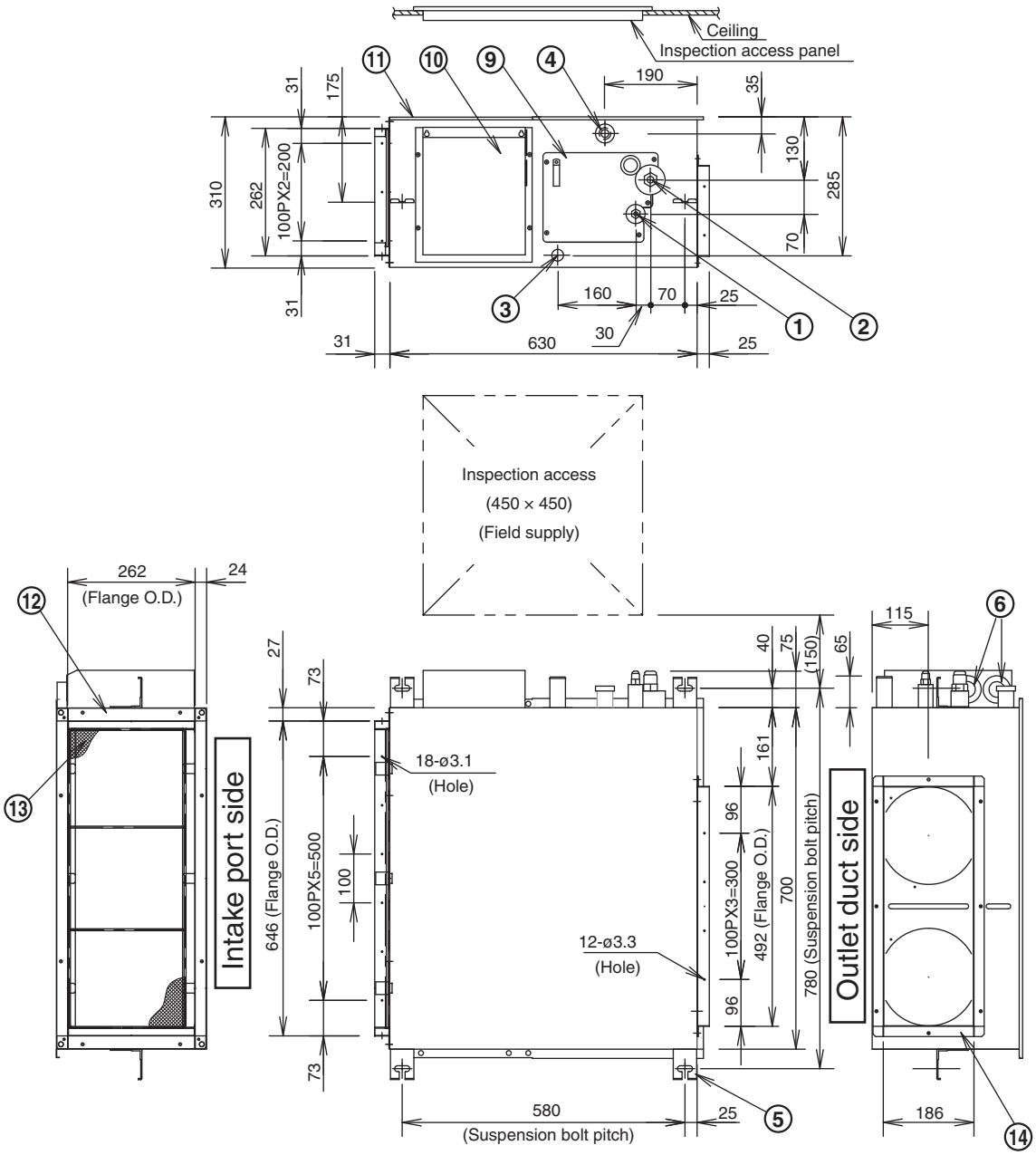

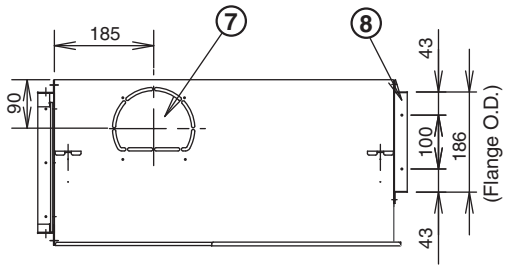

① Refrigerant tubing joint ø6.35 Flare (liquid tube)
② Refrigerant tubing joint ø12.7 Flare (gas tube)
③ Upper drain port VP25 (O.D. 32 mm) ℓ200 flexible hose supplied
④ Bottom drain port VP25 (O.D. 32 mm)
⑤ Suspension lug (4 - 12 × 37 mm)
⑥ Power supply outlet (2 - ø30 mm)
⑦ Fresh air intake port (ø150 mm)
⑧ Flange for flexible air outlet duct
⑨ Tube cover
⑩ Electrical component box
⑪ Wind pressure endurance
⑫ Flange for air intake duct
⑬ Filter (608 × 241) × 1
⑭ Flange for air outlet duct

unit: mm

12. Low Silhouette Ducted Type (F1 Type)

Indoor unit: S-73MF1E5 / 90MF1E5

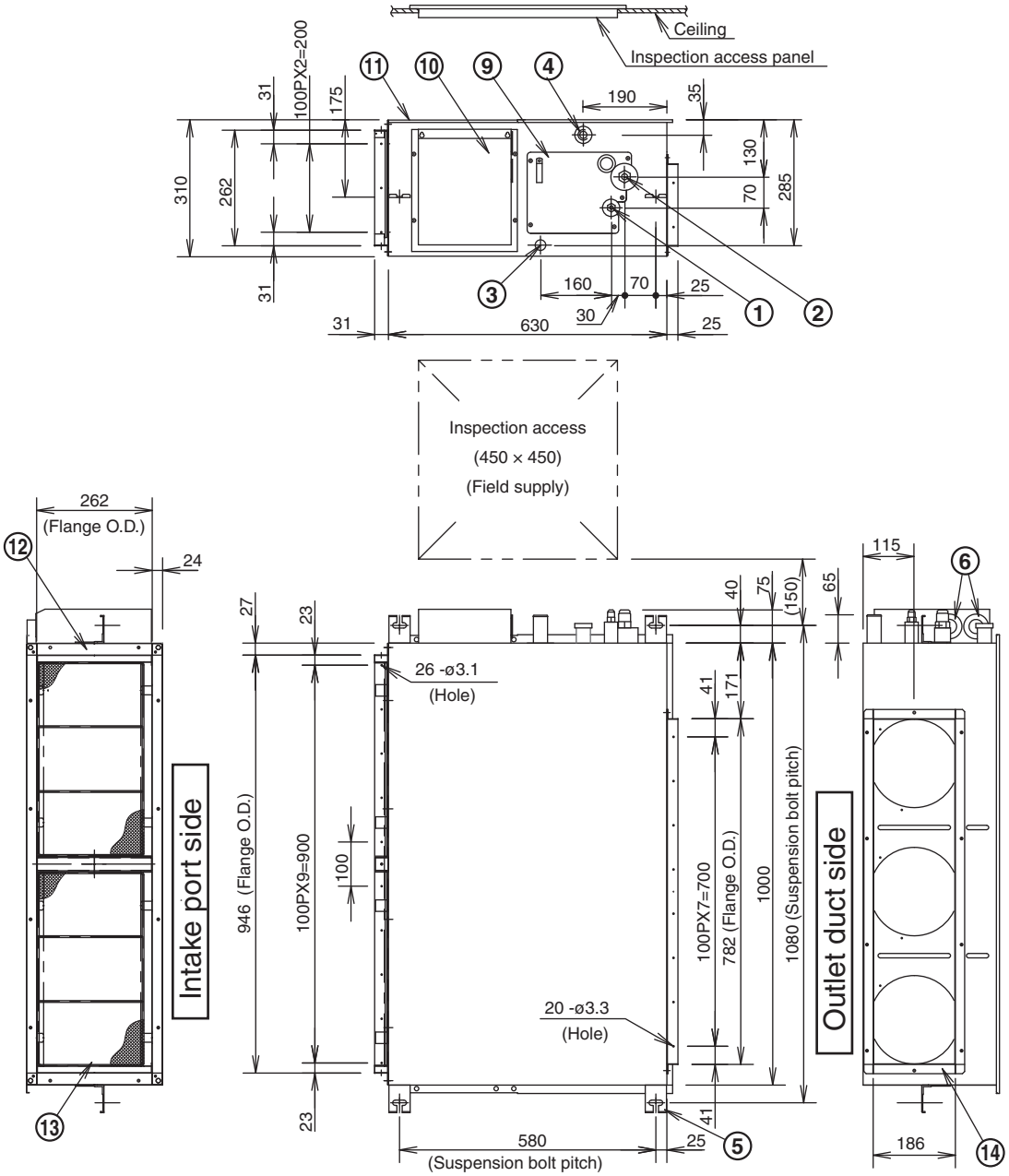

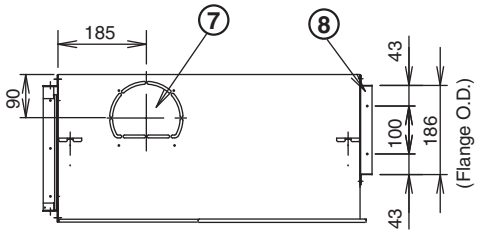

① Refrigerant tubing joint ø9.52 Flare (liquid tube)
② Refrigerant tubing joint ø15.88 Flare (gas tube)
③ Upper drain port VP25 (O.D. 32 mm) ℓ200 flexible hose supplied
④ Bottom drain port VP25 (O.D. 32 mm)
⑤ Suspension lug (4 - 12 × 37 mm)
⑥ Power supply outlet (2 - ø30 mm)
⑦ Fresh air intake port (ø150 mm)
⑧ Flange for flexible air outlet duct
⑨ Tube cover
⑩ Electrical component box
⑪ Wind pressure endurance
⑫ Flange for air intake duct
⑬ Filter (437 × 241) × 2
⑭ Flange for air outlet duct

unit: mm

12. Low Silhouette Ducted Type (F1 Type)

Indoor unit: S-106MF1E5 / 140MF1E5 / 160MF1E5

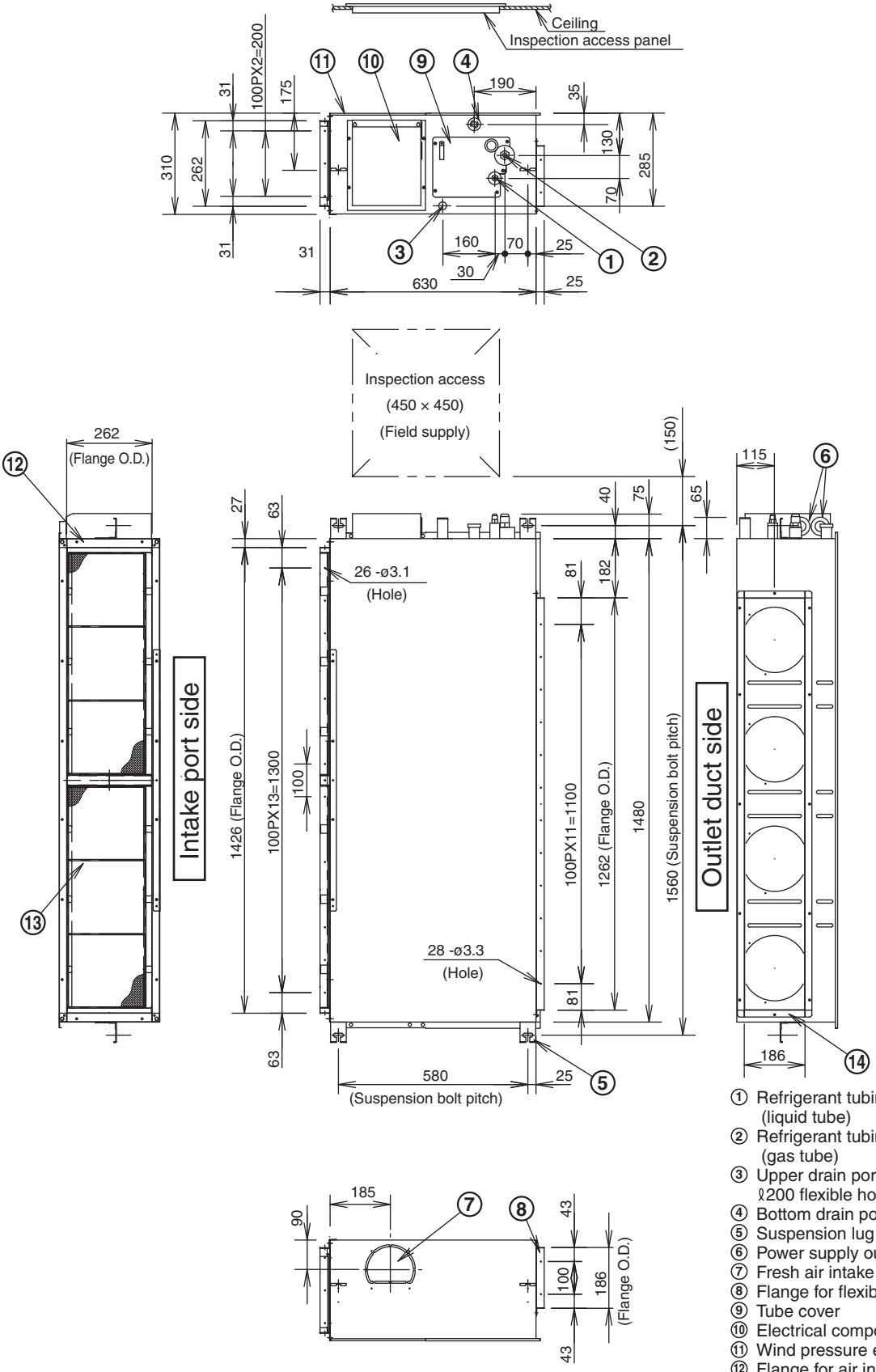

① Refrigerant tubing joint ø9.52 Flare (liquid tube)
② Refrigerant tubing joint ø15.88 Flare (gas tube)
③ Upper drain port VP25 (O.D. 32 mm) ℓ200 flexible hose supplied
④ Bottom drain port VP25 (O.D. 32 mm)
⑤ Suspension lug (4 - 12 × 37 mm)
⑥ Power supply outlet (2 - ø30 mm)
⑦ Fresh air intake port (ø150 mm)
⑧ Flange for flexible air outlet duct
⑨ Tube cover
⑩ Electrical component box
⑪ Wind pressure endurance
⑫ Flange for air intake duct
⑬ Filter (677 × 241) × 2
⑭ Flange for air outlet duct

unit: mm

12. Low Silhouette Ducted Type (F1 Type)

■ Flange for Air Intake Duct (Field supply) For Low Silhouette Ducted Type

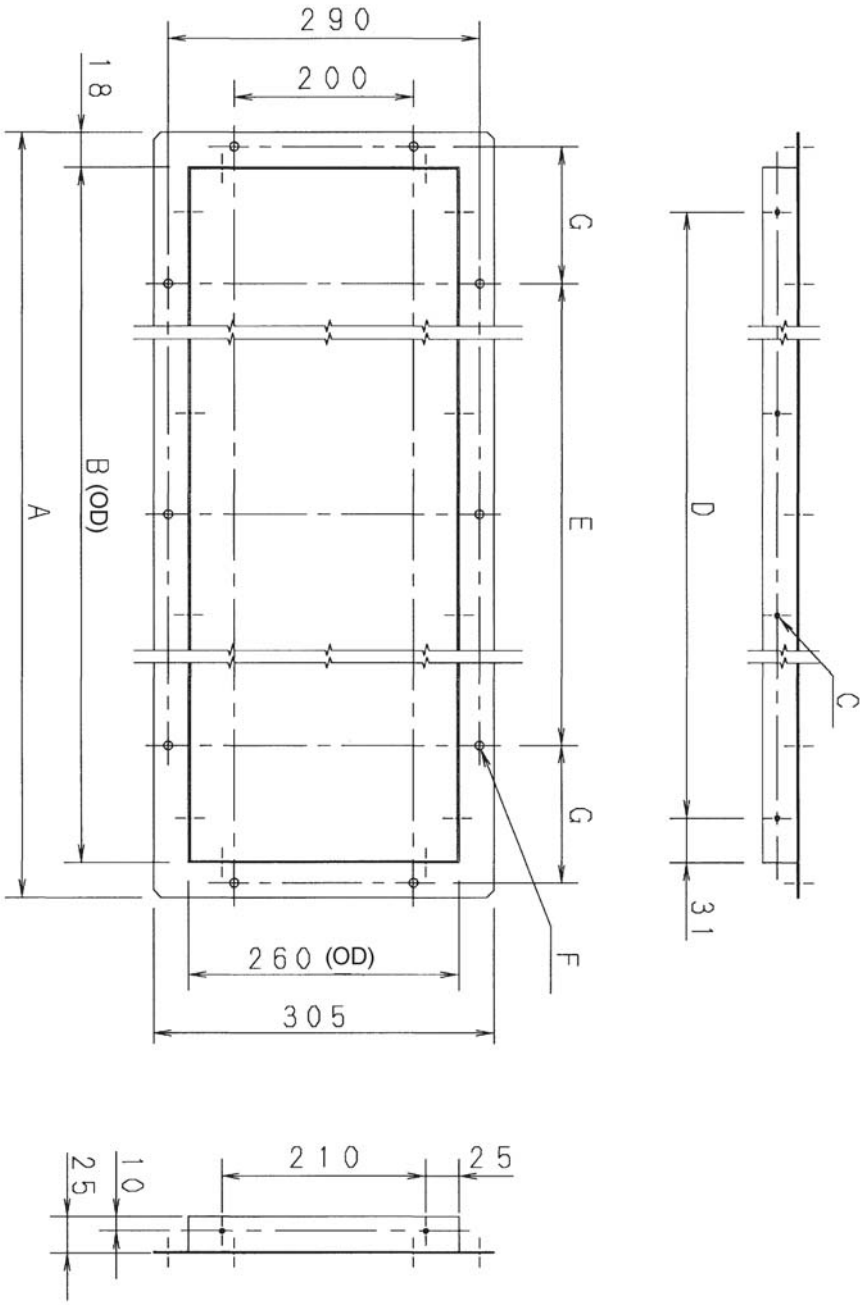

Thickness more than T1.2 mm (mm)

	A	B	C	D	E*	F	G
22, 28, 36, 45, 56 type	698	662	12–ø3.3	3 × 200P = 600	1×340P=340	8–ø6	170
73, 90 type	998	962	16–ø3.3	5 × 180P = 900	(245)+(250)+(245)=740	12–ø6	120
106, 140, 160 type	1,478	1,442	18–ø3.3	6 × 230P = 1,380	(245)+(245)+(240) +(245)+(245)=1,220	16–ø6	120

*Note : Each pitch (digit in the parenthesis) is displayed from the left.

12. Low Silhouette Ducted Type (F1 Type)

12-4. Noise Criterion Curves

MODEL	: S-22MF1E5 / 28MF1E5 / 36MF1E5
SOUND LEVEL	: HIGH 29 dB (A), NC 20 / LOW 22 dB(A), NC13
CONDITION	: Under the unit 1.5 m
SOURCE	: 220 - 230 - 240 V, Single-phase, 50 Hz

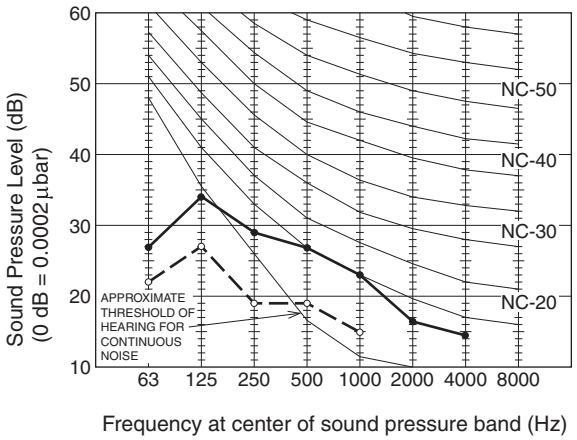

MODEL	: S-45MF1E5 / 56MF1E5
SOUND LEVEL	: HIGH 30 dB(A), NC 23 / LOW 25 dB(A), NC17
CONDITION	: Under the unit 1.5 m
SOURCE	: 220 - 230 - 240 V, Single-phase, 50 Hz

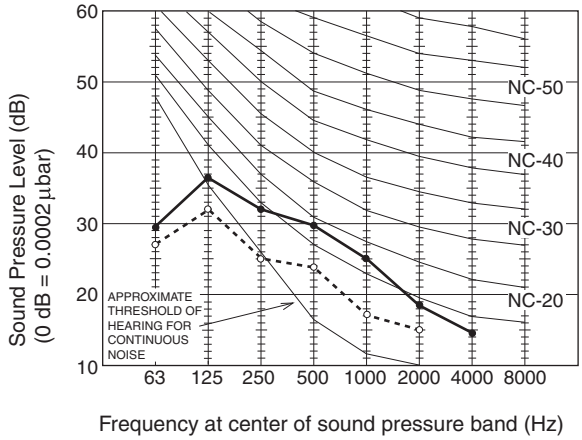

MODEL	: S-73MF1E5
SOUND LEVEL	: HIGH 34 dB(A), NC 22 / LOW 27 dB(A), NC18
CONDITION	: Under the unit 1.5 m
SOURCE	: 220 - 230 - 240 V, Single-phase, 50 Hz

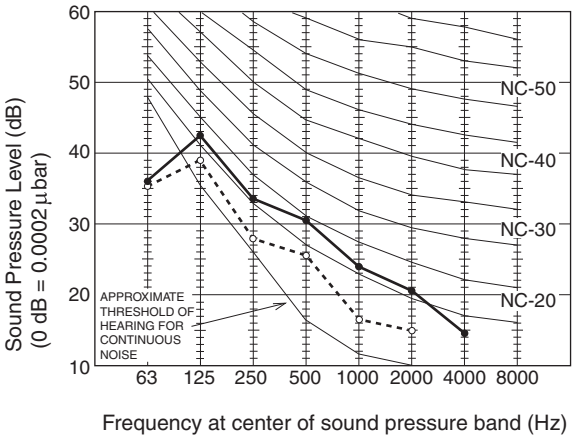

MODEL	: S-90MF1E5
SOUND LEVEL	: HIGH 34 dB(A), NC 22 / LOW 27 dB(A), NC18
CONDITION	: Under the unit 1.5 m
SOURCE	: 220 - 230 - 240 V, Single-phase, 50 Hz

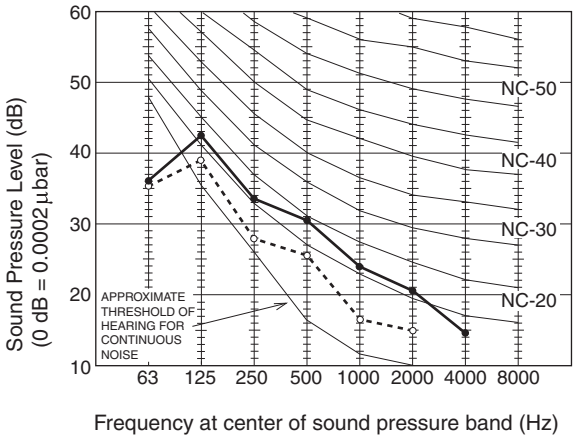

12. Low Silhouette Ducted Type (F1 Type)

MODEL	: S-106MF1E5
SOUND LEVEL	: HIGH 38 dB(A), NC 30 / LOW 31 dB(A), NC 21
CONDITION	: Under the unit 1.5 m
SOURCE	: 220 - 230 - 240 V, Single-phase, 50 Hz

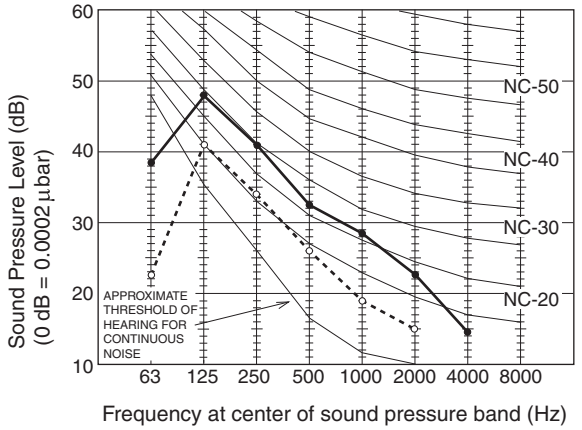

MODEL	: S-140MF1E5
SOUND LEVEL	: HIGH 40 dB(A), NC 33 / LOW 33 dB(A), NC 25
CONDITION	: Under the unit 1.5 m
SOURCE	: 220 - 230 - 240 V, Single-phase, 50 Hz

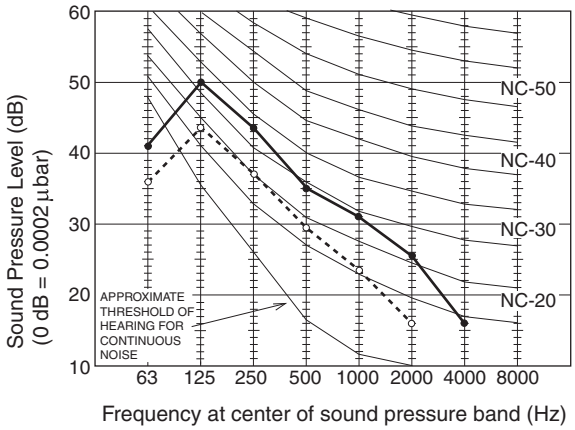

MODEL	: S-160MF1E5
SOUND LEVEL	: HIGH 40 dB(A), NC 33 / LOW 33 dB(A), NC 25
CONDITION	: Under the unit 1.5 m
SOURCE	: 220 - 230 - 240 V, Single-phase, 50 Hz

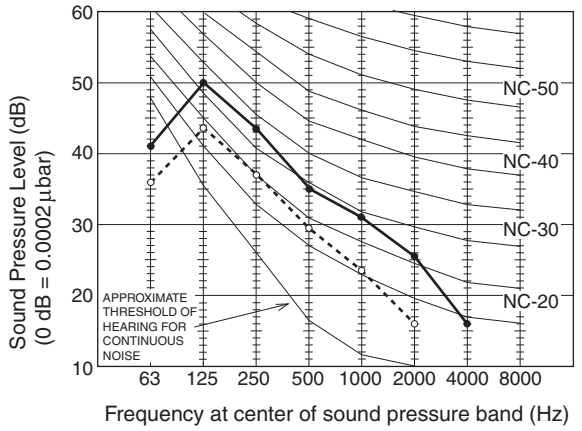

REMARKS:
1. Value obtained in the actual place where the unit is installed may be slightly higher than the values shown in this graph because of the conditions of operation, the structure of the building, the background noise and other factors.
2. The test results were obtained from an anechoic room.

NOTE

To evaluate the noise level, the maximum value of the measured sound pressure level is used. Read the value at each frequency level (on horizontal axis, center of the sound pressure band) from 63 Hz to 8000 Hz, and select the corresponding maximum value indicated on the vertical axis.

12. Low Silhouette Ducted Type (F1 Type)

12-5. Increasing the Fan Speed

■ Booster Cable for Low Silhouette Ducted Type

If external static pressure is too great (due to long extension of ducts, for example), the air flow volume may drop too low at each air outlet. This problem may be solved by increasing the fan speed using the following procedure:

(1) Remove 2 screws on the electrical component box and remove the cover plate.
(2) Disconnect the fan motor sockets in the box.
(3) Take out the booster cable (sockets at both ends) clamped in the box.
(4) Securely connect the booster cable sockets between the disconnected fan motor sockets in step 2 as shown in the Fig. 7-1.
(5) Place the cable neatly in the box and reinstall the cover plate.

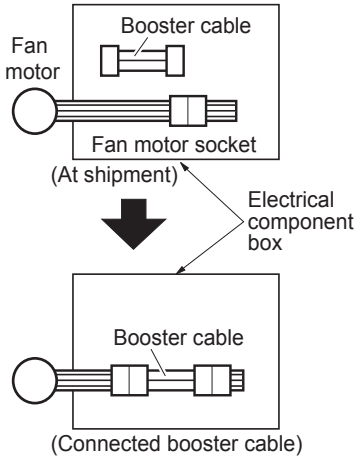

Fig. 7-1

Indoor Fan Performance

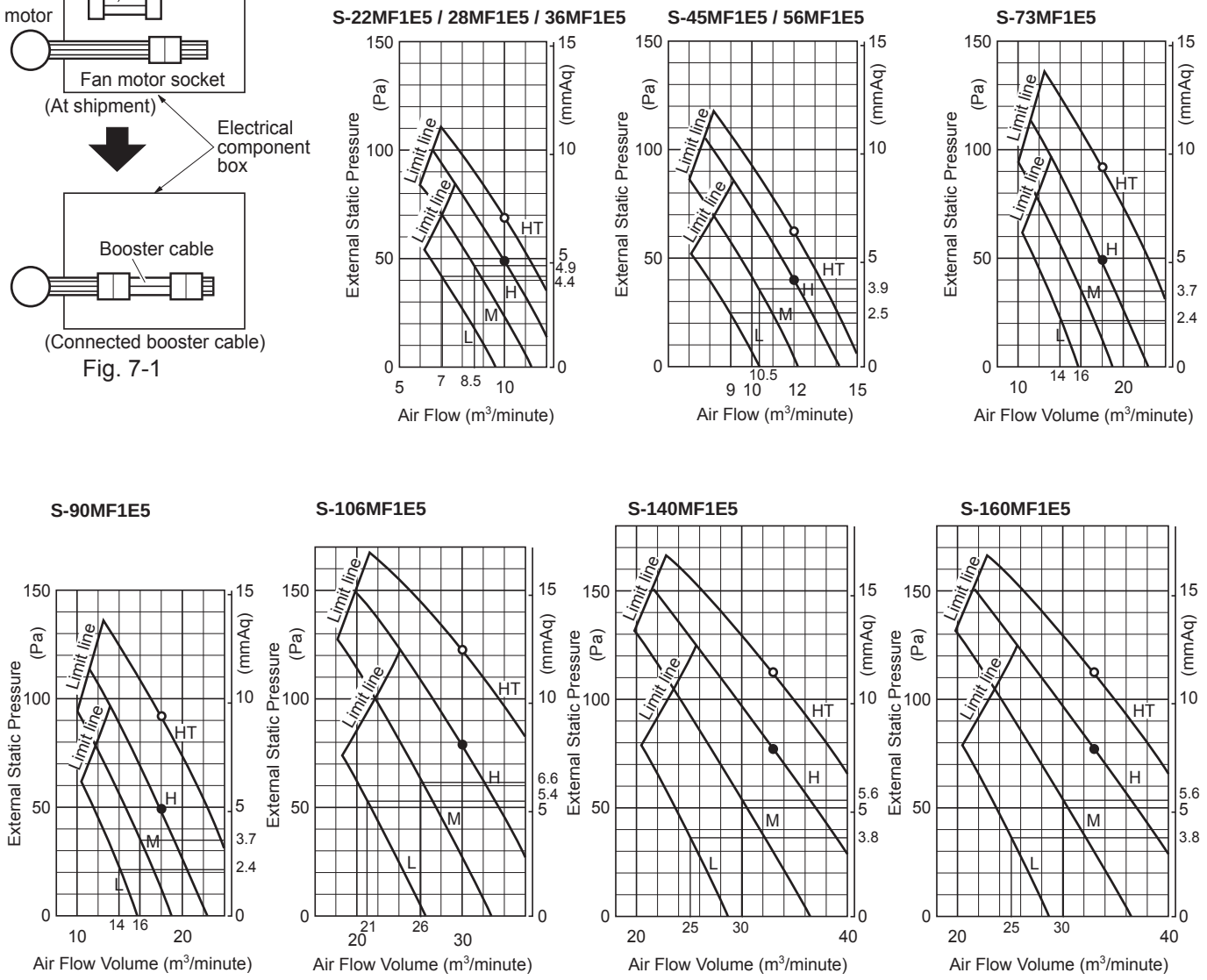

NOTE

HT : Using the booster cable

H : At shipment

Fig. 7-2

■ How to read the diagram

The vertical axis is the external static pressure (Pa) while the horizontal axis represents the AIR FLOW (m^3/minute).
The characteristic curves for “HT”, “H”, “M” and “L” fan speed control are shown.
The nameplate values are shown based on the “H” air flow. For the 73 type, the air flow is 18 m^3/minute, while the external static pressure is 49 Pa at “H” position. If external static pressure is too great (due to long extension of duct, for example), the air flow volume may drop too low at each air outlet.
This problem may be solved by increasing the fan speed as explained above.

13. High Static Pressure Ducted Type (E1 Type)

13-1. Specifications

Unit specifications (A)

MODEL No.	Indoor Unit		S-73ME1E5					
POWER SOURCE			220 - 230 - 240 V, single-phase, 50/60 Hz					
PERFORMANCE			Cooling			Heating		
Capacity		kW	7.3			8.0		
		BTU / h	25,000			27,000		
Air circulation (Hi / Me / Lo)		m^3 / h	1,380 / 1,320 / 1,260					
Moisture removal (High)		Liters / h	3.1			–		
External static pressure (High)		Pa {mmAq}	186 {19}					
ELECTRICAL RATINGS								
Voltage rating		V	220	230	240	220	230	240
Available voltage range		V	198 - 264			198 - 264		
Running amperes		A	2.29	2.30	2.31	2.29	2.30	2.31
Power input		W	480	505	530	480	505	530
Power factor		%	95	95	96	95	95	96
Max. starting amperes		A	3	3	3	3	3	3
FEATURES								
Controls			Microprocessor					
Timer			ON / OFF Timer (Max. 72 h)					
Fan speeds			3 and Automatic control					
Air filter			Field supply					
Refrigerant control			Electronic expansion valve					
Operation sound (Hi / Me / Lo)		dB-A	44 / 43 / 42					
Refrigerant tubing connections			Flare type					
Refrigerant tube diameter	Liquid tube	mm (in.)	9.52 (3 / 8)					
	Gas tube	mm (in.)	15.88 (5 / 8)					
Drain connection			25 A, Male screw					
Remote controller			Optional (Wired / Wireless)					
Refrigerant tubing kit / Accessories			Optional / –					
Color (Approximate value)			–					
DIMENSIONS & WEIGHT			Unit dimensions			Package dimensions		
Unit dimensions	Height	mm (in.)	420 (16-17 / 32)			513 (20-3 / 16)		
	Width	mm (in.)	1065 (41-15 / 16)			1148 (45-3 / 16)		
	Depth	mm (in.)	620 (24-13 / 32)			713 (28-1 / 16)		
Net weight		kg (lbs.)	47 (104)					
Shipping weight		kg (lbs.)	61 (134)					
Shipping volume		m^3 (cu.ft)	0.420 (14.8)					

DATA SUBJECT TO CHANGE WITHOUT NOTICE.

Rated conditions
Cooling: Indoor air temperature 27°C DB / 19°C WB; Outdoor air temperature 35°C DB
Heating: Indoor air temperature 20°C DB; Outdoor air temperature 7°C DB / 6°C WB

13. High Static Pressure Ducted Type (E1 Type)

Unit specifications (B)

MODEL No.	Indoor Unit		S-106ME1E5					
POWER SOURCE			220 - 230 - 240 V, single-phase, 50/60 Hz					
PERFORMANCE			Cooling			Heating		
Capacity		kW	10.6			11.4		
		BTU / h	36,000			39,000		
Air circulation (Hi / Me / Lo)		m^3 / h	1,800 / 1,680 / 1,500					
Moisture removal (High)		Liters / h	4.4			–		
External static pressure (High)		Pa {mmAq}	176 {18}					
ELECTRICAL RATINGS								
Voltage rating		V	220	230	240	220	230	240
Available voltage range		V	198 - 264			198 - 264		
Running amperes		A	2.46	2.46	2.47	2.46	2.46	2.47
Power input		W	520	545	570	520	545	570
Power factor		%	96	96	96	96	96	96
Max. starting amperes		A	4	4	4	4	4	4
FEATURES								
Controls			Microprocessor					
Timer			ON / OFF Timer (Max. 72 h)					
Fan speeds			3 and Automatic control					
Air filter			Field supply					
Refrigerant control			Electronic expansion valve					
Operation sound (Hi / Me / Lo)		dB-A	45 / 44 / 42					
Refrigerant tubing connections			Flare type					
Refrigerant tube diameter	Liquid tube	mm (in.)	9.52 (3 / 8)					
	Gas tube	mm (in.)	15.88 (5 / 8)					
Drain connection			25 A, Male screw					
Remote controller			Optional (Wired / Wireless)					
Refrigerant tubing kit / Accessories			Optional / –					
Color (Approximate value)			–					
DIMENSIONS & WEIGHT			Unit dimensions			Package dimensions		
Unit dimensions	Height	mm (in.)	420 (16-17 / 32)			513 (20-3 / 16)		
	Width	mm (in.)	1065 (41-15 / 16)			1148 (45-3 / 16)		
	Depth	mm (in.)	620 (24-13 / 32)			713 (28-1 / 16)		
Net weight		kg (lbs.)	50 (110)					
Shipping weight		kg (lbs.)	64 (141)					
Shipping volume		m^3 (cu.ft)	0.420 (14.8)					

DATA SUBJECT TO CHANGE WITHOUT NOTICE.

Rated conditions
Cooling: Indoor air temperature 27°C DB / 19°C WB; Outdoor air temperature 35°C DB
Heating: Indoor air temperature 20°C DB; Outdoor air temperature 7°C DB / 6°C WB

13. High Static Pressure Ducted Type (E1 Type)

Unit specifications (C)

MODEL No.	Indoor Unit		S-140ME1E5					
POWER SOURCE			220 - 230 - 240 V, single-phase, 50/60 Hz					
PERFORMANCE			Cooling			Heating		
Capacity		kW	14.0			16.0		
		BTU / h	47,800			54,600		
Air circulation (Hi / Me / Lo)		m^3 / h	2,160 / 2,100 / 1,980					
Moisture removal (High)		Liters / h	6.6			–		
External static pressure (High)		Pa {mmAq}	167 {17}					
ELECTRICAL RATINGS								
Voltage rating		V	220	230	240	220	230	240
Available voltage range		V	198 - 264			198 - 264		
Running amperes		A	2.80	2.90	3.00	2.80	2.90	3.00
Power input		W	600	660	710	600	660	710
Power factor		%	97	99	99	97	99	99
Max. starting amperes		A	4	4	4	4	4	4
FEATURES								
Controls			Microprocessor					
Timer			ON / OFF Timer (Max. 72 h)					
Fan speeds			3 and Automatic control					
Air filter			Field supply					
Refrigerant control			Electronic expansion valve					
Operation sound (Hi / Me / Lo)		dB-A	47 / 46 / 44					
Refrigerant tubing connections			Flare type					
Refrigerant tube diameter	Liquid tube	mm (in.)	9.52 (3 / 8)					
	Gas tube	mm (in.)	15.88 (5 / 8)					
Drain connection			25 A, Male screw					
Remote controller			Optional (Wired / Wireless)					
Refrigerant tubing kit / Accessories			Optional / –					
Color (Approximate value)			–					
DIMENSIONS & WEIGHT			Unit dimensions			Package dimensions		
Unit dimensions	Height	mm (in.)	450 (17-23 / 32)			513 (20-3 / 16)		
	Width	mm (in.)	1065 (41-15 / 16)			1148 (45-3 / 16)		
	Depth	mm (in.)	620 (24-13 / 32)			713 (28-1 / 16)		
Net weight		kg (lbs.)	54 (119)					
Shipping weight		kg (lbs.)	69 (152)					
Shipping volume		m^3 (cu.ft)	0.420 (14.8)					

DATA SUBJECT TO CHANGE WITHOUT NOTICE.

Rated conditions
Cooling: Indoor air temperature 27°C DB / 19°C WB; Outdoor air temperature 35°C DB
Heating: Indoor air temperature 20°C DB; Outdoor air temperature 7°C DB / 6°C WB

13. High Static Pressure Ducted Type (E1 Type)

Unit specifications (D)

MODEL No.	Indoor Unit		S-224ME1E5					
POWER SOURCE			220 - 230 - 240 V, single-phase, 50/60 Hz					
PERFORMANCE			Cooling			Heating		
Capacity		kW	22.4			25.0		
		BTU / h	76,400			85,300		
Air circulation (Hi / Me / Lo)		m^3 / h	3,360 / 3,190 / 2,980					
Moisture removal (High)		Liters / h	11.1			–		
External static pressure (High)		Pa {mmAq}	176 {18}					
ELECTRICAL RATINGS								
Voltage rating		V	220	230	240	220	230	240
Available voltage range		V	198 - 264			198 - 264		
Running amperes		A	4.05	4.06	4.07	4.05	4.06	4.07
Power input		W	870	900	930	870	900	930
Power factor		%	98	96	95	98	96	95
Max. starting amperes		A	7	7	7	7	7	7
FEATURES								
Controls			Microprocessor					
Timer			ON / OFF Timer (Max. 72 h)					
Fan speeds			3 and Automatic control					
Air filter			Field supply					
Refrigerant control			Electronic expansion valve					
Operation sound (Hi / Me / Lo)		dB-A	48 / 47 / 46					
Refrigerant tubing connections			3 / 8" : Flare type 3 / 4" : Brazing connection					
Refrigerant tube diameter	Liquid tube	mm (in.)	9.52 (3 / 8)					
	Gas tube	mm (in.)	19.05 (3 / 4)					
Drain connection			25 A, Male screw					
Remote controller			Optional (Wired / Wireless)					
Refrigerant tubing kit / Accessories			Optional / –					
Color (Approximate value)			–					
DIMENSIONS & WEIGHT			Unit dimensions			Package dimensions		
Unit dimensions	Height	mm (in.)	479 (18-27 / 32)			615 (24-7 / 32)		
	Width	mm (in.)	1428 (56-7 / 32)			1536 (60-15 / 32)		
	Depth	mm (in.)	1230 (48-7 / 16)			1342 (52-27 / 32)		
Net weight		kg (lbs.)	110 (243)					
Shipping weight		kg (lbs.)	134 (295)					
Shipping volume		m^3 (cu.ft)	1.268 (44.8)					

DATA SUBJECT TO CHANGE WITHOUT NOTICE.

Rated conditions
Cooling: Indoor air temperature 27°C DB / 19°C WB; Outdoor air temperature 35°C DB
Heating: Indoor air temperature 20°C DB; Outdoor air temperature 7°C DB / 6°C WB

13. High Static Pressure Ducted Type (E1 Type)

Unit specifications (E)

MODEL No.	Indoor Unit		S-280ME1E5					
POWER SOURCE			220 - 230 - 240 V, single-phase, 50 Hz					
PERFORMANCE			Cooling			Heating		
Capacity		kW	28.0			31.5		
		BTU / h	95,500			107,500		
Air circulation (Hi / Me / Lo)		m^3 / h	4,320 / 4,200 / 3,960					
Moisture removal (High)		Liters / h	13.9			–		
External static pressure (High)		Pa {mmAq}	216 {22} at shipment 235 {24} using the booster cable					
ELECTRICAL RATINGS								
Voltage rating		V	220	230	240	220	230	240
Available voltage range		V	198 - 264			198 - 264		
Running amperes		A	6.04	6.06	6.07	6.04	6.06	6.07
Power input		W	1270	1330	1390	1270	1330	1390
Power factor		%	96	95	95	96	95	95
Max. starting amperes		A	7	7	7	7	7	7
FEATURES								
Controls			Microprocessor					
Timer			ON / OFF Timer (Max. 72 h)					
Fan speeds			3 and Automatic control					
Air filter			Field supply					
Refrigerant control			Electronic expansion valve					
Operation sound (Hi / Me / Lo)		dB-A	51 / 50 / 49					
Using the booster cable (Mi / Me / Lo)		dB-A	52 / 51 / 50					
Refrigerant tubing connections			3 / 8" : Flare type 7 / 8" : Brazing connection					
Refrigerant tube diameter	Liquid tube	mm (in.)	9.52 (3 / 8)					
	Gas tube	mm (in.)	22.22 (7 / 8)					
Drain connection			25 A, Male screw					
Remote controller			Optional (Wired / Wireless)					
Refrigerant tubing kit / Accessories			Optional / –					
Color (Approximate value)			–					
DIMENSIONS & WEIGHT			Unit dimensions			Package dimensions		
Unit dimensions	Height	mm (in.)	479 (18-27 / 32)			615 (24-7 / 32)		
	Width	mm (in.)	1428 (56-7 / 32)			1536 (60-15 / 32)		
	Depth	mm (in.)	1230 (48-7 / 16)			1342 (52-27 / 32)		
Net weight		kg (lbs.)	120 (265)					
Shipping weight		kg (lbs.)	144 (317)					
Shipping volume		m^3 (cu.ft)	1.268 (44.8)					

DATA SUBJECT TO CHANGE WITHOUT NOTICE.

Rated conditions
Cooling: Indoor air temperature 27°C DB / 19°C WB; Outdoor air temperature 35°C DB
Heating: Indoor air temperature 20°C DB; Outdoor air temperature 7°C DB / 6°C WB

13. High Static Pressure Ducted Type (E1 Type)

13-2. Major Component Specifications

Indoor unit (A)

MODEL No.			S-73ME1E5
Power source			220 - 230 - 240 V, single-phase, 50/60 Hz
Controller P.C.B. Ass'y			CR-UXRP71B-P (Microprocessor)
Fan (Number...diameter)		mm	Centrifugal (1...ø220)
Fan motor			
	Model...Nominal output	W	KFC4X-201B5P...200 W
	Power source		220 - 230 - 240 V / single-phase / 50 Hz
	No. of pole...r.p.m. (230V, High)	rpm	4P... 1,004
	Coil resistance (Ambient temperature 20°C)	Ω	BRN – WHT : 13.75 WHT – VLT : 4.47 VLT – ORG : 1.20 ORG – YEL : 2.21 YEL – BLK : 10.33 BLK – PNK : 12.90
	Safety device		
	Operating temperature	Open °C	130 ± 5
		Close °C	(115 ± 5)
	Run capacitor	VAC, μF	440 VAC, 5.0 μF
Electronic expansion valve			
	Coil		UKV-U030E
	Coil resistance (at 20°C)	Ω	ORG – GRY : 46 RED – GRY : 46 YEL – GRY : 46 BLK – GRY : 46
	Valve body		UKV-25D32
Heat exchanger			
	Coil		Aluminium plate fin / Copper tube
	Rows...fin pitch	mm	3...2.0
	Face area	m^2	0.233

4

13. High Static Pressure Ducted Type (E1 Type)

Indoor unit (B)

MODEL No.			**S-106ME1E5**
Power source			220 - 230 - 240 V, single-phase, 50/60 Hz
Controller P.C.B. Ass'y			CR-UXRP71B-P (Microprocessor)
Fan (Number...diameter)		mm	Centrifugal (1...ø220)
Fan motor			
	Model...Nominal output	W	KFC4X-201B5P...200 W
	Power source		220 - 230 - 240 V / single-phase / 50 Hz
	No. of pole...r.p.m. (230V, High)	rpm	4P... 1,134
	Coil resistance (Ambient temperature 20°C)	Ω	BRN – WHT : 13.75 ORG – YEL : 2.21 WHT – VLT : 4.47 YEL – BLK : 10.33 VLT – ORG : 1.20 BLK – PNK : 12.90
	Safety device		
	Operating temperature	Open °C	130 ± 5
		Close °C	(115 ± 5)
	Run capacitor	VAC, μF	440 VAC, 5.0 μF
Electronic expansion valve			
	Coil		UKV-U030E
	Coil resistance (at 20°C)	Ω	ORG – GRY : 46 YEL – GRY : 46 RED – GRY : 46 BLK – GRY : 46
	Valve body		UKV-30D33
Heat exchanger			
	Coil		Aluminium plate fin / Copper tube
	Rows...fin pitch	mm	4...2.0
	Face area	m^2	0.273

4

13. High Static Pressure Ducted Type (E1 Type)

Indoor unit (C)

MODEL No.			S-140ME1E5
Power source			220 - 230 - 240 V, single-phase, 50/60 Hz
Controller P.C.B. Ass'y			CR-UXRP71B-P (Microprocessor)
Fan (Number...diameter)		mm	Centrifugal (1...ø250)
Fan motor			
	Model...Nominal output	W	KFC4Q-401A5P...350 W
	Power source		220 - 230 - 240 V / single-phase / 50 Hz
	No. of pole...r.p.m. (230V, High)	rpm	4P... 1,077
	Coil resistance (Ambient temperature 20°C)	Ω	BRN – WHT : 11.05 WHT – VLT : 1.80 VLT – ORG : 1.00 ORG – YEL : 4.57 YEL – PNK : 7.70
	Safety device		
	Operating temperature	Open °C	130 ± 5
		Close °C	(115 ± 5)
	Run capacitor	VAC, μF	440 VAC, 7.0 μF
Electronic expansion valve			
	Coil		UKV-U030E
	Coil resistance (at 20°C)	Ω	ORG – GRY : 46 RED – GRY : 46 YEL – GRY : 46 BLK – GRY : 46
	Valve body		UKV-30D33
Heat exchanger			
	Coil		Aluminium plate fin / Copper tube
	Rows...fin pitch	mm	4...2.0
	Face area	m^2	0.273

4

13. High Static Pressure Ducted Type (E1 Type)

Indoor unit (D)

MODEL No.			**S-224ME1E5**
Power source			220 - 230 - 240 V, single-phase, 50/60 Hz
Controller P.C.B. Ass'y			CR-UXRP71B-P (Microprocessor)
Fan (Number...diameter)		mm	Centrifugal (1...ø220)
Fan motor			
	Model...Nominal output	W	KFC4X-201B5P...200 W
	Power source		220 - 230 - 240 V / single-phase / 50 Hz
	No. of pole...r.p.m. (230V, High)	rpm	4P... 1,012
	Coil resistance (Ambient temperature 20°C)	Ω	BRN – WHT : 13.75 ORG – YEL : 2.21 WHT – VLT : 4.47 YEL – BLK : 10.33 VLT – ORG : 1.20 BLK – PNK : 12.90
	Safety device		
	Operating temperature	Open °C	130 ± 5
		Close °C	(115 ± 5)
	Run capacitor	VAC, μF	450 VAC, 7.0 μF
Electronic expansion valve			
	Coil		UKV-U023E
	Coil resistance (at 20°C)	Ω	ORG – GRY : 46 YEL – GRY : 46 RED – GRY : 46 BLK – GRY : 46
	Valve body		UKV-30D33
Heat exchanger			
	Coil		Aluminium plate fin / Copper tube
	Rows...fin pitch	mm	3...2.0
	Face area	m^2	0.540

4

13. High Static Pressure Ducted Type (E1 Type)

Indoor unit (E)

MODEL No.			S-280ME1E5
Power source			220 - 230 - 240 V, single-phase, 50 Hz
Controller P.C.B. Ass'y			CR-UXRP71B-P (Microprocessor)
Fan (Number...diameter)		mm	Centrifugal (2...ø250)
Fan motor			
	Model...Nominal output	W	KFC4X-401B3P...400 W
	Power source		220 - 230 - 240 V / single-phase / 50 Hz
	No. of pole...r.p.m. (230V, High)	rpm	4P... 1,211
	Coil resistance (Ambient temperature 20°C)	Ω	BRN – WHT : 6.159 ORG – YEL : 0.87 WHT – VLT : 1.08 YEL – BLK : 2.87 VLT – ORG : 0.77 BLK – PNK : 5.98
	Safety device		
	Operating temperature	Open °C	130 ± 5
		Close °C	(115 ± 5)
	Run capacitor	VAC, μF	450 VAC, 5.0 μF
Electronic expansion valve			
	Coil		UKV-U023E
	Coil resistance (at 20°C)	Ω	ORG – GRY : 46 YEL – GRY : 46 RED – GRY : 46 BLK – GRY : 46
	Valve body		UKV-30D33
Heat exchanger			
	Coil		Aluminium plate fin / Copper tube
	Rows...fin pitch	mm	3...2.0
	Face area	m^2	0.655

4

13. High Static Pressure Ducted Type (E1 Type)

13-3. Dimensional Data

Indoor unit: S-73ME1E5 / 106ME1E5 / 140ME1E5

unit: mm

	A	B	C
S-73ME1E5 / 106ME1E5	420	395	68
S-140ME1E5	450	425	98

① Refrigerant liquid line (ø9.52)
② Refrigerant gas line (ø15.88)
③ Power supply entry
④ Drain connection (20A / VP20)
⑤ Duct connection for suction
⑥ Duct connection for discharge

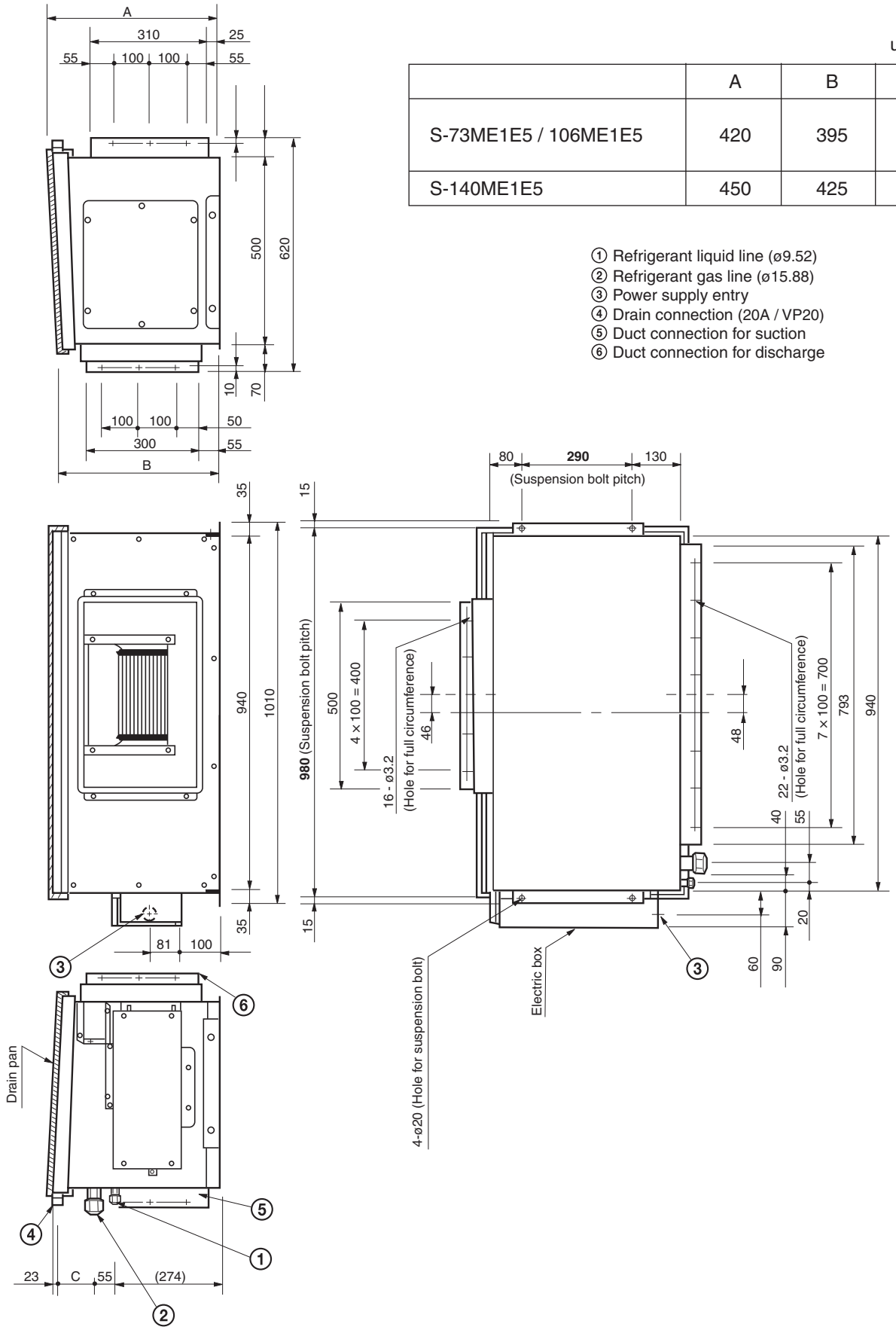

13. High Static Pressure Ducted Type (E1 Type)

Indoor unit: S-224ME1E5 / 280ME1E5

unit: mm

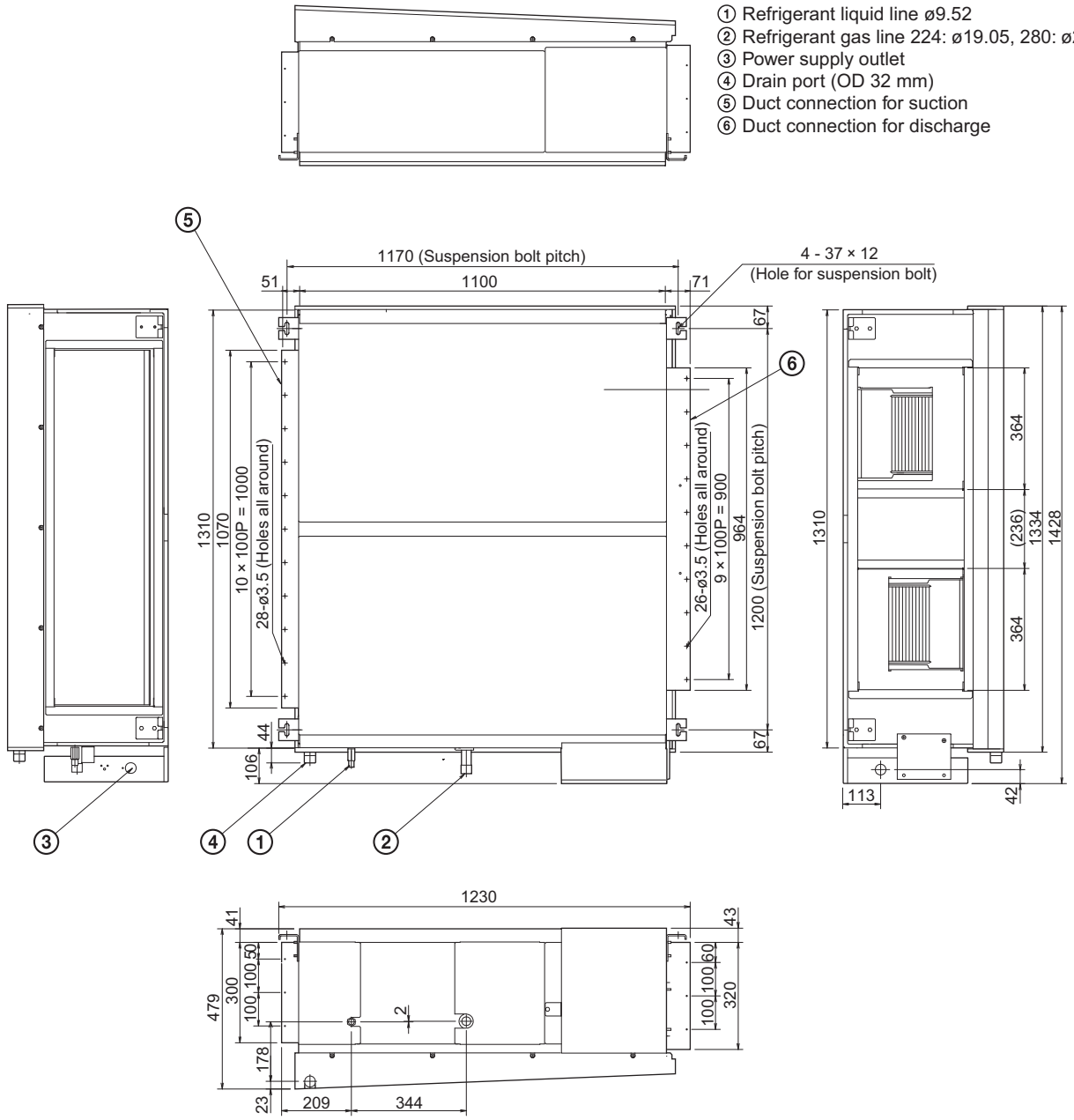

13. High Static Pressure Ducted Type (E1 Type)

13-4. Noise Criterion Curves

MODEL	: S-73ME1E5
SOUND LEVEL	: HIGH 44 dB(A), NC 38
CONDITION	: Under the unit 1.5 m
SOURCE	: 220 - 230 - 240 V, Single-phase, 50 Hz

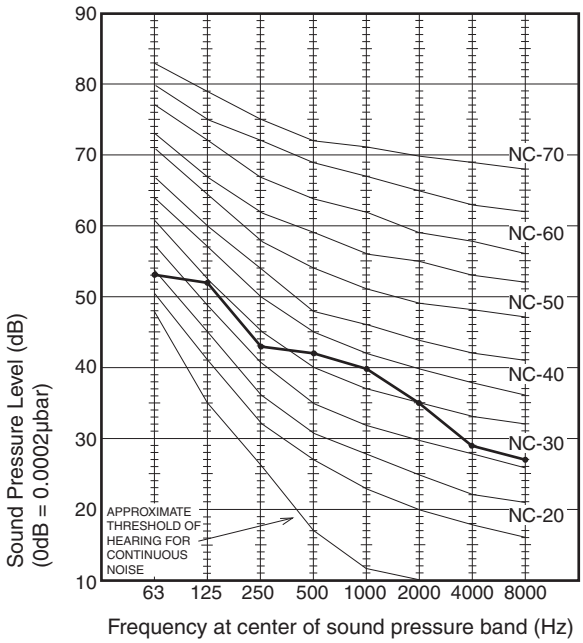

MODEL	: S-106ME1E5
SOUND LEVEL	: HIGH 45 dB(A), NC 39
CONDITION	: Under the unit 1.5 m
SOURCE	: 220 - 230 - 240 V, Single-phase, 50 Hz

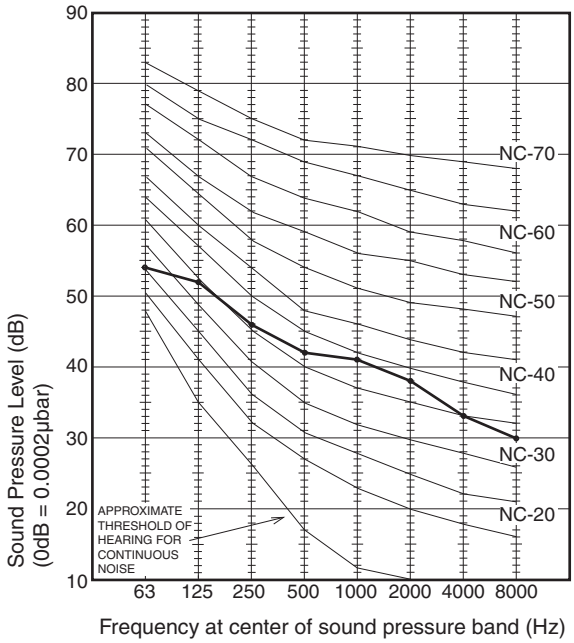

4

MODEL	: S-140ME1E5
SOUND LEVEL	: HIGH 47 dB(A), NC 42
CONDITION	: Under the unit 1.5 m
SOURCE	: 220 - 230 - 240 V, Single-phase, 50 Hz

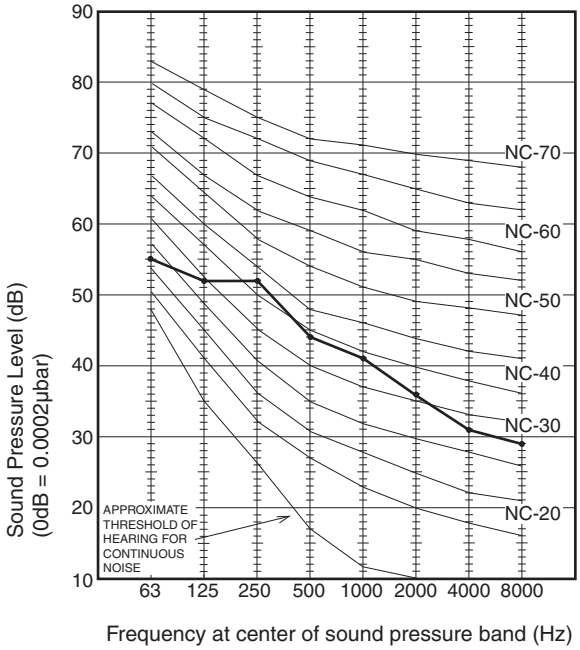

REMARKS:
1. Value obtained in the actual place where the unit is installed may be slightly higher than the values shown in this graph because of the conditions of operation, the structure of the building, the background noise and other factors.
2. The test results were obtained from an anechoic room.

NOTE

To evaluate the noise level, the maximum value of the measured sound pressure level is used. Read the value at each frequency level (on horizontal axis, center of the sound pressure band) from 63 Hz to 8000 Hz, and select the corresponding maximum value indicated on the vertical axis.

13. High Static Pressure Ducted Type (E1 Type)

MODEL	: S-224ME1E5
SOUND LEVEL	: HIGH 48 dB(A), NC 42
CONDITION	: Under the unit 1.5 m
SOURCE	: 220 - 230 - 240 V, 1 Phase, 50 Hz

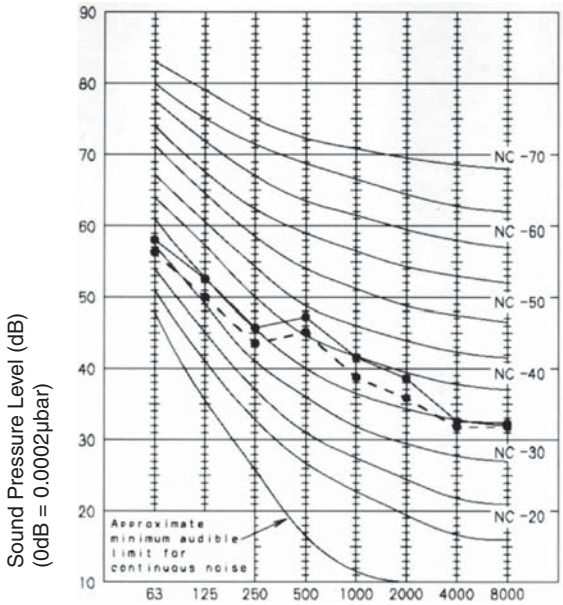

MODEL	: S-280ME1E5
SOUND LEVEL	: HIGH 51 dB(A), NC 43
CONDITION	: Under the unit 1.5 m
SOURCE	: 220 - 230 - 240 V, 1 Phase, 50 Hz

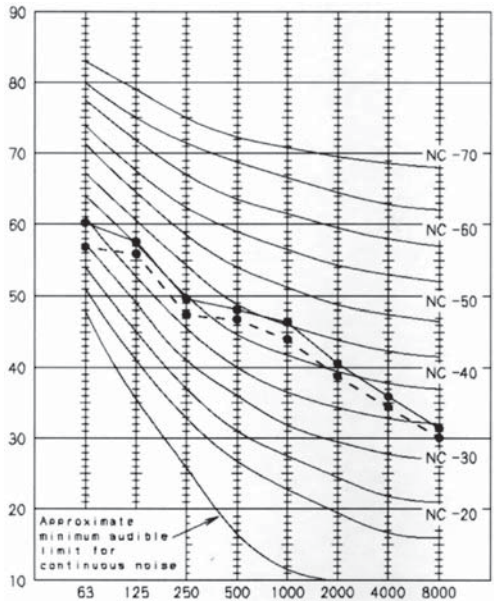

4

REMARKS:
1. Value obtained in the actual place where the unit is installed may be slightly higher than the values shown in this graph because of the conditions of operation, the structure of the building, the background noise and other factors.
2. The test results were obtained from an anechoic room.

NOTE

To evaluate the noise level, the maximum value of the measured sound pressure level is used. Read the value at each frequency level (on horizontal axis, center of the sound pressure band) from 63 Hz to 8000 Hz, and select the corresponding maximum value indicated on the vertical axis.

13. High Static Pressure Ducted Type (E1 Type)

13-5. R.A.P. (Refrigerant Accumulation Protector) Valve Kit

■ **Model: CZ-P160RVK2 (Optional)**

- **Connect 2 units in parallel for each indoor unit.**
- **Attach the R.A.P. valve kit within 30 meters from the indoor unit.**
- **Secure the R.A.P. valve kit using hanging bolts, etc.**
- **Be absolutely sure to install the R.A.P. valve kit top side up.**
- **Do not place the R.A.P. valve kit directly on the ceiling.**
- **The R.A.P. valve kit is required when a multiple number of type 224 or 280 units are to be connected to the same system.**
- **The R.A.P. valve kit is required when a type 224 or 280 indoor unit is to be connected among other indoor units.**

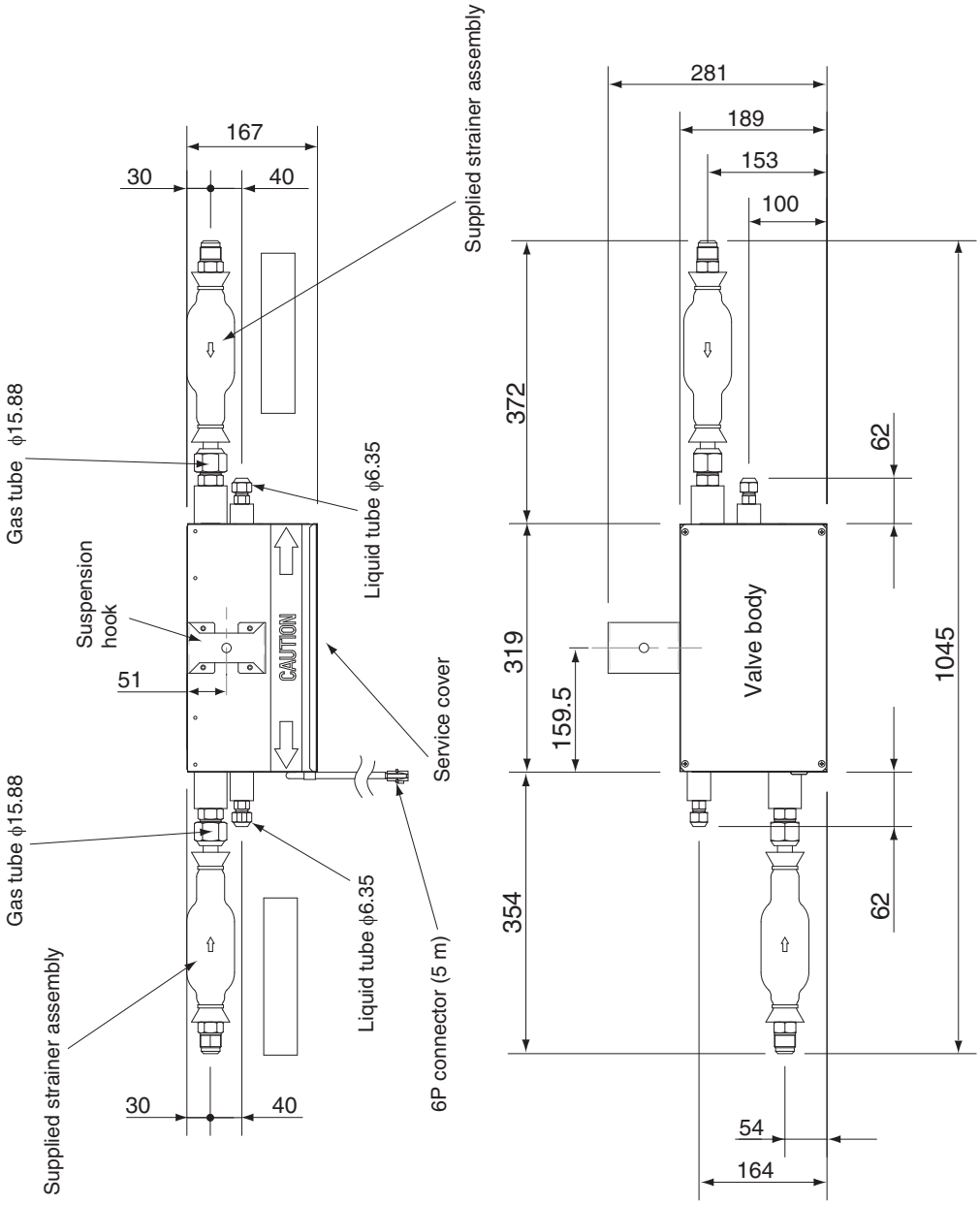

unit: mm

13. High Static Pressure Ducted Type (E1 Type)

13-6. Indoor Fan Performance

How to Read the Diagram

The vertical axis is the EXTERNAL STATIC PRESSURE (mmAq) while the horizontal axis represents the AIR FLOW (m^3/minute). The characteristic curve for the “H”, “Med”, and “Lo” fan speed control.
The name plate values are shown based on the “H” air flow. Therefore in the case of the 73 type the flow is 23 m^3/minute, while the EXTERNAL STATIC PRESSURE is 19 mmAq at “H” position. If the external static pressure is too great (due to long extension of duct, for example), the air flow volume may drop too low at each air outlet.

S-73ME1E5

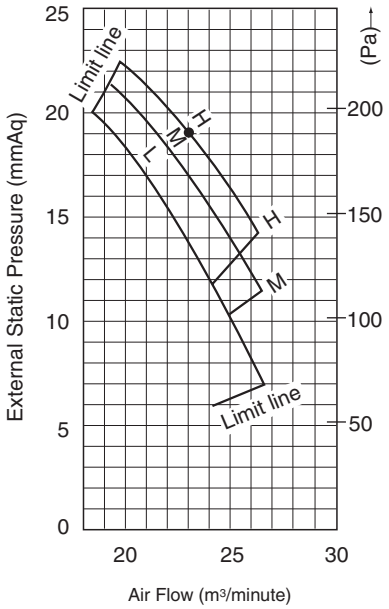

S-106ME1E5

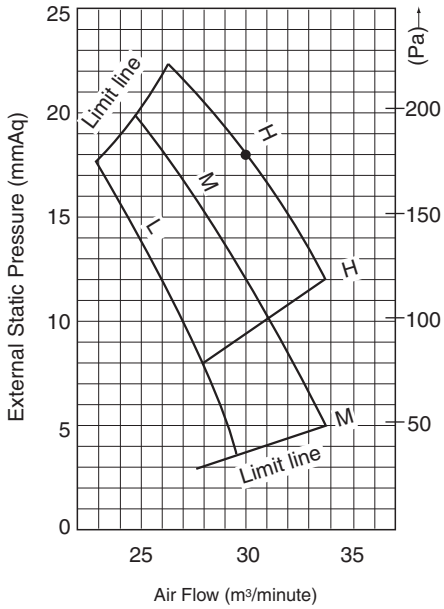

S-140ME1E5

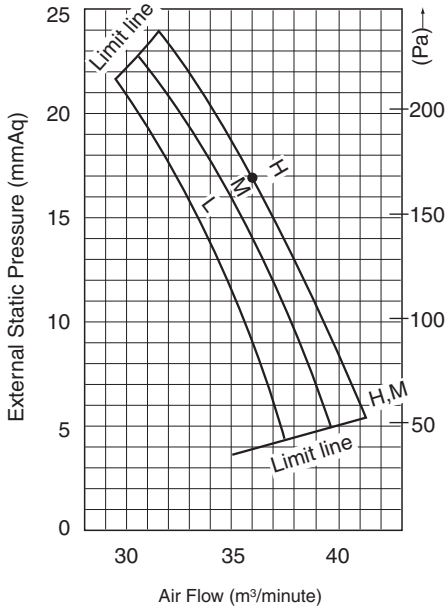

4

13. High Static Pressure Ducted Type (E1 Type)

Increasing the Fan Speed (280 type only)

If external static pressure is too great (due to long extension of ducts, for example), the air flow volume may drop too low at each air outlet. This problem may be solved by increasing the fan speed using the following procedure:

(1) Remove 4 screws on the electrical component box and remove the cover plate.

(2) Disconnect the fan motor sockets in the box.

(3) Take out 2 booster cables from option curton box (sockets at both ends).

(4) Securely connect 2 booster cable's sockets between the disconnected fan motor sockets in step 2 as shown in the Fig. 8-1.

(5) Place the cable neatly in the box and reinstall the cover plate.

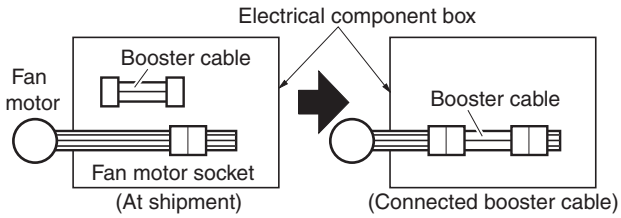

Fig. 8-1

Indoor Fan Performance

S-224ME1E5

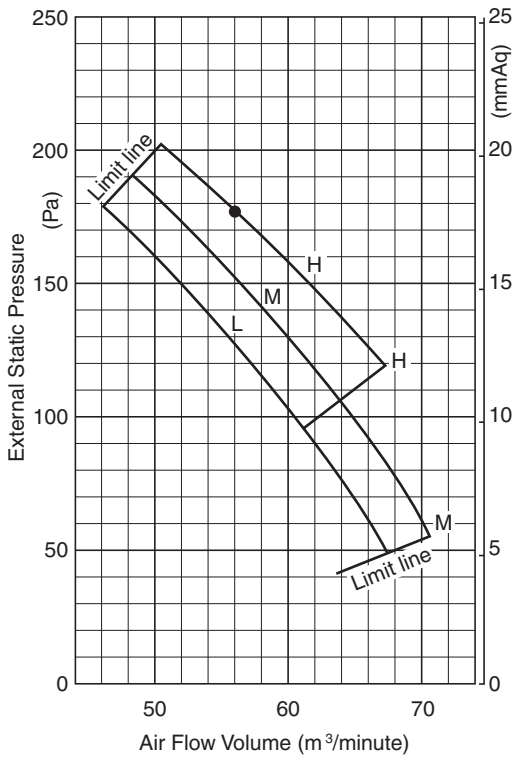

S-280ME1E5

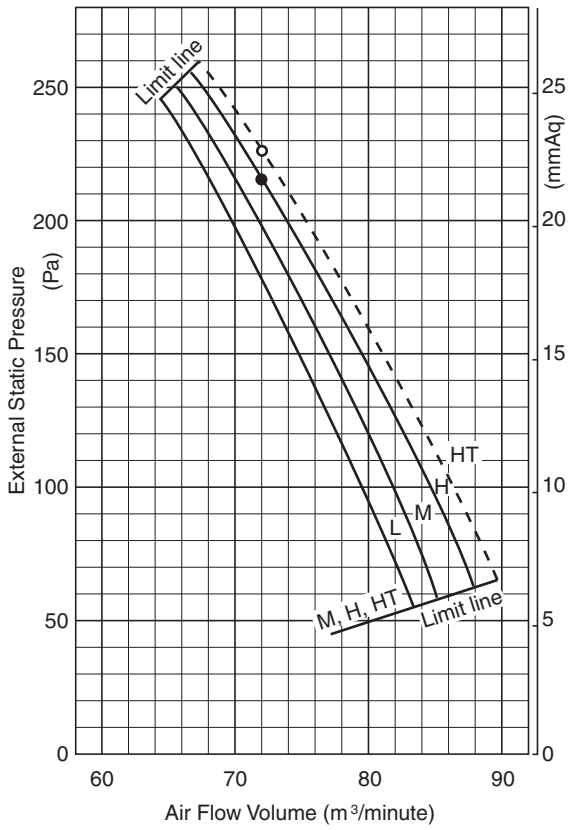

NOTE HT : Using the booster cable (280 type only)

H : At shipment

Fig. 8-2

14. Floor Standing Type (P1 Type)

14-1. Specifications

Unit specifications (A)

MODEL No.	Indoor Unit		S-22MP1E5					
POWER SOURCE			220 - 230 - 240 V, single-phase, 50/60 Hz					
PERFORMANCE			Cooling			Heating		
Capacity		kW	2.2			2.5		
		BTU / h	7,500			8,500		
Air circulation (Hi / Me / Lo)		m^3 / h	420 / 360 / 300					
Moisture removal (High)		Liters / h	1.0			–		
ELECTRICAL RATINGS								
Voltage rating		V	220	230	240	220	230	240
Available voltage range		V	198 - 264			198 - 264		
Running amperes		A	0.24	0.25	0.26	0.17	0.18	0.19
Power input		W	51	56	61	36	40	45
Power factor		%	97	97	98	96	97	99
Max. starting amperes		A	1	1	1	1	1	1
FEATURES								
Controls			Microprocessor					
Timer			ON / OFF Timer (Max. 72 h)					
Fan speeds			3 and Automatic control					
Air filter			Washable, easy access					
Refrigerant control			Electronic expansion valve					
Operation sound (Hi / Me / Lo)		dB-A	33 / 30 / 28					
Refrigerant tubing connections			Flare type					
Refrigerant tube diameter	Liquid tube	mm (in.)	6.35 (1 / 4)					
	Gas tube	mm (in.)	12.7 (1 / 2)					
Drain connection			20 A, OD26 mm					
Remote controller			Optional (Wired / Wireless)					
Refrigerant tubing kit / Accessories			Optional / –					
Color (Approximate value)			Munsell 10Y 9.3 / 0.4, RAL 9010-GL					
DIMENSIONS & WEIGHT			Unit dimensions			Package dimensions		
Unit dimensions	Height	mm (in.)	615 (24-7 / 32)			694 (27-5 / 16)		
	Width	mm (in.)	1065 (41-15 / 16)			1157 (45-9 / 16)		
	Depth	mm (in.)	230 (9-1 / 16)			312 (12-9 / 32)		
Net weight		kg (lbs.)	29 (64)					
Shipping weight		kg (lbs.)	31 (68)					
Shipping volume		m^3 (cu.ft)	0.251 (8.9)					

DATA SUBJECT TO CHANGE WITHOUT NOTICE.

Rated conditions

Cooling: Indoor air temperature 27°C DB / 19°C WB; Outdoor air temperature 35°C DB

Heating: Indoor air temperature 20°C DB; Outdoor air temperature 7°C DB / 6°C WB

14. Floor Standing Type (P1 Type)

Unit specifications (B)

MODEL No.	Indoor Unit		S-28MP1E5					
POWER SOURCE			220 - 230 - 240 V, single-phase, 50/60 Hz					
PERFORMANCE			Cooling			Heating		
Capacity		kW	2.8			3.2		
		BTU / h	9,600			11,000		
Air circulation (Hi / Me / Lo)		m^3 / h	420 / 360 / 300					
Moisture removal (High)		Liters / h	1.3			–		
ELECTRICAL RATINGS								
Voltage rating		V	220	230	240	220	230	240
Available voltage range		V	198 - 264			198 - 264		
Running amperes		A	0.24	0.25	0.26	0.17	0.18	0.19
Power input		W	51	56	61	36	40	45
Power factor		%	97	97	98	96	97	99
Max. starting amperes		A	1	1	1	1	1	1
FEATURES								
Controls			Microprocessor					
Timer			ON / OFF Timer (Max. 72 h)					
Fan speeds			3 and Automatic control					
Air filter			Washable, easy access					
Refrigerant control			Electronic expansion valve					
Operation sound (Hi / Me / Lo)		dB-A	33 / 30 / 28					
Refrigerant tubing connections			Flare type					
Refrigerant tube diameter	Liquid tube	mm (in.)	6.35 (1 / 4)					
	Gas tube	mm (in.)	12.7 (1 / 2)					
Drain connection			20 A, OD26 mm					
Remote controller			Optional (Wired / Wireless)					
Refrigerant tubing kit / Accessories			Optional / –					
Color (Approximate value)			Munsell 10Y 9.3 / 0.4, RAL 9010-GL					
DIMENSIONS & WEIGHT			Unit dimensions			Package dimensions		
Unit dimensions	Height	mm (in.)	615 (24-7 / 32)			694 (27-5 / 16)		
	Width	mm (in.)	1065 (41-15 / 16)			1157 (45-9 / 16)		
	Depth	mm (in.)	230 (9-1 / 16)			312 (12-9 / 32)		
Net weight		kg (lbs.)	29 (64)					
Shipping weight		kg (lbs.)	31 (68)					
Shipping volume		m^3 (cu.ft)	0.251 (8.9)					

DATA SUBJECT TO CHANGE WITHOUT NOTICE.

Rated conditions

Cooling: Indoor air temperature 27°C DB / 19°C WB; Outdoor air temperature 35°C DB

Heating: Indoor air temperature 20°C DB; Outdoor air temperature 7°C DB / 6°C WB

14. Floor Standing Type (P1 Type)

Unit specifications (C)

MODEL No.	Indoor Unit		S-36MP1E5					
POWER SOURCE			220 - 230 - 240 V, single-phase, 50/60 Hz					
PERFORMANCE			Cooling			Heating		
Capacity		kW	3.6			4.2		
		BTU / h	12,000			14,000		
Air circulation (Hi / Me / Lo)		m^3 / h	540 / 420 / 360					
Moisture removal (High)		Liters / h	1.7			–		
ELECTRICAL RATINGS								
Voltage rating		V	220	230	240	220	230	240
Available voltage range		V	198 - 264			198 - 264		
Running amperes		A	0.37	0.38	0.39	0.30	0.31	0.32
Power input		W	79	85	91	64	70	76
Power factor		%	97	97	98	96	98	99
Max. starting amperes		A	1	1	1	1	1	1
FEATURES								
Controls			Microprocessor					
Timer			ON / OFF Timer (Max. 72 h)					
Fan speeds			3 and Automatic control					
Air filter			Washable, easy access					
Refrigerant control			Electronic expansion valve					
Operation sound (Hi / Me / Lo)		dB-A	39 / 35 / 29					
Refrigerant tubing connections			Flare type					
Refrigerant tube diameter	Liquid tube	mm (in.)	6.35 (1 / 4)					
	Gas tube	mm (in.)	12.7 (1 / 2)					
Drain connection			20 A, OD26 mm					
Remote controller			Optional (Wired / Wireless)					
Refrigerant tubing kit / Accessories			Optional / –					
Color (Approximate value)			Munsell 10Y 9.3 / 0.4, RAL 9010-GL					
DIMENSIONS & WEIGHT			Unit dimensions			Package dimensions		
Unit dimensions	Height	mm (in.)	615 (24-7 / 32)			694 (27-5 / 16)		
	Width	mm (in.)	1065 (41-15 / 16)			1157 (45-9 / 16)		
	Depth	mm (in.)	230 (9-1 / 16)			312 (12-9 / 32)		
Net weight		kg (lbs.)	29 (64)					
Shipping weight		kg (lbs.)	31 (68)					
Shipping volume		m^3 (cu.ft)	0.251 (8.9)					

DATA SUBJECT TO CHANGE WITHOUT NOTICE.

Rated conditions

Cooling: Indoor air temperature 27°C DB / 19°C WB; Outdoor air temperature 35°C DB

Heating: Indoor air temperature 20°C DB; Outdoor air temperature 7°C DB / 6°C WB

14. Floor Standing Type (P1 Type)

Unit specifications (D)

MODEL No.	Indoor Unit		S-45MP1E5					
POWER SOURCE			220 - 230 - 240 V, single-phase, 50/60 Hz					
PERFORMANCE			Cooling			Heating		
Capacity		kW	4.5			5.0		
		BTU / h	15,000			17,000		
Air circulation (Hi / Me / Lo)		m^3 / h	720 / 540 / 480					
Moisture removal (High)		Liters / h	2.5			–		
ELECTRICAL RATINGS								
Voltage rating		V	220	230	240	220	230	240
Available voltage range		V	198 - 264			198 - 264		
Running amperes		A	0.54	0.56	0.58	0.37	0.41	0.43
Power input		W	116	126	136	79	91	101
Power factor		%	98	98	98	97	97	98
Max. starting amperes		A	1	1	1	1	1	1
FEATURES								
Controls			Microprocessor					
Timer			ON / OFF Timer (Max. 72 h)					
Fan speeds			3 and Automatic control					
Air filter			Washable, easy access					
Refrigerant control			Electronic expansion valve					
Operation sound (Hi / Me / Lo)		dB-A	38 / 35 / 31					
Refrigerant tubing connections			Flare type					
Refrigerant tube diameter	Liquid tube	mm (in.)	6.35 (1 / 4)					
	Gas tube	mm (in.)	12.7 (1 / 2)					
Drain connection			20 A, OD26 mm					
Remote controller			Optional (Wired / Wireless)					
Refrigerant tubing kit / Accessories			Optional / –					
Color (Approximate value)			Munsell 10Y 9.3 / 0.4, RAL 9010-GL					
DIMENSIONS & WEIGHT			Unit dimensions			Package dimensions		
Unit dimensions	Height	mm (in.)	615 (24-7 / 32)			694 (27-5 / 16)		
	Width	mm (in.)	1380 (54-11 / 32)			1472 (57-15 / 16)		
	Depth	mm (in.)	230 (9-1 / 16)			312 (12-9 / 32)		
Net weight		kg (lbs.)	39 (86)					
Shipping weight		kg (lbs.)	41 (90)					
Shipping volume		m^3 (cu.ft)	0.319 (11.3)					

DATA SUBJECT TO CHANGE WITHOUT NOTICE.

Rated conditions

Cooling: Indoor air temperature 27°C DB / 19°C WB; Outdoor air temperature 35°C DB

Heating: Indoor air temperature 20°C DB; Outdoor air temperature 7°C DB / 6°C WB

14. Floor Standing Type (P1 Type)

Unit specifications (E)

MODEL No.	Indoor Unit		S-56MP1E5					
POWER SOURCE			220 - 230 - 240 V, single-phase, 50/60 Hz					
PERFORMANCE			Cooling			Heating		
Capacity		kW	5.6			6.3		
		BTU / h	19,000			21,000		
Air circulation (Hi / Me / Lo)		m^3 / h	900 / 780 / 660					
Moisture removal (High)		Liters / h	2.5			–		
ELECTRICAL RATINGS								
Voltage rating		V	220	230	240	220	230	240
Available voltage range		V	198 - 264			198 - 264		
Running amperes		A	0.54	0.56	0.58	0.37	0.41	0.43
Power input		W	116	126	136	79	91	101
Power factor		%	98	98	98	97	97	98
Max. starting amperes		A	1	1	1	1	1	1
FEATURES								
Controls			Microprocessor					
Timer			ON / OFF Timer (Max. 72 h)					
Fan speeds			3 and Automatic control					
Air filter			Washable, easy access					
Refrigerant control			Electronic expansion valve					
Operation sound (Hi / Me / Lo)		dB-A	39 / 36 / 31					
Refrigerant tubing connections			Flare type					
Refrigerant tube diameter	Liquid tube	mm (in.)	6.35 (1 / 4)					
	Gas tube	mm (in.)	12.7 (1 / 2)					
Drain connection			20 A, OD26 mm					
Remote controller			Optional (Wired / Wireless)					
Refrigerant tubing kit / Accessories			Optional / –					
Color (Approximate value)			Munsell 10Y 9.3 / 0.4, RAL 9010-GL					
DIMENSIONS & WEIGHT			Unit dimensions			Package dimensions		
Unit dimensions	Height	mm (in.)	615 (24-7 / 32)			694 (27-5 / 16)		
	Width	mm (in.)	1380 (54-11 / 32)			1472 (57-15 / 16)		
	Depth	mm (in.)	230 (9-1 / 16)			312 (12-9 / 32)		
Net weight		kg (lbs.)	39 (86)					
Shipping weight		kg (lbs.)	41 (90)					
Shipping volume		m^3 (cu.ft)	0.319 (11.3)					

DATA SUBJECT TO CHANGE WITHOUT NOTICE.

Rated conditions

Cooling: Indoor air temperature 27°C DB / 19°C WB; Outdoor air temperature 35°C DB

Heating: Indoor air temperature 20°C DB; Outdoor air temperature 7°C DB / 6°C WB

14. Floor Standing Type (P1 Type)

Unit specifications (F)

MODEL No.	Indoor Unit		S-71MP1E5					
POWER SOURCE			220 - 230 - 240 V, single-phase, 50/60 Hz					
PERFORMANCE			Cooling			Heating		
Capacity		kW	7.1			8.0		
		BTU / h	24,000			27,000		
Air circulation (Hi / Me / Lo)		m^3 / h	1,020 / 840 / 720					
Moisture removal (High)		Liters / h	3.5			–		
ELECTRICAL RATINGS								
Voltage rating		V	220	230	240	220	230	240
Available voltage range		V	198 - 264			198 - 264		
Running amperes		A	0.70	0.72	0.73	0.52	0.54	0.56
Power input		W	150	160	170	110	120	130
Power factor		%	97	97	97	96	97	97
Max. starting amperes		A	1	1	1	1	1	1
FEATURES								
Controls			Microprocessor					
Timer			ON / OFF Timer (Max. 72 h)					
Fan speeds			3 and Automatic control					
Air filter			Washable, easy access					
Refrigerant control			Electronic expansion valve					
Operation sound (Hi / Me / Lo)		dB-A	41 / 38 / 35					
Refrigerant tubing connections			Flare type					
Refrigerant tube diameter	Liquid tube	mm (in.)	9.52 (3 / 8)					
	Gas tube	mm (in.)	15.88 (5 / 8)					
Drain connection			20 A, OD26 mm					
Remote controller			Optional (Wired / Wireless)					
Refrigerant tubing kit / Accessories			Optional / –					
Color (Approximate value)			Munsell 10Y 9.3 / 0.4, RAL 9010-GL					
DIMENSIONS & WEIGHT			Unit dimensions			Package dimensions		
Unit dimensions	Height	mm (in.)	615 (24-7 / 32)			694 (27-5 / 16)		
	Width	mm (in.)	1380 (54-11 / 32)			1472 (57-15 / 16)		
	Depth	mm (in.)	230 (9-1 / 16)			312 (12-9 / 32)		
Net weight		kg (lbs.)	39 (86)					
Shipping weight		kg (lbs.)	41 (90)					
Shipping volume		m^3 (cu.ft)	0.319 (11.3)					

DATA SUBJECT TO CHANGE WITHOUT NOTICE.

Rated conditions

Cooling: Indoor air temperature 27°C DB / 19°C WB; Outdoor air temperature 35°C DB

Heating: Indoor air temperature 20°C DB; Outdoor air temperature 7°C DB / 6°C WB

14. Floor Standing Type (P1 Type)

14-2. Major Component Specifications

Indoor unit (A)

MODEL No.			S-22MP1E5
Power source			220 - 230 - 240 V, single-phase, 50/60 Hz
Controller P.C.B. Ass'y			CR-UXRP71B-P (Microprocessor)
Fan (Number...diameter)		mm	Centrifugal (1...ø153)
Fan motor			
	Model...Nominal output	W	KFT6Q-11A3P...10W
	Power source		220 - 230 - 240 V / single-phase / 50 Hz
	No. of pole...r.p.m. (230V, High)	rpm	6P... 831
	Coil resistance (Ambient temperature 20°C)	Ω	BRN – WHT : 370.2 WHT – VLT : 105.4 VLT – ORG : 67.05 ORG – YEL : 168.0 YEL – PNK : 92.16
	Safety device		
	Operating temperature	Open °C	130 ± 5
		Close °C	(115 ± 5)
	Run capacitor	VAC, μF	440 VAC, 1.0 μF
Electronic expansion valve			
	Coil		UKV-U030E
	Coil resistance (at 20°C)	Ω	ORG – GRY : 46 RED – GRY : 46 YEL – GRY : 46 BLK – GRY : 46
	Valve body		UKV-18D31
Heat exchanger			
	Coil		Aluminium plate fin / Copper tube
	Rows...fin pitch	mm	3...2.0
	Face area	m^2	0.102

4

14. Floor Standing Type (P1 Type)

Indoor unit (B)

MODEL No.			**S-28MP1E5**
Power source			220 - 230 - 240 V, single-phase, 50/60 Hz
Controller P.C.B. Ass'y			CR-UXRP71B-P (Microprocessor)
Fan (Number...diameter)		mm	Centrifugal (1...ø153)
Fan motor			
	Model...Nominal output	W	KFT6Q-11A3P...10 W
	Power source		220 - 230 - 240 V / single-phase / 50 Hz
	No. of pole...r.p.m. (230V, High)	rpm	6P... 831
	Coil resistance (Ambient temperature 20°C)	Ω	BRN – WHT : 370.2 WHT – VLT : 105.4 VLT – ORG : 67.05 ORG – YEL : 168.0 YEL – PNK : 92.16
	Safety device		
	Operating temperature	Open °C	130 ± 5
		Close °C	(115 ± 5)
	Run capacitor	VAC, μF	440 VAC, 1.0 μF
Electronic expansion valve			
	Coil		UKV-U030E
	Coil resistance (at 20°C)	Ω	ORG – GRY : 46 RED – GRY : 46 YEL – GRY : 46 BLK – GRY : 46
	Valve body		UKV-18D31
Heat exchanger			
	Coil		Aluminium plate fin / Copper tube
	Rows...fin pitch	mm	3...2.0
	Face area	m^2	0.102

4

14. Floor Standing Type (P1 Type)

Indoor unit (C)

MODEL No.			**S-36MP1E5**
Power source			220 - 230 - 240 V, single-phase, 50/60 Hz
Controller P.C.B. Ass'y			CR-UXRP71B-P (Microprocessor)
Fan (Number...diameter)		mm	Centrifugal (1...ø153)
Fan motor			
	Model...Nominal output	W	KFT4Q-21B3P...20 W
	Power source		220 - 230 - 240 V / single-phase / 50 Hz
	No. of pole...r.p.m. (230V, High)	rpm	4P... 1,102
	Coil resistance (Ambient temperature 20°C)	Ω	BRN – WHT : 217.7 WHT – VLT : 37.33 VLT – ORG : 22.48 ORG – YEL : 37.88 YEL – PNK : 21.82
	Safety device		
	Operating temperature	Open °C	130 ± 5
		Close °C	(115 ± 5)
	Run capacitor	VAC, μF	440 VAC, 2.0 μF
Electronic expansion valve			
	Coil		UKV-U030E
	Coil resistance (at 20°C)	Ω	ORG – GRY : 46 RED – GRY : 46 YEL – GRY : 46 BLK – GRY : 46
	Valve body		UKV-18D31
Heat exchanger			
	Coil		Aluminium plate fin / Copper tube
	Rows...fin pitch	mm	3...2.0
	Face area	m^2	0.102

4

14. Floor Standing Type (P1 Type)

Indoor unit (D)

MODEL No.			**S-45MP1E5**
Power source			220 - 230 - 240 V, single-phase, 50/60 Hz
Controller P.C.B. Ass'y			CR-UXRP71B-P (Microprocessor)
Fan (Number...diameter)		mm	Centrifugal (2...ø153)
Fan motor			
	Model...Nominal output	W	KFG4Q-61C3P...20 W
	Power source		220 - 230 - 240 V / single-phase / 50 Hz
	No. of pole...r.p.m. (230V, High)	rpm	4P... 1,066
	Coil resistance (Ambient temperature 20°C)	Ω	BRN – WHT : 67.62 WHT – VLT : 18.47 VLT – ORG : 10.10 ORG – YEL : 17.36 YEL – PNK : 5.18
	Safety device		
	Operating temperature	Open °C	130 ± 5
		Close °C	(115 ± 5)
	Run capacitor	VAC, μF	440 VAC, 2.0 μF
Electronic expansion valve			
	Coil		UKV-U030E
	Coil resistance (at 20°C)	Ω	ORG – GRY : 46 RED – GRY : 46 YEL – GRY : 46 BLK – GRY : 46
	Valve body		UKV-25D32
Heat exchanger			
	Coil		Aluminium plate fin / Copper tube
	Rows...fin pitch	mm	3...2.0
	Face area	m^2	0.165

4

14. Floor Standing Type (P1 Type)

Indoor unit (E)

MODEL No.			**S-56MP1E5**
Power source			220 - 230 - 240 V, single-phase, 50/60 Hz
Controller P.C.B. Ass'y			CR-UXRP71B-P (Microprocessor)
Fan (Number...diameter)		mm	Centrifugal (2...ø153)
Fan motor			
	Model...Nominal output	W	KFG4Q-61C3P...30 W
	Power source		220 - 230 - 240 V / single-phase / 50 Hz
	No. of pole...r.p.m. (230V, High)	rpm	4P... 1,066
	Coil resistance (Ambient temperature 20°C)	Ω	BRN – WHT : 67.62 WHT – VLT : 18.47 VLT – ORG : 10.10 ORG – YEL : 17.36 YEL – PNK : 5.18
	Safety device		
	Operating temperature	Open °C	130 ± 5
		Close °C	(115 ± 5)
	Run capacitor	VAC, μF	440 VAC, 2.0 μF
Electronic expansion valve			
	Coil		UKV-U030E
	Coil resistance (at 20°C)	Ω	ORG – GRY : 46 RED – GRY : 46 YEL – GRY : 46 BLK – GRY : 46
	Valve body		UKV-25D32
Heat exchanger			
	Coil		Aluminium plate fin / Copper tube
	Rows...fin pitch	mm	3...2.0
	Face area	m^2	0.165

4

14. Floor Standing Type (P1 Type)

Indoor unit (F)

MODEL No.			**S-71MP1E5**
Power source			220 - 230 - 240 V, single-phase, 50/60 Hz
Controller P.C.B. Ass'y			CR-UXRP71B-P (Microprocessor)
Fan (Number...diameter)		mm	Centrifugal (2...ø153)
Fan motor			
	Model...Nominal output	W	KFG4Q-61C3P...60 W
	Power source		220 - 230 - 240 V / single-phase / 50 Hz
	No. of pole...r.p.m. (230V, High)	rpm	4P... 1,066
	Coil resistance (Ambient temperature 20°C)	Ω	BRN – WHT : 67.62 WHT – VLT : 18.47 VLT – ORG : 10.10 ORG – YEL : 17.36 YEL – PNK : 5.18
	Safety device		
	Operating temperature	Open °C	130 ± 5
		Close °C	(115 ± 5)
	Run capacitor	VAC, μF	440 VAC, 3.5 μF
Electronic expansion valve			
	Coil		UKV-U030E
	Coil resistance (at 20°C)	Ω	ORG – GRY : 46 RED – GRY : 46 YEL – GRY : 46 BLK – GRY : 46
	Valve body		UKV-25D32
Heat exchanger			
	Coil		Aluminium plate fin / Copper tube
	Rows...fin pitch	mm	3...2.0
	Face area	m^2	0.165

4

14. Floor Standing Type (P1 Type)

14-3. Dimensional Data

Indoor unit: S-22MP1E5 / 28MP1E5 / 36MP1E5 / 45MP1E5 / 56MP1E5 / 71MP1E5

Indoor unit	A	B	C	Liquid tube	Gas tube
S-22MP1E5 / 28MP1E5 /36MP1E5	1,065	665	632	ø6.35	ø12.7
S-45MP1E5	1380	980	947		
S-56MP1E5					
S-71MP1E5				ø9.52	ø15.88

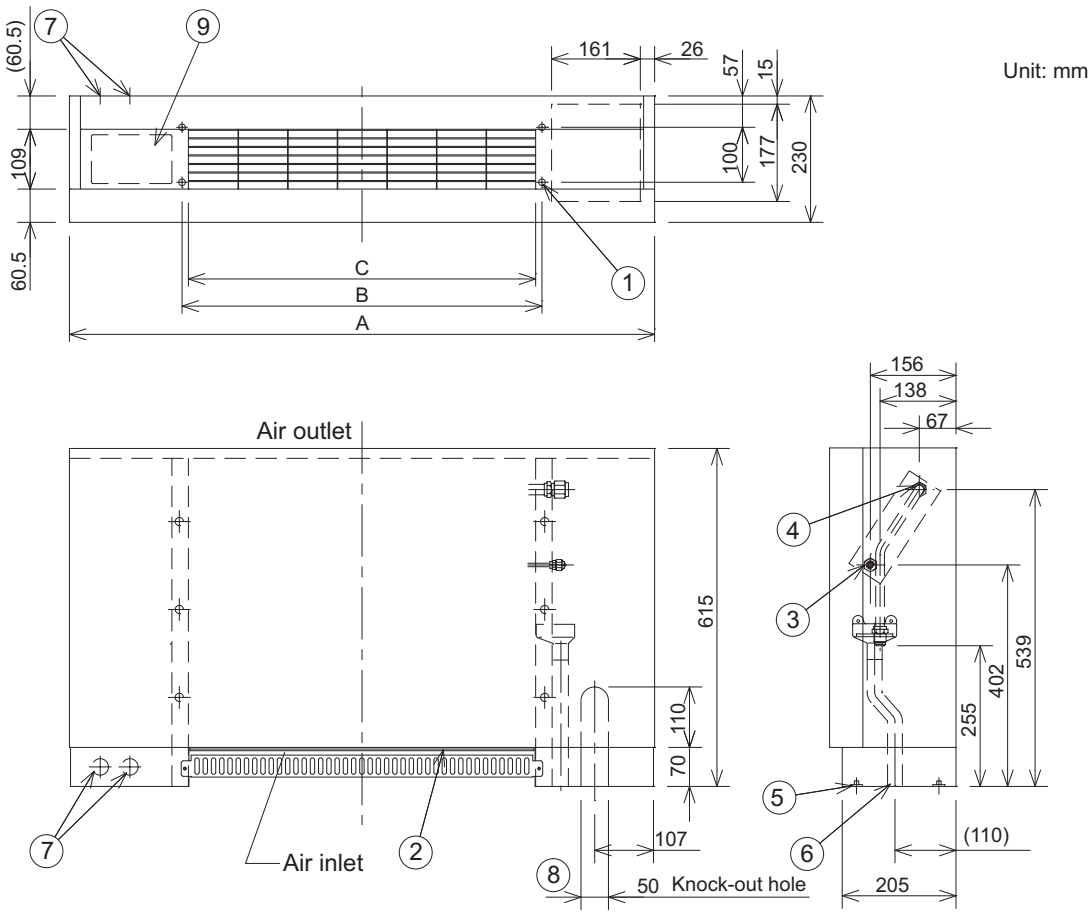

① 4-ø12 hole (For fastening the indoor unit to the floor with screws.)
② Air filter
③ Refrigerant connection outlet (liquid tube)
④ Refrigerant connection outlet (gas tube)
⑤ Level adjusting bolt
⑥ Drain outlet (20 A)
⑦ Power cord outlet (downward, rear)
⑧ Refrigerant tubing outlet (downward, rear)
⑨ Location for mounting the remote controller (Remote controller can be attached within the room.)

14. Floor Standing Type (P1 Type)

14-4. Noise Criterion Curves

MODEL	: S-22MP1E5/28MP1E5
SOUND LEVEL	: HIGH 33 dB(A), NC 27
	LOW 28 dB(A), NC 23
CONDITION	In front of the unit 1 m, HEIGHT 1 m
SOURCE	: 220 - 230- 240 V, Single-phase, 50/60 Hz

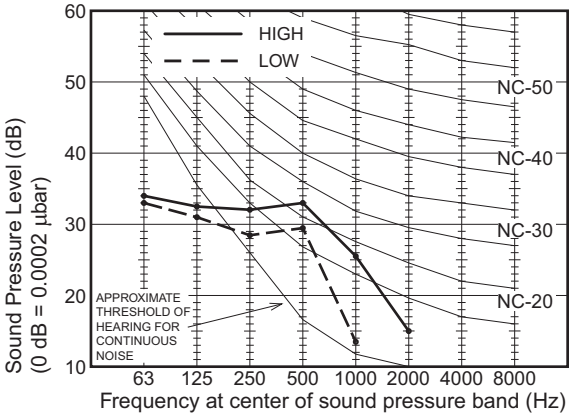

MODEL	: S-36MP1E5
SOUND LEVEL	: HIGH 39 dB(A), NC 33
	LOW 29 dB(A), NC 23
CONDITION	: In front of the unit 1 m, HEIGHT 1 m
SOURCE	: 220 - 230- 240 V, Single-phase, 50/60 Hz

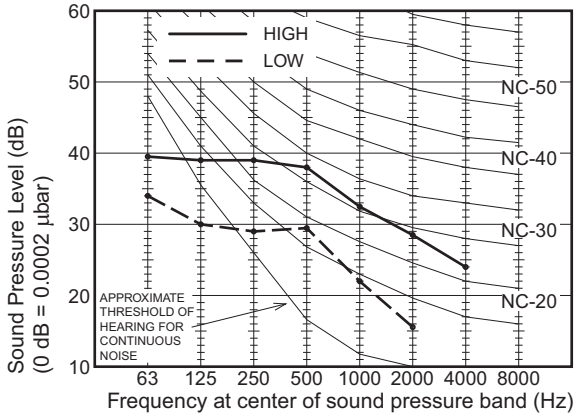

MODEL	: S-45MP1E5
SOUND LEVEL	: HIGH 38 dB(A),
	LOW 31 dB(A),
CONDITION	In front of the unit 1 m, HEIGHT 1 m
SOURCE	: 220 - 230- 240 V, Single-phase, 50/60 Hz

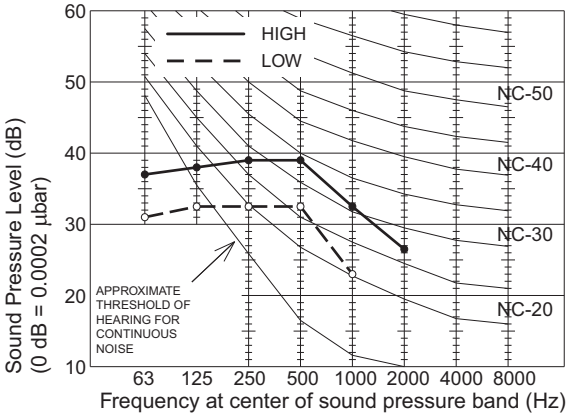

MODEL	: S-56MP1E5
SOUND LEVEL	: HIGH 39 dB(A), NC 34
	LOW 31 dB(A), NC 26
CONDITION	: In front of the unit 1 m, HEIGHT 1 m
SOURCE	: 220 - 230- 240 V, Single-phase, 50/60 Hz

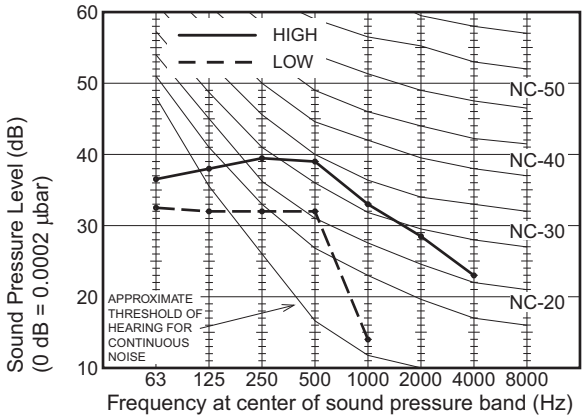

MODEL	: S-71MP1E5
SOUND LEVEL	: HIGH 41 dB(A), NC 37
	LOW 35 dB(A), NC 30
CONDITION	: In front of the unit 1 m, HEIGHT 1 m
SOURCE	: 220 - 230- 240 V, Single-phase, 50/60 Hz

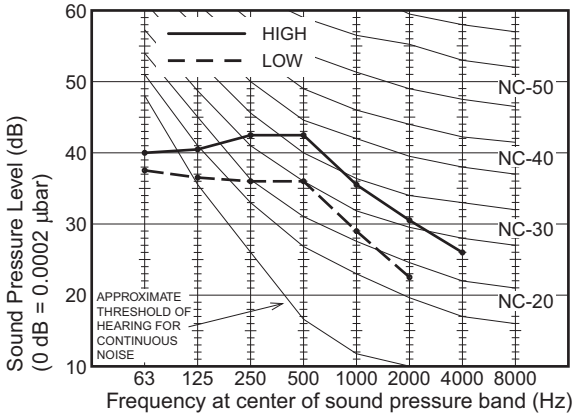

14. Floor Standing Type (P1 Type)

14-5. Air Flow Distance Chart

S-22MP1E5 / 28MP1E5

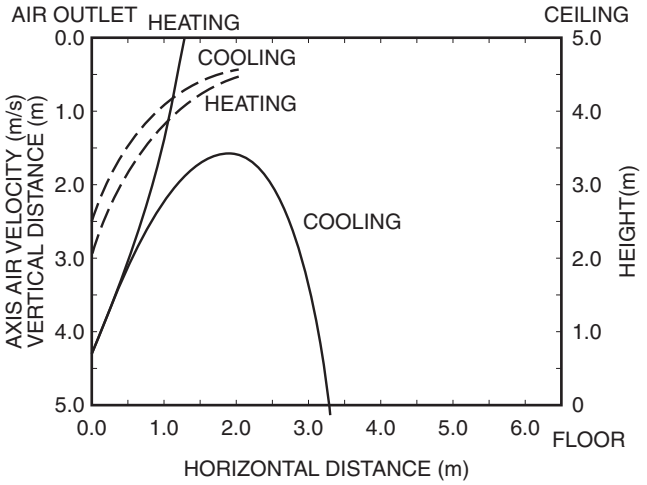

S-36MP1E5

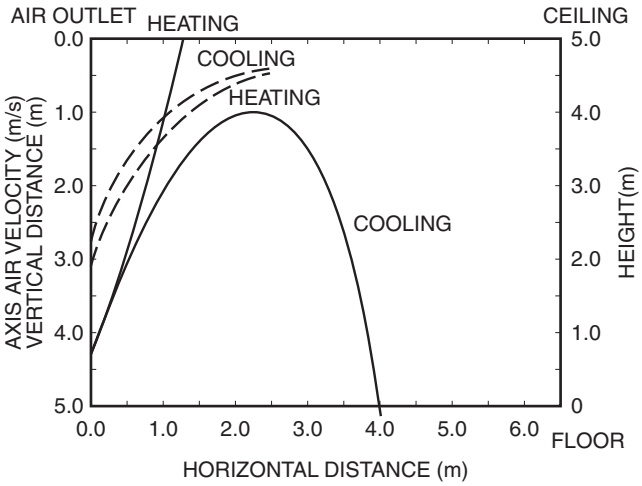

S-45MP1E5 / 56MP1E5

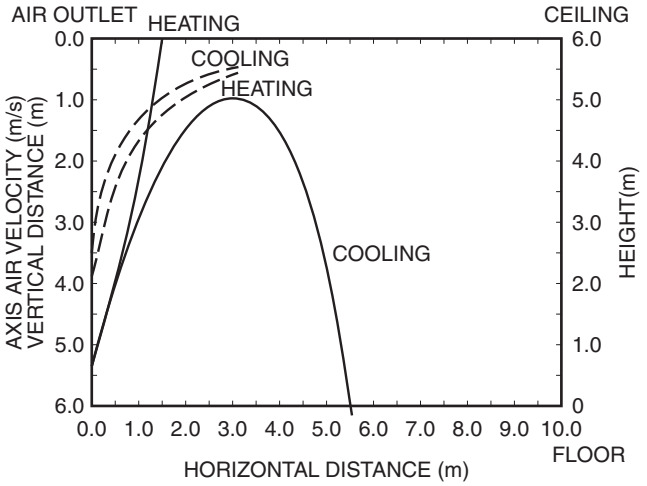

S-71MP1E5

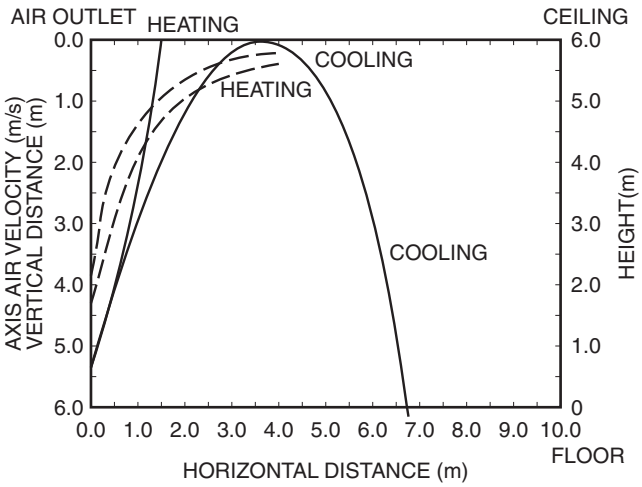

Air conditioner fan speed : Hi
Room air temp. : 27°C DB in Cooling mode
20°C DB in Heating mode

4

15. Concealed Floor Standing Type (R1 Type)

15-1. Specifications

Unit specifications (A)

MODEL No.	Indoor Unit		S-22MR1E5					
POWER SOURCE			220 - 230 - 240 V, single-phase, 50/60 Hz					
PERFORMANCE			Cooling			Heating		
Capacity		kW	2.2			2.5		
		BTU / h	7,500			8,500		
Air circulation (Hi / Me / Lo)		m^3 / h	420 / 360 / 300					
Moisture removal (High)		Liters / h	1.0			–		
ELECTRICAL RATINGS								
Voltage rating		V	220	230	240	220	230	240
Available voltage range		V	198 - 264			198 - 264		
Running amperes		A	0.24	0.25	0.26	0.17	0.18	0.19
Power input		W	51	56	61	36	40	45
Power factor		%	97	97	98	96	97	99
Max. starting amperes		A	1	1	1	1	1	1
FEATURES								
Controls			Microprocessor					
Timer			ON / OFF Timer (Max. 72 h)					
Fan speeds			3 and Automatic control					
Air filter			Washable, easy access					
Refrigerant control			Electronic expansion valve					
Operation sound (Hi / Me / Lo)		dB-A	33 / 30 / 28					
Refrigerant tubing connections			Flare type					
Refrigerant tube diameter	Liquid tube	mm (in.)	6.35 (1 / 4)					
	Gas tube	mm (in.)	12.7 (1 / 2)					
Drain connection			20 A, OD26 mm					
Remote controller			Optional (Wired / Wireless)					
Refrigerant tubing kit / Accessories			Optional / –					
Color (Approximate value)			Munsell 10Y 9.3 / 0.4, RAL 9010-GL					
DIMENSIONS & WEIGHT			Unit dimensions			Package dimensions		
Unit dimensions	Height	mm (in.)	616 (24-1 / 4)			679 (26-23 / 32)		
	Width	mm (in.)	904 (35-19 / 32)			976 (38-7 / 16)		
	Depth	mm (in.)	229 (9-1 / 32)			312 (12-9 / 32)		
Net weight		kg (lbs.)	21 (46)					
Shipping weight		kg (lbs.)	23 (51)					
Shipping volume		m^3 (cu.ft)	0.207 (7.3)					

DATA SUBJECT TO CHANGE WITHOUT NOTICE.

Rated conditions

Cooling: Indoor air temperature 27°C DB / 19°C WB; Outdoor air temperature 35°C DB

Heating: Indoor air temperature 20°C DB; Outdoor air temperature 7°C DB / 6°C WB

15. Concealed Floor Standing Type (R1 Type)

Unit specifications (B)

MODEL No.	Indoor Unit		S-28MR1E5					
POWER SOURCE			220 - 230 - 240 V, single-phase, 50/60 Hz					
PERFORMANCE			Cooling			Heating		
Capacity		kW	2.8			3.2		
		BTU / h	9,600			11,000		
Air circulation (Hi / Me / Lo)		m^3 / h	420 / 360 / 300					
Moisture removal (High)		Liters / h	1.3			–		
ELECTRICAL RATINGS								
Voltage rating		V	220	230	240	220	230	240
Available voltage range		V	198 - 264			198 - 264		
Running amperes		A	0.24	0.25	0.26	0.17	0.18	0.19
Power input		W	51	56	61	36	40	45
Power factor		%	97	97	98	96	97	99
Max. starting amperes		A	1	1	1	1	1	1
FEATURES								
Controls			Microprocessor					
Timer			ON / OFF Timer (Max. 72 h)					
Fan speeds			3 and Automatic control					
Air filter			Washable, easy access					
Refrigerant control			Electronic expansion valve					
Operation sound (Hi / Me / Lo)		dB-A	33 / 30 / 28					
Refrigerant tubing connections			Flare type					
Refrigerant tube diameter	Liquid tube	mm (in.)	6.35 (1 / 4)					
	Gas tube	mm (in.)	12.7 (1 / 2)					
Drain connection			20 A, OD26 mm					
Remote controller			Optional (Wired / Wireless)					
Refrigerant tubing kit / Accessories			Optional / –					
Color (Approximate value)			Munsell 10Y 9.3 / 0.4, RAL 9010-GL					
DIMENSIONS & WEIGHT			Unit dimensions			Package dimensions		
Unit dimensions	Height	mm (in.)	616 (24-1 / 4)			679 (26-23 / 32)		
	Width	mm (in.)	904 (35-19 / 32)			976 (38-7 / 16)		
	Depth	mm (in.)	229 (9-1 / 32)			312 (12-9 / 32)		
Net weight		kg (lbs.)	21 (46)					
Shipping weight		kg (lbs.)	23 (51)					
Shipping volume		m^3 (cu.ft)	0.207 (7.3)					

DATA SUBJECT TO CHANGE WITHOUT NOTICE.

Rated conditions

Cooling: Indoor air temperature 27°C DB / 19°C WB; Outdoor air temperature 35°C DB

Heating: Indoor air temperature 20°C DB; Outdoor air temperature 7°C DB / 6°C WB

15. Concealed Floor Standing Type (R1 Type)

Unit specifications (C)

MODEL No.	Indoor Unit		S-36MR1E5					
POWER SOURCE			220 - 230 - 240 V, single-phase, 50/60 Hz					
PERFORMANCE			Cooling			Heating		
Capacity		kW	3.6			4.2		
		BTU / h	12,000			14,000		
Air circulation (Hi / Me / Lo)		m^3 / h	540 / 420 / 360					
Moisture removal (High)		Liters / h	1.7			–		
ELECTRICAL RATINGS								
Voltage rating		V	220	230	240	220	230	240
Available voltage range		V	198 - 264			198 - 264		
Running amperes		A	0.37	0.38	0.39	0.30	0.31	0.32
Power input		W	79	85	91	64	70	76
Power factor		%	97	97	97	97	98	99
Max. starting amperes		A	1	1	1	1	1	1
FEATURES								
Controls			Microprocessor					
Timer			ON / OFF Timer (Max. 72 h)					
Fan speeds			3 and Automatic control					
Air filter			Washable, easy access					
Refrigerant control			Electronic expansion valve					
Operation sound (Hi / Me / Lo)		dB-A	39 / 35 / 29					
Refrigerant tubing connections			Flare type					
Refrigerant tube diameter	Liquid tube	mm (in.)	6.35 (1 / 4)					
	Gas tube	mm (in.)	12.7 (1 / 2)					
Drain connection			20 A, OD26 mm					
Remote controller			Optional (Wired / Wireless)					
Refrigerant tubing kit / Accessories			Optional / –					
Color (Approximate value)			Munsell 10Y 9.3 / 0.4, RAL 9010-GL					
DIMENSIONS & WEIGHT			Unit dimensions			Package dimensions		
Unit dimensions	Height	mm (in.)	616 (24-1 / 4)			679 (26-23 / 32)		
	Width	mm (in.)	904 (35-19 / 32)			976 (38-7 / 16)		
	Depth	mm (in.)	229 (9-1 / 32)			312 (12-9 / 32)		
Net weight		kg (lbs.)	21 (46)					
Shipping weight		kg (lbs.)	23 (51)					
Shipping volume		m^3 (cu.ft)	0.207 (7.3)					

DATA SUBJECT TO CHANGE WITHOUT NOTICE.

Rated conditions

Cooling: Indoor air temperature 27°C DB / 19°C WB; Outdoor air temperature 35°C DB

Heating: Indoor air temperature 20°C DB; Outdoor air temperature 7°C DB / 6°C WB

15. Concealed Floor Standing Type (R1 Type)

Unit specifications (D)

MODEL No.	Indoor Unit		S-45MR1E5					
POWER SOURCE			220 - 230 - 240 V, single-phase, 50/60 Hz					
PERFORMANCE			Cooling			Heating		
Capacity		kW	4.5			5.0		
		BTU / h	15,000			17,000		
Air circulation (Hi / Me / Lo)		m^3 / h	720 / 540 / 480					
Moisture removal (High)		Liters / h	2.5			–		
ELECTRICAL RATINGS								
Voltage rating		V	220	230	240	220	230	240
Available voltage range		V	198 - 264			198 - 264		
Running amperes		A	0.54	0.56	0.58	0.37	0.41	0.43
Power input		W	116	126	136	79	91	101
Power factor		%	98	98	98	97	97	98
Max. starting amperes		A	1	1	1	1	1	1
FEATURES								
Controls			Microprocessor					
Timer			ON / OFF Timer (Max. 72 h)					
Fan speeds			3 and Automatic control					
Air filter			Washable, easy access					
Refrigerant control			Electronic expansion valve					
Operation sound (Hi / Me / Lo)		dB-A	38 / 35 / 31					
Refrigerant tubing connections			Flare type					
Refrigerant tube diameter	Liquid tube	mm (in.)	6.35 (1 / 4)					
	Gas tube	mm (in.)	12.7 (1 / 2)					
Drain connection			20 A, OD26 mm					
Remote controller			Optional (Wired / Wireless)					
Refrigerant tubing kit / Accessories			Optional / –					
Color (Approximate value)			Munsell 10Y 9.3 / 0.4, RAL 9010-GL					
DIMENSIONS & WEIGHT			Unit dimensions			Package dimensions		
Unit dimensions	Height	mm (in.)	616 (24-1 / 4)			679 (26-23 / 32)		
	Width	mm (in.)	1219 (48)			1291 (50-13 / 16)		
	Depth	mm (in.)	229 (9-1 / 32)			312 (12-9 / 32)		
Net weight		kg (lbs.)	28 (62)					
Shipping weight		kg (lbs.)	31 (68)					
Shipping volume		m^3 (cu.ft)	0.273 (9.6)					

DATA SUBJECT TO CHANGE WITHOUT NOTICE.

Rated conditions

Cooling: Indoor air temperature 27°C DB / 19°C WB; Outdoor air temperature 35°C DB

Heating: Indoor air temperature 20°C DB; Outdoor air temperature 7°C DB / 6°C WB

15. Concealed Floor Standing Type (R1 Type)

Unit specifications (E)

MODEL No.	Indoor Unit		S-56MR1E5					
POWER SOURCE			220 - 230 - 240 V, single-phase, 50/60 Hz					
PERFORMANCE			Cooling			Heating		
Capacity		kW	5.6			6.3		
		BTU / h	19,000			21,000		
Air circulation (Hi / Me / Lo)		m^3 / h	900 / 780 / 660					
Moisture removal (High)		Liters / h	2.5			–		
ELECTRICAL RATINGS								
Voltage rating		V	220	230	240	220	230	240
Available voltage range		V	198 - 264			198 - 264		
Running amperes		A	0.54	0.56	0.58	0.37	0.41	0.43
Power input		W	116	126	136	79	91	101
Power factor		%	98	98	98	97	97	98
Max. starting amperes		A	1	1	1	1	1	1
FEATURES								
Controls			Microprocessor					
Timer			ON / OFF Timer (Max. 72 h)					
Fan speeds			3 and Automatic control					
Air filter			Washable, easy access					
Refrigerant control			Electronic expansion valve					
Operation sound (Hi / Me / Lo)		dB-A	39 / 36 / 31					
Refrigerant tubing connections			Flare type					
Refrigerant tube diameter	Liquid tube	mm (in.)	6.35 (1 / 4)					
	Gas tube	mm (in.)	12.7 (1 / 2)					
Drain connection			20 A, OD26 mm					
Remote controller			Optional (Wired / Wireless)					
Refrigerant tubing kit / Accessories			Optional / –					
Color (Approximate value)			Munsell 10Y 9.3 / 0.4, RAL 9010-GL					
DIMENSIONS & WEIGHT			Unit dimensions			Package dimensions		
Unit dimensions	Height	mm (in.)	616 (24-1 / 4)			679 (26-23 / 32)		
	Width	mm (in.)	1219 (48)			1291 (50-13 / 16)		
	Depth	mm (in.)	229 (9-1 / 32)			312 (12-9 / 32)		
Net weight		kg (lbs.)	28 (62)					
Shipping weight		kg (lbs.)	31 (68)					
Shipping volume		m^3 (cu.ft)	0.273 (9.6)					

DATA SUBJECT TO CHANGE WITHOUT NOTICE.

Rated conditions

Cooling: Indoor air temperature 27°C DB / 19°C WB; Outdoor air temperature 35°C DB

Heating: Indoor air temperature 20°C DB; Outdoor air temperature 7°C DB / 6°C WB

15. Concealed Floor Standing Type (R1 Type)

Unit specifications (F)

MODEL No.	Indoor Unit		S-71MR1E5					
POWER SOURCE			220 - 230 - 240 V, single-phase, 50/60 Hz					
PERFORMANCE			Cooling			Heating		
Capacity		kW	7.1			8.0		
		BTU / h	24,000			27,000		
Air circulation (Hi / Me / Lo)		m^3 / h	1020 / 840 / 720					
Moisture removal (High)		Liters / h	3.5			–		
ELECTRICAL RATINGS								
Voltage rating		V	220	230	240	220	230	240
Available voltage range		V	198 - 264			198 - 264		
Running amperes		A	0.70	0.72	0.73	0.52	0.54	0.56
Power input		W	150	160	170	110	120	130
Power factor		%	97	97	97	96	97	97
Max. starting amperes		A	1	1	1	1	1	1
FEATURES								
Controls			Microprocessor					
Timer			ON / OFF Timer (Max. 72 h)					
Fan speeds			3 and Automatic control					
Air filter			Washable, easy access					
Refrigerant control			Electronic expansion valve					
Operation sound (Hi / Me / Lo)		dB-A	41 / 38 / 35					
Refrigerant tubing connections			Flare type					
Refrigerant tube diameter	Liquid tube	mm (in.)	9.52 (3 / 8)					
	Gas tube	mm (in.)	15.88 (5 / 8)					
Drain connection			20 A, OD26 mm					
Remote controller			Optional (Wired / Wireless)					
Refrigerant tubing kit / Accessories			Optional / –					
Color (Approximate value)			Munsell 10Y 9.3 / 0.4, RAL 9010-GL					
DIMENSIONS & WEIGHT			Unit dimensions			Package dimensions		
Unit dimensions	Height	mm (in.)	616 (24-1 / 4)			679 (26-23 / 32)		
	Width	mm (in.)	1219 (48)			1291 (50-13 / 16)		
	Depth	mm (in.)	229 (9-1 / 32)			312 (12-9 / 32)		
Net weight		kg (lbs.)	28 (62)					
Shipping weight		kg (lbs.)	31 (68)					
Shipping volume		m^3 (cu.ft)	0.273 (9.6)					

DATA SUBJECT TO CHANGE WITHOUT NOTICE.

Rated conditions

Cooling: Indoor air temperature 27°C DB / 19°C WB; Outdoor air temperature 35°C DB

Heating: Indoor air temperature 20°C DB; Outdoor air temperature 7°C DB / 6°C WB

15. Concealed Floor Standing Type (R1 Type)

15-2. Major Component Specifications

Indoor unit (A)

MODEL No.			S-22MR1E5
Power source			220 - 230 - 240 V, single-phase, 50/60 Hz
Controller P.C.B. Ass'y			CR-UXRP71B-P (Microprocessor)
Fan (Number...diameter)		mm	Centrifugal (1...ø153)
Fan motor			
	Model...Nominal output	W	KFT6Q-11A3P...10 W
	Power source		220 - 230 - 240 V / single-phase / 50 Hz
	No. of pole...r.p.m. (230V, High)	rpm	6P... 831
	Coil resistance (Ambient temperature 20°C)	Ω	BRN – WHT : 370.2 WHT – VLT : 105.4 VLT – ORG : 67.05 ORG – YEL : 168.0 YEL – PNK : 92.16
	Safety device		
	Operating temperature	Open °C	130 ± 5
		Close °C	(115 ± 5)
	Run capacitor	VAC, μF	440 VAC, 1.0 μF
Electronic expansion valve			
	Coil		UKV-U030E
	Coil resistance (at 20°C)	Ω	ORG – GRY : 46 RED – GRY : 46 YEL – GRY : 46 BLK – GRY : 46
	Valve body		UKV-18D31
Heat exchanger			
	Coil		Aluminium plate fin / Copper tube
	Rows...fin pitch	mm	3...2.0
	Face area	m^2	0.102

4

15. Concealed Floor Standing Type (R1 Type)

Indoor unit (B)

MODEL No.			**S-28MR1E5**
Power source			220 - 230 - 240 V, single-phase, 50/60 Hz
Controller P.C.B. Ass'y			CR-UXRP71B-P (Microprocessor)
Fan (Number...diameter)		mm	Centrifugal (1...ø153)
Fan motor			
	Model...Nominal output	W	KFT6Q-11A3P...10 W
	Power source		220 - 230 - 240 V / single-phase / 50 Hz
	No. of pole...r.p.m. (230V, High)	rpm	6P... 831
	Coil resistance (Ambient temperature 20°C)	Ω	BRN – WHT : 370.2 WHT – VLT : 105.4 VLT – ORG : 67.05 ORG – YEL : 168.0 YEL – PNK : 92.16
	Safety device		
	Operating temperature	Open °C	130 ± 5
		Close °C	(115 ± 5)
	Run capacitor	VAC, μF	440 VAC, 1.0 μF
Electronic expansion valve			
	Coil		UKV-U030E
	Coil resistance (at 20°C)	Ω	ORG – GRY : 46 RED – GRY : 46 YEL – GRY : 46 BLK – GRY : 46
	Valve body		UKV-18D31
Heat exchanger			
	Coil		Aluminium plate fin / Copper tube
	Rows...fin pitch	mm	3...2.0
	Face area	m^2	0.102

4

15. Concealed Floor Standing Type (R1 Type)

Indoor unit (C)

MODEL No.			S-36MR1E5
Power source			220 - 230 - 240 V, single-phase, 50/60 Hz
Controller P.C.B. Ass'y			CR-UXRP71B-P (Microprocessor)
Fan (Number...diameter)		mm	Centrifugal (1...ø153)
Fan motor			
	Model...Nominal output	W	KFT4Q-21B3P...20 W
	Power source		220 - 230 - 240 V / single-phase / 50 Hz
	No. of pole...r.p.m. (230V, High)	rpm	4P... 1,102
	Coil resistance (Ambient temperature 20°C)	Ω	BRN – WHT : 217.7 WHT – VLT : 37.33 VLT – ORG : 22.48 ORG – YEL : 37.88 YEL – PNK : 21.82
	Safety device		
	Operating temperature	Open °C	130 ± 5
		Close °C	(115 ± 5)
	Run capacitor	VAC, μF	440 VAC, 2.0 μF
Electronic expansion valve			
	Coil		UKV-U030E
	Coil resistance (at 20°C)	Ω	ORG – GRY : 46 RED – GRY : 46 YEL – GRY : 46 BLK – GRY : 46
	Valve body		UKV-18D31
Heat exchanger			
	Coil		Aluminium plate fin / Copper tube
	Rows...fin pitch	mm	3...2.0
	Face area	m^2	0.102

4

15. Concealed Floor Standing Type (R1 Type)

Indoor unit (D)

MODEL No.			**S-45MR1E5**
Power source			220 - 230 - 240 V, single-phase, 50/60 Hz
Controller P.C.B. Ass'y			CR-UXRP71B-P (Microprocessor)
Fan (Number...diameter)		mm	Centrifugal (2...ø153)
Fan motor			
	Model...Nominal output	W	KFG4Q-61C3P...20 W
	Power source		220 - 230 - 240 V / single-phase / 50 Hz
	No. of pole...r.p.m. (230V, High)	rpm	4P... 1,066
	Coil resistance (Ambient temperature 20°C)	Ω	BRN – WHT : 67.62 WHT – VLT : 18.47 VLT – ORG : 10.10 ORG – YEL : 17.36 YEL – PNK : 5.18
	Safety device		
	Operating temperature	Open °C	130 ± 5
		Close °C	(115 ± 5)
	Run capacitor	VAC, μF	440 VAC, 2.0 μF
Electronic expansion valve			
	Coil		UKV-U030E
	Coil resistance (at 20°C)	Ω	ORG – GRY : 46 RED – GRY : 46 YEL – GRY : 46 BLK – GRY : 46
	Valve body		UKV-25D32
Heat exchanger			
	Coil		Aluminium plate fin / Copper tube
	Rows...fin pitch	mm	3...2.0
	Face area	m^2	0.165

4

15. Concealed Floor Standing Type (R1 Type)

Indoor unit (E)

MODEL No.			**S-56MR1E5**
Power source			220 - 230 - 240 V, single-phase, 50/60 Hz
Controller P.C.B. Ass'y			CR-UXRP71B-P (Microprocessor)
Fan (Number...diameter)		mm	Centrifugal (2...ø153)
Fan motor			
	Model...Nominal output	W	KFG4Q-61C3P...30 W
	Power source		220 - 230 - 240 V / single-phase / 50 Hz
	No. of pole...r.p.m. (230V, High)	rpm	4P... 1,066
	Coil resistance (Ambient temperature 20°C)	Ω	BRN – WHT : 67.62 WHT – VLT : 18.47 VLT – ORG : 10.10 ORG – YEL : 17.36 YEL – PNK : 5.18
	Safety device		
	Operating temperature	Open °C	130 ± 5
		Close °C	(115 ± 5)
	Run capacitor	VAC, μF	440 VAC, 2.0 μF
Electronic expansion valve			
	Coil		UKV-U030E
	Coil resistance (at 20°C)	Ω	ORG – GRY : 46 RED – GRY : 46 YEL – GRY : 46 BLK – GRY : 46
	Valve body		UKV-25D32
Heat exchanger			
	Coil		Aluminium plate fin / Copper tube
	Rows...fin pitch	mm	3...2.0
	Face area	m^2	0.165

4

15. Concealed Floor Standing Type (R1 Type)

Indoor unit (F)

MODEL No.			**S-71MR1E5**
Power source			220 - 230 - 240 V, single-phase, 50/60 Hz
Controller P.C.B. Ass'y			CR-UXRP71B-P (Microprocessor)
Fan (Number...diameter)		mm	Centrifugal (2...ø153)
Fan motor			
	Model...Nominal output	W	KFG4Q-61C3P...60 W
	Power source		220 - 230 - 240 V / single-phase / 50 Hz
	No. of pole...r.p.m. (230V, High)	rpm	4P... 1,066
	Coil resistance (Ambient temperature 20°C)	Ω	BRN – WHT : 67.62 WHT – VLT : 18.47 VLT – ORG : 10.10 ORG – YEL : 17.36 YEL – PNK : 5.18
	Safety device		
	Operating temperature	Open °C	130 ± 5
		Close °C	(115 ± 5)
	Run capacitor	VAC, μF	440 VAC, 3.5 μF
Electronic expansion valve			
	Coil		UKV-U030E
	Coil resistance (at 20°C)	Ω	ORG – GRY : 46 RED – GRY : 46 YEL – GRY : 46 BLK – GRY : 46
	Valve body		UKV-25D32
Heat exchanger			
	Coil		Aluminium plate fin / Copper tube
	Rows...fin pitch	mm	3...2.0
	Face area	m^2	0.165

4

15. Concealed Floor Standing Type (R1 Type)

15-3. Dimensional Data

Indoor unit: S-22MR1E5 / 28MR1E5 / 36MR1E5 / 45MR1E5 / 56MR1E5 / 71MR1E5

unit: mm

Indoor unit	A	B	C	D	E	F	Liquid tube	Gas tube
S-22MR1E5 / 28MR1E5 / 36ME1E5	904	692	672	665	500	86	ø6.35	ø12.7
S-45MR1E5	1219	1007	1002	980	900	51		
S-56MR1E5								
S-71MR1E5							ø9.52	ø15.88

Unit: mm

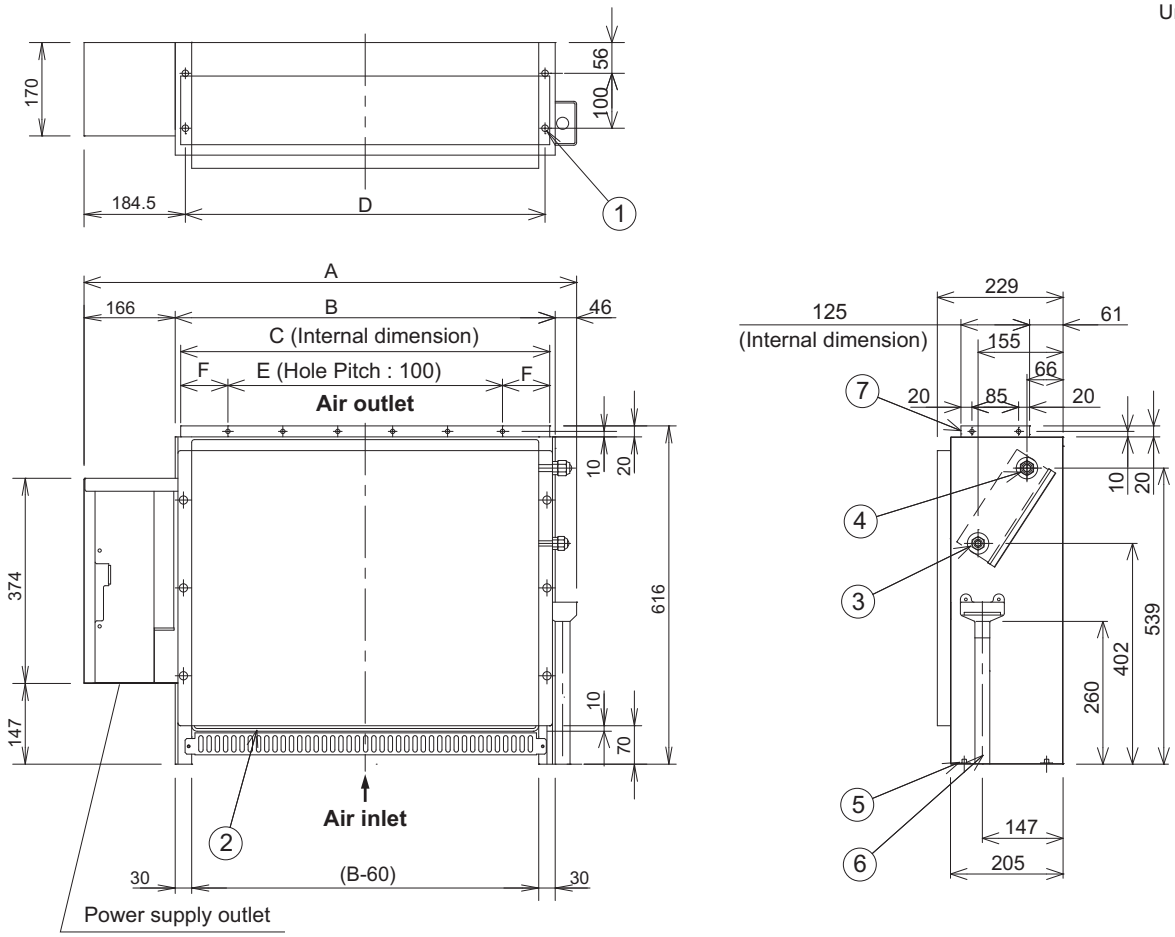

① 4-ø12 hole (For fastening the indoor unit to the floor with screws.)
② Air filter
③ Refrigerant connection outlet (liquid tube)
④ Refrigerant connection outlet (gas tube)
⑤ Level adjusting bolt
⑥ Drain outlet (20 A)
⑦ Flange for the air-outlet duct

NOTE

Make an opening in the housing of the unit so that maintenance service can be peformed on the electric component box, air filter, refrigerant tubing connection, and drain pipe.

15. Concealed Floor Standing Type (R1 Type)

15-4. Noise Criterion Curves

MODEL	: S-22MR1E5/28MR1E5
SOUND LEVEL	: HIGH 33 dB(A), NC 27
	LOW 28 dB(A), NC 23
CONDITION	In front of the unit 1 m, HEIGHT 1 m
SOURCE	: 220 - 230- 240 V, Single-phase, 50/60 Hz

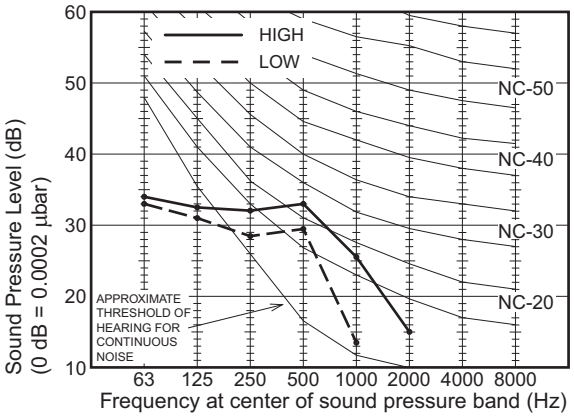

MODEL	: S-36MR1E5
SOUND LEVEL	: HIGH 39 dB(A), NC 33
	LOW 29 dB(A), NC 23
CONDITION	: In front of the unit 1 m, HEIGHT 1 m
SOURCE	: 220 - 230- 240 V, Single-phase, 50/60 Hz

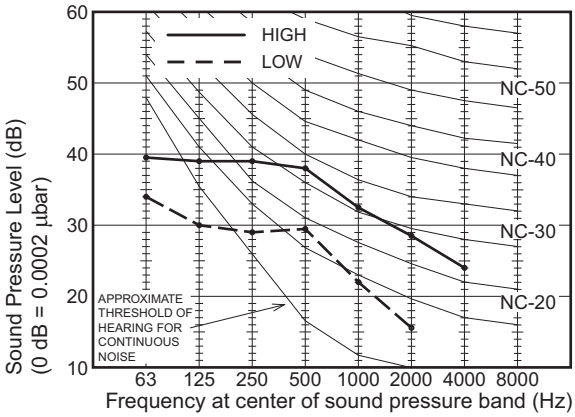

MODEL	: S-45MR1E5
SOUND LEVEL	: HIGH 38 dB(A),
	LOW 31 dB(A),
CONDITION	In front of the unit 1 m, HEIGHT 1 m
SOURCE	: 220 - 230- 240 V, Single-phase, 50/60 Hz

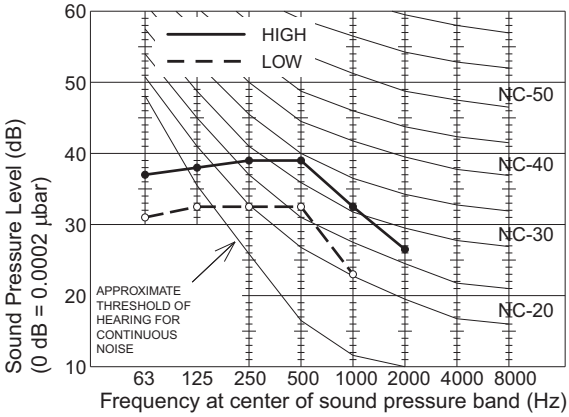

MODEL	: S-56MR1E5
SOUND LEVEL	: HIGH 39 dB(A), NC 34
	LOW 31 dB(A), NC 26
CONDITION	: In front of the unit 1 m, HEIGHT 1 m
SOURCE	: 220 - 230- 240 V, Single-phase, 50/60 Hz

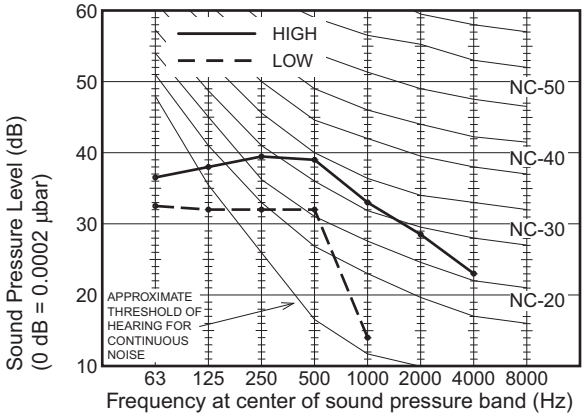

MODEL	: S-71MR1E5
SOUND LEVEL	: HIGH 41 dB(A), NC 37
	LOW 35 dB(A), NC 30
CONDITION	: In front of the unit 1 m, HEIGHT 1 m
SOURCE	: 220 - 230- 240 V, Single-phase, 50/60 Hz

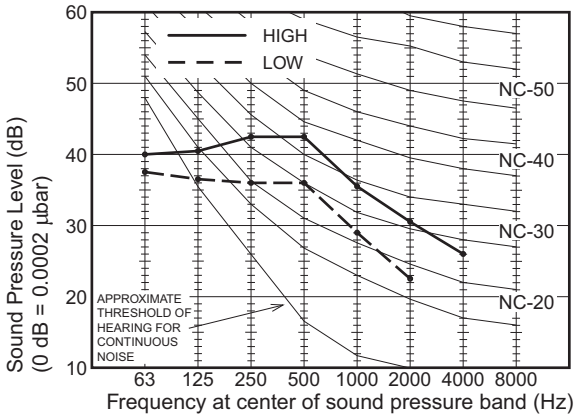

15. Concealed Floor Standing Type (R1 Type)

15-5. Air Flow Distance Chart

S-22MR1E5 / 28MR1E5

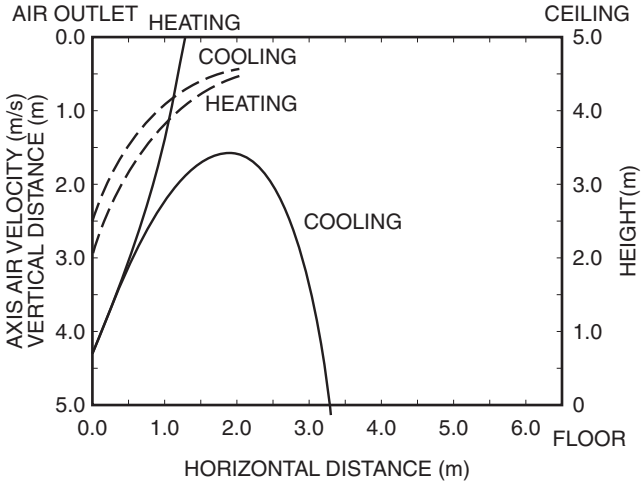

S-36MR1E5

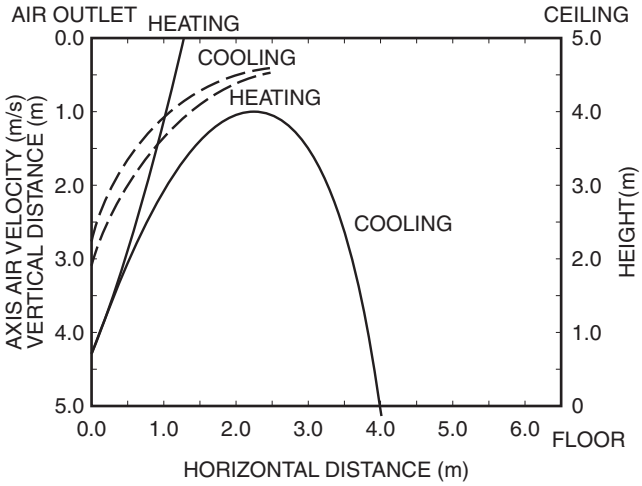

S-45MR1E5 / 56MR1E5

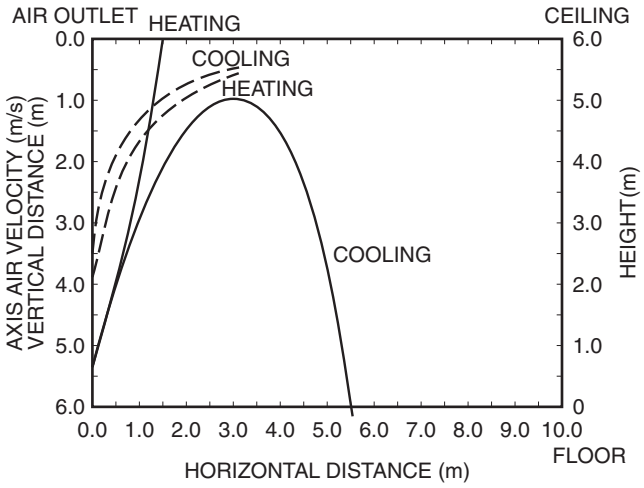

S-71MR1E5

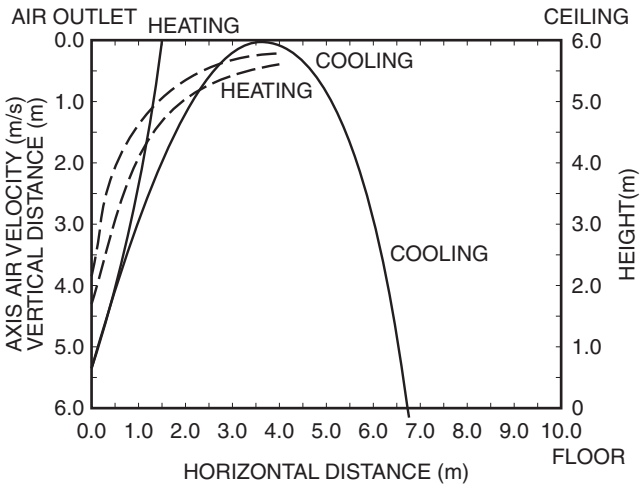

Air conditioner fan speed : Hi
Room air temp. : 27℃ DB in Cooling mode
20℃ DB in Heating mode

4

15. Concealed Floor Standing Type (R1 Type)

15-6. Indoor Fan Performance

How to Read the Diagram

The vertical axis is the EXTERNAL STATIC PRESSURE (mmAq) while the horizontal axis represents the AIR FLOW (m^3/minute). The characteristic curve for the “H”, “Med”, and “Lo” fan speed control.
The name plate values are shown based on the “H” air flow. Therefore in the case of the 71 type the flow is 17 m^3/minute, while the EXTERNAL STATIC PRESSURE is 1.5 mmAq at “H” position. If the external static pressure is too great (due to long extension of duct, for example), the air flow volume may drop too low at each air outlet.

S-22MR1E5 / 28MR1E5

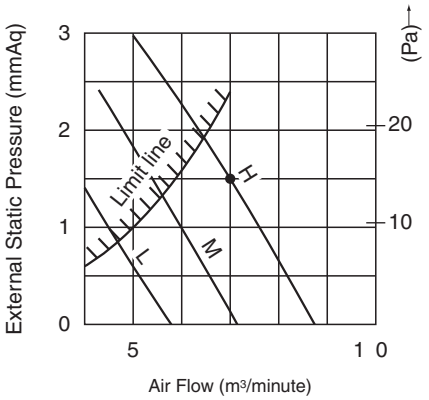

S-36MR1E5

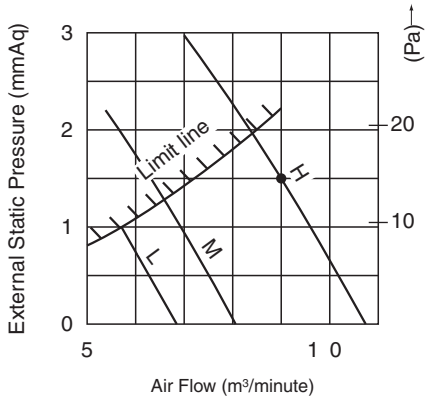

S-45MR1E5 / 56MR1E5

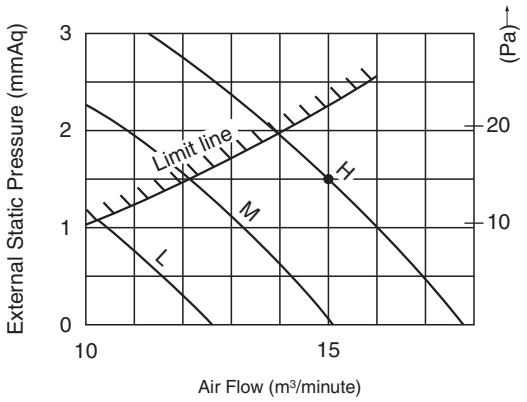

S-71MR1E5

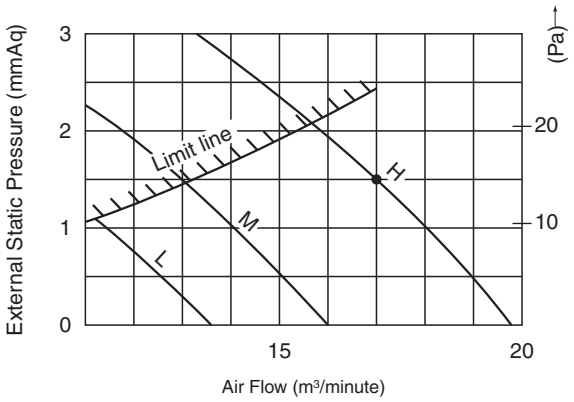

4

16. 1-Way Cassette Type (D1 Type)

16-1. Specifications

Unit specifications (A)

MODEL No.	Indoor Unit		S-28MD1E5					
POWER SOURCE			220 - 230 - 240 V, single-phase, 50/60 Hz					
PERFORMANCE			Cooling			Heating		
Capacity		kW	2.8			3.2		
		BTU / h	9,600			11,000		
Air circulation (Hi / Me / Lo)		m^3 / h	720 / 600 / 540					
Moisture removal (High)		Liters / h	0.6			–		
ELECTRICAL RATINGS								
Voltage rating		V	220	230	240	220	230	240
Available voltage range		V	198 - 264			198 - 264		
Running amperes		A	0.40	0.39	0.39	0.36	0.35	0.35
Power input		W	50	51	52	39	40	42
Power factor		%	57	57	56	49	50	50
Max. starting amperes		A	1	1	1	1	1	1
FEATURES								
Controls			Microprocessor					
Timer			ON / OFF Timer (Max. 72 h)					
Fan speeds			3 and Automatic control					
Air flow direction			Automatic (Remote control)					
Air filter			Washable, easy access, long life (2,500 h)					
Refrigerant control			Electronic expansion valve					
Operation sound (Hi / Me / Lo)		dB-A	36 / 34 / 33					
Refrigerant tubing connections			Flare type					
Refrigerant tube diameter	Liquid tube	mm (in.)	6.35 (1 / 4)					
	Gas tube	mm (in.)	12.7 (1 / 2)					
Drain connection			25 A, OD32 mm					
Drain pump			Max. head 700 mm above drain connection					
Panel			Optional (CZ-KPD2)					
Remote controller			Optional (Wired / Wireless)					
Refrigerant tubing kit / Accessories			Optional / Accessory cable					
Color (Approximate value)			Munsell 2.5GY 9.0 / 0.5, RAL 9001-GL (resemblant color)					
DIMENSIONS & WEIGHT			Indoor unit (including panel)			Package		
						Body	Panel	
Unit dimensions	Height	mm (in.)	220 (8-21 / 32)			235 (9-1 / 4)	130 (5-1 / 8)	
	Width	mm (in.)	1230 (48-7 / 16)			1270 (50)	1260 (49-39 / 64)	
	Depth	mm (in.)	800 (31-1 / 2)			790 (31-3 / 32)	875 (34-7 / 16)	
Net weight		kg (lbs.)	21 + 5.5 (46 + 12)			–	–	
Shipping weight		kg (lbs.)	–			23.5 (52)	7.5 (17)	
Shipping volume		m^3 (cu.ft)	–			0.236 (8.3)	0.143 (5.1)	

DATA SUBJECT TO CHANGE WITHOUT NOTICE.

Rated conditions

Cooling: Indoor air temperature 27°C DB / 19°C WB; Outdoor air temperature 35°C DB

Heating: Indoor air temperature 20°C DB; Outdoor air temperature 7°C DB / 6°C WB

16. 1-Way Cassette Type (D1 Type)

Unit specifications (B)

MODEL No.	Indoor Unit		S-36MD1E5					
POWER SOURCE			220 - 230 - 240 V, single-phase, 50/60 Hz					
PERFORMANCE			Cooling			Heating		
Capacity		kW	3.6			4.2		
		BTU / h	12,000			14,000		
Air circulation (Hi / Me / Lo)		m^3 / h	720 / 600 / 540					
Moisture removal (High)		Liters / h	1.3			–		
ELECTRICAL RATINGS								
Voltage rating		V	220	230	240	220	230	240
Available voltage range		V	198 - 264			198 - 264		
Running amperes		A	0.40	0.39	0.39	0.36	0.35	0.35
Power input		W	50	51	52	39	40	42
Power factor		%	57	57	56	49	50	50
Max. starting amperes		A	1	1	1	1	1	1
FEATURES								
Controls			Microprocessor					
Timer			ON / OFF Timer (Max. 72 h)					
Fan speeds			3 and Automatic control					
Air flow direction			Automatic (Remote control)					
Air filter			Washable, easy access, long life (2,500 h)					
Refrigerant control			Electronic expansion valve					
Operation sound (Hi / Me / Lo)		dB-A	36 / 34 / 33					
Refrigerant tubing connections			Flare type					
Refrigerant tube diameter	Liquid tube	mm (in.)	6.35 (1 / 4)					
	Gas tube	mm (in.)	12.7 (1 / 2)					
Drain connection			25 A, OD32 mm					
Drain pump			Max. head 700 mm above drain connection					
Panel			Optional (CZ-KPD2)					
Remote controller			Optional (Wired / Wireless)					
Refrigerant tubing kit / Accessories			Optional / Accessory cable					
Color (Approximate value)			Munsell 2.5GY 9.0 / 0.5, RAL 9001-GL (resemblant color)					
DIMENSIONS & WEIGHT			Indoor unit (including panel)			Package		
						Body	Panel	
Unit dimensions	Height	mm (in.)	220 (8-21 / 32)			235 (9-1 / 4)	130 (5-1 / 8)	
	Width	mm (in.)	1230 (48-7 / 16)			1270 (50)	1260 (49-39 / 64)	
	Depth	mm (in.)	800 (31-1 / 2)			790 (31-3 / 32)	875 (34-7 / 16)	
Net weight		kg (lbs.)	21 + 5.5 (46 + 12)			–	–	
Shipping weight		kg (lbs.)	–			23.5 (52)	7.5 (17)	
Shipping volume		m^3 (cu.ft)	–			0.236 (8.3)	0.143 (5.1)	

DATA SUBJECT TO CHANGE WITHOUT NOTICE.

Rated conditions

Cooling: Indoor air temperature 27°C DB / 19°C WB; Outdoor air temperature 35°C DB

Heating: Indoor air temperature 20°C DB; Outdoor air temperature 7°C DB / 6°C WB

16. 1-Way Cassette Type (D1 Type)

Unit specifications (C)

MODEL No.	Indoor Unit		S-45MD1E5					
POWER SOURCE			220 - 230 - 240 V, single-phase, 50/60 Hz					
PERFORMANCE			Cooling			Heating		
Capacity		kW	4.5			5.0		
		BTU / h	15,000			17,000		
Air circulation (Hi / Me / Lo)		m^3 / h	720 / 660 / 600					
Moisture removal (High)		Liters / h	1.3			–		
ELECTRICAL RATINGS								
Voltage rating		V	220	230	240	220	230	240
Available voltage range		V	198 - 264			198 - 264		
Running amperes		A	0.40	0.39	0.39	0.36	0.35	0.35
Power input		W	50	51	52	39	40	42
Power factor		%	57	57	56	49	50	50
Max. starting amperes		A	1	1	1	1	1	1
FEATURES								
Controls			Microprocessor					
Timer			ON / OFF Timer (Max. 72 h)					
Fan speeds			3 and Automatic control					
Air flow direction			Automatic (Remote control)					
Air filter			Washable, easy access, long life (2,500 h)					
Refrigerant control			Electronic expansion valve					
Operation sound (Hi / Me / Lo)		dB-A	36 / 35 / 34					
Refrigerant tubing connections			Flare type					
Refrigerant tube diameter	Liquid tube	mm (in.)	6.35 (1 / 4)					
	Gas tube	mm (in.)	12.7 (1 / 2)					
Drain connection			25 A, OD32 mm					
Drain pump			Max. head 700 mm above drain connection					
Panel			Optional (CZ-KPD2)					
Remote controller			Optional (Wired / Wireless)					
Refrigerant tubing kit / Accessories			Optional / Accessory cable					
Color (Approximate value)			Munsell 2.5GY 9.0 / 0.5, RAL 9001-GL (resemblant color)					
DIMENSIONS & WEIGHT			Indoor unit (including panel)			Package		
						Body	Panel	
Unit dimensions	Height	mm (in.)	220 (8-21 / 32)			235 (9-1 / 4)	130 (5-1 / 8)	
	Width	mm (in.)	1230 (48-7 / 16)			1270 (50)	1260 (49-39 / 64)	
	Depth	mm (in.)	800 (31-1 / 2)			790 (31-3 / 32)	875 (34-7 / 16)	
Net weight		kg (lbs.)	21 + 5.5 (46 + 12)			–	–	
Shipping weight		kg (lbs.)	–			23.5 (52)	7.5 (17)	
Shipping volume		m^3 (cu.ft)	–			0.236 (8.3)	0.143 (5.1)	

DATA SUBJECT TO CHANGE WITHOUT NOTICE.

Rated conditions

Cooling: Indoor air temperature 27°C DB / 19°C WB; Outdoor air temperature 35°C DB

Heating: Indoor air temperature 20°C DB; Outdoor air temperature 7°C DB / 6°C WB

16. 1-Way Cassette Type (D1 Type)

Unit specifications (D)

MODEL No.	Indoor Unit		S-56MD1E5					
POWER SOURCE			220 - 230 - 240 V, single-phase, 50/60 Hz					
PERFORMANCE			Cooling			Heating		
Capacity		kW	5.6			6.3		
		BTU / h	19,000			21,000		
Air circulation (Hi / Me / Lo)		m^3 / h	780 / 690 / 600					
Moisture removal (High)		Liters / h	2.5			–		
ELECTRICAL RATINGS								
Voltage rating		V	220	230	240	220	230	240
Available voltage range		V	198 - 264			198 - 264		
Running amperes		A	0.46	0.46	0.46	0.42	0.41	0.41
Power input		W	58	60	61	46	48	49
Power factor		%	57	57	55	50	51	50
Max. starting amperes		A	1	1	1	1	1	1
FEATURES								
Controls			Microprocessor					
Timer			ON / OFF Timer (Max. 72 h)					
Fan speeds			3 and Automatic control					
Air flow direction			Automatic (Remote control)					
Air filter			Washable, easy access, long life (2,500 h)					
Refrigerant control			Electronic expansion valve					
Operation sound (Hi / Me / Lo)		dB-A	38 / 36 / 34					
Refrigerant tubing connections			Flare type					
Refrigerant tube diameter	Liquid tube	mm (in.)	6.35 (1 / 4)					
	Gas tube	mm (in.)	12.7 (1 / 2)					
Drain connection			25 A, OD32 mm					
Drain pump			Max. head 700 mm above drain connection					
Panel			Optional (CZ-KPD2)					
Remote controller			Optional (Wired / Wireless)					
Refrigerant tubing kit / Accessories			Optional / Accessory cable					
Color (Approximate value)			Munsell 2.5GY 9.0 / 0.5, RAL 9001-GL (resemblant color)					
DIMENSIONS & WEIGHT			Indoor unit (including panel)			Package		
						Body	Panel	
Unit dimensions	Height	mm (in.)	220 (8-21 / 32)			235 (9-1 / 4)	130 (5-1 / 8)	
	Width	mm (in.)	1230 (48-7 / 16)			1270 (50)	1260 (49-39 / 64)	
	Depth	mm (in.)	800 (31-1 / 2)			790 (31-3 / 32)	875 (34-7 / 16)	
Net weight		kg (lbs.)	21 + 5.5 (46 + 12)			–	–	
Shipping weight		kg (lbs.)	–			23.5 (52)	7.5 (17)	
Shipping volume		m^3 (cu.ft)	–			0.236 (8.3)	0.143 (5.1)	

DATA SUBJECT TO CHANGE WITHOUT NOTICE.

Rated conditions

Cooling: Indoor air temperature 27°C DB / 19°C WB; Outdoor air temperature 35°C DB

Heating: Indoor air temperature 20°C DB; Outdoor air temperature 7°C DB / 6°C WB

16. 1-Way Cassette Type (D1 Type)

Unit specifications (E)

MODEL No.	Indoor Unit		S-73MD1E5					
POWER SOURCE			220 - 230 - 240 V, single-phase, 50/60 Hz					
PERFORMANCE			Cooling			Heating		
Capacity		kW	7.3			8.0		
		BTU / h	25,000			27,000		
Air circulation (Hi / Me / Lo)		m^3 / h	1,080 / 900 / 780					
Moisture removal (High)		Liters / h	3.3			–		
ELECTRICAL RATINGS								
Voltage rating		V	220	230	240	220	230	240
Available voltage range		V	198 - 264			198 - 264		
Running amperes		A	0.71	0.70	0.69	0.66	0.65	0.63
Power input		W	86	87	89	75	76	77
Power factor		%	55	54	54	52	51	51
Max. starting amperes		A	1	1	1	1	1	1
FEATURES								
Controls			Microprocessor					
Timer			ON / OFF Timer (Max. 72 h)					
Fan speeds			3 and Automatic control					
Air flow direction			Automatic (Remote control)					
Air filter			Washable, easy access, long life (2,500 h)					
Refrigerant control			Electronic expansion valve					
Operation sound (Hi / Me / Lo)		dB-A	45 / 40 / 36					
Refrigerant tubing connections			Flare type					
Refrigerant tube diameter	Liquid tube	mm (in.)	9.52 (3 / 8)					
	Gas tube	mm (in.)	15.88 (5 / 8)					
Drain connection			25 A, OD32 mm					
Drain pump			Max. head 700 mm above drain connection					
Panel			Optional (CZ-KPD2)					
Remote controller			Optional (Wired / Wireless)					
Refrigerant tubing kit / Accessories			Optional / Accessory cable					
Color (Approximate value)			Munsell 2.5GY 9.0 / 0.5, RAL 9001-GL (resemblant color)					
DIMENSIONS & WEIGHT			Indoor unit (including panel)			Package		
						Body	Panel	
Unit dimensions	Height	mm (in.)	220 (8-21 / 32)			235 (9-1 / 4)	130 (5-1 / 8)	
	Width	mm (in.)	1230 (48-7 / 16)			1270 (50)	1260 (49-39 / 64)	
	Depth	mm (in.)	800 (31-1 / 2)			790 (31-3 / 32)	875 (34-7 / 16)	
Net weight		kg (lbs.)	22 + 5.5 (49 + 12)			–	–	
Shipping weight		kg (lbs.)	–			24.5 (54)	7.5 (17)	
Shipping volume		m^3 (cu.ft)	–			0.236 (8.3)	0.143 (5.1)	

DATA SUBJECT TO CHANGE WITHOUT NOTICE.

Rated conditions

Cooling: Indoor air temperature 27°C DB / 19°C WB; Outdoor air temperature 35°C DB

Heating: Indoor air temperature 20°C DB; Outdoor air temperature 7°C DB / 6°C WB

16. 1-Way Cassette Type (D1 Type)

16-2. Major Component Specifications
Indoor unit (B)

MODEL No.			**S-36MD1E5**
Power source			220 - 230 - 240 V, single-phase, 50/60 Hz
Controller P.C.B. Ass'y			CR-SXRP56B-B (Microprocessor)
Fan (Number...diameter)		mm	Centrifugal (2...ø140)
Fan motor			
	Model...Nominal output	W	DK8-63C280H...50 W
	Power source		340 VDC
	No. of pole...r.p.m. (230V, High)	rpm	8P...1,010
	Coil resistance (Ambient temperature 20°C)	Ω	RED – WHT : 53.0 WHT – BLU : 53.0 BLU – RED : 53.0
	Safety device		overcurrent, rotating signal detection, fuse
	Run capacitor	VAC, μF	–
Electronic expansion valve			
	Coil		UKV-U030E
	Coil resistance (at 20°C)	Ω	ORG – GRY : 46 YEL – GRY : 46 RED – GRY : 46 BLK – GRY : 46
	Valve body		UKV-18D31
Heat exchanger			
	Coil		Aluminium plate fin / Copper tube
	Rows...fin pitch	mm	3...1.4
	Face area	m^2	0.154
Panel			
	Model No.		CZ-KPD2
	Auto louver motor		MP24GA1
	Coil resistance (at 25°C)	Ω	380 Ω ± 7%
Drain pump			ADP-1414
	Rated	V, W	AC 230 V, 50/60 Hz, 12/11 W
	Total head & capacity		700 mm, 400 cc/min

4

16. 1-Way Cassette Type (D1 Type)

Indoor unit (C)

MODEL No.			**S-45MD1E5**
Power source			220 - 230 - 240 V, single-phase, 50/60 Hz
Controller P.C.B. Ass'y			CR-SXRP56B-B (Microprocessor)
Fan (Number...diameter)		mm	Centrifugal (2...ø140)
Fan motor			
	Model...Nominal output	W	DK8-63C280H...50 W
	Power source		340 VDC
	No. of pole...r.p.m. (230V, High)	rpm	8P...1,010
	Coil resistance (Ambient temperature 20°C)	Ω	RED – WHT : 53.0 WHT – BLU : 53.0 BLU – RED : 53.0
	Safety device		overcurrent, rotating signal detection, fuse
	Run capacitor	VAC, μF	–
Electronic expansion valve			
	Coil		UKV-U030E
	Coil resistance (at 20°C)	Ω	ORG – GRY : 46 YEL – GRY : 46 RED – GRY : 46 BLK – GRY : 46
	Valve body		UKV-25D32
Heat exchanger			
	Coil		Aluminium plate fin / Copper tube
	Rows...fin pitch	mm	3...1.4
	Face area	m^2	0.154
Panel			
	Model No.		CZ-KPD2
	Auto louver motor		MP24GA1
	Coil resistance (at 25°C)	Ω	380 Ω ± 7%
Drain pump			ADP-1414
	Rated	V, W	AC 230 V, 50/60 Hz, 12/11 W
	Total head & capacity		700 mm, 400 cc/min

16. 1-Way Cassette Type (D1 Type)

Indoor unit (D)

MODEL No.			**S-56MD1E5**
Power source			220 - 230 - 240 V, single-phase, 50/60 Hz
Controller P.C.B. Ass'y			CR-SXRP56B-B (Microprocessor)
Fan (Number...diameter)		mm	Centrifugal (2...ø140)
Fan motor			
	Model...Nominal output	W	DK8-63C280H...50 W
	Power source		340 VDC
	No. of pole...r.p.m. (230V, High)	rpm	8P...1,010
	Coil resistance (Ambient temperature 20°C)	Ω	RED – WHT : 53.0 WHT – BLU : 53.0 BLU – RED : 53.0
	Safety device		overcurrent, rotating signal detection, fuse
	Run capacitor	VAC, μF	–
Electronic expansion valve			
	Coil		UKV-U030E
	Coil resistance (at 20°C)	Ω	ORG – GRY : 46 YEL – GRY : 46 RED – GRY : 46 BLK – GRY : 46
	Valve body		UKV-25D32
Heat exchanger			
	Coil		Aluminium plate fin / Copper tube
	Rows...fin pitch	mm	3...1.4
	Face area	m^2	0.154
Panel			
	Model No.		CZ-KPD2
	Auto louver motor		MP24GA1
	Coil resistance (at 25°C)	Ω	380 Ω ± 7%
Drain pump			ADP-1414
	Rated	V, W	AC 230 V, 50/60 Hz, 12/11 W
	Total head & capacity		700 mm, 400 cc/min

4

16. 1-Way Cassette Type (D1 Type)

Indoor unit (E)

MODEL No.			**S-73MD1E5**
Power source			220 - 230 - 240 V, single-phase, 50/60 Hz
Controller P.C.B. Ass'y			CR-SXRP56B-B (Microprocessor)
Fan (Number...diameter)		mm	Centrifugal (2...ø140)
Fan motor			
	Model...Nominal output	W	DK8-63C280H...50 W
	Power source		340 VDC
	No. of pole...r.p.m. (230V, High)	rpm	8P...1,010
	Coil resistance (Ambient temperature 20°C)	Ω	RED – WHT : 53.0 WHT – BLU : 53.0 BLU – RED : 53.0
	Safety device		overcurrent, rotating signal detection, fuse
	Run capacitor	VAC, μF	–
Electronic expansion valve			
	Coil		UKV-U030E
	Coil resistance (at 20°C)	Ω	ORG – GRY : 46 YEL – GRY : 46 RED – GRY : 46 BLK – GRY : 46
	Valve body		UKV-25D32
Heat exchanger			
	Coil		Aluminium plate fin / Copper tube
	Rows...fin pitch	mm	3...1.4
	Face area	m^2	0.154
Panel			
	Model No.		CZ-KPD2
	Auto louver motor		MP24GA1
	Coil resistance (at 25°C)	Ω	380 Ω ± 7%
Drain pump			ADP-1414
	Rated	V, W	AC 230 V, 50/60 Hz, 12/11 W
	Total head & capacity		700 mm, 400 cc/min

16. 1-Way Cassette Type (D1 Type)

16-3. Dimensional Data

Indoor unit: S-28MD1E5 / 36MD1E5 / 45MD1E5 / 56MD1E5 / 73MD1E5

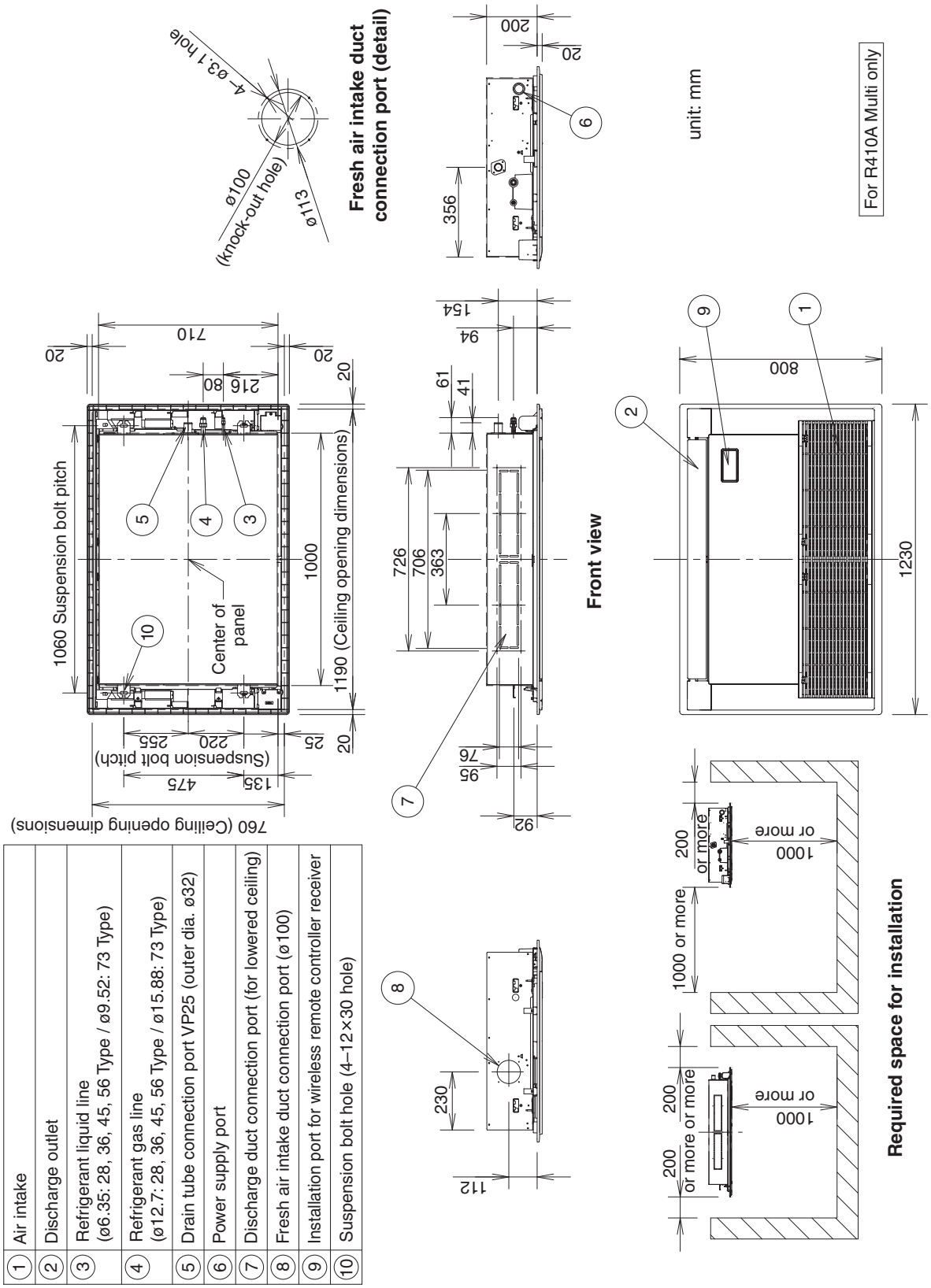

①	Air intake
②	Discharge outlet
③	Refrigerant liquid line (ø6.35: 28, 36, 45, 56 Type / ø9.52: 73 Type)
④	Refrigerant gas line (ø12.7: 28, 36, 45, 56 Type / ø15.88: 73 Type)
⑤	Drain tube connection port VP25 (outer dia. ø32)
⑥	Power supply port
⑦	Discharge duct connection port (for lowered ceiling)
⑧	Fresh air intake duct connection port (ø100)
⑨	Installation port for wireless remote controller receiver
⑩	Suspension bolt hole (4–12×30 hole)

16. 1-Way Cassette Type (D1 Type)

16-4. Noise Criterion Curves

MODEL : S-28MD1E5
-36MD1E5

SOUND LEVEL : HIGH 36 dB(A), NC 29 / LOW 33 dB(A), NC 25

CONDITION : Under the unit 1.5 m

SOURCE : 220 - 230 - 240 V, Single-phase, 50/60 Hz

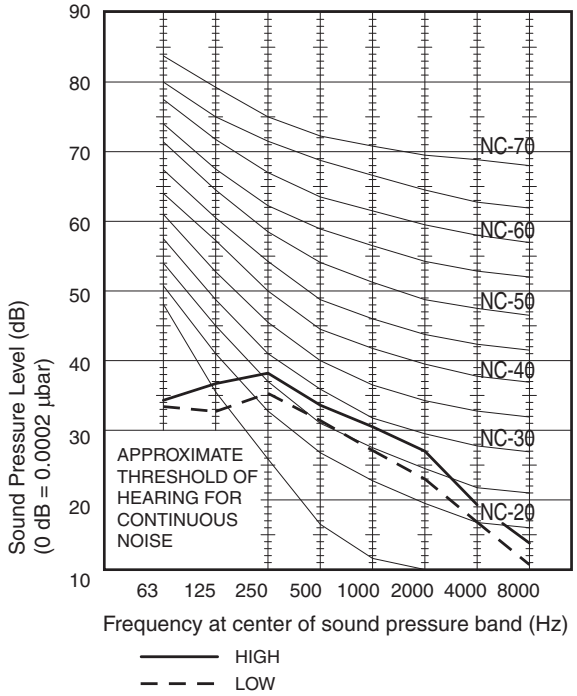

MODEL : S-45MD1E5

SOUND LEVEL : HIGH 36 dB(A), NC 29 / LOW 34 dB(A), NC 27

CONDITION : Under the unit 1.5 m

SOURCE : 220 - 230 - 240 V, Single-phase, 50/60 Hz

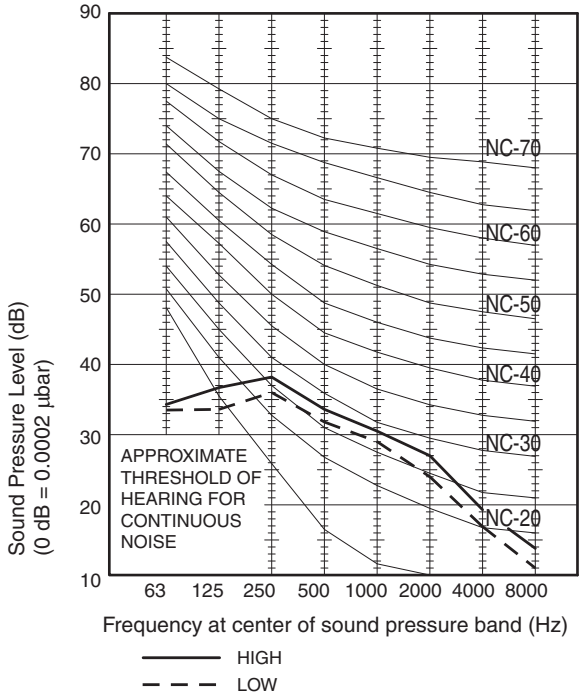

4

MODEL : S-56MD1E5

SOUND LEVEL : HIGH 38 dB(A), NC 31 / LOW 34 dB(A), NC 27

CONDITION : Under the unit 1.5 m

SOURCE : 220 - 230 - 240 V, Single-phase, 50/60 Hz

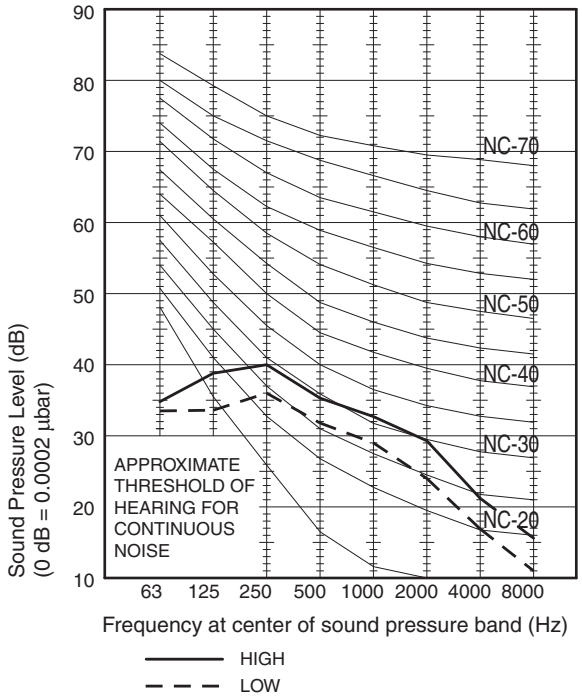

MODEL : S-73MD1E5

SOUND LEVEL : HIGH 45 dB(A), NC 38 / LOW 36 dB(A), NC 29

CONDITION : Under the unit 1.5 m

SOURCE : 220 - 230 - 240 V, Single-phase, 50/60 Hz

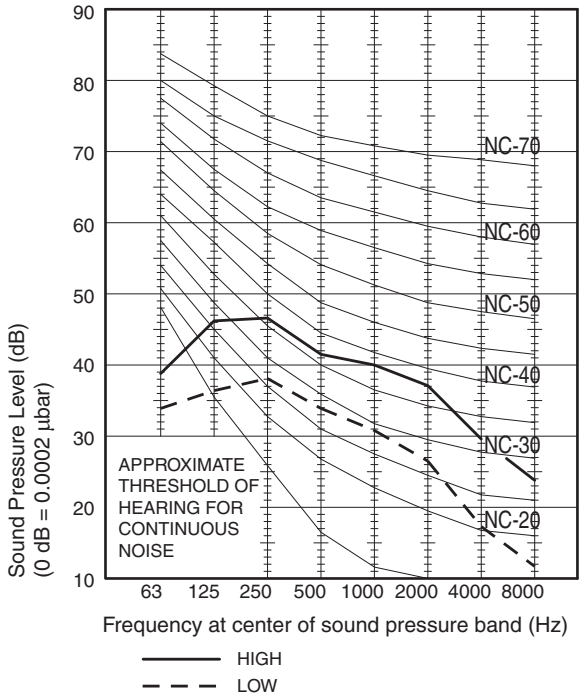

16. 1-Way Cassette Type (D1 Type)

16-5 Air Flow Distance Chart

S-28MD1E5, -36MD1E5, -45MD1E5

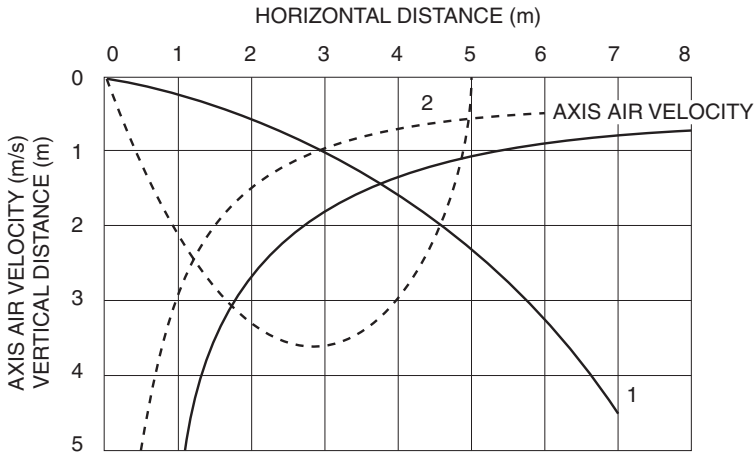

S-56MD1E5

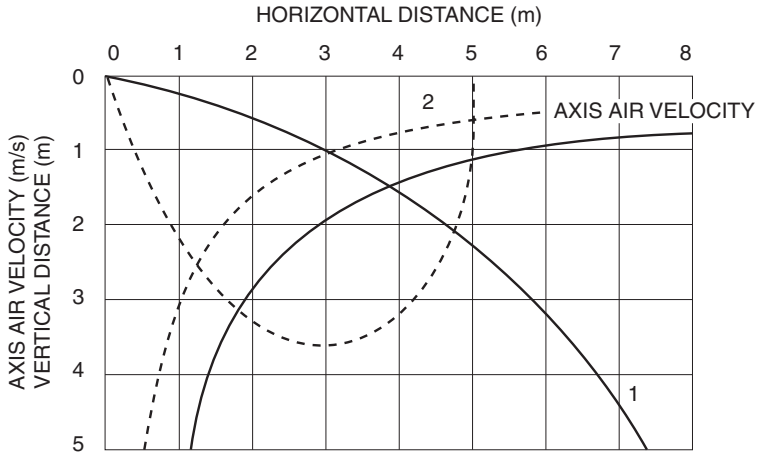

S-73MD1E5

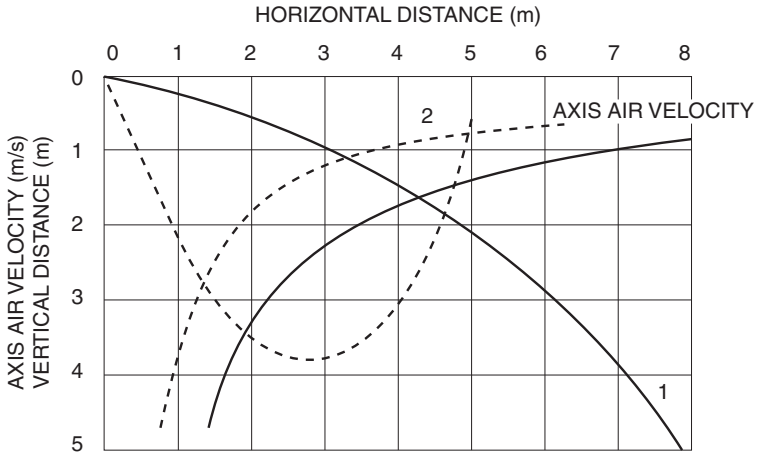

Condition Fan Speed : Hi
Room air temp. : 27°C DB in Cooling mode
20°C DB in Heating mode

1 : LOUVER ANGLE 15 in Cooling mode
2 : LOUVER ANGLE 65 in Heating mode

17. Slim Low Static Ducted Type (M1 Type)

17-1. Specifications

Unit specifications (A)

MODEL No.	Indoor Unit		S-15MM1E5					
POWER SOURCE			220 - 230 - 240 V, single-phase, 50/60 Hz					
PERFORMANCE			Cooling			Heating		
Capacity		kW	1.5			1.7		
		BTU / h	5,100			5,800		
Air circulation (Hi / Me / Lo)		m^3 / h	480 / 420 / 360					
Moisture removal (High)		Liters / h	0.2			–		
External static pressure (High)		Pa {mmAq}	10 {1.0}: At shipment 30 {3.1}: Using short circuit connection					
ELECTRICAL RATINGS								
Voltage rating		V	220	230	240	220	230	240
Available voltage range		V	198 - 264			198 - 264		
Running amperes		A	0.26	0.26	0.26	0.23	0.23	0.23
Power input		W	36	36	36	26	26	26
Power factor		%	63	60	58	51	49	47
Max. starting amperes		A	–	–	–	–	–	–
FEATURES								
Controls			Microprocessor					
Timer			ON / OFF Timer (Max. 72 h)					
Fan speeds			3 and Automatic control					
Air filter			Washable, easy access					
Refrigerant control			Electronic expansion valve					
Operation sound (Hi / Me / Lo)		dB-A	28 / 27 / 25					
Using short circuit connection (Hi / Me / Lo)		dB-A	30 / 29 / 27					
Refrigerant tubing connections			Flare type					
Refrigerant tube diameter	Liquid tube	mm (in.)	6.35 (1 / 4)					
	Gas tube	mm (in.)	12.7 (1 / 2)					
Drain connection			OD26 mm					
Drain pump			Max. head 500 mm above drain connection					
Remote controller			Optional (Wired / Wireless)					
Refrigerant tubing kit / Accessories			–					
Color (Approximate value)			–					
DIMENSIONS & WEIGHT			Unit dimensions			Package dimensions		
Unit dimensions	Height	mm (in.)	200 (7-7 / 8)			220 (8-21 / 32)		
	Width	mm (in.)	750 (29-17 / 32)			1030 (40-35 / 64)		
	Depth	mm (in.)	640 (25-13 / 64)			745 (29-21 / 64)		
Net weight		kg (lbs.)	19 (42)					
Shipping weight		kg (lbs.)	23 (51)					
Shipping volume		m^3 (cu.ft)	0.169 (5.97)					

DATA SUBJECT TO CHANGE WITHOUT NOTICE.

Rated conditions

Cooling: Indoor air temperature 27°C DB / 19°C WB; Outdoor air temperature 35°C DB

Heating: Indoor air temperature 20°C DB; Outdoor air temperature 7°C DB / 6°C WB

17. Slim Low Static Ducted Type (M1 Type)

Unit specifications (B)

MODEL No.	Indoor Unit		S-22MM1E5					
POWER SOURCE			220 - 230 - 240 V, single-phase, 50/60 Hz					
PERFORMANCE			Cooling			Heating		
Capacity		kW	2.2			2.5		
		BTU / h	7,500			8,500		
Air circulation (Hi / Me / Lo)		m^3 / h	480 / 420 / 360					
Moisture removal (High)		Liters / h	0.3			–		
External static pressure (High)		Pa {mmAq}	10 {1.0}: At shipment 30 {3.1}: Using short circuit connection					
ELECTRICAL RATINGS								
Voltage rating		V	220	230	240	220	230	240
Available voltage range		V	198 - 264			198 - 264		
Running amperes		A	0.26	0.26	0.26	0.23	0.23	0.23
Power input		W	36	36	36	26	26	26
Power factor		%	63	60	58	51	49	47
Max. starting amperes		A	–	–	–	–	–	–
FEATURES								
Controls			Microprocessor					
Timer			ON / OFF Timer (Max. 72 h)					
Fan speeds			3 and Automatic control					
Air filter			Washable, easy access					
Refrigerant control			Electronic expansion valve					
Operation sound (Hi / Me / Lo)		dB-A	28 / 27 / 25					
Using short circuit connection (Hi / Me / Lo)		dB-A	30 / 29 / 27					
Refrigerant tubing connections			Flare type					
Refrigerant tube diameter	Liquid tube	mm (in.)	6.35 (1 / 4)					
	Gas tube	mm (in.)	12.7 (1 / 2)					
Drain connection			OD26 mm					
Drain pump			Max. head 500 mm above drain connection					
Remote controller			Optional (Wired / Wireless)					
Refrigerant tubing kit / Accessories			–					
Color (Approximate value)			–					
DIMENSIONS & WEIGHT			Unit dimensions			Package dimensions		
Unit dimensions	Height	mm (in.)	200 (7-7 / 8)			220 (8-21 / 32)		
	Width	mm (in.)	750 (29-17 / 32)			1030 (40-35 / 64)		
	Depth	mm (in.)	640 (25-13 / 64)			745 (29-21 / 64)		
Net weight		kg (lbs.)	19 (42)					
Shipping weight		kg (lbs.)	23 (51)					
Shipping volume		m^3 (cu.ft)	0.169 (5.97)					

DATA SUBJECT TO CHANGE WITHOUT NOTICE.

Rated conditions

Cooling: Indoor air temperature 27°C DB / 19°C WB; Outdoor air temperature 35°C DB

Heating: Indoor air temperature 20°C DB; Outdoor air temperature 7°C DB / 6°C WB

17. Slim Low Static Ducted Type (M1 Type)

Unit specifications (C)

MODEL No.	Indoor Unit		S-28MM1E5					
POWER SOURCE			220 - 230 - 240 V, single-phase, 50/60 Hz					
PERFORMANCE			Cooling			Heating		
Capacity		kW	2.8			3.2		
		BTU / h	9,600			11,000		
Air circulation (Hi / Me / Lo)		m^3 / h	510 / 450 / 390					
Moisture removal (High)		Liters / h	0.7			–		
External static pressure (High)		Pa {mmAq}	15 {1.5}: At shipment 30 {3.1}: Using short circuit connection					
ELECTRICAL RATINGS								
Voltage rating		V	220	230	240	220	230	240
Available voltage range		V	198 - 264			198 - 264		
Running amperes		A	0.30	0.30	0.30	0.27	0.27	0.27
Power input		W	40	40	40	30	30	30
Power factor		%	61	58	56	51	48	46
Max. starting amperes		A	–	–	–	–	–	–
FEATURES								
Controls			Microprocessor					
Timer			ON / OFF Timer (Max. 72 h)					
Fan speeds			3 and Automatic control					
Air filter			Washable, easy access					
Refrigerant control			Electronic expansion valve					
Operation sound (Hi / Me / Lo)		dB-A	30 / 29 / 27					
Using short circuit connection (Hi / Me / Lo)		dB-A	32 / 31 / 29					
Refrigerant tubing connections			Flare type					
Refrigerant tube diameter	Liquid tube	mm (in.)	6.35 (1 / 4)					
	Gas tube	mm (in.)	12.7 (1 / 2)					
Drain connection			OD26 mm					
Drain pump			Max. head 500 mm above drain connection					
Remote controller			Optional (Wired / Wireless)					
Refrigerant tubing kit / Accessories			–					
Color (Approximate value)			–					
DIMENSIONS & WEIGHT			Unit dimensions			Package dimensions		
Unit dimensions	Height	mm (in.)	200 (7-7 / 8)			220 (8-21 / 32)		
	Width	mm (in.)	750 (29-17 / 32)			1030 (40-35 / 64)		
	Depth	mm (in.)	640 (25-13 / 64)			745 (29-21 / 64)		
Net weight		kg (lbs.)	19 (42)					
Shipping weight		kg (lbs.)	23 (51)					
Shipping volume		m^3 (cu.ft)	0.169 (5.97)					

DATA SUBJECT TO CHANGE WITHOUT NOTICE.

Rated conditions

Cooling: Indoor air temperature 27°C DB / 19°C WB; Outdoor air temperature 35°C DB

Heating: Indoor air temperature 20°C DB; Outdoor air temperature 7°C DB / 6°C WB

17. Slim Low Static Ducted Type (M1 Type)

Unit specifications (D)

MODEL No.	Indoor Unit		S-36MM1E5					
POWER SOURCE			220 - 230 - 240 V, single-phase, 50/60 Hz					
PERFORMANCE			Cooling			Heating		
Capacity		kW	3.6			4.2		
		BTU / h	12,000			14,000		
Air circulation (Hi / Me / Lo)		m^3 / h	540 / 480 / 420					
Moisture removal (High)		Liters / h	1.2			–		
External static pressure (High)		Pa {mmAq}	15 {1.5}: At shipment 40 {4.1}: Using short circuit connection					
ELECTRICAL RATINGS								
Voltage rating		V	220	230	240	220	230	240
Available voltage range		V	198 - 264			198 - 264		
Running amperes		A	0.31	0.31	0.31	0.28	0.28	0.28
Power input		W	42	42	42	32	32	32
Power factor		%	62	59	56	52	50	48
Max. starting amperes		A	–	–	–	–	–	–
FEATURES								
Controls			Microprocessor					
Timer			ON / OFF Timer (Max. 72 h)					
Fan speeds			3 and Automatic control					
Air filter			Washable, easy access					
Refrigerant control			Electronic expansion valve					
Operation sound (Hi / Me / Lo)		dB-A	32 / 30 / 28					
Using short circuit connection (Hi / Me / Lo)		dB-A	34 / 32 / 30					
Refrigerant tubing connections			Flare type					
Refrigerant tube diameter	Liquid tube	mm (in.)	6.35 (1 / 4)					
	Gas tube	mm (in.)	12.7 (1 / 2)					
Drain connection			OD26 mm					
Drain pump			Max. head 500 mm above drain connection					
Remote controller			Optional (Wired / Wireless)					
Refrigerant tubing kit / Accessories			–					
Color (Approximate value)			–					
DIMENSIONS & WEIGHT			Unit dimensions			Package dimensions		
Unit dimensions	Height	mm (in.)	200 (7-7 / 8)			220 (8-21 / 32)		
	Width	mm (in.)	750 (29-17 / 32)			1030 (40-35 / 64)		
	Depth	mm (in.)	640 (25-13 / 64)			745 (29-21 / 64)		
Net weight		kg (lbs.)	19 (42)					
Shipping weight		kg (lbs.)	23 (51)					
Shipping volume		m^3 (cu.ft)	0.169 (5.97)					

DATA SUBJECT TO CHANGE WITHOUT NOTICE.

Rated conditions

Cooling: Indoor air temperature 27°C DB / 19°C WB; Outdoor air temperature 35°C DB

Heating: Indoor air temperature 20°C DB; Outdoor air temperature 7°C DB / 6°C WB

17. Slim Low Static Ducted Type (M1 Type)

Unit specifications (E)

MODEL No.	Indoor Unit		S-45MM1E5					
POWER SOURCE			220 - 230 - 240 V, single-phase, 50/60 Hz					
PERFORMANCE			Cooling			Heating		
Capacity		kW	4.5			5.0		
		BTU / h	15,000			17,000		
Air circulation (Hi / Me / Lo)		m^3 / h	630 / 570 / 480					
Moisture removal (High)		Liters / h	1.7			–		
External static pressure (High)		Pa {mmAq}	15 {1.5}: At shipment 40 {4.1}: Using short circuit connection					
ELECTRICAL RATINGS								
Voltage rating		V	220	230	240	220	230	240
Available voltage range		V	198 - 264			198 - 264		
Running amperes		A	0.37	0.37	0.37	0.34	0.34	0.34
Power input		W	49	49	49	39	39	39
Power factor		%	60	58	55	52	50	48
Max. starting amperes		A	–	–	–	–	–	–
FEATURES								
Controls			Microprocessor					
Timer			ON / OFF Timer (Max. 72 h)					
Fan speeds			3 and Automatic control					
Air filter			Washable, easy access					
Refrigerant control			Electronic expansion valve					
Operation sound (Hi / Me / Lo)		dB-A	34 / 32 / 30					
Using short circuit connection (Hi / Me / Lo)		dB-A	36 / 34 / 32					
Refrigerant tubing connections			Flare type					
Refrigerant tube diameter	Liquid tube	mm (in.)	6.35 (1 / 4)					
	Gas tube	mm (in.)	12.7 (1 / 2)					
Drain connection			OD26 mm					
Drain pump			Max. head 500 mm above drain connection					
Remote controller			Optional (Wired / Wireless)					
Refrigerant tubing kit / Accessories			–					
Color (Approximate value)			–					
DIMENSIONS & WEIGHT			Unit dimensions			Package dimensions		
Unit dimensions	Height	mm (in.)	200 (7-7 / 8)			220 (8-21 / 32)		
	Width	mm (in.)	750 (29-17 / 32)			1030 (40-35 / 64)		
	Depth	mm (in.)	640 (25-13 / 64)			745 (29-21 / 64)		
Net weight		kg (lbs.)	19 (42)					
Shipping weight		kg (lbs.)	23 (51)					
Shipping volume		m^3 (cu.ft)	0.169 (5.97)					

DATA SUBJECT TO CHANGE WITHOUT NOTICE.

Rated conditions

Cooling: Indoor air temperature 27°C DB / 19°C WB; Outdoor air temperature 35°C DB

Heating: Indoor air temperature 20°C DB; Outdoor air temperature 7°C DB / 6°C WB

17. Slim Low Static Ducted Type (M1 Type)

Unit specifications (F)

MODEL No.	Indoor Unit		S-56MM1E5					
POWER SOURCE			220 - 230 - 240 V, single-phase, 50/60 Hz					
PERFORMANCE			Cooling			Heating		
Capacity		kW	5.6			6.3		
		BTU / h	19,000			21,000		
Air circulation (Hi / Me / Lo)		m^3 / h	750 / 690 / 600					
Moisture removal (High)		Liters / h	2.3			–		
External static pressure (High)		Pa {mmAq}	15 {1.5}: At shipment 40 {4.1}: Using short circuit connection					
ELECTRICAL RATINGS								
Voltage rating		V	220	230	240	220	230	240
Available voltage range		V	198 - 264			198 - 264		
Running amperes		A	0.48	0.48	0.48	0.45	0.45	0.45
Power input		W	64	64	64	54	54	54
Power factor		%	61	58	56	55	52	50
Max. starting amperes		A	–	–	–	–	–	–
FEATURES								
Controls			Microprocessor					
Timer			ON / OFF Timer (Max. 72 h)					
Fan speeds			3 and Automatic control					
Air filter			Washable, easy access					
Refrigerant control			Electronic expansion valve					
Operation sound (Hi / Me / Lo)		dB-A	35 / 33 / 31					
Using short circuit connection (Hi / Me / Lo)		dB-A	37 / 35 / 32					
Refrigerant tubing connections			Flare type					
Refrigerant tube diameter	Liquid tube	mm (in.)	6.35 (1 / 4)					
	Gas tube	mm (in.)	12.7 (1 / 2)					
Drain connection			OD26 mm					
Drain pump			Max. head 500 mm above drain connection					
Remote controller			Optional (Wired / Wireless)					
Refrigerant tubing kit / Accessories			–					
Color (Approximate value)			–					
DIMENSIONS & WEIGHT			Unit dimensions			Package dimensions		
Unit dimensions	Height	mm (in.)	200 (7-7 / 8)			220 (8-21 / 32)		
	Width	mm (in.)	750 (29-17 / 32)			1030 (40-35 / 64)		
	Depth	mm (in.)	640 (25-13 / 64)			745 (29-21 / 64)		
Net weight		kg (lbs.)	19 (42)					
Shipping weight		kg (lbs.)	23 (51)					
Shipping volume		m^3 (cu.ft)	0.169 (5.97)					

DATA SUBJECT TO CHANGE WITHOUT NOTICE.

Rated conditions

Cooling: Indoor air temperature 27°C DB / 19°C WB; Outdoor air temperature 35°C DB

Heating: Indoor air temperature 20°C DB; Outdoor air temperature 7°C DB / 6°C WB

17. Slim Low Static Ducted Type (M1 Type)

17-2. Major Component Specifications

Indoor unit (A)

MODEL No.			S-15MM1E5
Power source			220 - 230 - 240 V, single-phase, 50/60 Hz
Controller P.C.B. Ass'y			CB-15MM1E51 (Microprocessor)
Fan (Number...diameter)		mm	Centrifugal (1...ø190)
Fan motor			
	Model...Nominal output	W	DK8-63G280H...60 W
	Power source		280 / 340 VDC / 3 phase / 50 Hz
	No. of pole...r.p.m. (230V, High)	rpm	8P... 834
	Coil resistance (Ambient temperature 20°C)	Ω	–
	Run capacitor	VAC, μF	–
Electronic expansion valve			
	Coil		UKV-U032E
	Coil resistance (at 20°C)	Ω	ORG – GRY : 46 YEL – GRY : 46 RED – GRY : 46 BLK – GRY : 46
	Valve body		UKV-18D31
Heat exchanger			
	Coil		Aluminium plate fin / Copper tube
	Rows...fin pitch	mm	3...1.4
	Face area	m^2	0.128
Drain pump			PLD-12230ST-2
	Rated	V, W	AC 230 V, 50 Hz, 12 W
	Height from unit bottom & capacity		850 mm, 400 cc/min

4

17. Slim Low Static Ducted Type (M1 Type)

Indoor unit (B)

MODEL No.			S-22MM1E5
Power source			220 - 230 - 240 V, single-phase, 50/60 Hz
Controller P.C.B. Ass'y			CB-US075XH (Microprocessor)
Fan (Number...diameter)		mm	Centrifugal (1...ø190)
Fan motor			
	Model...Nominal output	W	DK8-63G280H...60 W
	Power source		280 / 340 VDC / 3 phase / 50 Hz
	No. of pole...r.p.m. (230V, High)	rpm	8P... 834
	Coil resistance (Ambient temperature 20°C)	Ω	–
	Run capacitor	VAC, μF	–
Electronic expansion valve			
	Coil		UKV-U032E
	Coil resistance (at 20°C)	Ω	ORG – GRY : 46 YEL – GRY : 46 RED – GRY : 46 BLK – GRY : 46
	Valve body		UKV-18D31
Heat exchanger			
	Coil		Aluminium plate fin / Copper tube
	Rows...fin pitch	mm	3...1.4
	Face area	m^2	0.128
Drain pump			PLD-12230ST-2
	Rated	V, W	AC 230 V, 50 Hz, 12 W
	Height from unit bottom & capacity		850 mm, 400 cc/min

4

17. Slim Low Static Ducted Type (M1 Type)

Indoor unit (C)

MODEL No.			**S-28MM1E5**
Power source			220 - 230 - 240 V, single-phase, 50/60 Hz
Controller P.C.B. Ass'y			CB-US075XH (Microprocessor)
Fan (Number...diameter)		mm	Centrifugal (1...ø190)
Fan motor			
	Model...Nominal output	W	DK8-63G280H...60 W
	Power source		280 / 340 VDC / 3 phase / 50 Hz
	No. of pole...r.p.m. (230V, High)	rpm	8P... 834
	Coil resistance (Ambient temperature 20°C)	Ω	–
	Run capacitor	VAC, μF	–
Electronic expansion valve			
	Coil		UKV-U032E
	Coil resistance (at 20°C)	Ω	ORG – GRY : 46 YEL – GRY : 46 RED – GRY : 46 BLK – GRY : 46
	Valve body		UKV-18D31
Heat exchanger			
	Coil		Aluminium plate fin / Copper tube
	Rows...fin pitch	mm	3...1.4
	Face area	m^2	0.128
Drain pump			PLD-12230ST-2
	Rated	V, W	AC 230 V, 50 Hz, 12 W
	Height from unit bottom & capacity		850 mm, 400 cc/min

4

17. Slim Low Static Ducted Type (M1 Type)

Indoor unit (D)

MODEL No.			**S-36MM1E5**
Power source			220 - 230 - 240 V, single-phase, 50/60 Hz
Controller P.C.B. Ass'y			CB-US075XH (Microprocessor)
Fan (Number...diameter)		mm	Centrifugal (1...ø190)
Fan motor			
	Model...Nominal output	W	DK8-63G280H...60 W
	Power source		280 / 340 VDC / 3 phase / 50 Hz
	No. of pole...r.p.m. (230V, High)	rpm	8P... 834
	Coil resistance (Ambient temperature 20°C)	Ω	–
	Run capacitor	VAC, μF	–
Electronic expansion valve			
	Coil		UKV-U032E
	Coil resistance (at 20°C)	Ω	ORG – GRY : 46 YEL – GRY : 46 RED – GRY : 46 BLK – GRY : 46
	Valve body		UKV-18D31
Heat exchanger			
	Coil		Aluminium plate fin / Copper tube
	Rows...fin pitch	mm	3...1.4
	Face area	m^2	0.128
Drain pump			PLD-12230ST-2
	Rated	V, W	AC 230 V, 50 Hz, 12 W
	Height from unit bottom & capacity		850 mm, 400 cc/min

4

17. Slim Low Static Ducted Type (M1 Type)

Indoor unit (E)

MODEL No.			S-45MM1E5
Power source			220 - 230 - 240 V, single-phase, 50/60 Hz
Controller P.C.B. Ass'y			CB-US075XH (Microprocessor)
Fan (Number...diameter)		mm	Centrifugal (1...ø190)
Fan motor			
	Model...Nominal output	W	DK8-63G280H...60 W
	Power source		280 / 340 VDC / 3 phase / 50 Hz
	No. of pole...r.p.m. (230V, High)	rpm	8P... 1,191
	Coil resistance (Ambient temperature 20°C)	Ω	–
	Run capacitor	VAC, μF	–
Electronic expansion valve			
	Coil		UKV-U032E
	Coil resistance (at 20°C)	Ω	ORG – GRY : 46 YEL – GRY : 46 RED – GRY : 46 BLK – GRY : 46
	Valve body		UKV-25D32
Heat exchanger			
	Coil		Aluminium plate fin / Copper tube
	Rows...fin pitch	mm	3...1.4
	Face area	m^2	0.128
Drain pump			PLD-12230ST-2
	Rated	V, W	AC 230 V, 50 Hz, 12 W
	Height from unit bottom & capacity		850 mm, 400 cc/min

4

17. Slim Low Static Ducted Type (M1 Type)

Indoor unit (F)

MODEL No.			**S-56MM1E5**
Power source			220 - 230 - 240 V, single-phase, 50/60 Hz
Controller P.C.B. Ass'y			CB-US075XH (Microprocessor)
Fan (Number...diameter)		mm	Centrifugal (1...ø190)
Fan motor			
	Model...Nominal output	W	DK8-63G280H...60 W
	Power source		280 / 340 VDC / 3 phase / 50 Hz
	No. of pole...r.p.m. (230V, High)	rpm	8P... 1,191
	Coil resistance (Ambient temperature 20°C)	Ω	–
	Run capacitor	VAC, μF	–
Electronic expansion valve			
	Coil		UKV-U032E
	Coil resistance (at 20°C)	Ω	ORG – GRY : 46 YEL – GRY : 46 RED – GRY : 46 BLK – GRY : 46
	Valve body		UKV-25D32
Heat exchanger			
	Coil		Aluminium plate fin / Copper tube
	Rows...fin pitch	mm	3...1.4
	Face area	m^2	0.128
Drain pump			PLD-12230ST-2
	Rated	V, W	AC 230 V, 50 Hz, 12 W
	Height from unit bottom & capacity		850 mm, 400 cc/min

4

17. Slim Low Static Ducted Type (M1 Type)

17-3. Dimensional Data

Indoor unit: S-15MM1E5 / 22MM1E5 / 28MM1E5 / 36MM1E5 / 45MM1E5 / 56MM1E5

unit : mm

①	Refrigerant tubing joint (narrow tube)
②	Refrigerant tubing joint (wide tube)
③	Upper and bottom drain port (O.D.26mm)
④	Suspension lug
⑤	Power supply outlet (ø17)
⑥	Frange for air discharge duct
⑦	PI cover
⑧	Electrical component box
⑨	Filter
⑩	Inter-unit control wiring and control wiring for group control outlet (ø15)
⑪	Remote control wiring outlet (ø15)

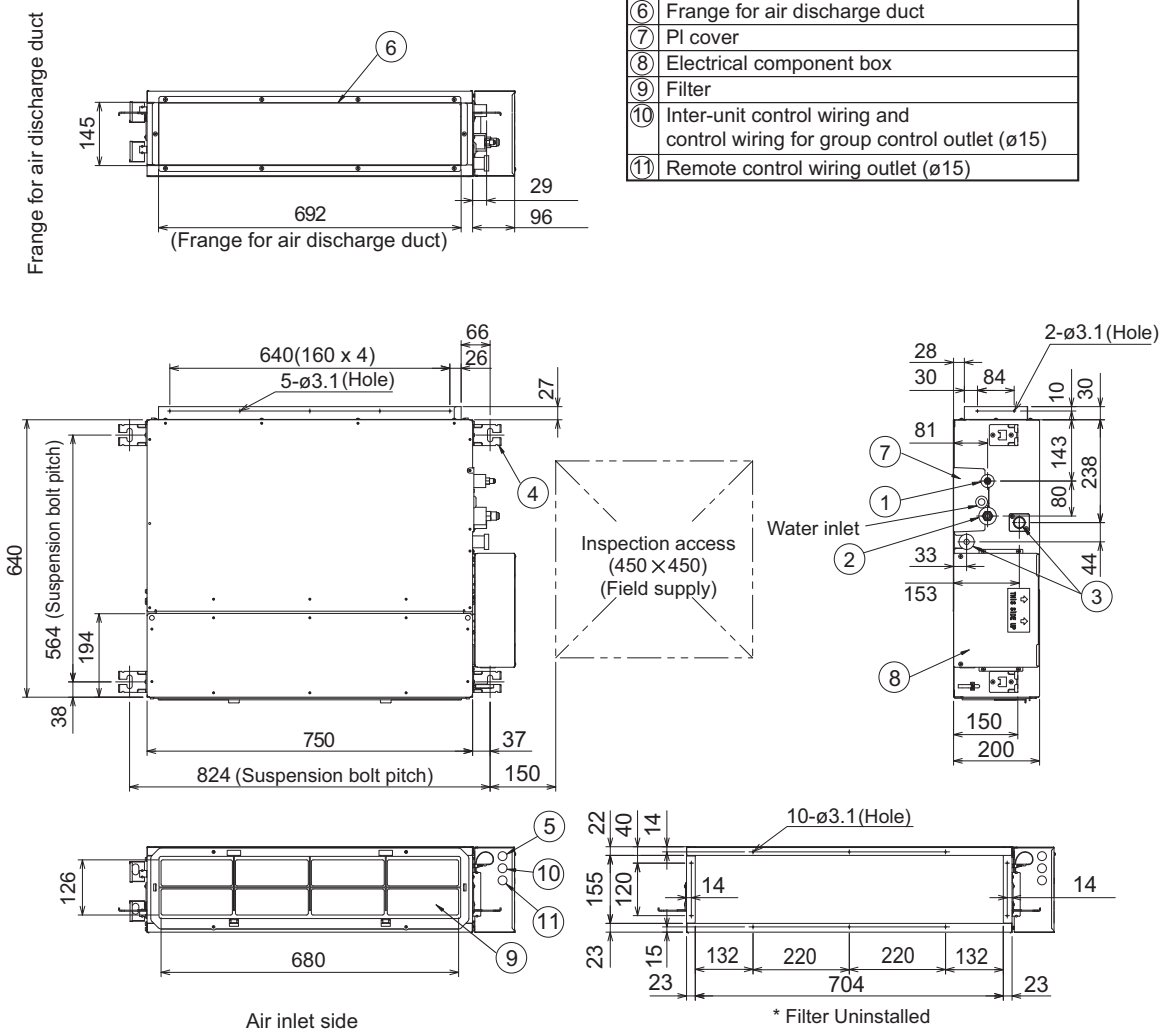

unit: mm

17. Slim Low Static Ducted Type (M1 Type)

17-4. Noise Criterion Curves

Both 50Hz and 60Hz
Strong
Weak

MODEL : S-15MM1E5 / 22MM1E5
SOUND LEVEL : STRONG 28 dB(A)
WEAK 25 dB(A)
CONDITION : 1.5 m directly below unit

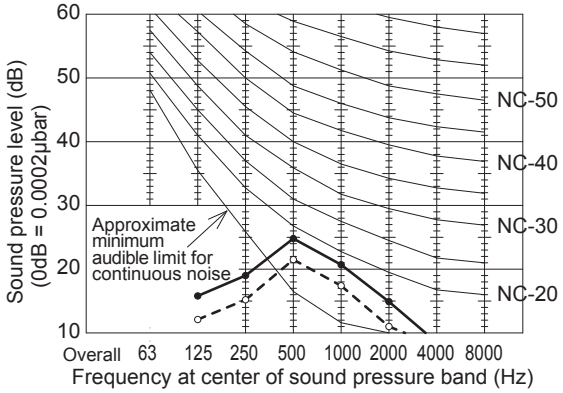

MODEL : S-28MM1E5
SOUND LEVEL : STRONG 30 dB(A)
WEAK 27 dB(A)
CONDITION : 1.5 m directly below unit

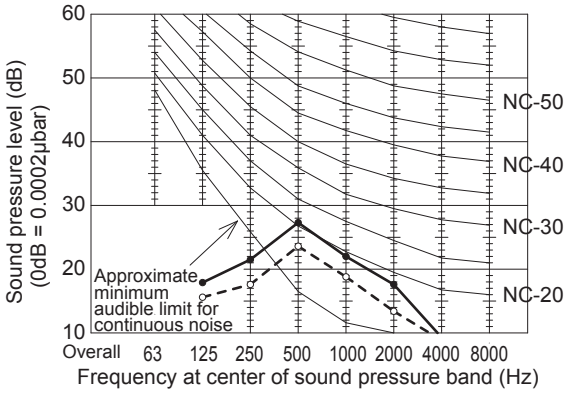

MODEL : S-36MM1E5
SOUND LEVEL : STRONG 32 dB(A)
WEAK 28 dB(A)
CONDITION : 1.5 m directly below unit

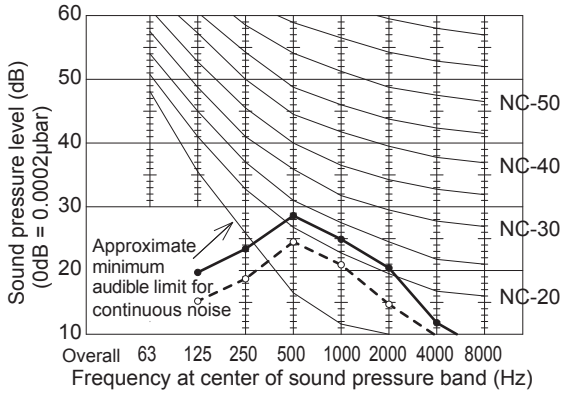

MODEL : S-45MM1E5
SOUND LEVEL : STRONG 34 dB(A)
WEAK 30 dB(A)
CONDITION : 1.5 m directly below unit

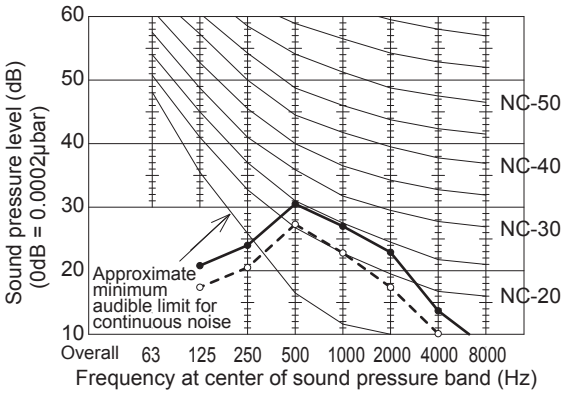

MODEL : S-56MM1E5
SOUND LEVEL : STRONG 35 dB(A)
WEAK 31 dB(A)
CONDITION : 1.5 m directly below unit

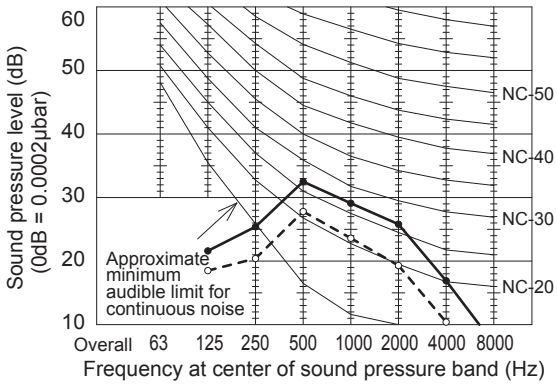

REMARKS:
1. Value obtained in the actual place where the unit is installed may be slightly higher than the values shown in this graph because of the conditions of operation, the structure of the building, the backgroundnoise and other factors.
2. The test results were obtained from an anechoic room.
3. The layout of the testing condition is shown at right.

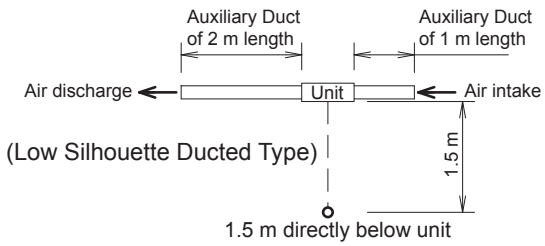

NOTE

To evaluate the noise level, the maximum value of the measured sound pressure level is used. Read the value at each frequency level (on horizontal axis, center of the sound pressure band) from 63 Hz to 8000 Hz, and select the corresponding maximum value indicated on the vertical axis.

17. Slim Low Static Ducted Type (M1 Type)

17-5. Increasing the Fan Speed

■ For Short Circuit Connection

- The standard (before shipment) external static pressure is shown in the table below.
- When using with a higher static pressure, it is necessary to change to the high static pressure mode.

External static pressure

Type	15	22	28	36	45	56
Standard	10	10	15	15	15	15
High static pressure	30	30	30	40	40	40

When using with high static pressure mode, set the indoor unit control board as shown at right.

Follow the below procedure while the unit is turned off.

(1) Open the cover of the electrical box and confirm that it is the indoor unit control board.

(2) Connect the short circuit connector to the short circuit pin TP3 (2P: Yellow) of the indoor unit control board.

- In case of wired remote control setting, do not use the short circuit connector.

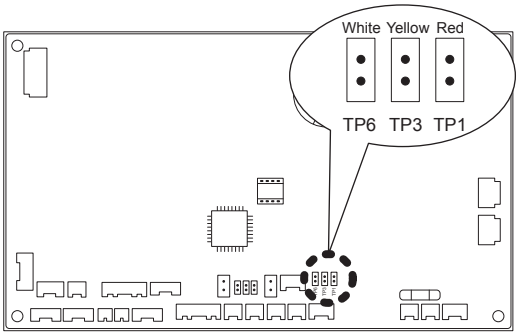

Indoor control board

■ For Wired Remote Control

① Press and hold the [🔧], [⌂] and [CANCEL] buttons simultaneously for 4 seconds or longer.

② "SETTING," unit No. "1-1" (or "ALL" in the case of group control), item code "10," and settings data "00XX" are displayed blinking on the remote controller LCD display.
At this time, the indoor unit fan (or all indoor unit fans in the case of group control) begins operating.

③ Press the temperature setting [▲] / [▼] buttons to select the item code "5d".

④ Press the timer time [▲] / [▼] buttons to select the desired setting data.
* For item codes and setting data, refer to the right table.

⑤ Press the [SET] button.
(The display stops blinking and remains lit, and setting is completed.)

⑥ Press the [🔧] button to return to normal remote controller display.

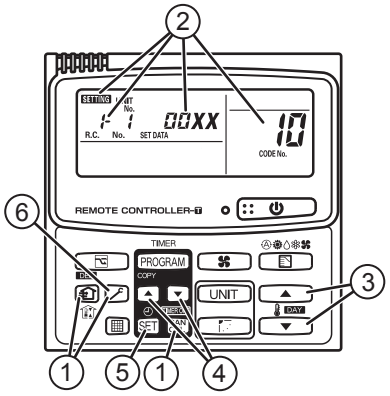

Item code	No.	Description
5d	0000	Standard (setting at shipment)
	0003	High static-pressure

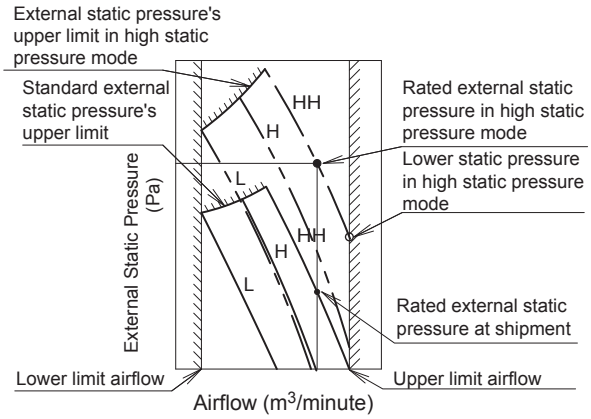

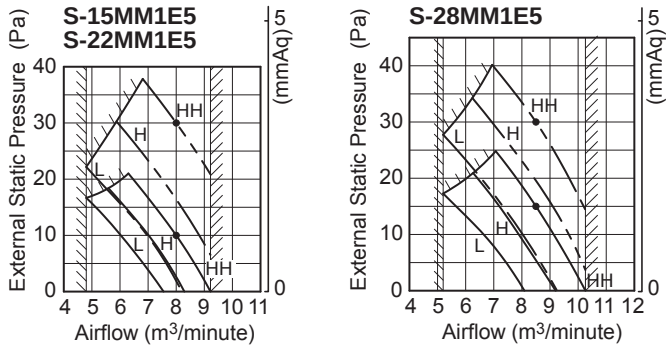

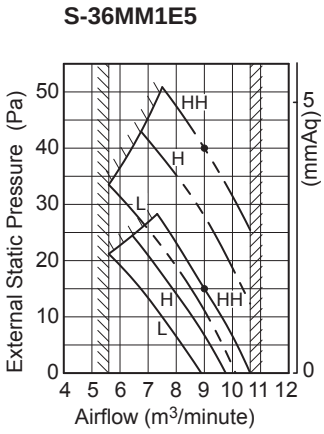

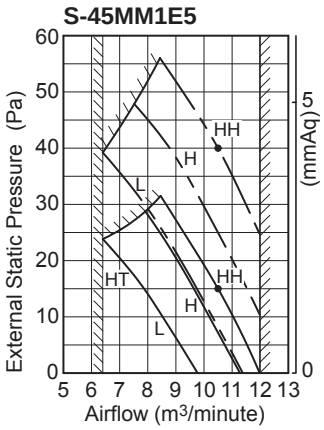

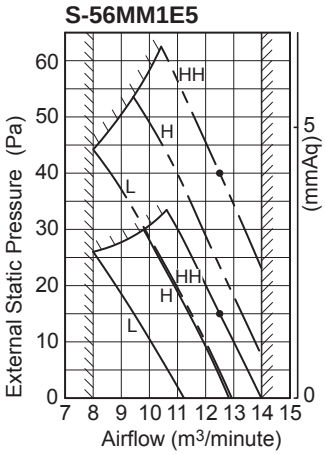

18. Intaking Fresh Air of 4-Way Cassette Type and Slim Low Static Ducted Type

● Precautions Regarding External Air Intake

(1) Ventilation Load

Ensure that the design of the air-conditioner takes air-conditioning loads into consideration when external air intake is involved.

(2) Restrictions on External Air Intake

Ensure that the design conforms to the restrictions on air intake volume stipulated in accordance with the model of the indoor unit and the intake method. Consideration must also be taken to mixed air content listed in (3) below without fail.

* If the air intake volume does not satisfy the required ventilation volume, air must be fed into the room separately with the use of a total heat exchanger or a fresh air processing air-conditioner, etc.

(3) Mixed Air

The amount of external air intake must be set within the scope of the unit's usage conditions when external air and internal air is mixed together. This is especially important in the following cases, in which it is necessary to either feed external air into the room after it has been processed or reduce the amount of external air that is fed in.

① When the external dew-point temperature is greater than the dry-bulb temperature of the air sucked into the unit.
Ensure that processing is performed so that the external dew-point temperature is lower than the temperature of the air sucked into the unit to prevent the risk of condensation building up.

② In the case of low external temperatures.
There are cases in which the temperature of mixed air is lower than the operating range of the unit if excessive amounts of external air intake are used when the external temperature is low. This problem is to be solved by either feeding external air into the room after it has been processed or reducing the amount of external air that is fed in.

③ When used in combination with humidifiers
External air must always be processed when the external air temperature reaches freezing point to prevent the risk of the humidifier freezing.

(4) Arranging Ducts and Filters in the Field

External air intake ducting must be arranged in the field. External air filters must also be installed without fail in order to prevent the intake of dust and grit.

(5) Thermal Insulation for Ducts

Ensure that all external air intake ducting is heat-insulated without fail. Failure to observe this may result in the build-up of condensation.

(6) External Air Intake Coupling

Ensure that the design for external air intake is coupled with the fan blower operations of the indoor unit. There are cases in which the dust that accumulates in the filter is blown into the room if the external air is fed from the filter. There are also cases in which the noise of external air being fed into the room can be heard from the indoor unit if external air is forcibly fed when the booster fan or other components on the indoor unit are not operating.

(7) Booster Fan Selection

Select the booster fan in accordance with the resistance of the external air intake duct (diagram on the pressure loss characteristics of the air flow volume for flexible cylindrical ducts) and the resistance prevalent inside the unit (volume of external air fed and the resistance within the unit).

(8) Attaching the External Air Intake Flange

Flexible Cylindrical Duct

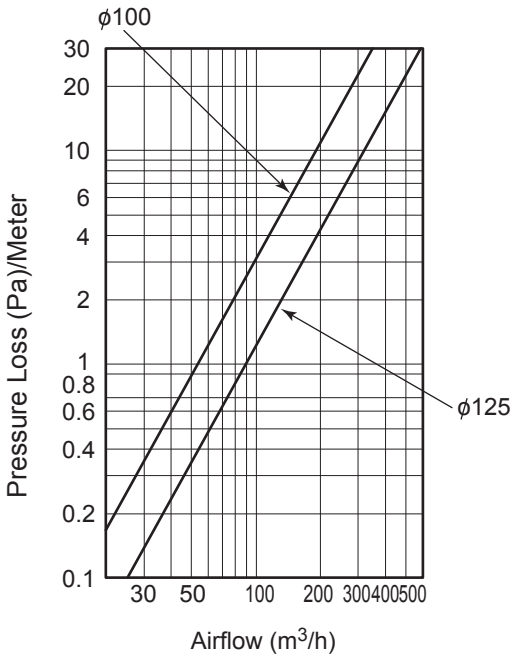

Air Flow Volume for Flexible Cylindrical Duct-Pressure Loss

4

18. Intaking Fresh Air of 4-Way Cassette Type and Slim Low Static Ducted Type

- **U1, Y1 Types**
  When an External Air Intake Flange (ø100) is in Use

External Air Intake Volume and Resistance and Operation Noise Characteristics within the Unit

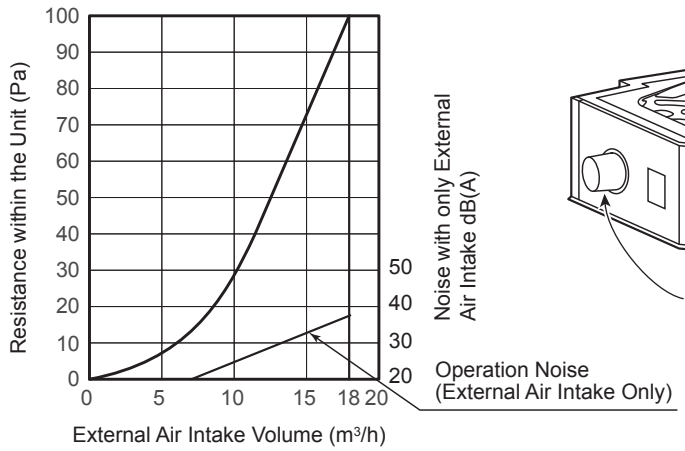

With the External Air Intake Flange Attached

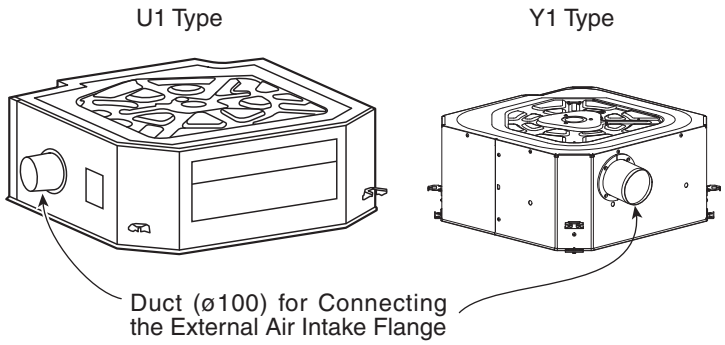

- Calculate the operation noise when external air is being fed by combining the noise when only external air is being fed as shown in the graph for operation noise characteristics and the operation noise of the unit as stipulated in the catalogue.
- The operation noise conforms to JIS standards and constitute measurements taken in an anechoic chamber 1.5m directly beneath the indoor unit. Under normal circumstances, the values shown here are greater owing to the effects of surrounding noise and reverberation when the unit is actually installed.

- **U1, Y1 Types**
  The amount of external air that is possible to feed when it is fed directly into the unit (ø100)

For use with mini cassettes

Type	22	28	36	45	56
Permissible Air Intake Volume (m3/h)	13	13	13	15	15

NOTE

The operation noise for models that use small units is lower, so use values that are within the range shown in the above table. Using values that exceed these will result in noise when only external air is fed being louder than the noise emitted from the unit.

External Air Intake Volume and Resistance within the Unit

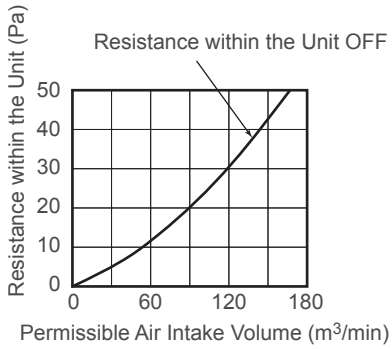

- **M1 Type**
  The amount of external air that is possible to feed when connected to round ducts (ø100).

Type	15	22	28	36	45	56
Permissible Air Intake Volume (m3/h)	96	96	102	108	126	150

NOTE

Using values that exceed those shown in the above table will result in noise when only external air is fed being louder than the noise emitted from the indoor unit, so only use values that are within the range of the above values.

With the External Air Intake Flange Attached

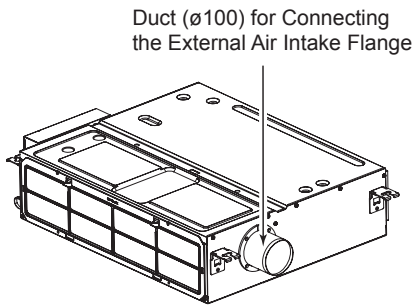

Contents

5. TEST RUN

1. Preparing for Test Run 5-2
2. Test Run Procedure 5-3
3. Main Outdoor Unit PCB Setting 5-4
4. Auto Address Setting 5-7
5. Remote Controller Test Run Settings 5-13
6. Caution for Pump Down 5-14
7. Meaning of Alarm Messages 5-15

1. Preparing for Test Run

1. Preparing for Test Run

- **Before attempting to start the air conditioner, check the following.**

(1) All loose matter is removed from the cabinet especially steel filings, bits of wire, and clips.

(2) The control wiring is correctly connected and all electrical connections are tight.

(3) The protective spacers for the compressor used for transportation have been removed. If not, remove them now.

(4) The transportation pads for the indoor fan have been removed. If not, remove them now.

(5) The power has been connected to the unit for at least 5 hours before starting the compressor. The bottom of the compressor should be warm to the touch and the crankcase heater around the feet of the compressor should be hot to the touch.
(Fig. 5-1)

(6) Both the gas and liquid tube service valves are open. If not, open them now. (Fig. 5-2)

(7) Request that the customer be present for the trial run. Explain the contents of the operating instructions, then have the customer actually operate the system.

(8) Be sure to give the operating instructions and warranty certificate to the customer.

(9) When replacing the control PCB, be sure to make all the same settings on the new PCB as were in use before replacement.
The existing EEPROM is not changed, and is connected to the new control PCB.

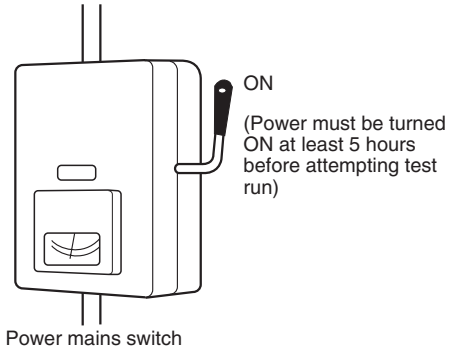

Fig. 5-1

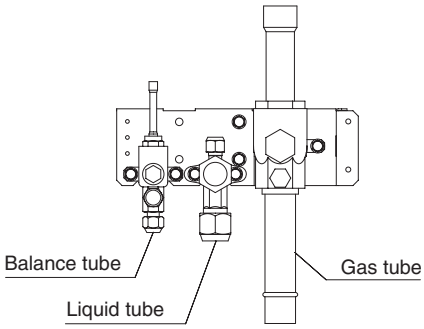

Fig. 5-2

2. Test Run Procedure

2. Test Run Procedure

Items to Check Before the Test Run

1. Turn the remote power switch on at least 5 hours before the test, in order to energize the crankcase heater.
2. After performing the leak inspection, applying vacuum, and performing refrigerant charge for the tubing which is connected on-site, fully open the outdoor unit service valve. However if only one outdoor unit is installed, a balance tube is not used. Therefore, leave the valve fully closed.
3. When replacing the control PCB, be sure that the settings on the new PCB match those on the old PCB.
4. Use caution when making the settings. If there are duplicated system addresses, or if the settings for the Nos. of the indoor units are not consistent, an alarm will occur and the system will not start.
5. These settings are not made on the indoor unit PCB.

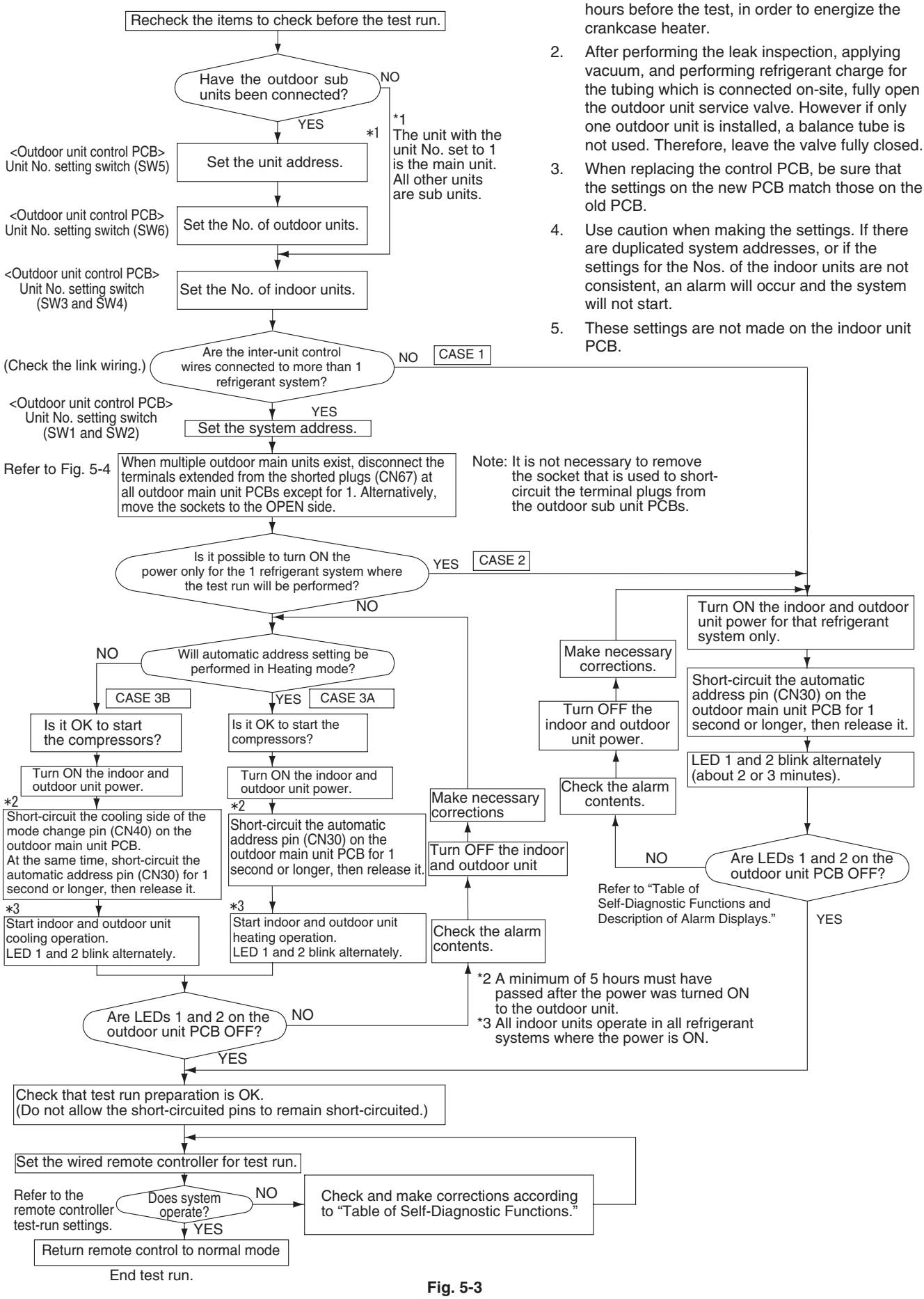

Fig. 5-3

3. Main Outdoor Unit PCB Setting

3. Main Outdoor Unit PCB Setting

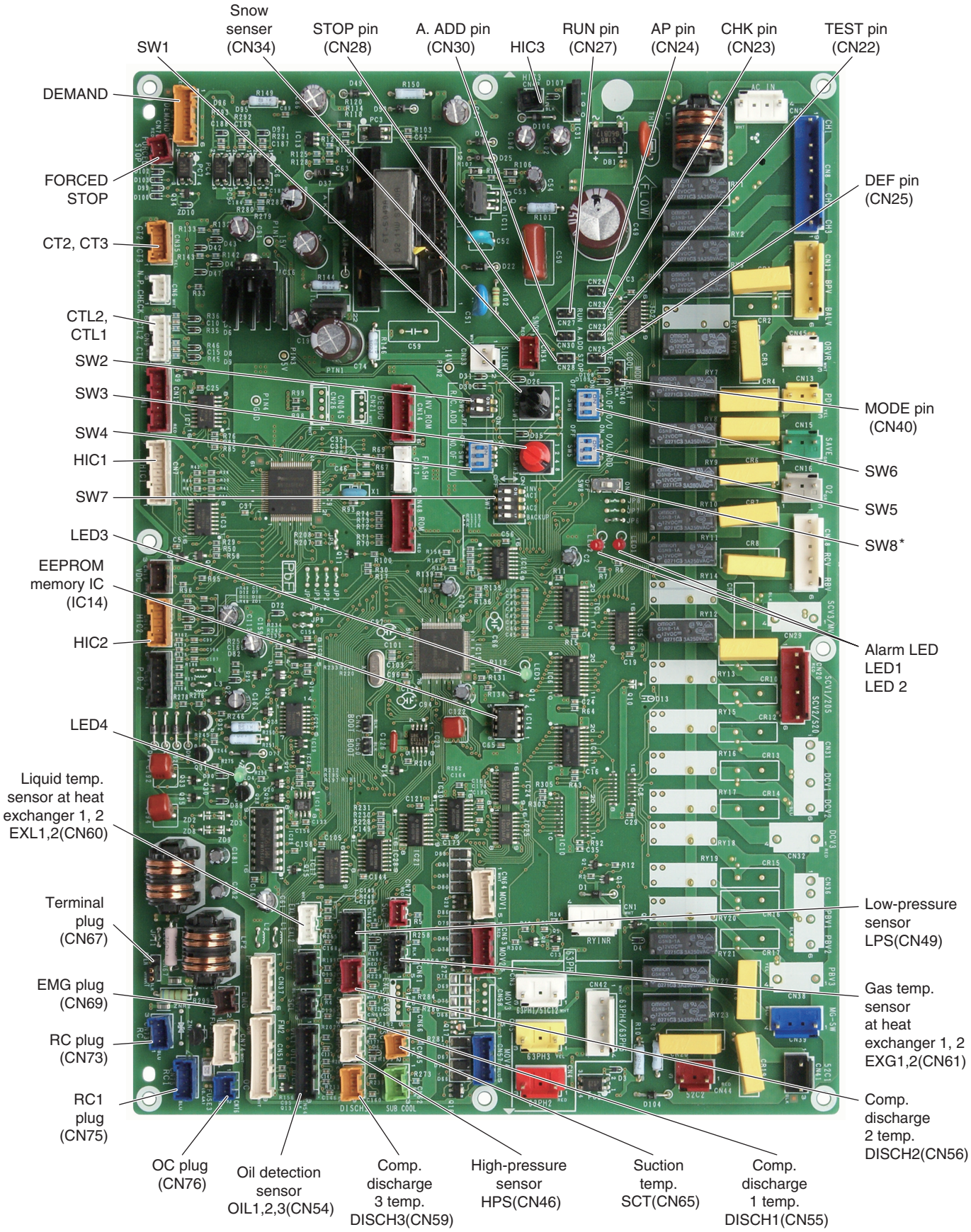

Fig. 5-4

* When setting to ON (terminal No.SW8), the COP specification of the outdoor unit turns into “High-COP”.
For the detail, refer to "9.INSTRUCTIONS FOR HIGH-COP MODE" in the Installation Instructions.

3. Main Outdoor Unit PCB Setting

● **Examples of the No. of indoor units settings (SW4, SW3)**

No. of indoor units	Indoor unit setting (SW4) (3P DIP switch, blue) 10 20 30	Indoor unit setting (SW3) (Rotary switch, red)
1 unit (factory setting)	All OFF	Set to 1
11 units	1 ON	Set to 1
21 units	2 ON	Set to 1
31 units	3 ON	Set to 1
40 units	1 & 3 ON	Set to 0
58 units	2 & 3 ON	Set to 8
64 units	All ON	Set to 4

● **Examples of refrigerant circuit (R.C.) address settings (required when link wiring is used) (SW2, SW1)**

System address No.	System address (SW2) (2P DIP switch, black) 10 20	System address (SW1) (Rotary switch, black)
System 1 (factory setting)	Both OFF	Set to 1
System 11	1 ON	Set to 1
System 21	2 ON	Set to 1
System 30	1 & 2 ON	Set to 0

● **Examples of the No. of outdoor units settings (SW6)**

No. of outdoor units	Outdoor unit setting (SW6) (3P DIP switch, blue)
1 unit (factory setting)	1 ON
2 units	2 ON
3 units	1 & 2 ON
4 units	3 ON

● **Address setting of main outdoor unit (SW5)**

Unit No. setting	Address setting of outdoor unit (SW5) (3P DIP switch, blue)
Unit No. 1 (main unit) (factory setting)	

● **Address setting of sub outdoor unit**

Unit No. setting	Address setting of outdoor unit (SW5) (3P DIP switch, blue)
Unit No. 2 (sub unit)	2 ON
Unit No. 3 (sub unit)	1 & 2 ON
Unit No. 4 (sub unit)	3 ON

The sub unit control PCB contains the same switches as the main unit control PCB for No. of indoor units, No. of outdoor units, and system address. However it is not necessary to set these switches.

3. Main Outdoor Unit PCB Setting

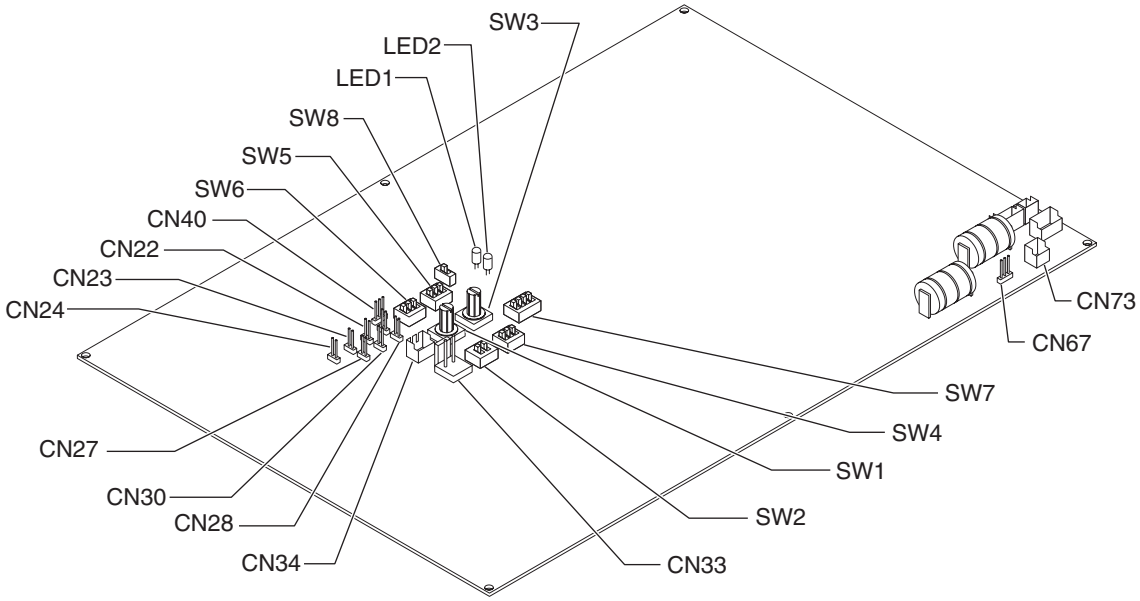

● **Name And Function Of Each Switch On Outdoor Unit Control PC Board**

• Mode Select switch (3P, Black) (CN40)	Changes to the cooling or heating mode. (Main outdoor unit is only usable.)
During normal drive	When the cooling side is short-circuit, all indoor units change to cooling mode. When the heating side is short-circuit, changes to all heating mode.
• Auto Address pin (2P, Black) (CN30)	Short-circuit for 1 second or longer. → When opened, the auto address mode starts. When the short-circuit remains in effectfor more than 1 second during auto address, the auto address is interrupted.
• Test Run pin (2P, Black) (CN23)	When set to short-circuit, changes to the test run mode. (The test run mode is automatically cancelled after an hour.) When short-circuit is cancelled, the test run mode is cancelled.
• RC socket (3P, Blue) (CN73)	Connects to the outdoor unit maintenance remote control and the content of an alarm message will be checked.
• Drive pin (2P, Black) (CN27)	When the pulse signal applied after short-circuit, all indoor units within the same series will be operated.
• Stop pin (2P, Black) (CN28)	When the pulse signal applied after short-circuit, all indoor units within the same series will be stopped. (When set to short-circuit, the remote control from the indoor unit can not be operated.)
• Vacuum pin (2P, Black) (CN24)	Used for vacuuming the outdoor unit.
Socket for Snow Area	
• Snow socket (3P, Red) (CN34)	Used for installing the snow sensor
Silent Socket	
• Socket for silent mode (2P, White) (CN33)	Used for installing the external timer for the silent mode

4. Auto Address Setting

4. Auto Address Setting

Basic wiring diagram: Example (1)

• If link wiring is not used
(The inter-unit control wires are not connected to multiple refrigerant systems.)
Indoor unit addresses can be set without operating the compressors.

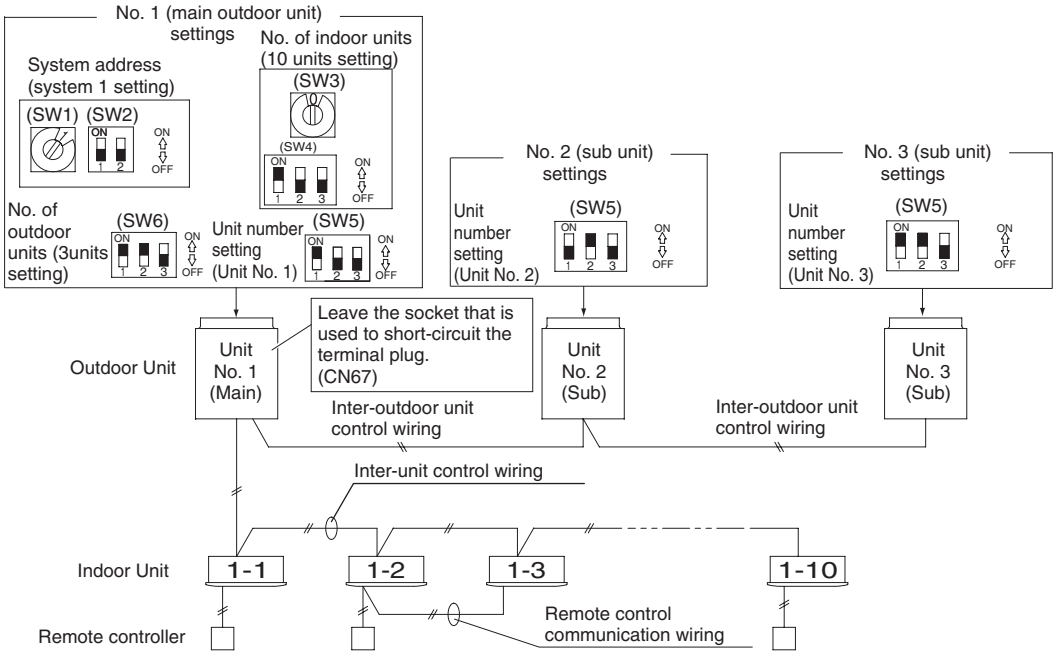

Fig. 5-5

Case 1

(1) Automatic Address Setting from the Outdoor Unit

1. To set the number of outdoor units, on the outdoor main unit control PCB set the No. of outdoor units DIP switch (SW6) to 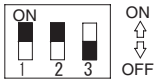 (3 units), and set the unit No. DIP switch (SW5) to 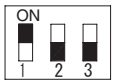 (unit No. 1 – main outdoor unit).

2. On the No. 2 (sub) unit control PCB, set the unit No. switch (SW5) to 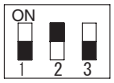 (unit No. 2).

   On the No. 3 (sub) unit control PCB, set the unit No. switch (SW5) to 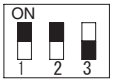 (unit No. 3).

3. On the outdoor main unit control PCB, check that the system address rotary switch (SW1) is set to “1” and that the DIP switch (SW2) is set to 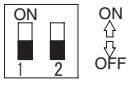 “0.” (These are the settings at the time of factory shipment.)

4. To set the number of indoor units that are connected to the outdoor unit to 10 on the outdoor main unit control PCB, set the No. of indoor units DIP switch (SW4) to “1,” and set the rotary switch (SW3) to “0.”

5. Turn ON the power to the indoor and outdoor units.
6. On the outdoor main unit control PCB, short-circuit the automatic address pin (CN30) for 1 second or longer, then release it.
   ↓
   (Communication for automatic address setting begins.)

   * To cancel, again short-circuit the automatic address pin (CN30) for 1 second or longer, then release it.
   ↓ The LED that indicates that automatic address setting is in progress turns OFF and the process is stopped. Be sure to perform automatic address setting again.

   (Automatic address setting is completed when LEDs 1 and 2 on the outdoor main unit control PCB turn OFF.)
   ↓
7. Operation from the remote controllers is now possible.
   * To perform automatic address setting from the remote controller, perform steps 1 to 5, then use the remote controller and complete automatic address setting.

● Refer to “Automatic Address Setting from the Remote Controller.”

4. Auto Address Setting

Basic wiring diagram: Example (2)

• If link wiring is used * When multiple outdoor main units exist, remove the socket that is used to short-circuit the terminal plug (CN67) from all outdoor main unit PCBs except for one unit.
Alternatively, move the sockets to the "OPEN" side.

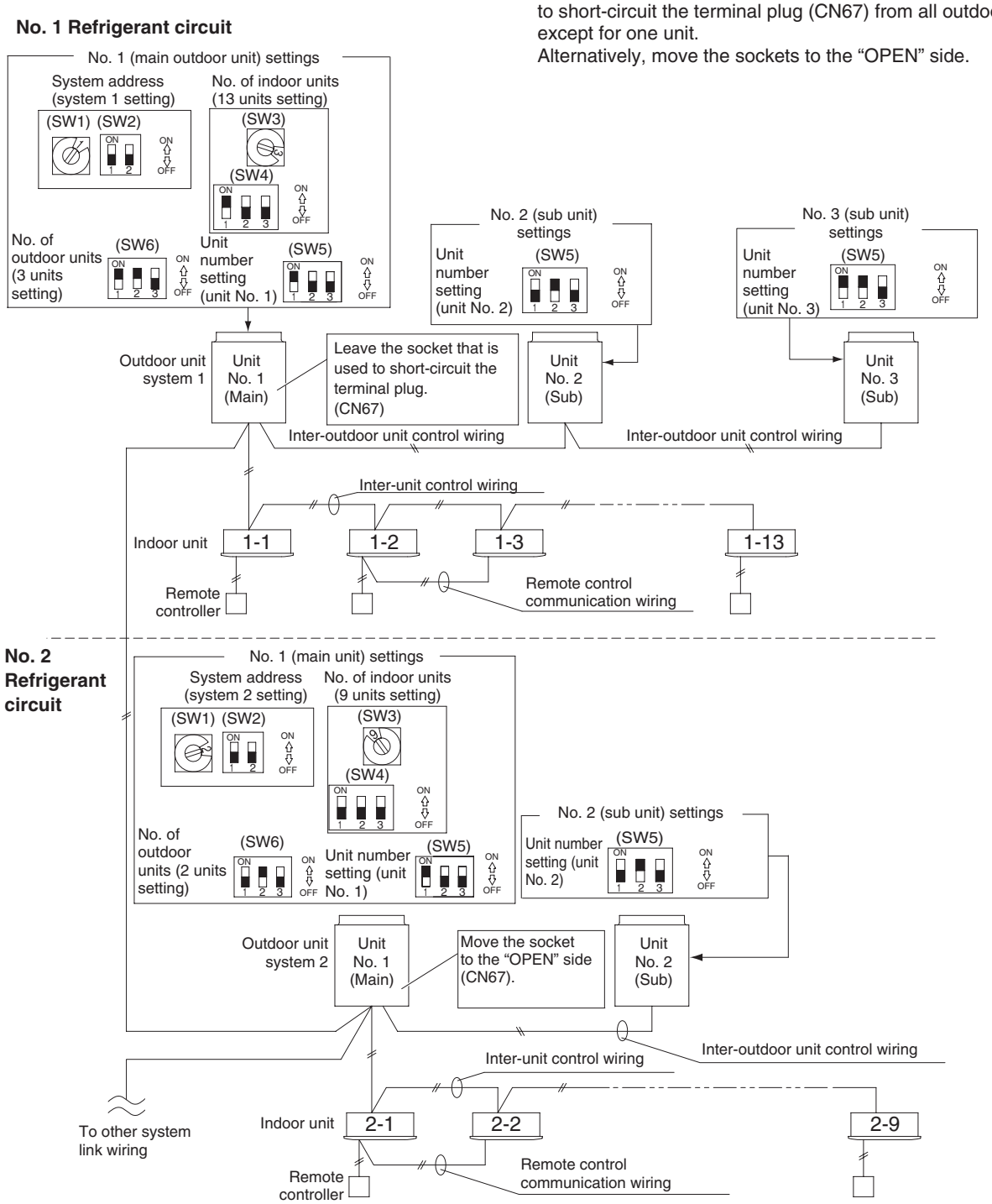

Make settings as appropriate for the cases listed below.
(Refer to the instructions on the following pages.)

- **Indoor and outdoor unit power can be turned ON for each system separately.** → Case 2
- **Indoor and outdoor unit power cannot be turned ON for each system separately.**
  - Automatic address setting in Heating mode → Case 3A
  - Automatic address setting in Cooling mode → Case 3B

Fig. 5-6

4. Auto Address Setting

Case 2 **Automatic Address Setting (no compressor operation)**

- Indoor and outdoor unit power can be turned ON for each system separately.
  Indoor unit addresses can be set without operating the compressors.

Automatic Address Setting from Outdoor Unit

1. On the No. 1 (main) unit control PCB, set the unit No. switch (SW5) to 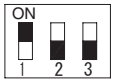

(unit No. 1).

   On the No. 2 (sub) unit control PCB, set the unit No. switch (SW5) to 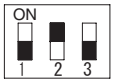

(unit No. 2).

   On the No. 3 (sub) unit control PCB, set the unit No. switch (SW5) to 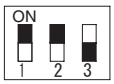

(unit No. 3).

2. To set the number of outdoor units on the outdoor main unit control PCB, set the No. of outdoor units DIP switch (SW6) to 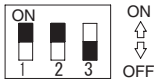

(3 units).

3. On the outdoor main unit control PCB, check that the system address rotary switch (SW1) is set to “1” and that the DIP switch (SW2) is set to “0”

. (These are the settings at the time of factory shipment.)

4. To set the number of indoor units that are connected to the outdoor unit to 13 on the outdoor main unit control PCB, set the No. of indoor units DIP switch (SW4) to “1” 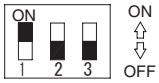

, and set the rotary switch (SW3) to “3.”

5. Turn on power to all indoor and outdoor units in the system.
6. Short-circuit the automatic address pin at the outdoor main unit (CN30) for 1 second or longer, then release it.

   ↓

   (Communication for automatic address setting begins.)

   ↓

   * To cancel, again short-circuit the automatic address pin (CN30) for 1 second or longer, then release it. The LED that indicates automatic address setting is in progress turns OFF and the process is stopped. Be sure to perform automatic address setting again.

   (Automatic address setting is completed when LEDs 1 and 2 on the outdoor main unit control PCB turn OFF.)

   ↓

7. Next turn the power ON only for the indoor and outdoor units of the next (different) system. Repeat steps 1 – 5 in the same way to complete automatic address settings for all systems.

   ↓

8. Operation from the remote controllers is now possible.
   * To perform automatic address setting from the remote controller, perform steps 1 – 5, then use the remote controller and complete automatic address setting.

- Refer to “Automatic Address Setting from Remote Controller.”

4. Auto Address Setting

Case 3A **Automatic Address Setting in Heating Mode**

- Indoor and outdoor unit power cannot be turned ON for each system separately.
  In the following, automatic setting of indoor unit addresses is not possible if the compressors are not operating.
  Therefore perform this process only after completing all refrigerant tubing work.
  In case of the WHE system, this function does not work properly. Perform Case 1 or Case 2

Automatic Address Setting from Outdoor Unit

1. Perform steps 1 – 4 in the same way as for Case 2 .
5. Turn the indoor and outdoor unit power ON at all systems.

   ↓

6. To perform automatic address setting in Heating mode , on the outdoor main unit control PCB in the refrigerant system where you wish to set the addresses, short-circuit the automatic address pin (CN30) for 1 second or longer, then release it.
   (Be sure to perform this process for one system at a time. Automatic address settings cannot be performed for more than one system at the same time.)

   ↓

   (Communication for automatic address setting begins, **the compressors turn ON, and automatic address setting in Heating mode begins.**)
   (All indoor units operate.)

   ↓

   * To cancel, again short-circuit the automatic address pin (CN30) for 1 second or longer, then release it. The LED that indicates automatic address setting is in progress turns OFF and the process is stopped. Be sure to perform automatic address setting again.

   (Automatic address setting is completed when the compressors stop and LEDs 1 and 2 on the main unit control PCB turn OFF.)

   ↓

7. At the outdoor main unit in the next (different) system, short-circuit the automatic address pin (CN30) for 1 second or longer, then release it.

   ↓

   (Repeat the same steps to complete automatic address setting for all units.)

   ↓

8. Operation from the remote controllers is now possible.
   * To perform automatic address setting from the remote controller, perform steps 1 – 5, then use the remote controller and complete automatic address setting.

- Refer to “Automatic Address Setting from Remote Controller.”

4. Auto Address Setting

Case 3B **Automatic Address Setting in Cooling Mode**

- Indoor and outdoor unit power cannot be turned ON for each system separately.
  In the following, automatic setting of indoor unit addresses is not possible if the compressors are not operating.
  Therefore perform this process only after completing all refrigerant tubing work.
  Automatic address setting can be performed during Cooling operation.
  In case of the WHE system, this function does not work properly. Perform Case 1 or Case 2

Automatic Address Setting from Outdoor Unit

1. Perform steps 1 – 4 in the same way as for Case 2 .
5. Turn the indoor and outdoor unit power ON at all systems.

↓

6. To perform automatic address setting in Cooling mode , on the outdoor main unit control PCB in the refrigerant system where you wish to set the addresses, short-circuit the mode change 2P pin (CN40). At the same time, short-circuit the automatic address pin (CN30) for 1 second or longer, then release it. (Be sure to perform this process for one system at a time. Automatic address settings cannot be performed for more than one system at the same time.)

↓

(Communication for automatic address setting begins, **the compressors turn ON, and automatic address setting in Cooling mode begins.**)
(All indoor units operate.)

* To cancel, again short-circuit the automatic address pin (CN30) for 1 second or longer, then release it.
The LED that indicates automatic address setting is in progress turns OFF and the process is stopped.
Be sure to perform automatic address setting again.

↓

(Automatic address setting is completed when the compressors stop and LEDs 1 and 2 on the outdoor main unit control PCB turn OFF.)

↓

7. At the outdoor main unit in the next (different) system, short-circuit the automatic address pin (CN30) for 1 second or longer, then release it.

↓

(Repeat the same steps to complete automatic address setting for all units.)

↓

8. Operation from the remote controllers is now possible.
   * Automatic address setting in Cooling mode cannot be done from the remote controller.

Automatic Address Setting* from the Remote Controller

Selecting each refrigerant system individually for automatic address setting

---Automatic address setting for each system: Item code “A1”

1. Press the remote controller timer time ▲ button and 🔧 button at the same time. (Press and hold for 4 seconds or longer.)
2. Next, press either the temperature setting ▲ or ▼ button.
   (Check that the item code is “A1.”)
3. Use either the UNIT or button to set the system No. to perform automatic address setting.
4. Then press the SET button.
   (Automatic address setting for one refrigerant system begins.)
   (When automatic address setting for one system is completed, the system returns to normal stopped status.) <Approximately 4 – 5 minutes is required.> (During automatic address setting, “ SETTING ” is displayed on the remote controller. This message disappears when automatic address setting is completed.)
5. Repeat the same steps to perform automatic address setting for each successive system.

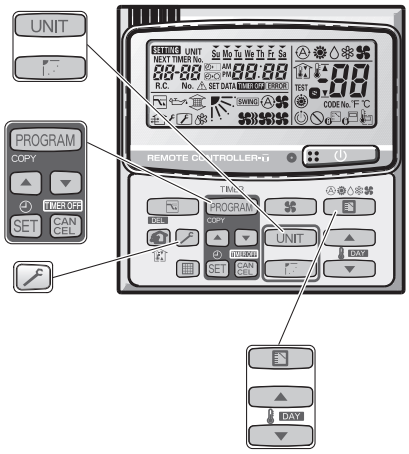

4. Auto Address Setting

Display during automatic address setting

● On outdoor main unit PCB

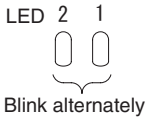

* Do not short-circuit the automatic address setting pin (CN30) again while automatic address setting is in progress. Doing so will cancel the setting operation and will cause LEDs 1 and 2 to turn OFF.

* When automatic address setting has been successfully completed, both LEDs 1 and 2 turn OFF.
* If automatic address setting is not completed successfully, refer to the table below and correct the problem. Then perform automatic address setting again.

● Display details of LEDs 1 and 2 on the outdoor unit control PCB
(☼: ON ✷: Blinking ●: OFF)

LED 1	LED 2	Display meaning
☼	☼	After the power is turned ON (and automatic address setting is not in progress), no communication with the indoor units in that system is possible.
●	☼	After the power is turned ON (and automatic address setting is not in progress), 1 or more indoor units are confirmed in that system; however, the number of indoor units does not match the number that was set.
✷ Alternating	✷	Automatic address setting is in progress.
●	●	Automatic address setting completed.
✷ Simultaneous	✷	At time of automatic address setting, the number of indoor units did not match the number that was set. " ⚠ " (when indoor units are operating) indication appears on the display.
✷ Alternating	✷	Refer to "Table of Self-Diagnostic Functions and Description of Alarm Displays."

Note: " ⚠ " indicates that the solenoid is fused or that there is a CT detection current failure (current is detected when the compressor is OFF).

● Remote controller display

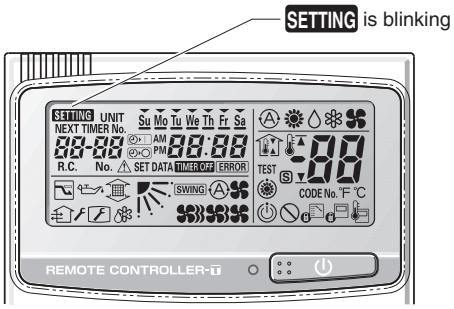

5

4. Auto Address Setting
5. Remote Controller Test Run Settings

Request concerning recording the indoor/outdoor unit combination Nos.

After automatic address setting has been completed, be sure to record them for future reference.
List the outdoor main unit system address and the addresses of the indoor units in that system in an easily visible location (next to the nameplate), using a permanent marking pen or similar means that cannot be abraded easily.

Example: (Outdoor) 1 – (Indoor) 1-1, 1-2, 1-3… (Outdoor) 2 – (Indoor) 2-1, 2-2, 2-3…

These numbers are necessary for later maintenance. Please be sure to indicate them.

Checking the indoor unit addresses

Use the remote controller to check the indoor unit address.

<If 1 indoor unit is connected to 1 remote controller>

1. Press and hold the button and button for 4 seconds or longer (simple settings mode).
2. The address is displayed for the indoor unit that is connected to the remote controller.
   (Only the address of the indoor unit that is connected to the remote controller can be checked.)
3. Press the button again to return to normal remote controller mode.

<If multiple indoor units are connected to 1 remote controller (group control)>

1. Press and hold the button and button for 4 seconds or longer (simple settings mode).
2. “ALL” is displayed on the remote controller.
3. Next, press the UNIT button.
4. The address is displayed for 1 of the indoor units which is connected to the remote controller. Check that the fan of that indoor unit starts and that air is discharged.
5. Press the UNIT button again and check the address of each indoor unit in sequence.
6. Press the again to return to normal remote controller mode.

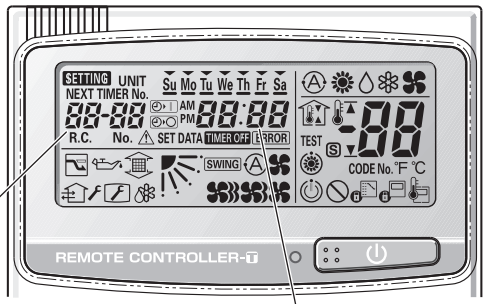

Indoor unit address

Number changes to indicate which indoor unit is currently selected.

5. Remote Controller Test Run Settings

1. Press the remote controller button for 4 seconds or longer. Then press the button.

- “ TEST ” appears on the LCD display while the test run is in progress.
- The temperature cannot be adjusted when in Test Run mode.
  (This mode places a heavy load on the machines. Therefore use it only when performing the test run.)

2. The test run can be performed using the HEAT, COOL, or FAN operation modes.
   Note: The outdoor units will not operate for approximately 3 minutes after the power is turned ON and after operation is stopped.
3. If correct operation is not possible, a code is displayed on the remote controller LCD display.
   (Refer to “Table of Self-Diagnostic Functions” and correct the problem.)
4. After the test run is completed, press the button again. Check that “ TEST ” disappears from the LCD display.
   (To prevent continuous test runs, this remote controller includes a timer function that cancels the test run after 60 minutes.)

* If the test run is performed using the wired remote controller, operation is possible even if the cassette-type ceiling panel has not been installed. (“P09” display does not occur.)

6. Caution for Pump Down

6. Caution for Pump Down

Pump down means refrigerant gas in the system is returned to the outdoor unit. Pump down is used when the unit is to be moved, or before servicing the refrigerant circuit.
(Refer to the Service Manual)

CAUTION

- **This outdoor unit cannot collect more than the rated refrigerant amount as shown by the nameplate on the back.**
- **If the amount of refrigerant is more than that recommended, do not conduct pump down. In this case use another refrigerant collecting system.**

7. Meaning of Alarm Messages

7. Meaning of Alarm Messages

Table of Self-Diagnostics Functions and Description of Alarm Displays

Alarm messages are indicated by the blinking of LED 1 and 2 on the outdoor unit PCB.
They are also displayed on the wired remote controller.

● Viewing the LED 1 and 2 alarm displays

LED 1	LED 2	Alarm contents
☼	☼	Alarm display LED 1 blinks M times, then LED 2 blinks N times. The cycle then repeats. M = 2: P alarm 3: H alarm 4: E alarm 5: F alarm 6: L alarm N = Alarm No. Example: LED 1 blinks 2 times, then LED 2 blinks 17 times. The cycle then repeats. Alarm is “P17.”
Alternating		

(☼: Blinking) Connect the outdoor maintenance remote controller to the RC socket on the outdoor main unit control PCB (3P, blue), and check the Alarm Messages on the remote controller display.

Possible cause of malfunction			Alarm message
Serial communication errors Mis-setting	Remote controller is detecting error signal from indoor unit.	Error in receiving serial communication signal. (Signal from main indoor unit in case of group control) Ex: Auto address is not completed.	<E01>
		Error in transmitting serial communication signal.	<E02>
	Indoor unit is detecting error signal from remote controller (and system controller).		<<E03>>
	Indoor unit is detecting error signal from main outdoor unit.	Error in receiving serial communication signal. When turning on the power supply, the number of connected indoor units does not correspond to the number set. (Except R.C. address is “0.”)	E04
		Error of the main outdoor unit in receiving serial communication signal from the indoor unit.	<E06>
	Improper setting of indoor unit or remote controller.	Indoor unit address setting is duplicated.	E08
		Remote controller address connector (RCU. ADR) is duplicated. (Duplication of main remote controller)	<<E09>>
	During auto address setting, number of connected units does not correspond to number set. When turning on the power supply, number of connected units does not correspond to number set. (Except R.C. address is “0.”)	Starting auto address setting is prohibited. This alarm message shows that the auto address connector CN30 is shorted while other RC line is executing auto address operation.	E12
		Error in auto address setting. (Number of connected indoor units is less than the number set.)	E15
		Error in auto address setting. (Number of connected indoor units is more than the number set.)	E16
		No indoor unit is connected during auto address setting.	E20
		Main outdoor unit is detecting error signal from sub outdoor unit.	E24
		Error of outdoor unit address setting.	E25
		The number of connected main and sub outdoor units do not correspond to the number set at main outdoor unit PCB.	E26
		Improper wiring between main outdoor unit and sub-unit.	E27
		Error of sub outdoor unit in receiving serial communication signal from main outdoor unit.	E29
		Serial transmission failure of outdoor unit.	E30
	Communications trouble between units	Communication failure with MDC	E31
	Indoor unit communication error of group control wiring.	Error of main indoor unit in receiving serial communication signal from sub indoor units.	E18
	Improper setting.	This alarm message shows when an indoor unit for multiple-use is not connected to the outdoor unit.	L02
		Duplication of main indoor unit address setting in group control.	<L03>
		Duplication of outdoor R.C. address setting.	L04
		There are 2 or more indoor unit controllers that have operation mode priority in refrigerant circuit. — Priority set remote controller	L05
		There are 2 or more indoor unit controllers that have operation mode priority in refrigerant circuit. — Non-priority set remote controller	L06
		Group control wiring is connected to individual control indoor unit.	L07
		Indoor unit address is not set.	L08
		Capacity code of indoor unit is not set.	<<L09>>
		Capacity code of outdoor unit is not set.	L10
		Mis-matched connection of outdoor units that have different kinds of refrigerant.	L17
		4-way valve operation failure	L18

Continued

7. Meaning of Alarm Messages

Possible cause of malfunction			Alarm message
Activation of protective device	Protective device in indoor unit is activated.	Thermal protector in indoor unit fan motor is activated.	<<P01>>
		Improper wiring connections of ceiling panel.	<<P09>>
		Float switch is activated.	<<P10>>
		Operation of protective function of fan inverter.	P12
Activation of protective device	Protective device in outdoor unit is activated.	Compressor thermal protector is activated. Power supply voltage is unusual. (The voltage is more than 260 V or less than 160 V between L and N phase.)	P02
		Incorrect discharge temperature. (Comp. No. 1)	P03
		High pressure switch is activated.	P04
		Negative (defective) phase.	P05
		O_2 sensor (detects low oxygen level) activated	P14
		DCCT overcurrent or ACCT overcurrent	P16
		Incorrect discharge temperature. (Comp. No. 2)	P17
		Compressor 3 discharge temp. failure	P18
		High load alarm	P20
		Outdoor unit fan motor is unusual.	P22
		IPM trip (IPM current or temperature)	H31
		Inverter for compressor is unusual. (DC compressor does not operate.)	P29
Thermistor fault	Indoor thermistor is either open or damaged.	Indoor coil temp. sensor (E1)	<<F01>>
		Indoor coil temp. sensor (E2)	<<F02>>
		Indoor coil temp. sensor (E3)	<<F03>>
		Indoor suction air (room) temp. sensor (TA)	<<F10>>
		Indoor discharge air temp. sensor (BL)	<<F11>>
	Outdoor thermistor is either open or damaged.	Comp. No. 1 discharge gas temp. sensor (DISCH1)	F04
		Comp. No. 2 discharge gas temp. sensor (DISCH2)	F05
		Outdoor No. 1 coil gas temp. sensor (EXG1)	F06
		Outdoor No. 1 coil liquid temp. sensor (EXL1)	F07
		Outdoor air temp. sensor (AIR TEMP)	F08
		Compressor intake port temperature sensor (RDT)	F12
		Temp. sensor (SCG) at refrigerant gas outlet of dual-tube	F14
		High pressure sensor. Negative (defective) N phase. The gas or liquid or both service valves are close.	F16
		Low-pressure sensor failure	F17
		Compressor 3 discharge temp. sensor failure (DISCH3)	F22
		Outdoor No. 2 coil gas temp. sensor (EXG2)	F23
		Outdoor No. 2 coil liquid temp. sensor (EXL2)	F24
EEPROM on indoor unit PCB failure			F29
Protective device for compressor is activated	Protective device for compressor No. 1 is activated.	EEPROM on the main or sub outdoor unit PCB has failed.	F31
		Current is not detected when comp. No. 1 is ON.	H03
	Protective device for compressor No. 2 is activated.	Compressor No. 2 current trouble (overcurrent)	H11
		Compressor No. 2 current trouble (locked)	H12
		Compressor No. 2 CT sensor disconnected or short circuit	H13
		Compressor No. 2 discharge temp. sensor disconnected	H15
	Protective device for compressor No. 3 is activated.	Compressor No. 3 current trouble (overcurrent)	H21
		Compressor No. 3 current trouble (locked)	H22
		Compressor No. 3 CT sensor disconnected or short circuit	H23
		Compressor No. 3 discharge temp. sensor disconnected	H25
		Low pressure switch is activated.	H06
	Oil sensor fault. (Disconnection, etc.)	Comp. No. 1 oil sensor	H08
		Comp. No. 2 oil sensor	H27
		Oil sensor (connection) failure	H28

Continued

7. Meaning of Alarm Messages

Alarm messages displayed on system controller			
Serial communication errors Mis-setting	Error in transmitting serial communication signal	Indoor or main outdoor unit is not operating correctly. Mis-wiring of control wiring between indoor unit, main outdoor unit and system controller.	C05
	Error in receiving serial communication signal	Indoor or main outdoor unit is not operating correctly. Mis-wiring of control wiring between indoor unit, main outdoor unit and system controller. CN76 is not connected properly.	C06
Activation of protective device	Protective device of sub indoor unit in group control is activated.	When using wireless remote controller or system controller, in order to check the alarm message in detail, connect wired remote controller to indoor unit temporarily.	P30

NOTE

1. Alarm messages in << >> do not affect other indoor unit operations.
2. Alarm messages in < > sometimes affect other indoor unit operations depending on the fault.

– MEMO –

Contents

6. ELECTRICAL DATA

1. Outdoor Unit 6-2
(1) Electric Wiring Diagram U-8ME1E81, U-10ME1E81 6-2
(2) Electric Wiring Diagram U-12ME1E81, U-14ME1E81, U-16ME1E81 6-4
(3) Electric Wiring Diagram U-18ME1E81, U-20ME1E81 6-6
2. Indoor Unit 6-8
(1)-1 S-22MU1E51/28MU1E51/36MU1E51/45MU1E51/56MU1E51/60MU1E51/ 73MU1E51/90MU1E51/106MU1E51/140MU1E51/160MU1E51 6-8
(1)-2 S-22MU1E5/28MU1E5/36MU1E5/45MU1E5/56MU1E5/73MU1E5 6-9
(1)-3 S-106MU1E5/140MU1E5/160MU1E5 6-11
(2)-1 S-22MY1E5/28MY1E5/36MY1E5/45MY1E5/56MY1E5 6-13
(2)-2 S-22MY2E5/28MY2E5/36MY2E5/45MY2E5/56MY2E5 6-14
(3) S-22ML1E5/28ML1E5/36ML1E5/45ML1E5/56ML1E5/73ML1E5 6-15
(4) S-28MD1E5/36MD1E5/45MD1E5/56MD1E5/73MD1E5 6-17
(5)-1 S-22MK1E5/28MK1E5/36MK1E5 6-19
(5)-2 S-45MK1E5/56MK1E5/73MK1E5/106MK1E5 6-20
(5)-3 S-22MK2E5/28MK2E5/36MK2E5 6-21
(6) S-36MT1E5/45MT1E5/56MT1E5/73MT1E5/106MT1E5/140MT1E5 6-22
(7) S-22MF2E5/28MF2E5/36MF2E5/45MF2E5/56MF2E5/60MF2E5/ 73MF2E5/90MF2E5/106MF2E5/140MF2E5/160MF2E5 6-24
(8) S-22MF1E5/28MF1E5/36MF1E5/45MF1E5/56MF1E5/ 73MF1E5/90MF1E5/106MF1E5/140MF1E5/160MF1E5 6-25
(9) S-15MM1E5/22MM1E5/28MM1E5/36MM1E5/45MM1E5/56MM1E5 6-27
(10)-1 S-73ME1E5 6-29
(10)-2 S-106ME1E5 6-31
(10)-3 S-140ME1E5 6-33
(10)-4 S-224ME1E5 6-35
(10)-5 S-280ME1E5 6-37
(10)-6 S-224ME1E5A 6-39
(11) S-22MP1E5/28MP1E5/36MP1E5/45MP1E5/56MP1E5/71MP1E5 6-41
(12) S-22MR1E5/28MR1E5/36MR1E5/45MR1E5/56MR1E5/71MR1E5 6-43

1. Outdoor Unit

(1) Electric Wiring Diagram U-8ME1E81, U-10ME1E81

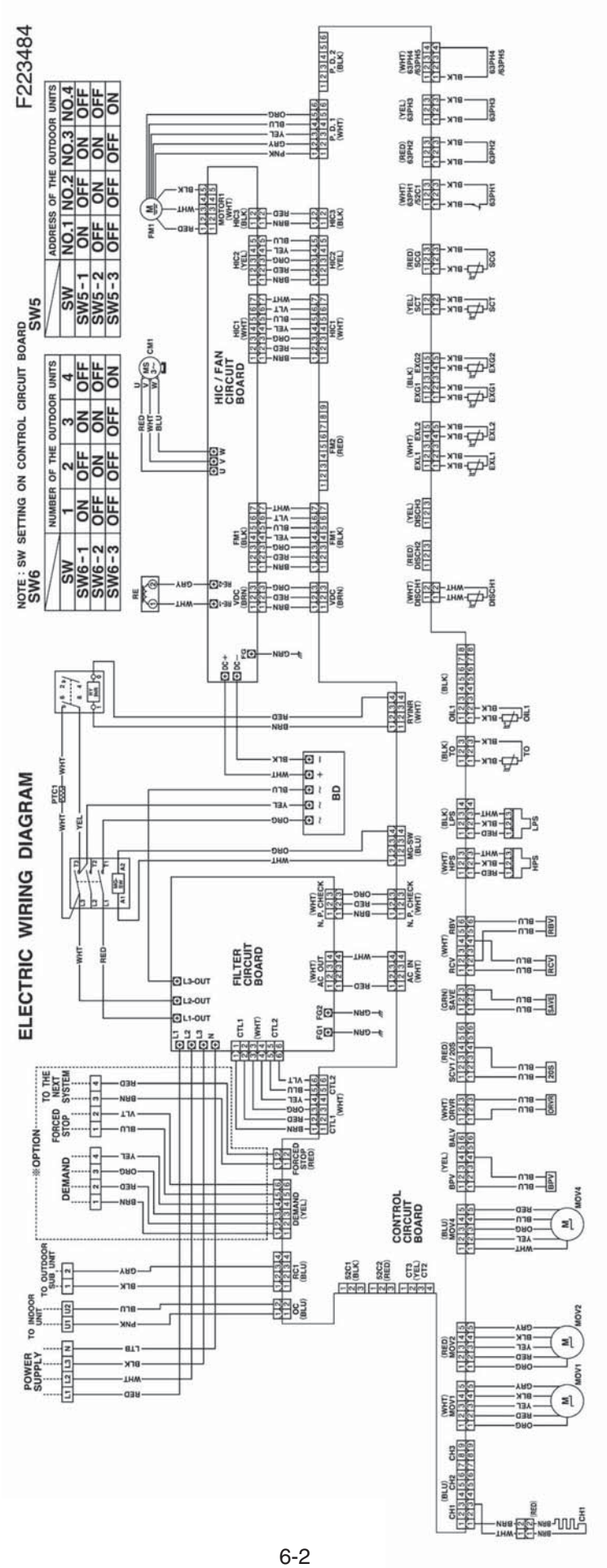

1. Outdoor Unit

Schematic Diagram U-8ME1E81, U-10ME1E81

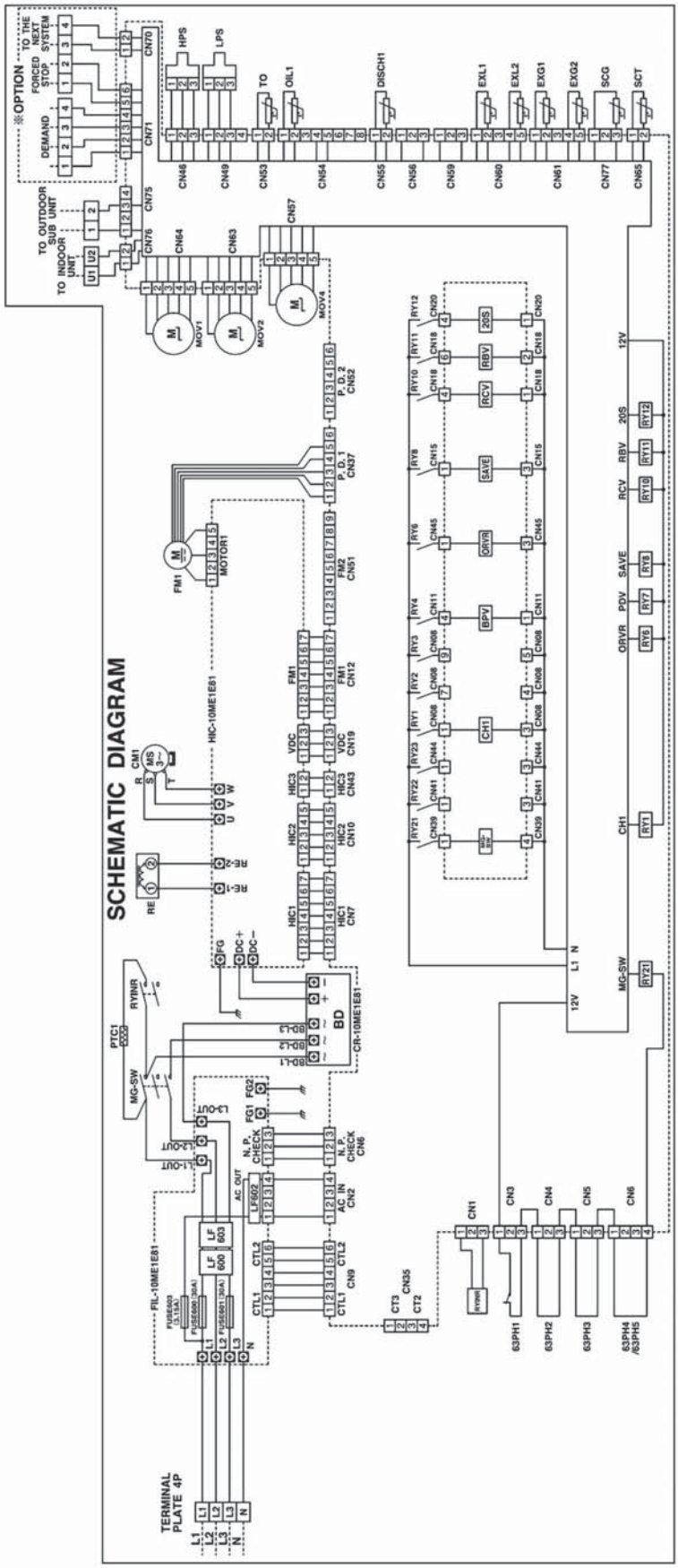

SYMBOLS	DESCRIPTION	SYMBOLS	DESCRIPTION	SYMBOLS	DESCRIPTION	SYMBOLS	DESCRIPTION
CM1	COMPRESSOR MOTOR	SAVE	SAVE VALVE	CH1	CRANK CASE HEATER	FIL-10ME1E81	FILTER CIRCUIT BOARD
FM1	OUTDOOR FAN MOTOR	RCV, RBV	REFRIGERANT CONTROL VALVE	63PH1	HIGH PRESSURE SWITCH	HIC-10ME1E81	HIC / FAN CIRCUIT BOARD
MG-SW	MAGNETIC CONTACTOR	20S	FOUR WAY VALVE	RE	REACTOR		THERMISTOR
RYINR	MAGNETIC CONTACTOR	MOV1, 2, 4	MOTOR OPERATED VALVE	PTC1	PTC THERMISTOR		CONNECTOR
BPV	BYPASS VALVE	FUSE600, 601, 603	OPERATION CIRCUIT FUSE	RY001~004, 006, 008			TERMINAL
ORVR	OIL RECOVERY VALVE	LF600, 602, 603	NOISE FILTER (ON THE P.C.B.)	010~012, 021~023	RELAY		TERMINAL PLATE
PDV	PUMP DOWN VALVE	BD	BRIDGE DIODE	CR-10ME1E81	CONTROL CIRCUIT BOARD		

OUTDOOR PC UNIT HEATING & COOLING

⚠ WARNING DANGER! HIGH VOLTAGE. DO NOT TOUCH ANY ELECTRIC COMPONENT WHILE OPERATING OR 5 MINUTES AFTER STOPPING OPERATION. MEASURE THE POWER VOLTAGE OF BD'S TERMINAL "VDC+" (WHT) AND "VDC−" (BLK) WITH THE TESTER.

6

1. Outdoor Unit

(2) Electric Wiring Diagram U-12ME1E81, U-14ME1E81, U-16ME1E81

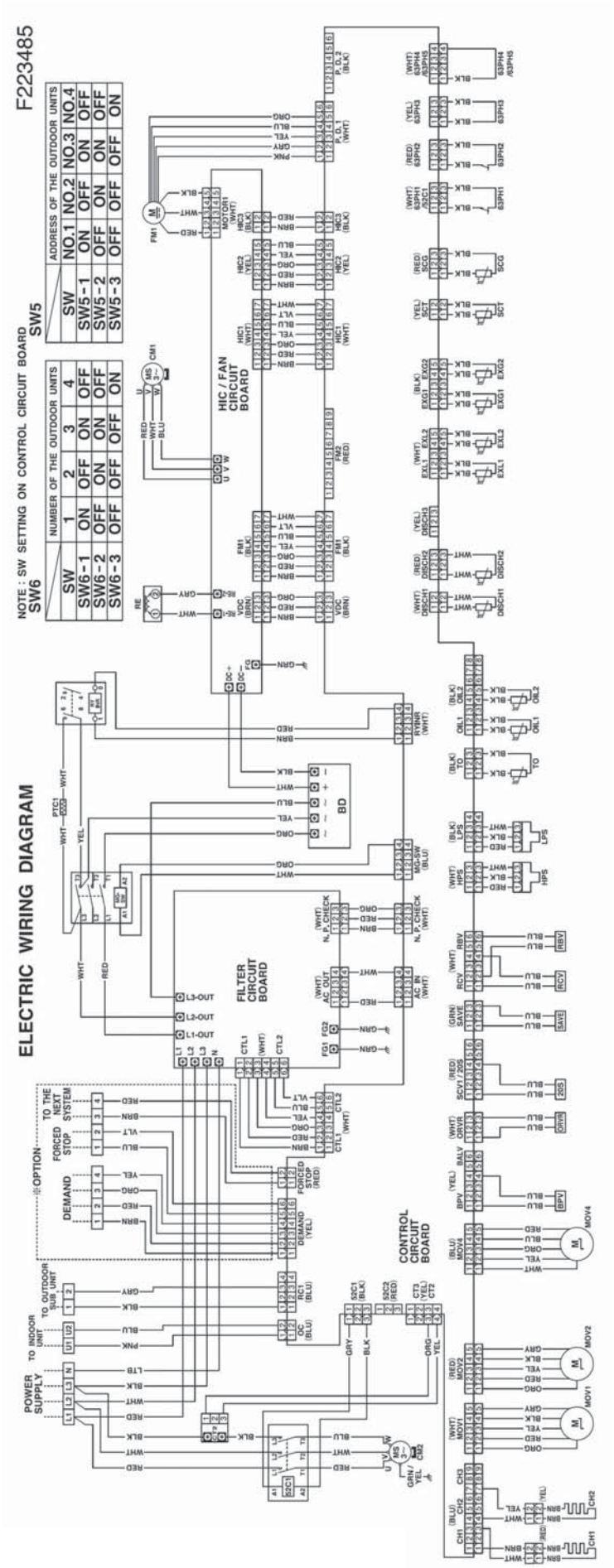

1. Outdoor Unit

Schematic Diagram U-12ME1E81, U-14ME1E81, U-16ME1E81

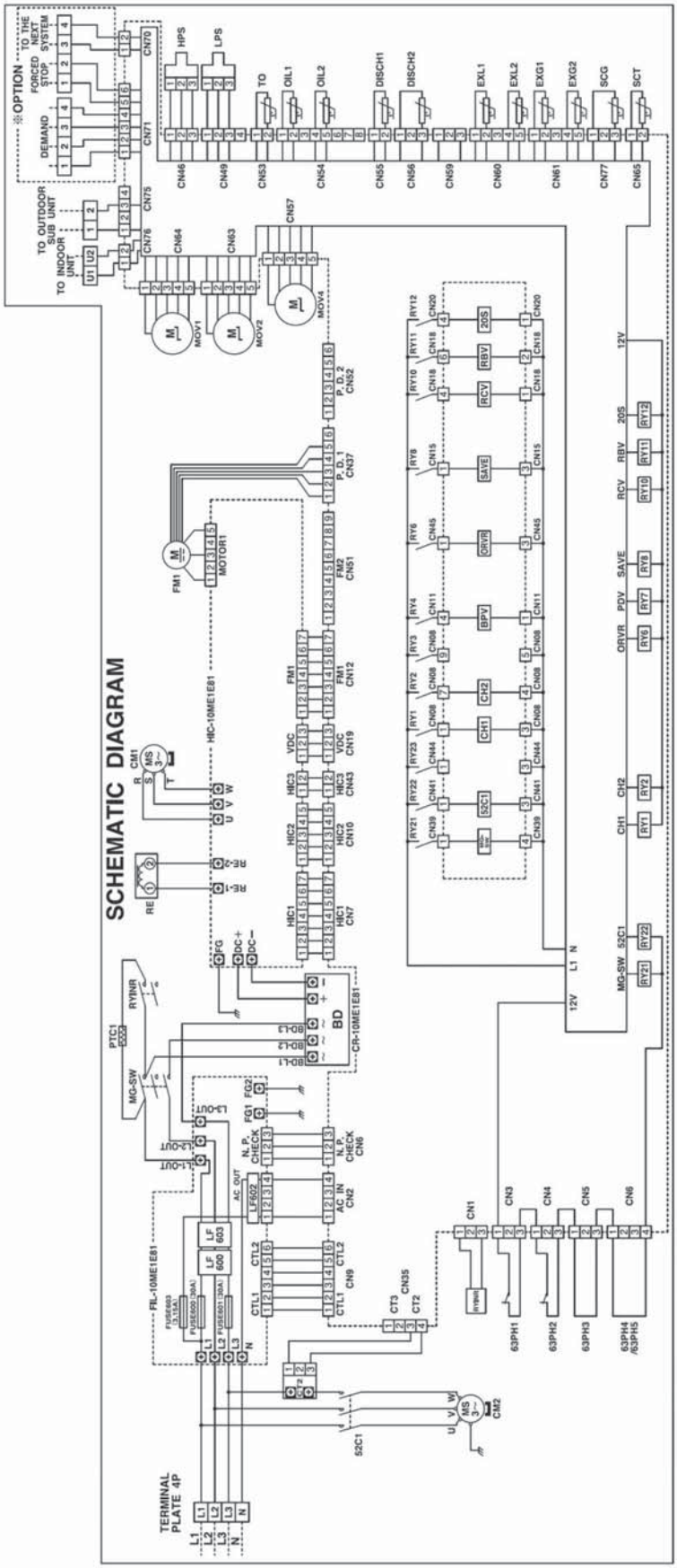

SYMBOLS	DESCRIPTION
CM1, 2	COMPRESSOR MOTOR
FM1	OUTDOOR FAN MOTOR
MG-SW	MAGNETIC CONTACTOR
RYINR	MAGNETIC CONTACTOR
BPV	BYPASS VALVE
ORVR	OIL RECOVERY VALVE
PDV	PUMP DOWN VALVE
SAVE	SAVE VALVE

SYMBOLS	DESCRIPTION
RCV, RBV	REFRIGERANT CONTROL VALVE
20S	FOUR WAY VALVE
52C1	COMPRESSOR MOTOR MAGNETIC CONTACTOR
MOV1, 2, 4	MOTOR OPERATED VALVE
FUSE600, 601, 603	OPERATION CIRCUIT FUSE
LF600, 602, 603	NOISE FILTER (ON THE P.C.B.)
BD	BRIDGE DIODE
CH1, 2	CRANK CASE HEATER

SYMBOLS	DESCRIPTION
63PH1, 2	HIGH PRESSURE SWITCH
RE	REACTOR
PTC1	PTC THERMISTOR
CT2	CURRENT TRANSFORMER
RY001~004, 006, 008 010~012, 021~023	RELAY
CR-10ME1E81	CONTROL CIRCUIT BOARD
FIL-10ME1E81	FILTER CIRCUIT BOARD

SYMBOLS	DESCRIPTION
HIC-10ME1E81	HIC / FAN CIRCUIT BOARD
	THERMISTOR
	CONNECTOR
	TERMINAL
	TERMINAL PLATE

OUTDOOR PC UNIT HEATING & COOLING

⚠ WARNING DANGER! HIGH VOLTAGE. DO NOT TOUCH ANY ELECTRIC COMPONENT WHILE OPERATING OR 5 MINUTES AFTER STOPPING OPERATION. MEASURE THE POWER VOLTAGE OF BD'S TERMINAL "VDC+" (WHT) AND "VDC−" (BLK) WITH THE TESTER.

1. Outdoor Unit

(3) Electric Wiring Diagram U-18ME1E81, U-20ME1E81

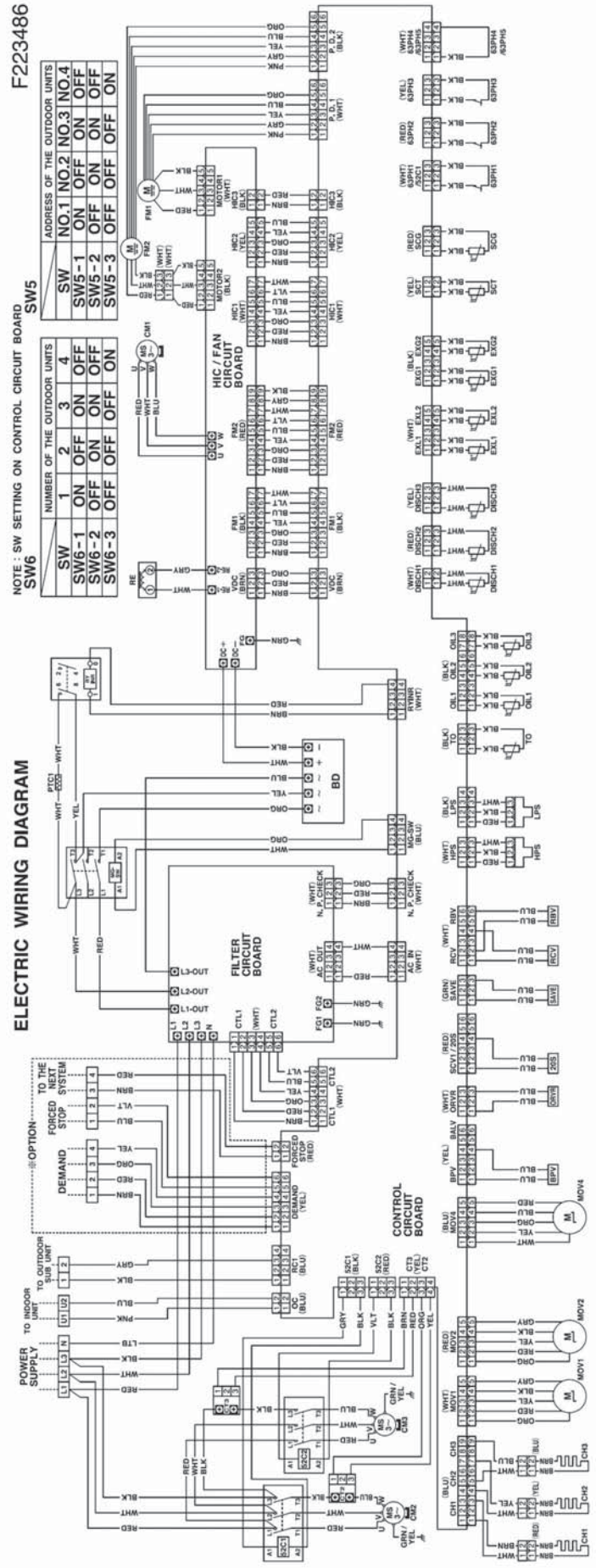

1. Outdoor Unit

Schematic Diagram U-18ME1E81, U-20ME1E81

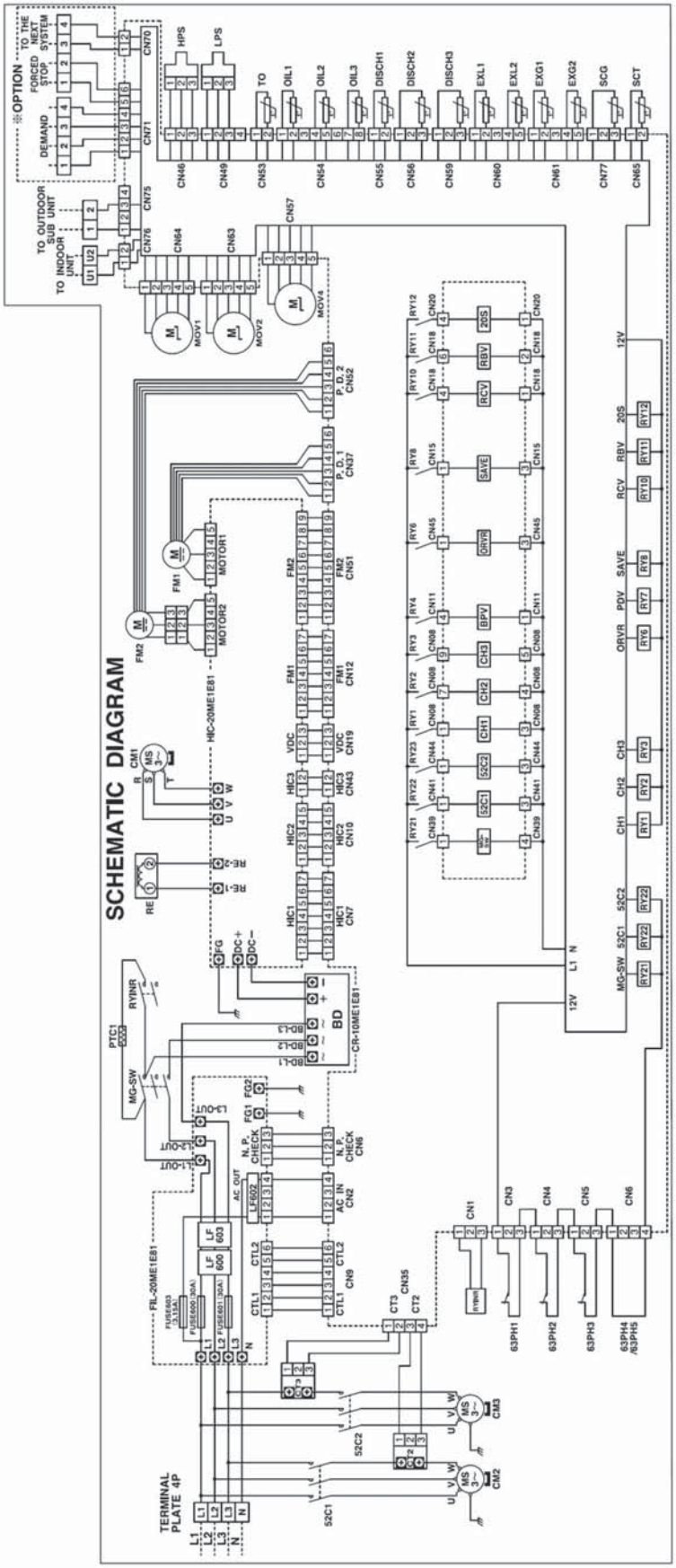

SYMBOLS	DESCRIPTION	SYMBOLS	DESCRIPTION	SYMBOLS	DESCRIPTION	SYMBOLS	DESCRIPTION
CM1, 2, 3	COMPRESSOR MOTOR	RCV, RBV	REFRIGERANT CONTROL VALVE	63PH1, 2, 3	HIGH PRESSURE SWITCH	HIC-20ME1E81	HIC / FAN CIRCUIT BOARD
FM1, 2	OUTDOOR FAN MOTOR	20S	FOUR WAY VALVE	RE	REACTOR		THERMISTOR
MG-SW	MAGNETIC CONTACTOR	52C1, 2	COMPRESSOR MOTOR MAGNETIC CONTACTOR	PTC1	PTC THERMISTOR		CONNECTOR
RYINR	MAGNETIC CONTACTOR	MOV1, 2, 4	MOTOR OPERATED VALVE	CT2, 3	CURRENT TRANSFORMER		TERMINAL
BPV	BYPASS VALVE	FUSE600, 601, 603	OPERATION CIRCUIT FUSE	RY001~004, 006, 008	RELAY		TERMINAL PLATE
ORVR	OIL RECOVERY VALVE	LF600, 602, 603	NOISE FILTER (ON THE P.C.B.)	010~012, 021~023			
PDV	PUMP DOWN VALVE	BD	BRIDGE DIODE	CR-10ME1E81	CONTROL CIRCUIT BOARD		
SAVE	SAVE VALVE	CH1, 2, 3	CRANK CASE HEATER	FIL-20ME1E81	FILTER CIRCUIT BOARD		

OUTDOOR PC UNIT HEATING & COOLING

⚠ WARNING DANGER! HIGH VOLTAGE. DO NOT TOUCH ANY ELECTRIC COMPONENT WHILE OPERATING OR 5 MINUTES AFTER STOPPING OPERATION. MEASURE THE POWER VOLTAGE OF BD'S TERMINAL "VDC+" (WHT) AND "VDC−" (BLK) WITH THE TESTER.

2. Indoor Unit

(1)-1 Electric Wiring Diagram S-22MU1E51/28MU1E51/36MU1E51/45MU1E51/56MU1E51/ 60MU1E51/73MU1E51/90MU1E51/106MU1E51/140MU1E51/160MU1E51

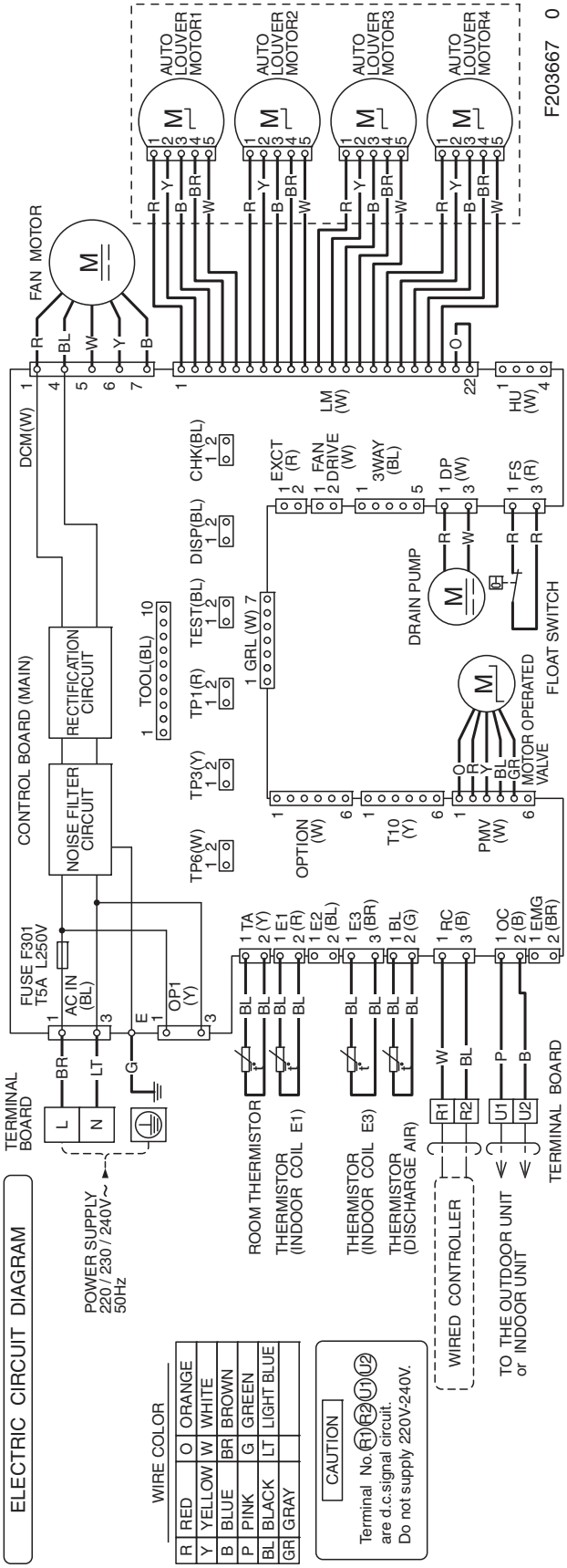

2. Indoor Unit

(1)-2 Electric Wiring Diagram S-22MU1E5/28MU1E5/36MU1E5/45MU1E5/56MU1E5/73MU1E5

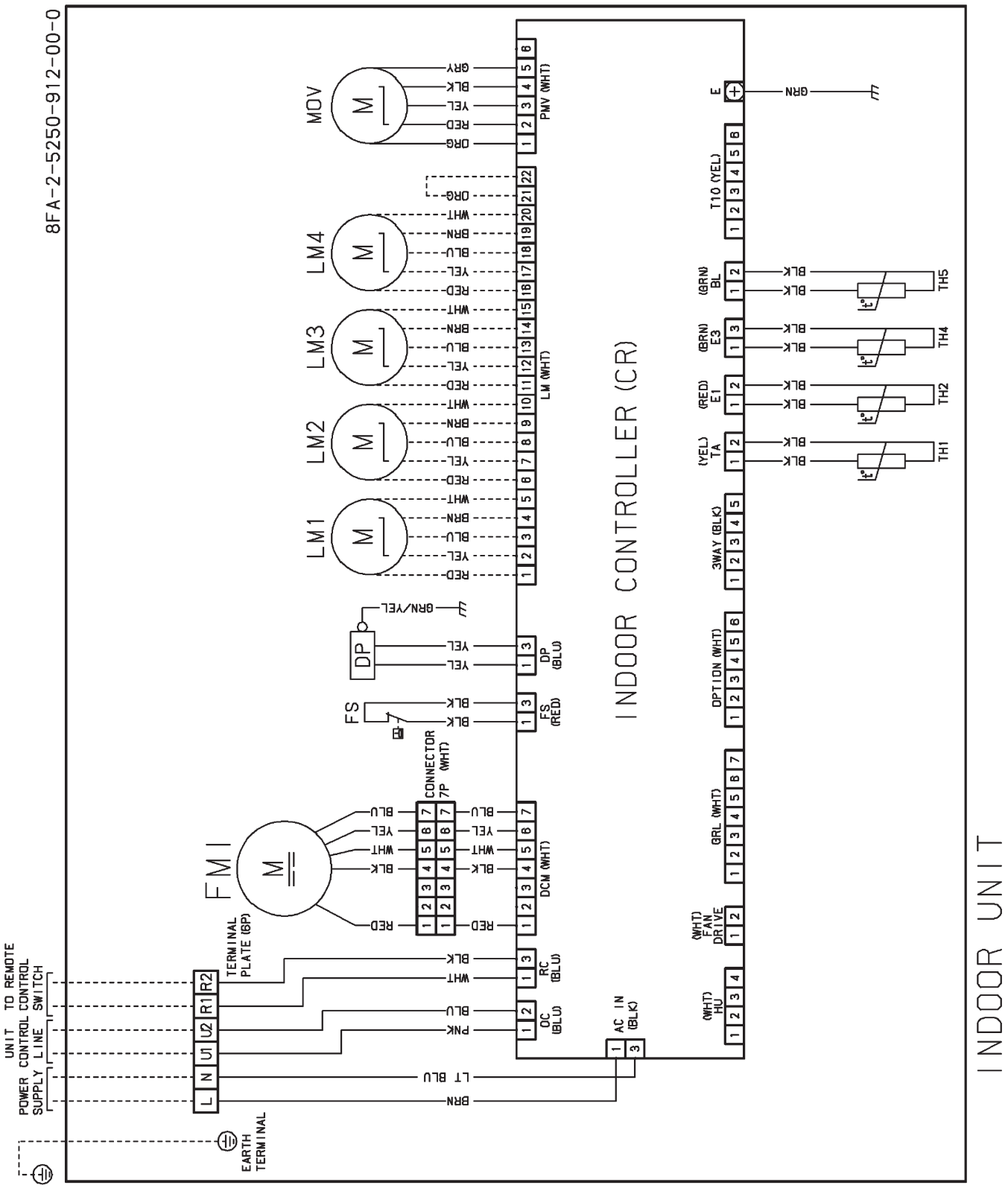

2. Indoor Unit

Schematic Diagram S-22MU1E5/28MU1E5/36MU1E5/45MU1E5/56MU1E5/73MU1E5

8FA-2-5250-912-00-0

SYMBOLS	DESCRIPTION
FMI	INDOOR FAN MOTOR
DP	DRAIN PUMP
FS	FLOAT SWITCH
TH1	ROOM THERMISTOR
TH2	THERMISTOR (INDOOR COIL E1)
TH4	THERMISTOR (INDOOR COIL E3)
TH5	THERMISTOR (DISCHARGE AIR)
F301	FUSE
MOV	MOTOR OPERATED VALVE
CR	INDOOR CONTROLLER
(LM1~4)	AUTO LOUVER MOTOR (OPTION)
RY302	AUXILIARY RELAY
(RCS)	REMOTE CONTROL SWITCH (OPTION) TH:ROOM THERMISTOR
□	CONNECTOR , TERMINAL PLATE
⊕	TERMINAL

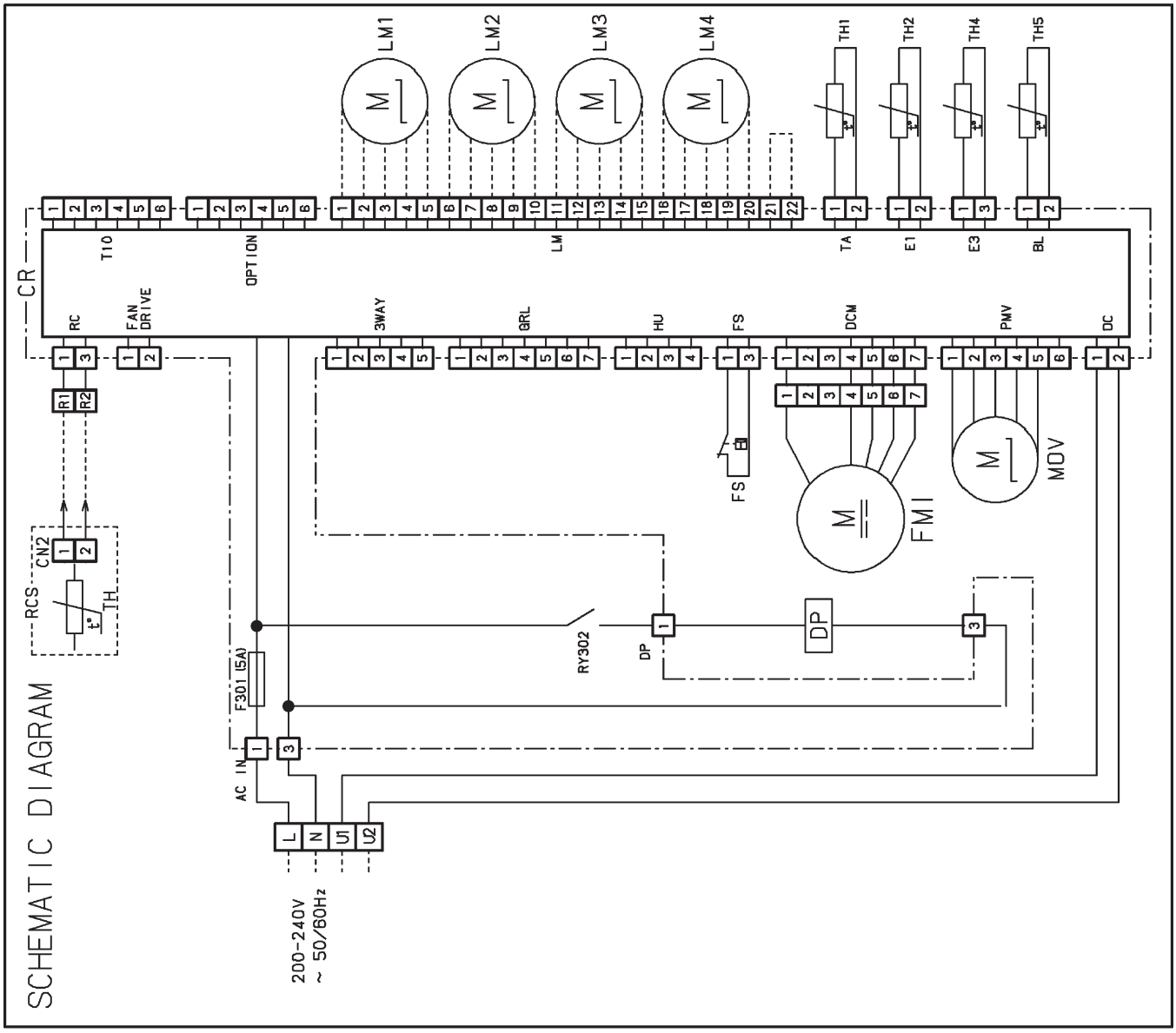

2. Indoor Unit

(1)-3 Electric Wiring Diagram S-106MU1E5/140MU1E5/160MU1E5

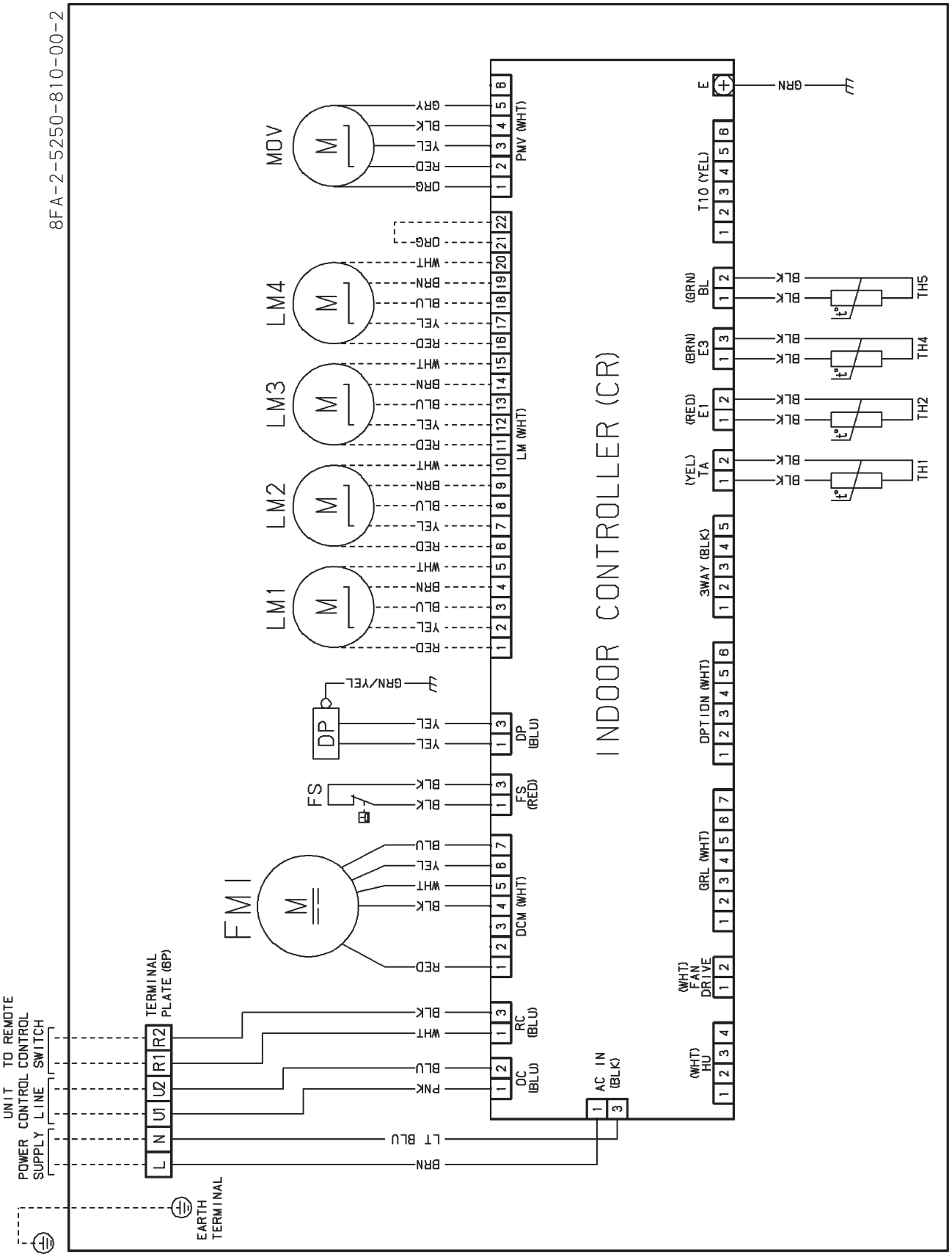

6

2. Indoor Unit

Schematic Diagram S-106MU1E5/140MU1E5/160MU1E5

8FA-2-5250-810-00-2

SYMBOLS	DESCRIPTION
FMI	INDOOR FAN MOTOR
DP	DRAIN PUMP
FS	FLOAT SWITCH
TH1	ROOM THERMISTOR
TH2	THERMISTOR (INDOOR COIL E1)
TH4	THERMISTOR (INDOOR COIL E3)
TH5	THERMISTOR (DISCHARGE AIR)
F301	FUSE
MOV	MOTOR OPERATED VALVE
CR	INDOOR CONTROLLER
(LM1~4)	AUTO LOUVER MOTOR (OPTION)
RY302	AUXILIARY RELAY
(RCS)	REMOTE CONTROL SWITCH (OPTION) TH:ROOM THERMISTOR
□	CONNECTOR , TERMINAL PLATE
⊕	TERMINAL

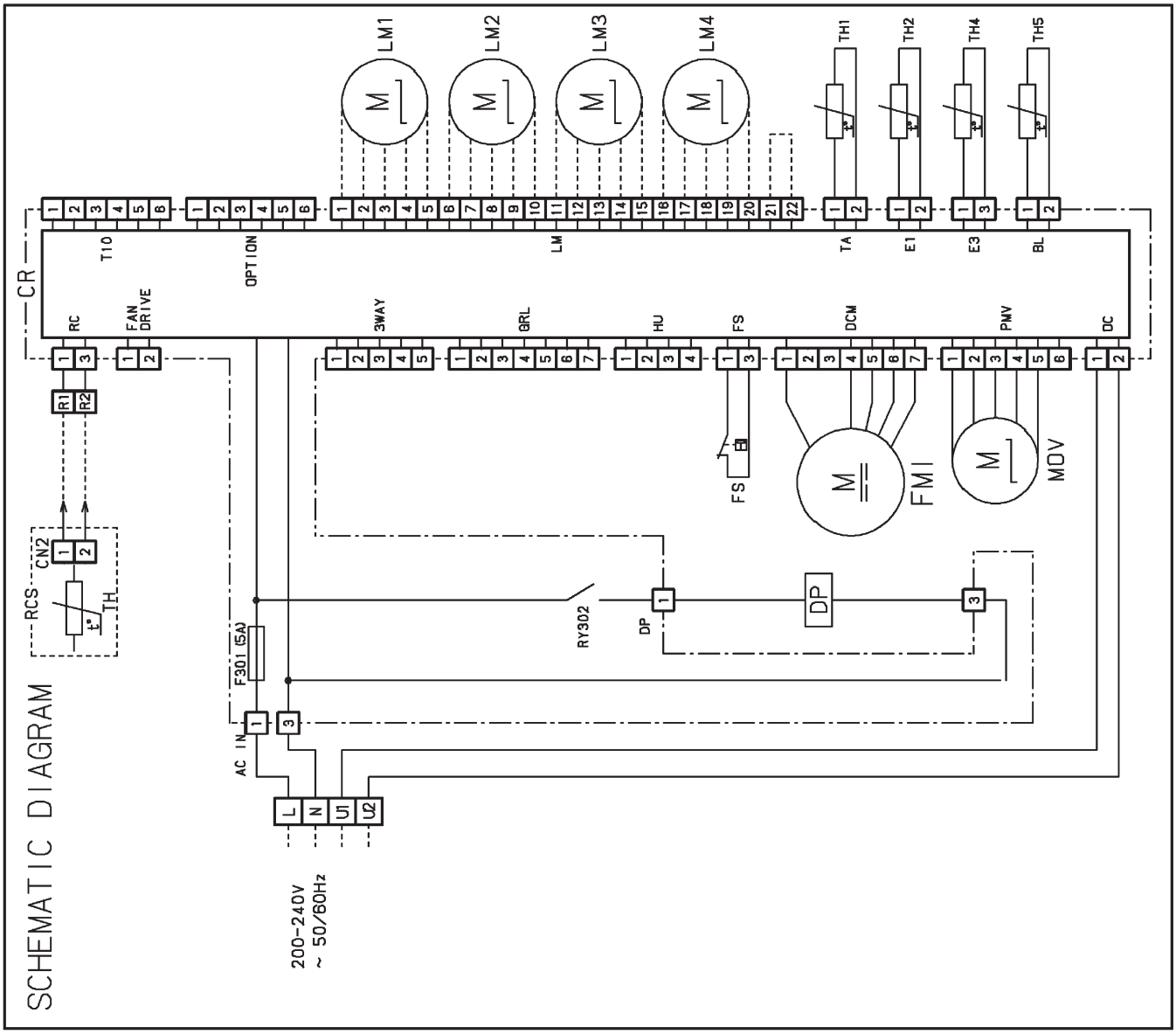

2. Indoor Unit

(2)-1 Electric Wiring Diagram S-22MY1E5/28MY1E5/36MY1E5/45MY1E5/56MY1E5

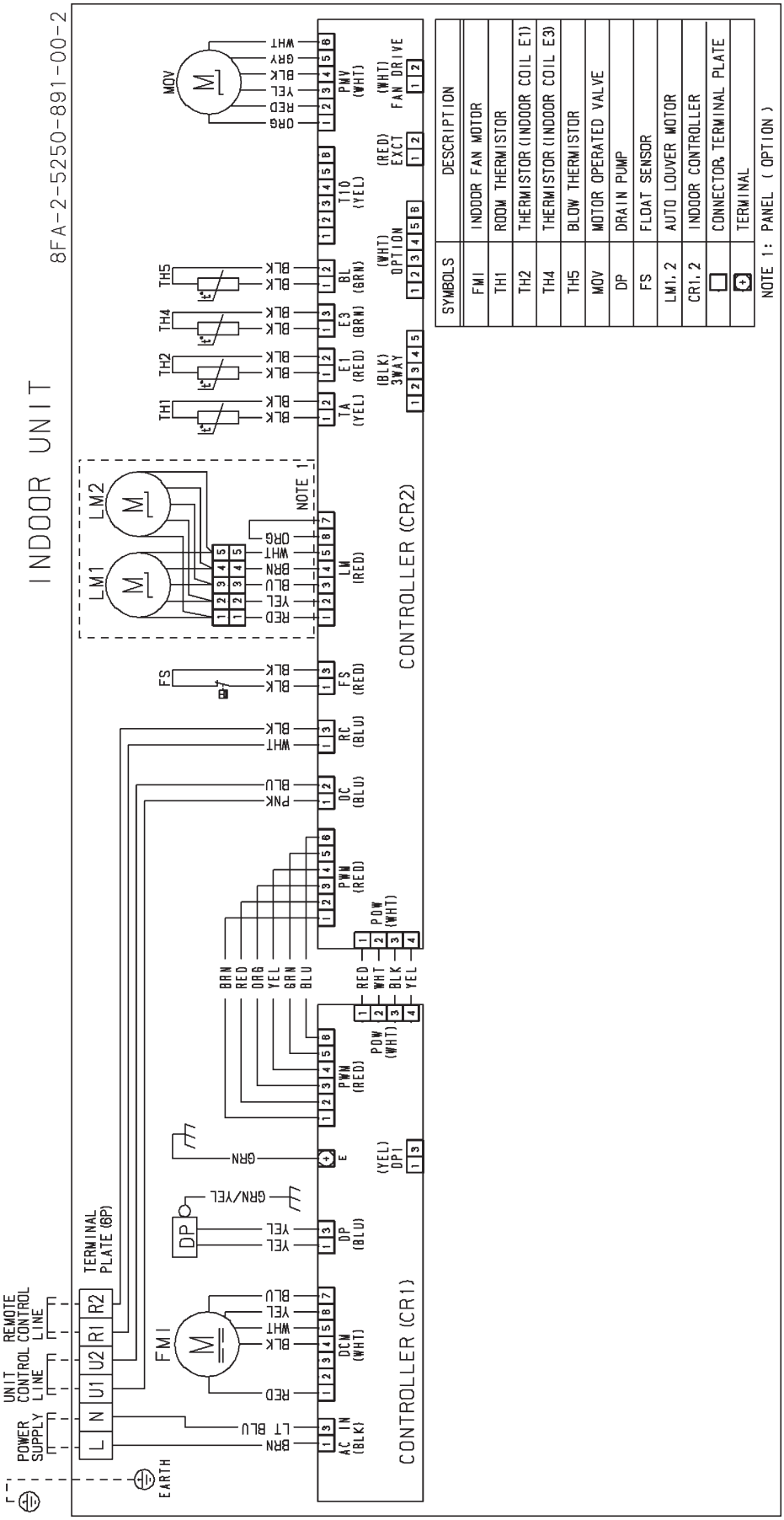

2. Indoor Unit

(2)-2 Electric Wiring Diagram S-22MY2E5/28MY2E5/36MY2E5/45MY2E5/56MY2E5

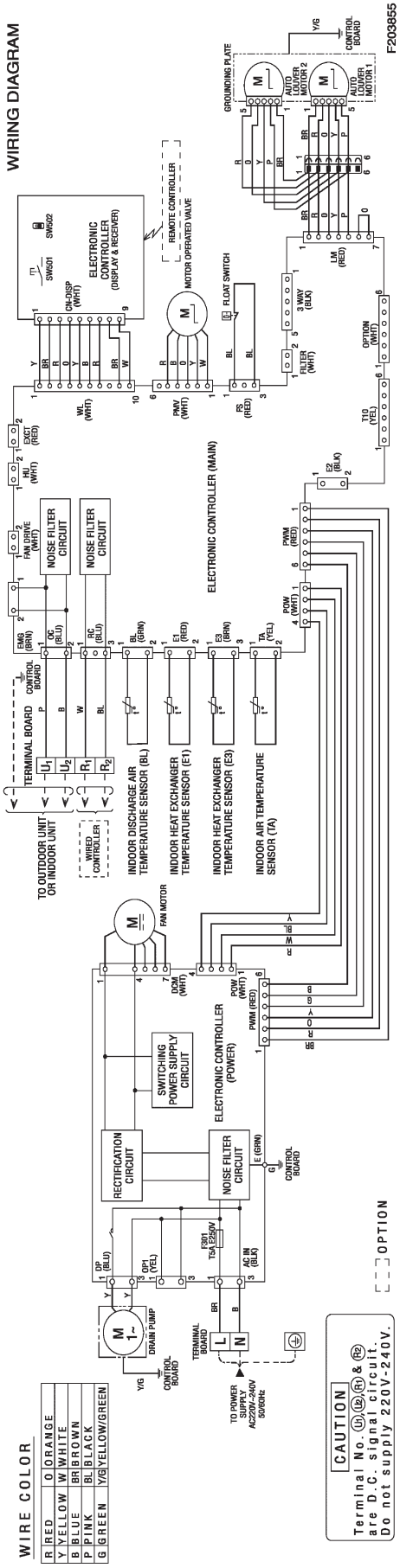

2. Indoor Unit

(3) Electric Wiring Diagram S-22ML1E5/28ML1E5/36ML1E5/45ML1E5/56ML1E5/73ML1E5

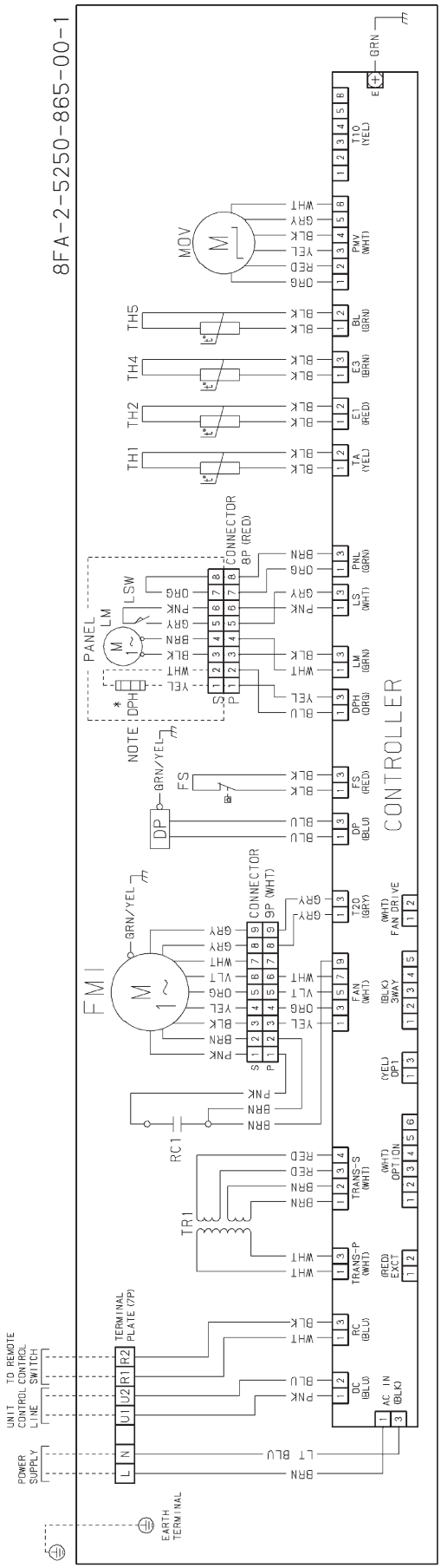

2. Indoor Unit

Schematic Diagram S-22ML1E5/28ML1E5/36ML1E5/45ML1E5/56ML1E5/73ML1E5

8FA-2-5250-865-00-1

SYMBOLS	DESCRIPTION
FMI	INDOOR FAN MOTOR
MOV	MOTOR OPERATED VALVE
49FI	INDOOR MOTOR THERMAL PROTECTOR
RC1	RUNNING CAPACITOR
TR1	POWER TRANSFORMER
DP	DRAIN PUMP
FS	FLOAT SWITCH
TH1	ROOM THERMISTOR
TH2	THERMISTOR(INDOOR COIL E1)
TH4	THERMISTOR(INDOOR COIL E3)
TH5	THERMISTOR(DISCHARGE AIR)
F1	FUSE
1X~3X	AUXILIARY RELAY
RY1, 2	
CR	INDOOR CONTROLLER
(PANEL)	*DPH:DEW PROOF HEATER (OPTION) LSW:LIMIT SWITCH (OPTION) LM:AUTO LOUVER MOTOR (OPTION)
(RCS)	REMOTE CONTROL SWITCH (OPTION) TH:ROOM THERMISTOR
□	CONNECTOR, TERMINAL PLATE
⊕	TERMINAL

NOTE:DEW PROOF HEATER (DPH) IS PROVIDED ONLY IN THE MODEL 73ML1E5.

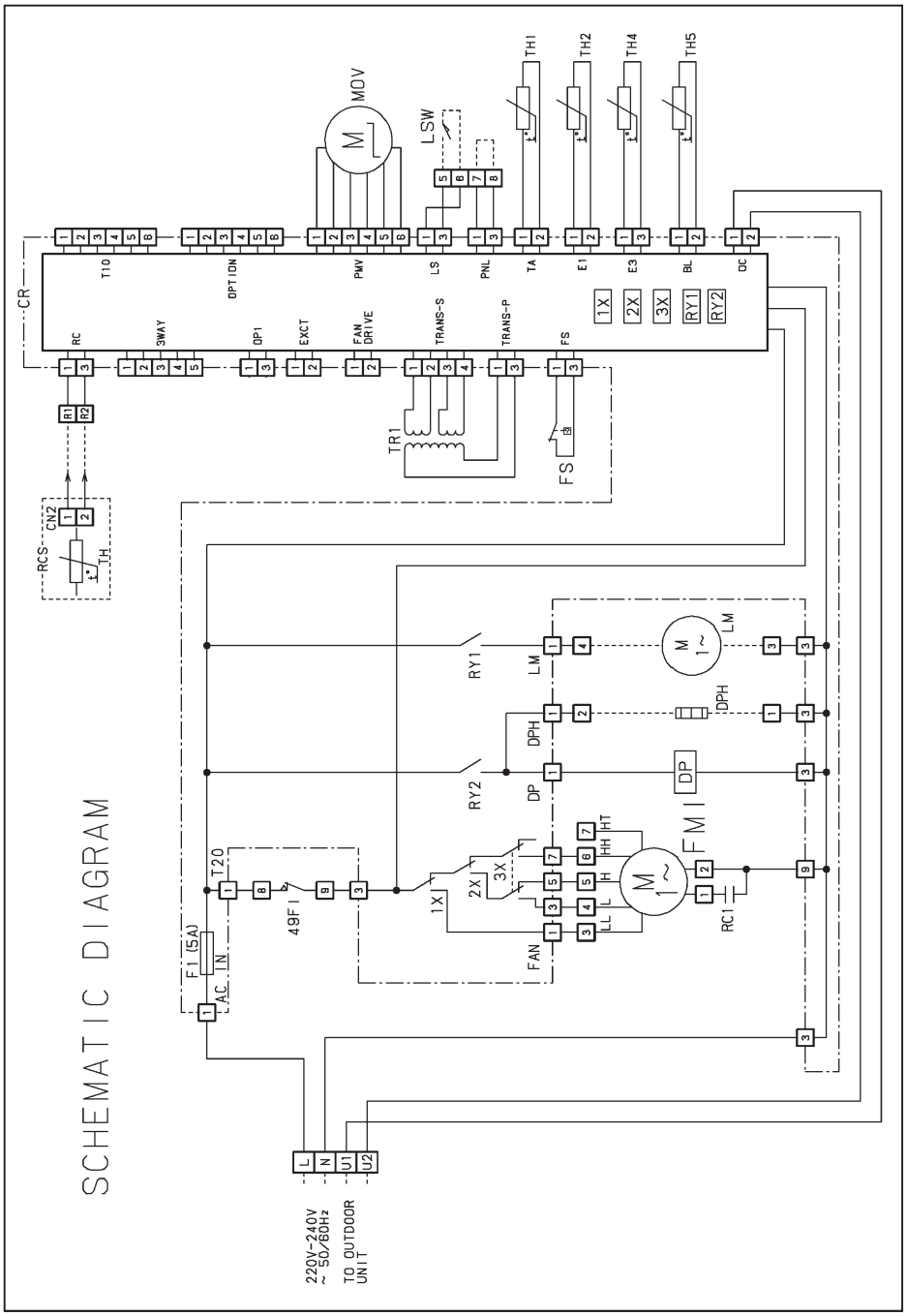

2. Indoor Unit

(4) Electric Wiring Diagram S-28MD1E5/36MD1E5/45MD1E5/56MD1E5/73MD1E5

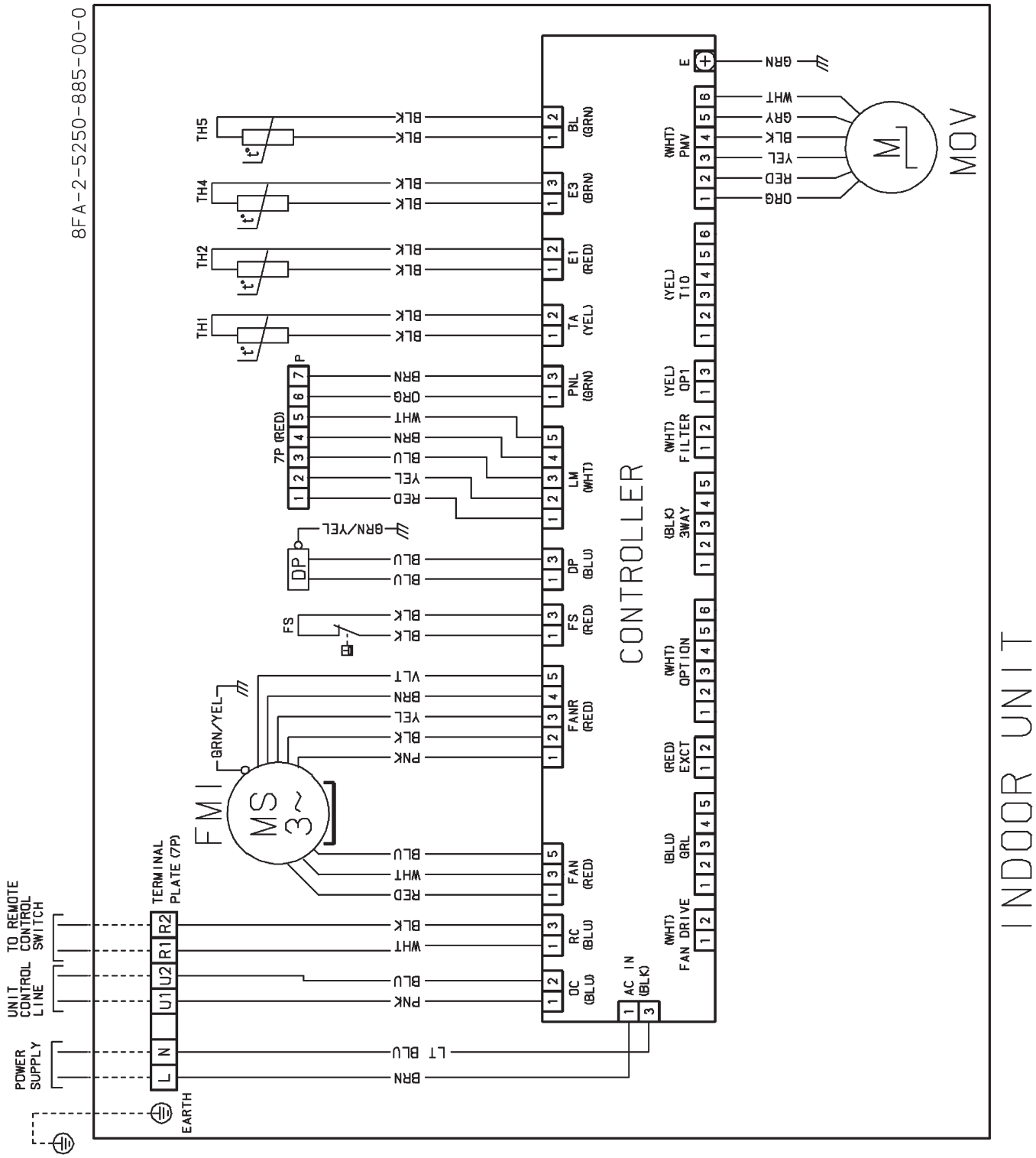

2. Indoor Unit

Schematic Diagram S-28MD1E5/36MD1E5/45MD1E5/56MD1E5/73MD1E5

8FA-2-5250-885-00-0

SYMBOLS	DESCRIPTION
FMI	INDOOR FAN MOTOR
TH1	ROOM THERMISTOR
TH2	THERMISTOR (INDOOR COIL E1)
TH4	THERMISTOR (INDOOR COIL E3)
TH5	THERMISTOR (DISCHARGE AIR)
F301	FUSE
MOV	MOTOR OPERATED VALVE
CR	INDOOR CONTROLLER
LM	AUTO LOUVER MOTOR
RY302	AUXILIARY RELAY
DP	DRAIN PUMP
FS	FLOAT SWITCH
(RCS)	REMOTE CONTROL SWITCH (OPTION) TH:ROOM THERMISTOR
□	CONNECTOR, TERMINAL PLATE
⊕	TERMINAL

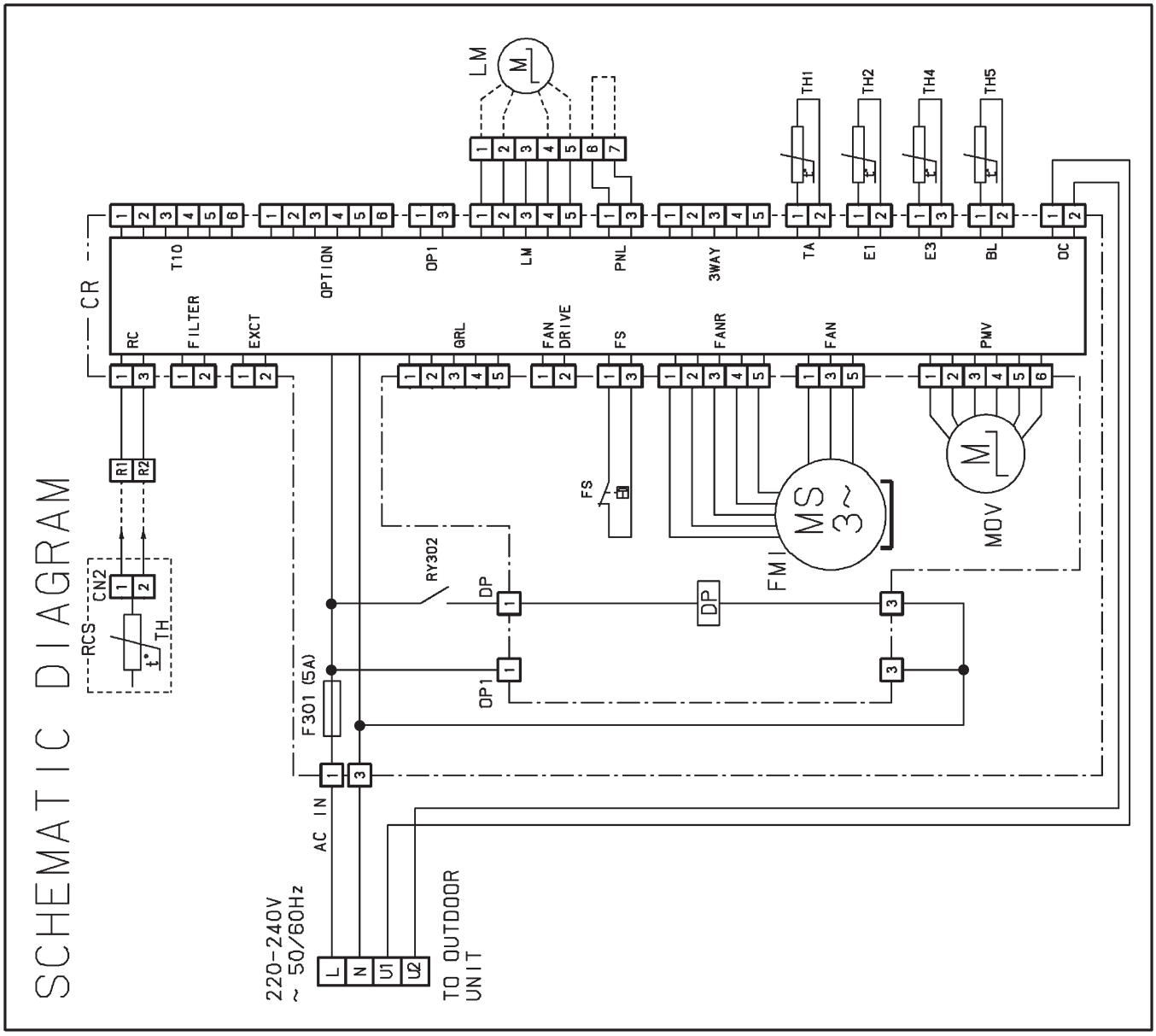

2. Indoor Unit

(5)-1 Electric Wiring Diagram S-22MK1E5/28MK1E5/36MK1E5

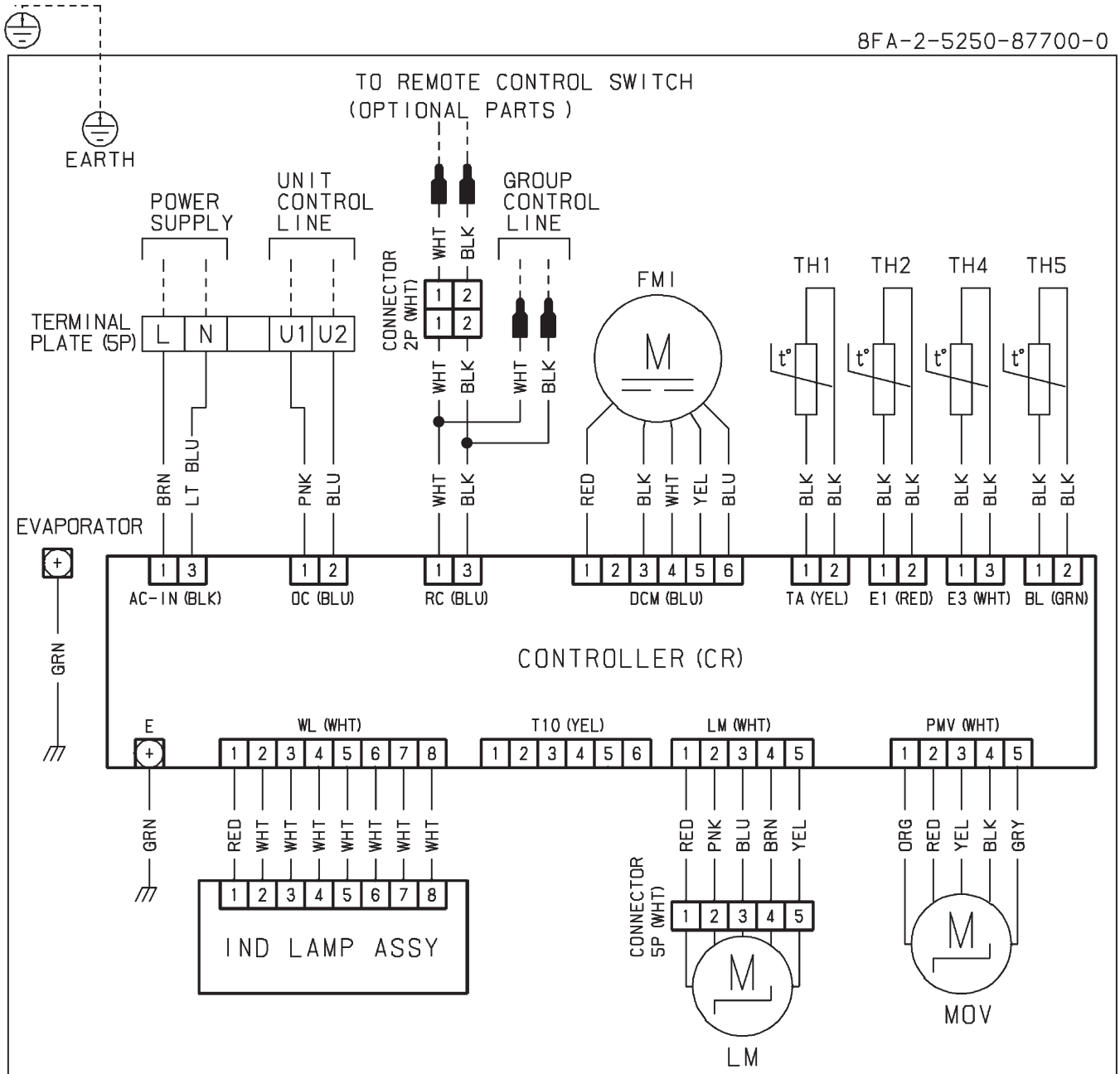

SYMBOLS	DESCRIPTION	SYMBOLS	DESCRIPTION
FMI	INDOOR FAN MOTOR	CR	INDOOR CONTROLLER
TH1	ROOM THERMISTOR	□	CONNECTOR
TH2	THERMISTOR (INDOOR COIL E1)	⊕	TERMINAL
TH4	THERMISTOR (INDOOR COIL E3)		
TH5	BLOW THERMISTOR		
MOV	MOTOR OPERATED VALVE		
LM	AUTO LOUVER MOTOR		

6

2. Indoor Unit

(5)-2 Electric Wiring Diagram S-45MK1E5/56MK1E5/73MK1E5/106MK1E5

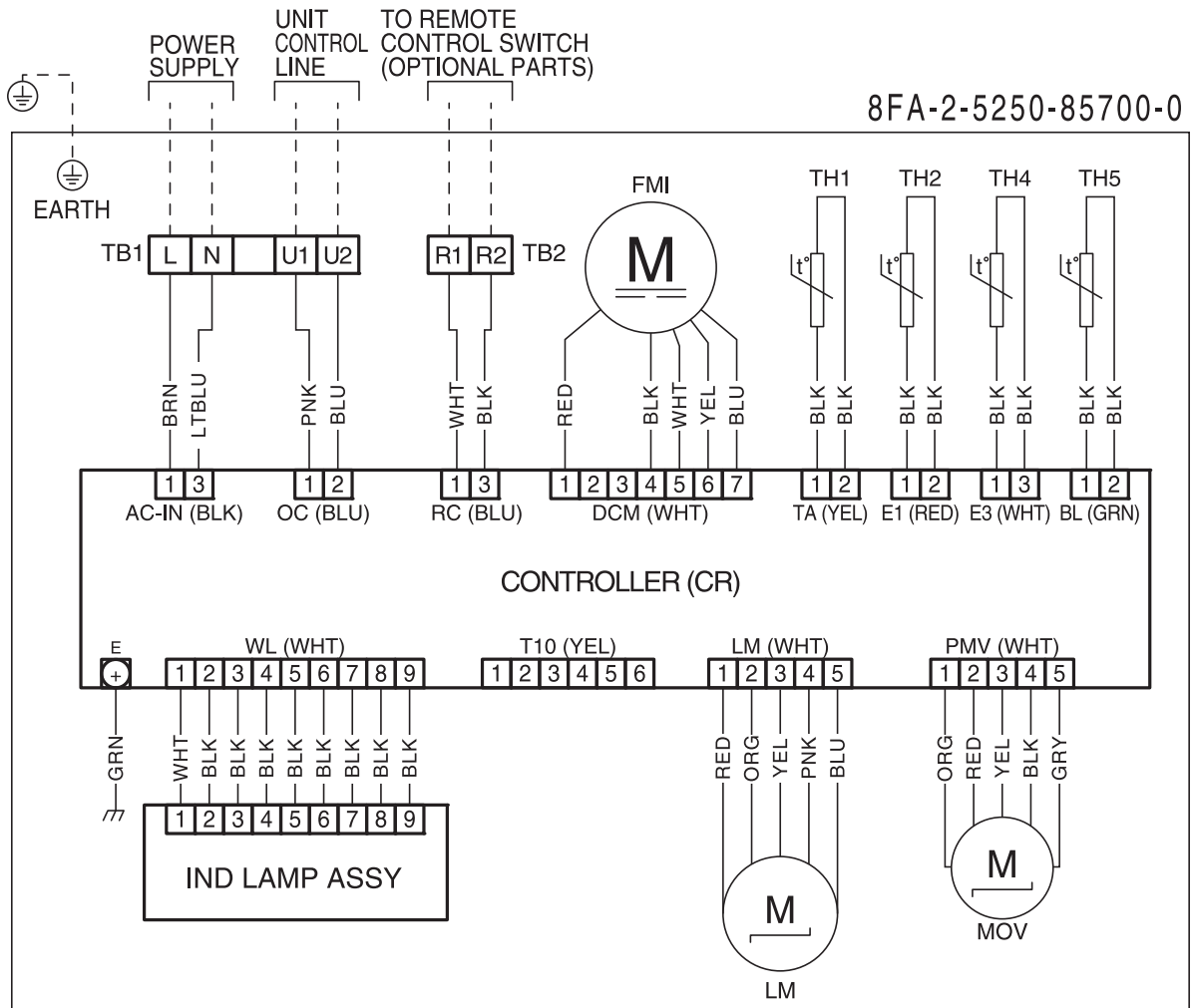

SYMBOLS	DESCRIPTION	SYMBOLS	DESCRIPTION
FMI	INDOOR FAN MOTOR	CR	INDOOR CONTROLLER
TH1	ROOM THERMISTOR	□	CONNECTOR
TH2	THERMISTOR (INDOOR COIL E1)	⊕	TERMINAL
TH4	THERMISTOR (INDOOR COIL E3)	TB1～2	TERMINAL PLATE
TH5	BLOW THERMISTOR		
MOV	MOTOR OPERATED VALVE		
LM	AUTO LOUVER MOTOR		

6

2. Indoor Unit

(5)-3 Electric Wiring Diagram S-22MK2E5/28MK2E5/36MK2E5

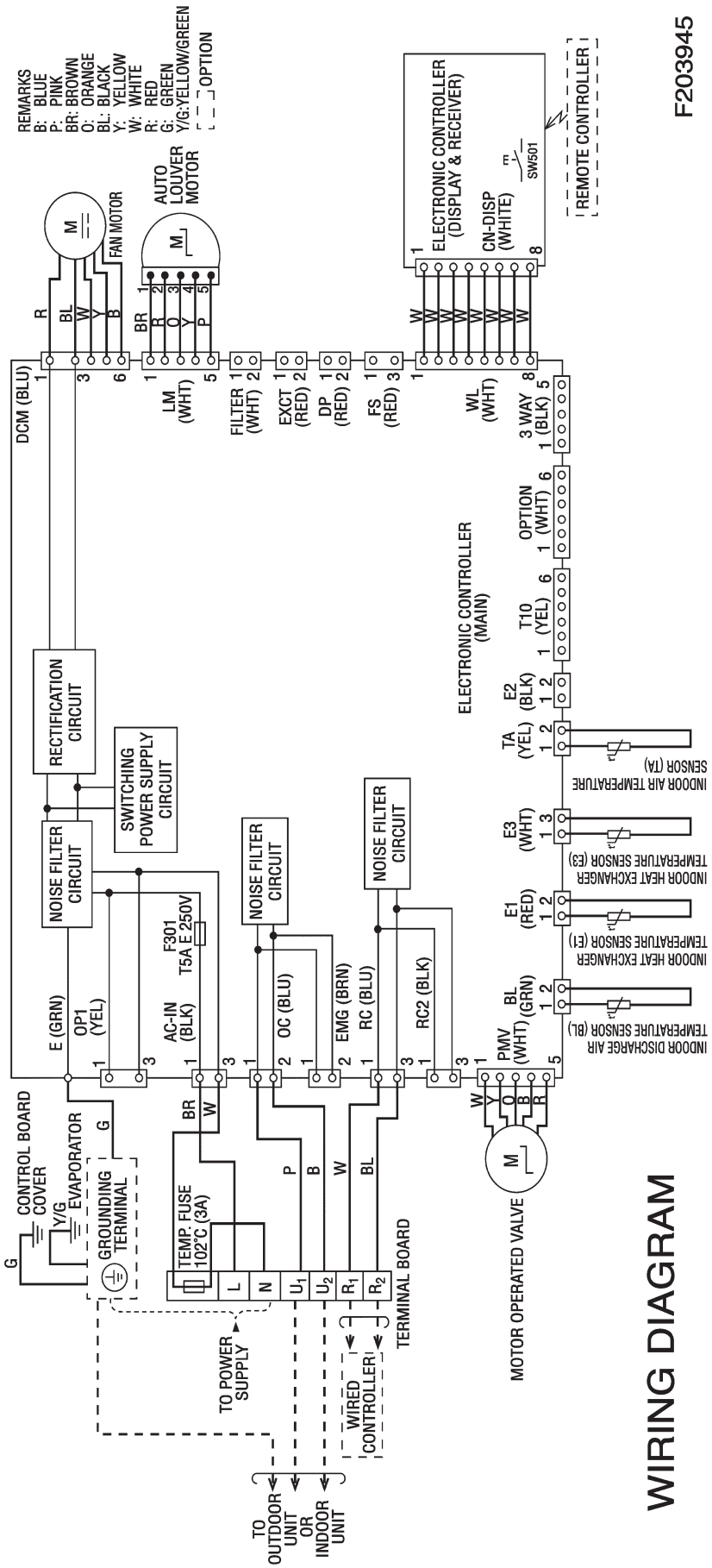

2. Indoor Unit

(6) Electric Wiring Diagram S-36MT1E5/45MT1E5/56MT1E5/73MT1E5/106MT1E5/140MT1E5

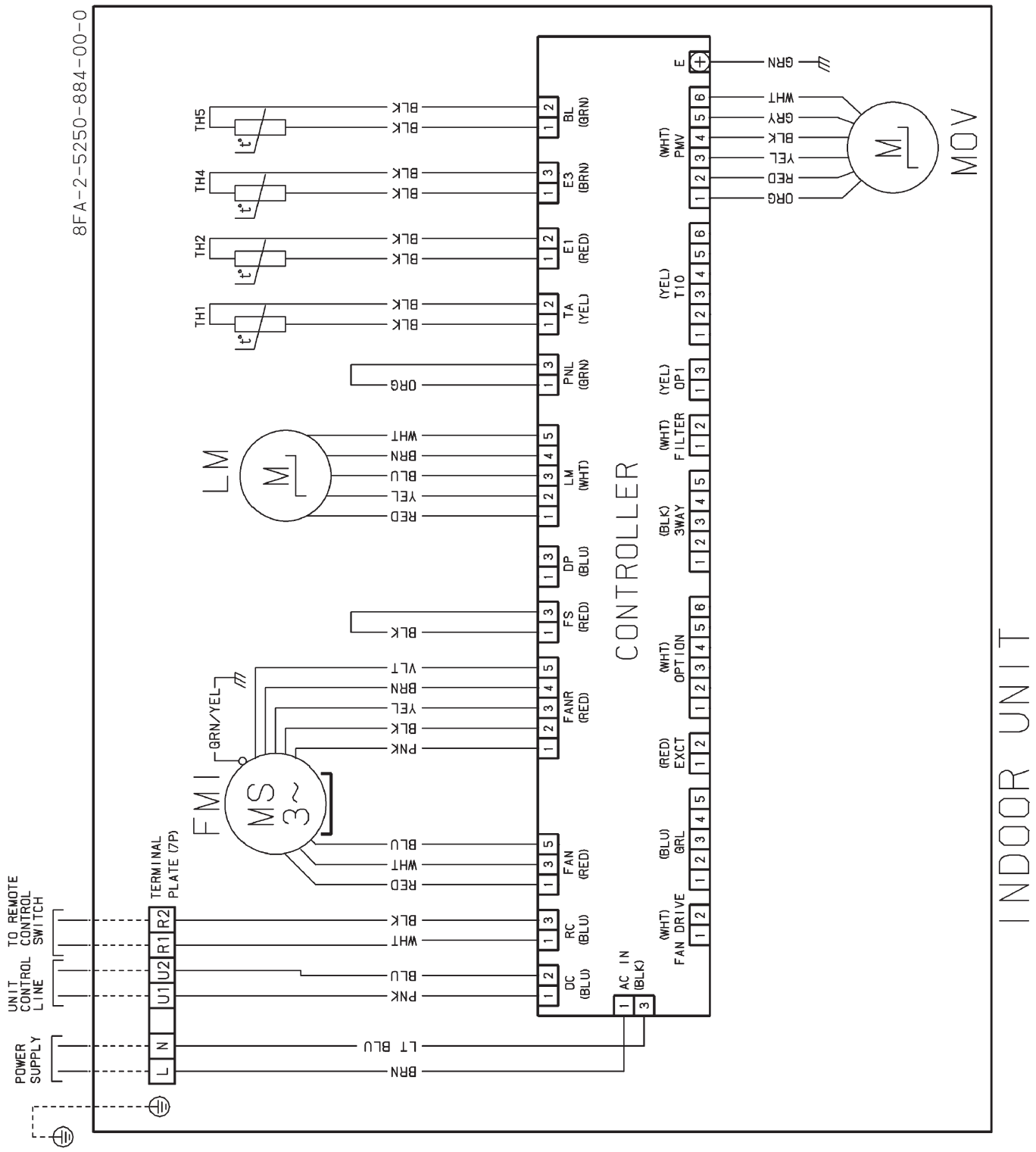

2. Indoor Unit

Schematic Diagram S-36MT1E5/45MT1E5/56MT1E5/73MT1E5/106MT1E5/140MT1E5

8FA-2-5250-884-00-0

SYMBOLS	DESCRIPTION
FMI	INDOOR FAN MOTOR
TH1	ROOM THERMISTOR
TH2	THERMISTOR (INDOOR COIL E1)
TH4	THERMISTOR (INDOOR COIL E3)
TH5	THERMISTOR (DISCHARGE AIR)
F301	FUSE
MOV	MOTOR OPERATED VALVE
CR	INDOOR CONTROLLER
LM	AUTO LOUVER MOTOR
RY302	AUXILIARY RELAY
(DP)	DRAIN PUMP (OPTION)
(FS)	FLOAT SWITCH (OPTION)
(RCS)	REMOTE CONTROL SWITCH (OPTION) TH:ROOM THERMISTOR
□	CONNECTOR, TERMINAL PLATE
⊕	TERMINAL

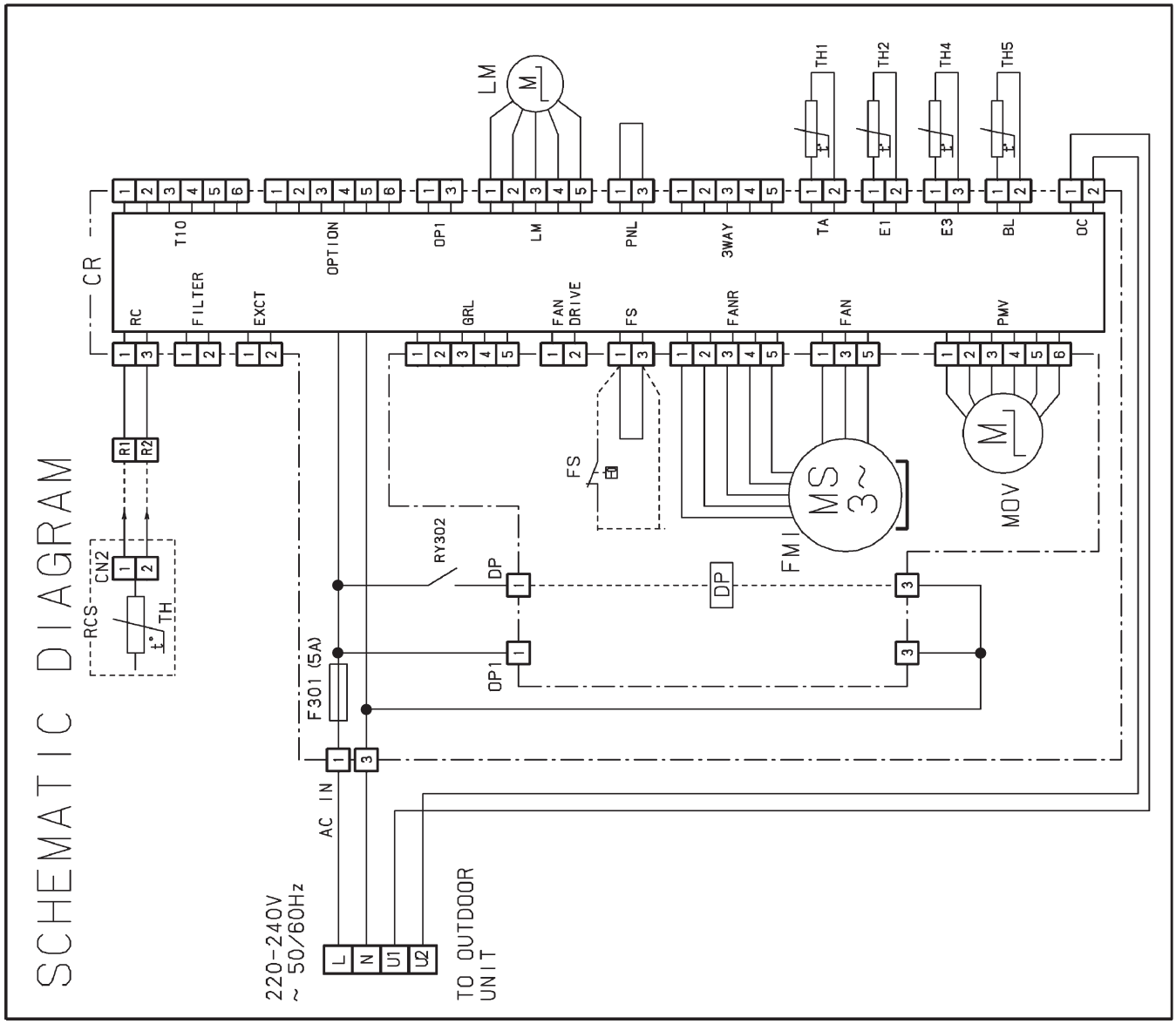

2. Indoor Unit

(7) Electric Wiring Diagram S-22MF2E5/28MF2E5/36MF2E5/45MF2E5/56MF2E5/ 60MF2E5/73MF2E5/90MF2E5/106MF2E5/140MF2E5/160MF2E5

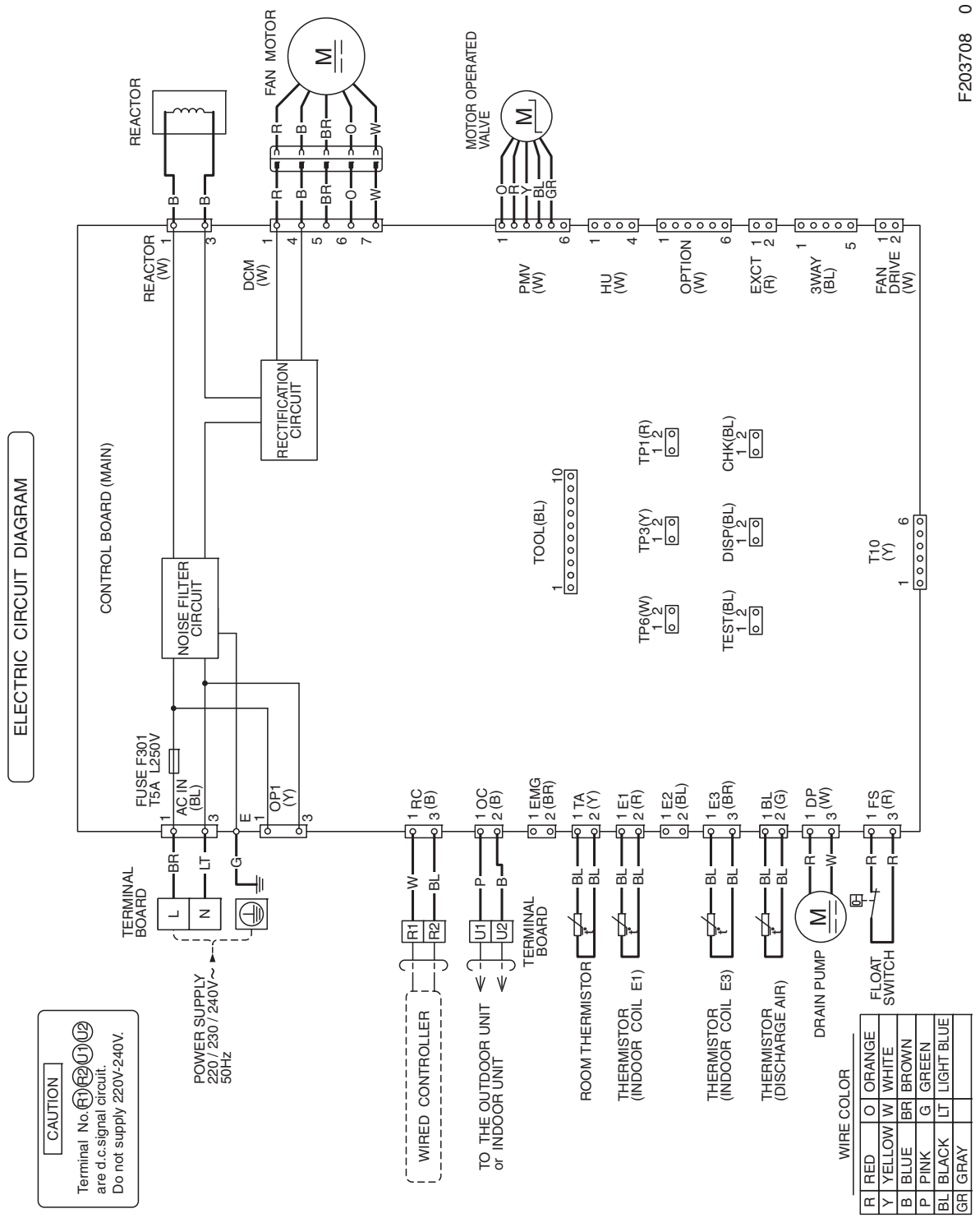

2. Indoor Unit

(8) Electric Wiring Diagram S-22MF1E5/28MF1E5/36MF1E5/45MF1E5/56MF1E5/ 73MF1E5/90MF1E5/106MF1E5/140MF1E5/160MF1E5

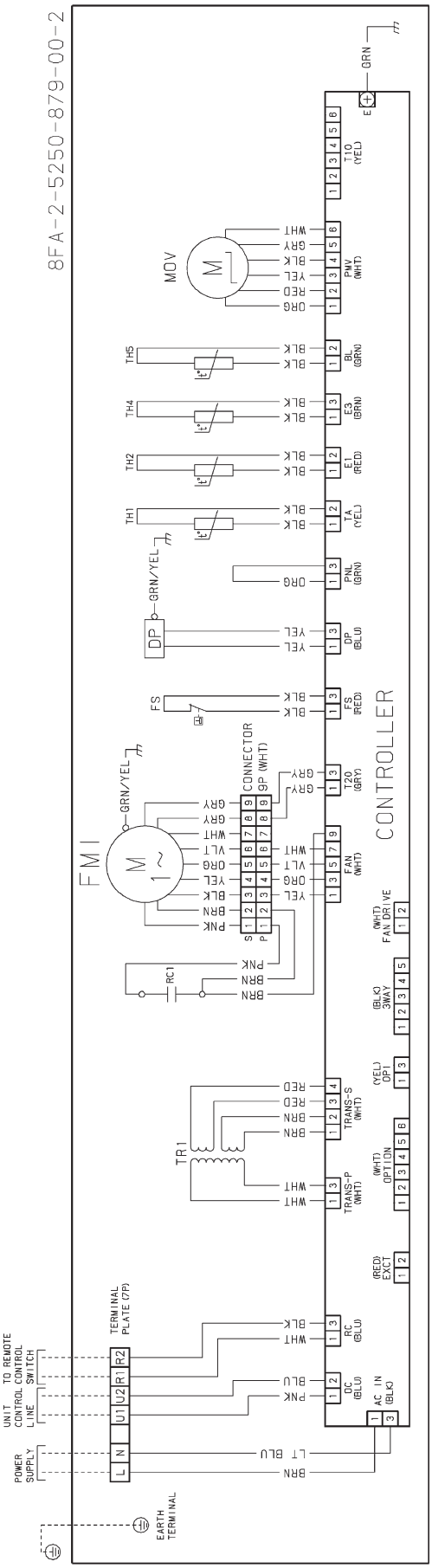

2. Indoor Unit

Schematic Diagram S-22MF1E5/28MF1E5/36MF1E5/45MF1E5/56MF1E5/ 73MF1E5/90MF1E5/106MF1E5/140MF1E5/160MF1E5

8FA-2-5250-879-00-2

SYMBOLS	DESCRIPTION
FMI	INDOOR FAN MOTOR
MOV	MOTOR OPERATED VALVE
49FI	INDOOR MOTOR THERMAL PROTECTOR
RC1	RUNNING CAPACITOR
TR1	POWER TRANSFORMER
DP	DRAIN PUMP
FS	FLOAT SWITCH
TH1	ROOM THERMISTOR
TH2	THERMISTOR (INDOOR COIL E1)
TH4	THERMISTOR (INDOOR COIL E3)
TH5	THERMISTOR (DISCHARGE AIR)
F1	FUSE
1X~3X	AUXILIARY RELAY
RY2	
CR	INDOOR CONTROLLER
(RCS)	REMOTE CONTROL SWITCH (OPTION) TH:ROOM THERMISTOR
□	CONNECTOR, TERMINAL PLATE
⊕	TERMINAL

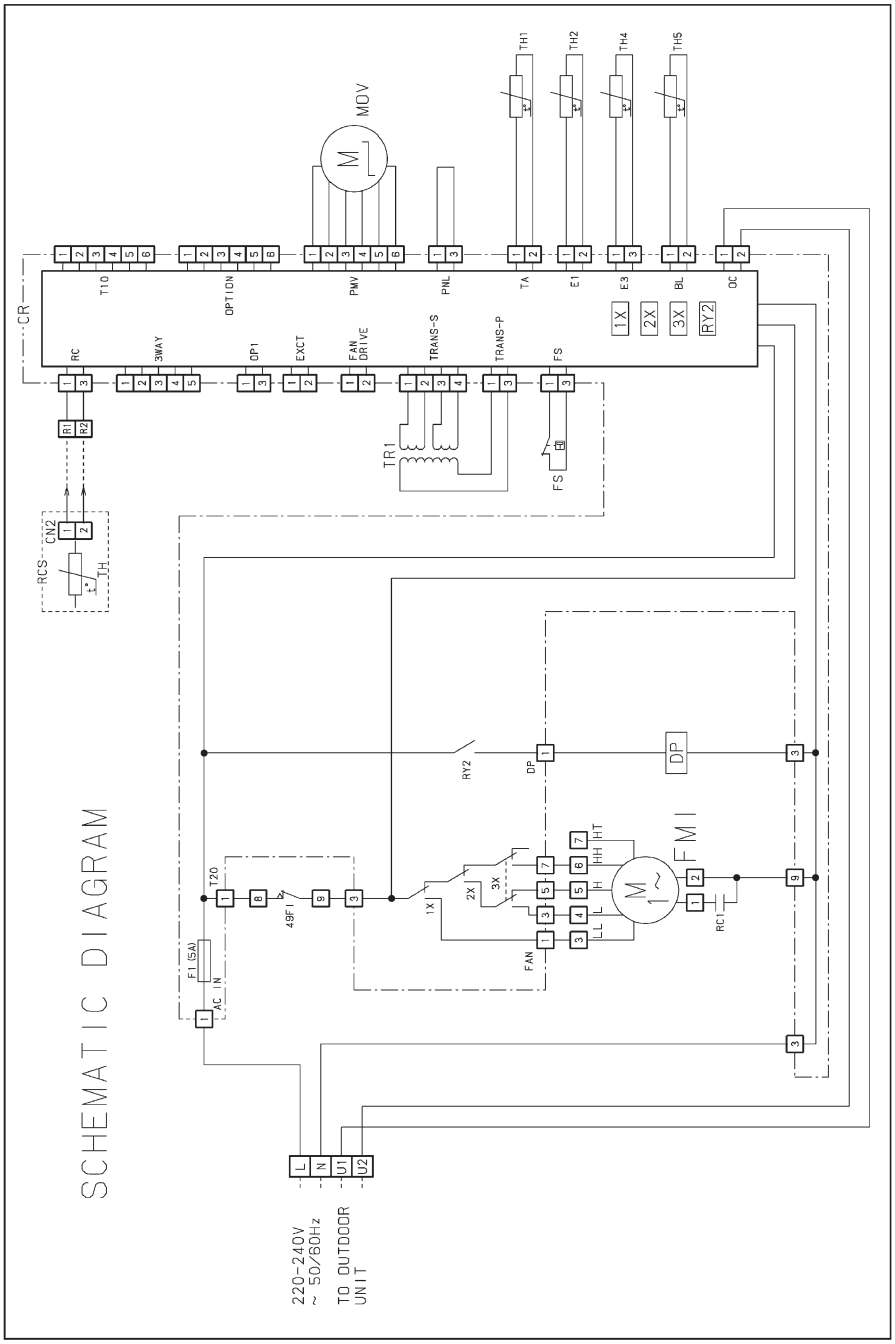

2. Indoor Unit

(9) Electric Wiring Diagram S-15MM1E5/22MM1E5/28MM1E5/36MM1E5/45MM1E5/56MM1E5

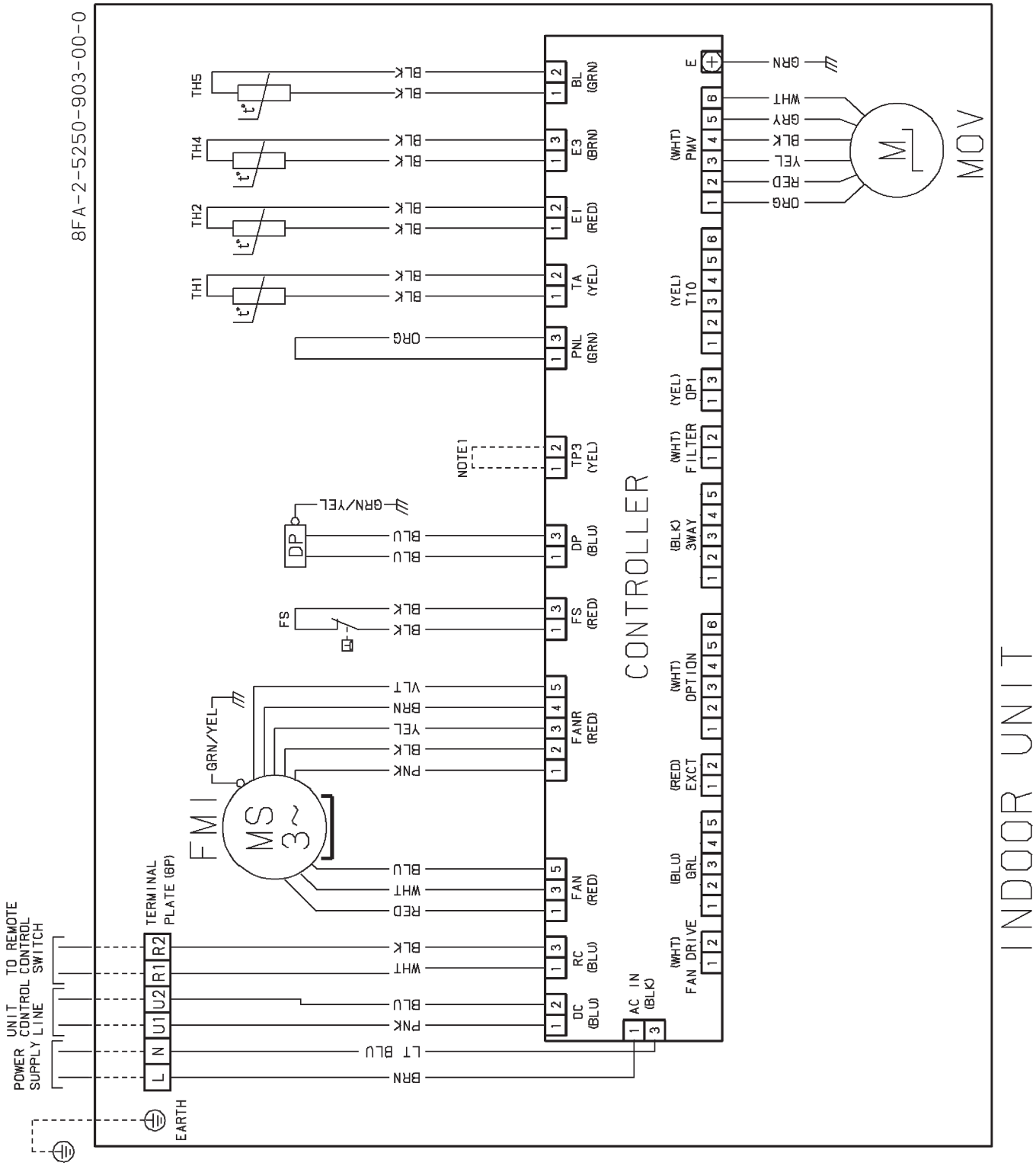

2. Indoor Unit

Schematic Diagram S-15MM1E5/22MM1E5/28MM1E5/36MM1E5/45MM1E5/56MM1E5

8FA-2-5250-903-00-0

SYMBOLS	DESCRIPTION
FMI	INDOOR FAN MOTOR
TH1	ROOM THERMISTOR
TH2	THERMISTOR (INDOOR COIL E1)
TH4	THERMISTOR (INDOOR COIL E3)
TH5	THERMISTOR (DISCHARGE AIR)
F301	FUSE
MOV	MOTOR OPERATED VALVE
CR	INDOOR CONTROLLER
RY302	AUXILIARY RELAY
DP	DRAIN PUMP
FS	FLOAT SWITCH
(RCS)	REMOTE CONTROL SWITCH (OPTION) TH:ROOM THERMISTOR
□	CONNECTOR, TERMINAL PLATE
⊕	TERMINAL

NOTE1
When using with high static pressure mode, short circuit the FAN-TAP, TP3 (2P:Yellow) on the PCB by the 2P connectors attached to the rear of the lid of the box.

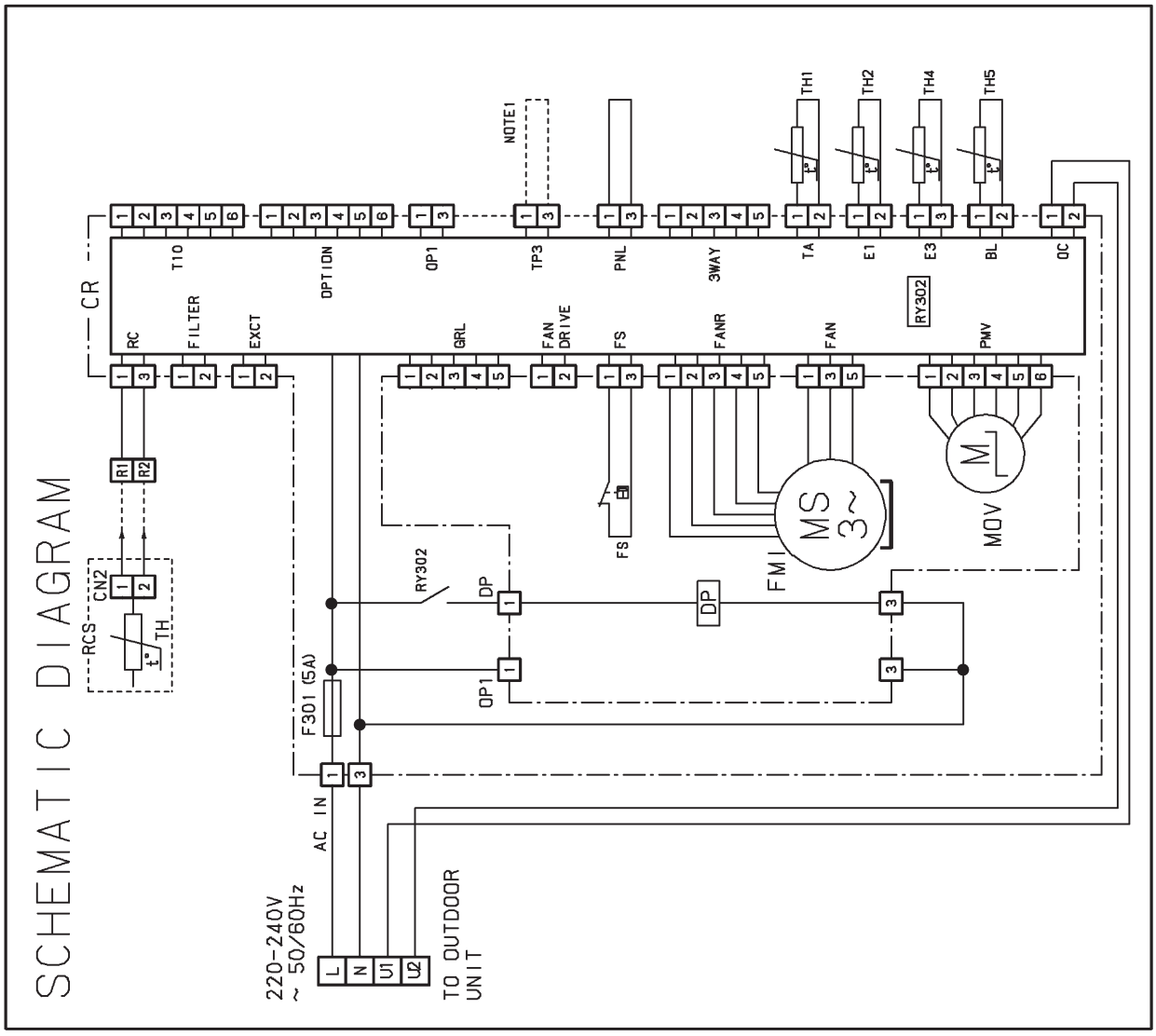

6

2. Indoor Unit

(10)-1 Electric Wiring Diagram S-73ME1E5

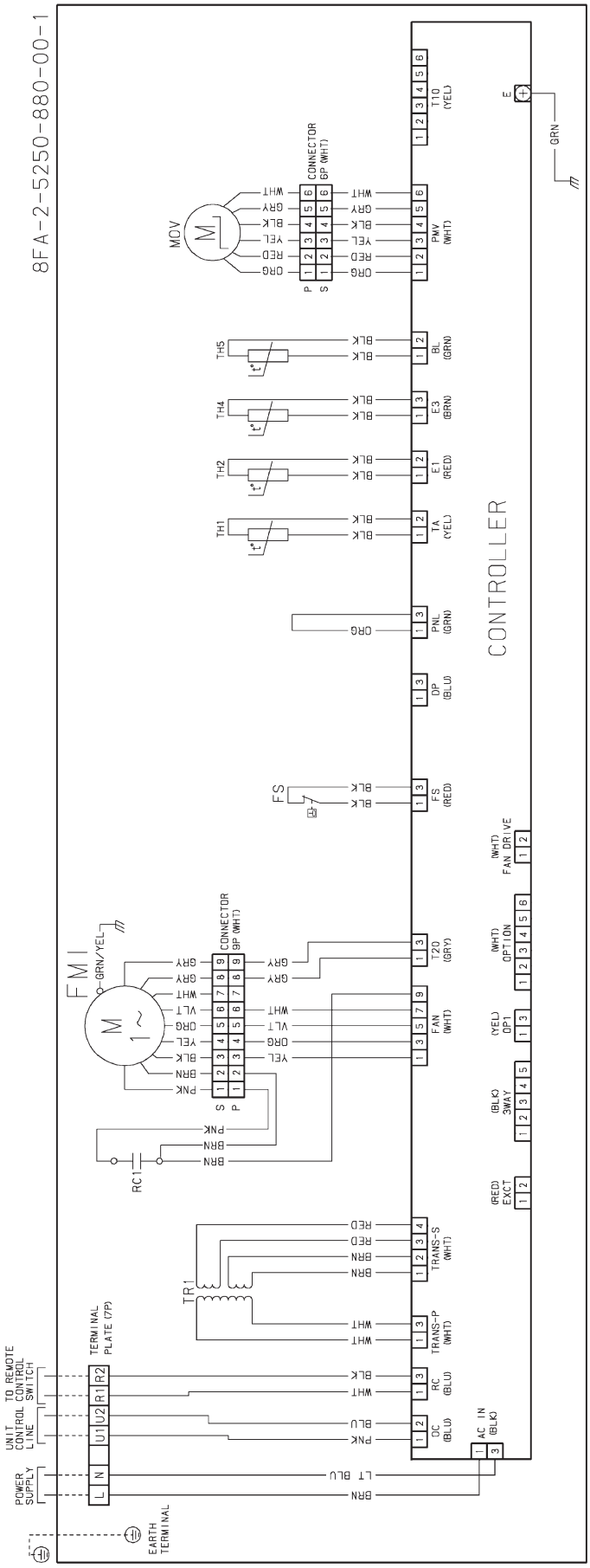

2. Indoor Unit

Schematic Diagram S-73ME1E5

8FA-2-5250-880-00-1

SYMBOLS	DESCRIPTION
FMI	INDOOR FAN MOTOR
MOV	MOTOR OPERATED VALVE
49FI	INDOOR MOTOR THERMAL PROTECTOR
RC1	RUNNING CAPACITOR
TR1	POWER TRANSFORMER
FS	FLOAT SWITCH
TH1	ROOM THERMISTOR
TH2	THERMISTOR (INDOOR COIL E1)
TH4	THERMISTOR (INDOOR COIL E3)
TH5	THERMISTOR (DISCHARGE AIR)
F1	FUSE
CR	INDOOR CONTROLLER
1X~3X	AUXILIARY RELAY
□	CONNECTOR, TERMINAL PLATE
⊕	TERMINAL
(RCS)	REMOTE CONTROL SWITCH (OPTION) TH:ROOM THERMISTOR

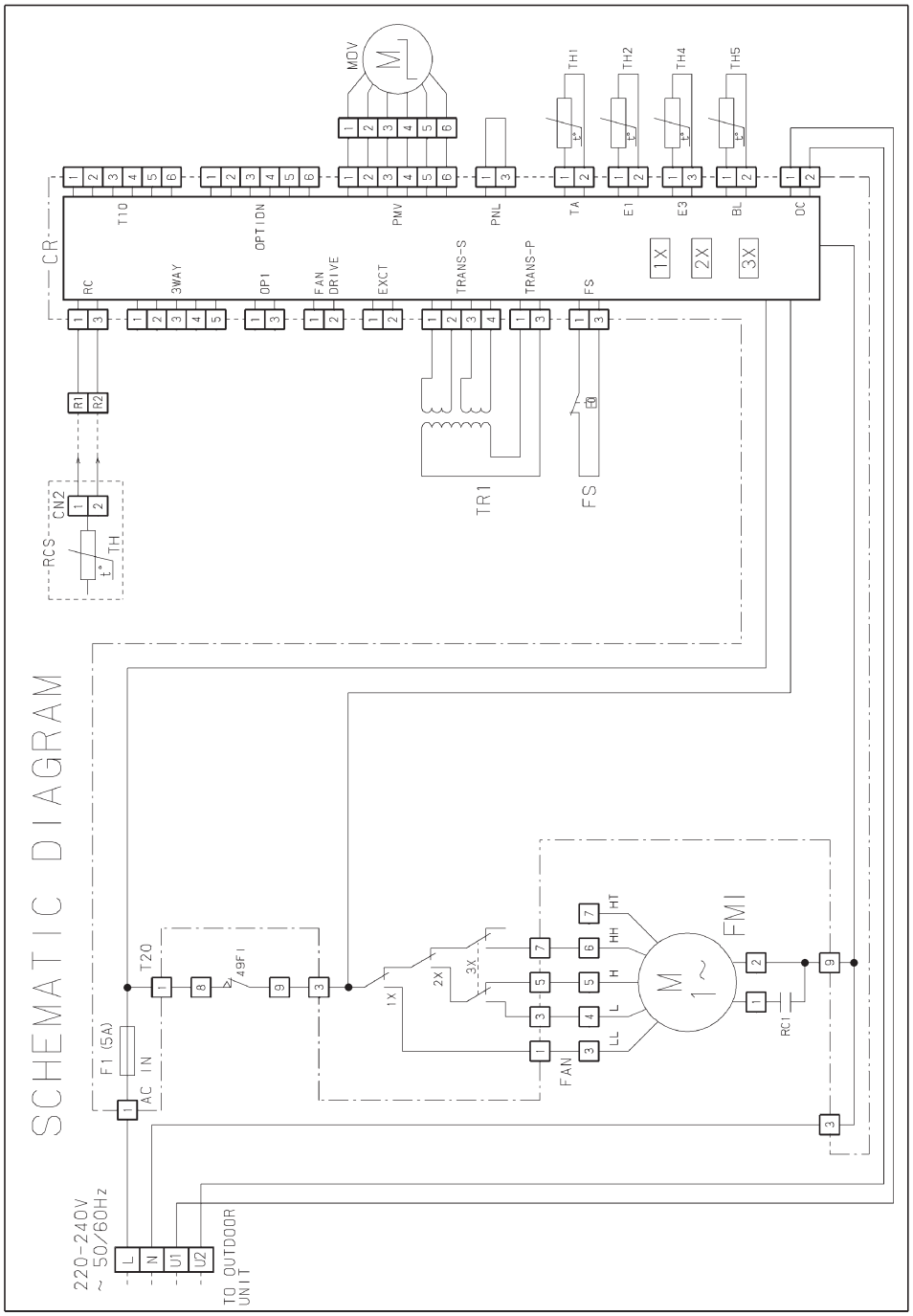

2. Indoor Unit

(10)-2 Electric Wiring Diagram S-106ME1E5

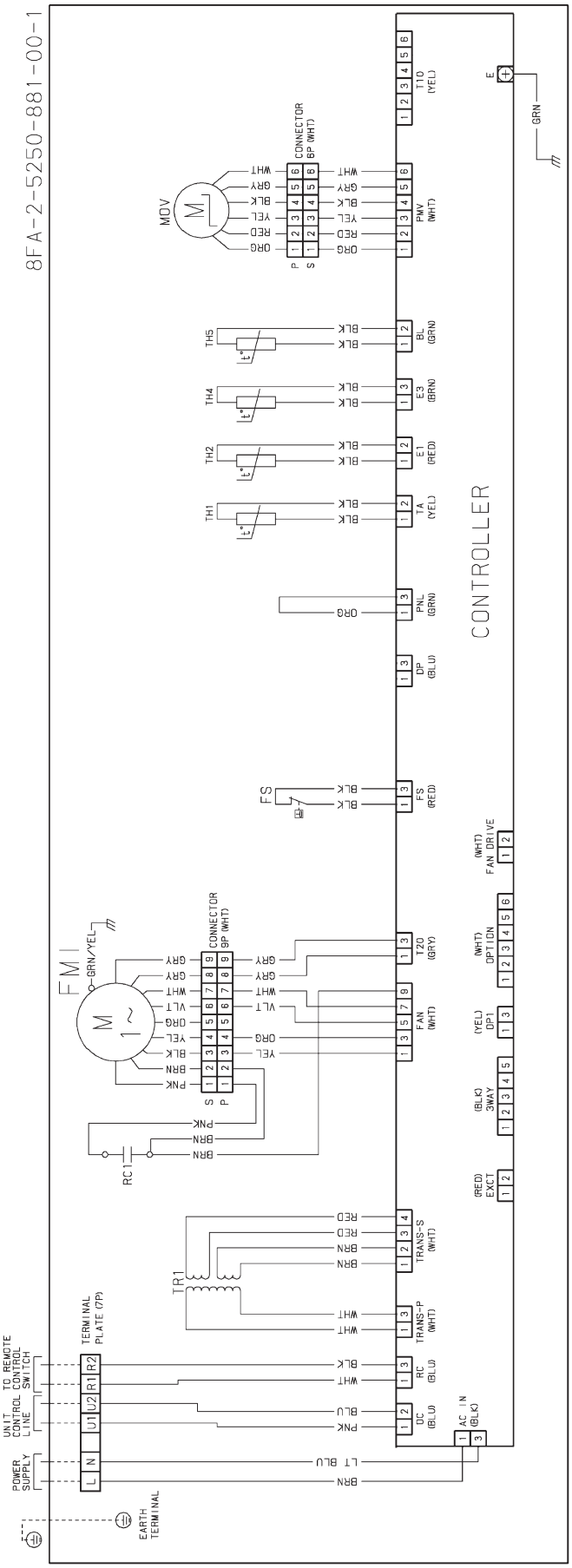

2. Indoor Unit

Schematic Diagram S-106ME1E5

8FA-2-5250-881-00-1

SYMBOLS	DESCRIPTION
FMI	INDOOR FAN MOTOR
MOV	MOTOR OPERATED VALVE
49FI	INDOOR MOTOR THERMAL PROTECTOR
RC1	RUNNING CAPACITOR
TR1	POWER TRANSFORMER
FS	FLOAT SWITCH
TH1	ROOM THERMISTOR
TH2	THERMISTOR (INDOOR COIL E1)
TH4	THERMISTOR (INDOOR COIL E3)
TH5	THERMISTOR (DISCHARGE AIR)
F1	FUSE
CR	INDOOR CONTROLLER
1X~3X	AUXILIARY RELAY
□	CONNECTOR, TERMINAL PLATE
⊕	TERMINAL
(RCS)	REMOTE CONTROL SWITCH (OPTION) TH:ROOM THERMISTOR

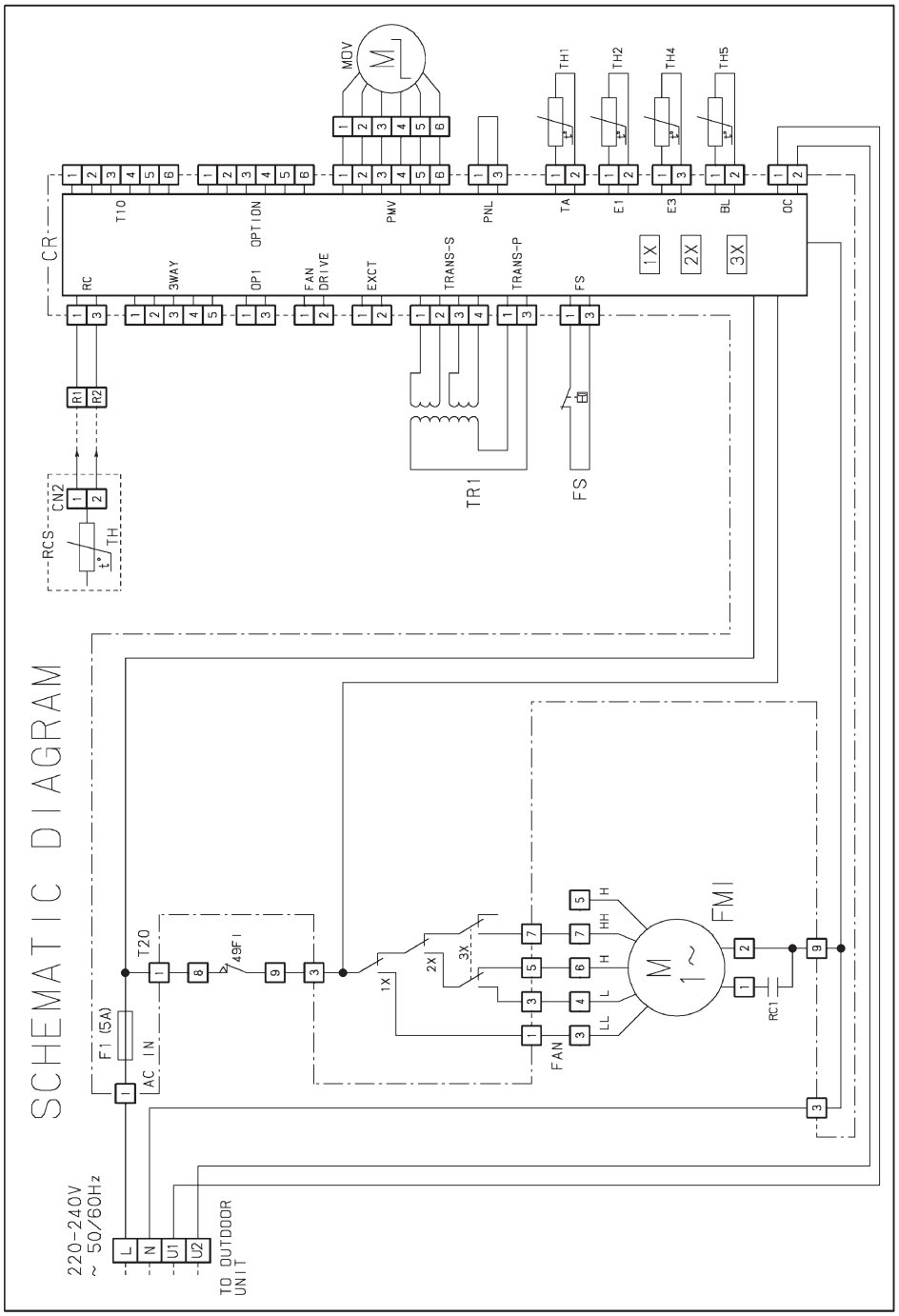

2. Indoor Unit

(10)-3 Electric Wiring Diagram S-140ME1E5

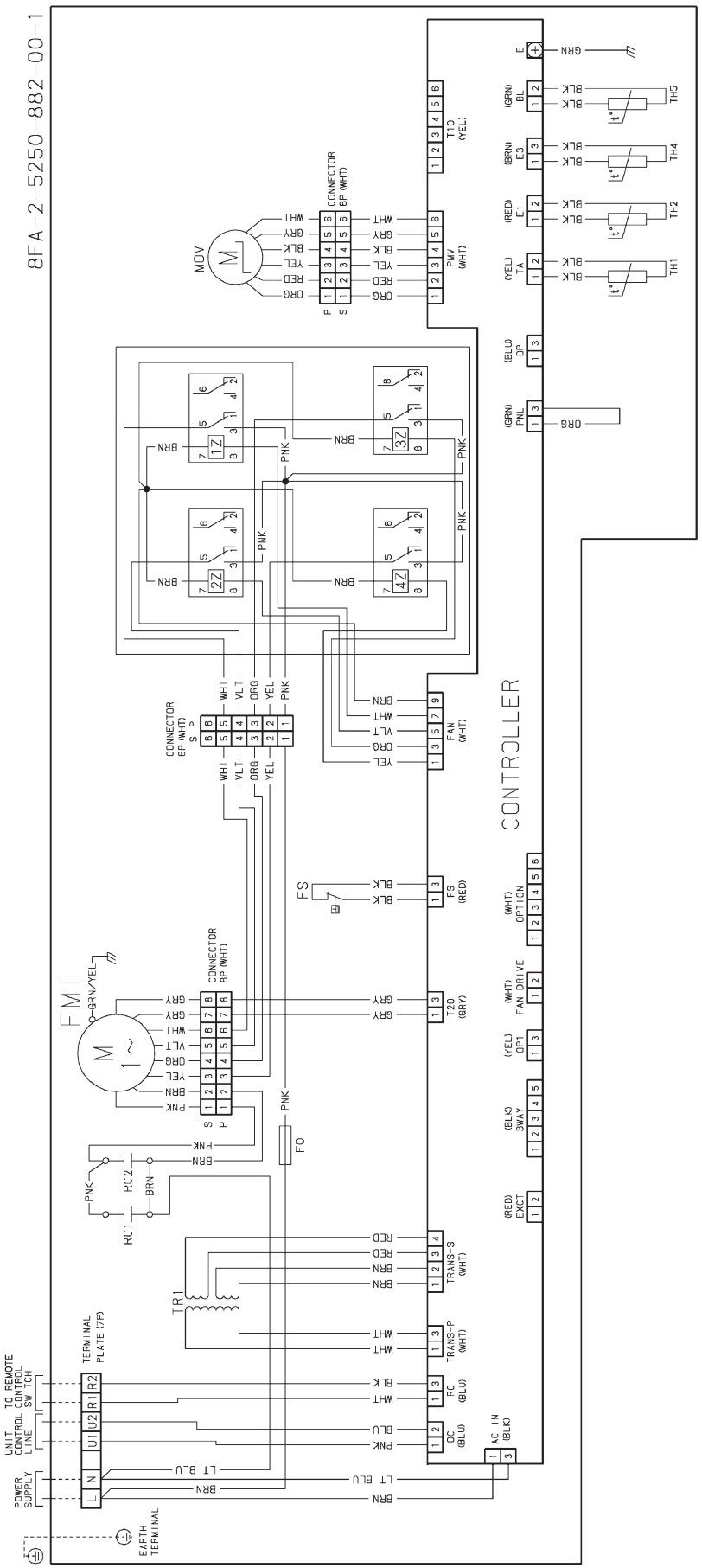

2. Indoor Unit

Schematic Diagram S-140ME1E5

8FA-2-5250-882-00-1

SYMBOLS	DESCRIPTION
FMI	INDOOR FAN MOTOR
MOV	MOTOR OPERATED VALVE
49FI	INDOOR MOTOR THERMAL PROTECTOR
RC1, 2	RUNNING CAPACITOR
TR1	POWER TRANSFORMER
FS	FLOAT SWITCH
TH1	ROOM THERMISTOR
TH2	THERMISTOR (INDOOR COIL E1)
TH4	THERMISTOR (INDOOR COIL E3)
TH5	THERMISTOR (DISCHARGE AIR)
FO, 1	FUSE
CR	INDOOR CONTROLLER
1X~3X	AUXILIARY RELAY
1Z~4Z	
	CONNECTOR, TERMINAL PLATE
	TERMINAL
(RCS)	REMOTE CONTROL SWITCH (OPTION) TH:ROOM THERMISTOR

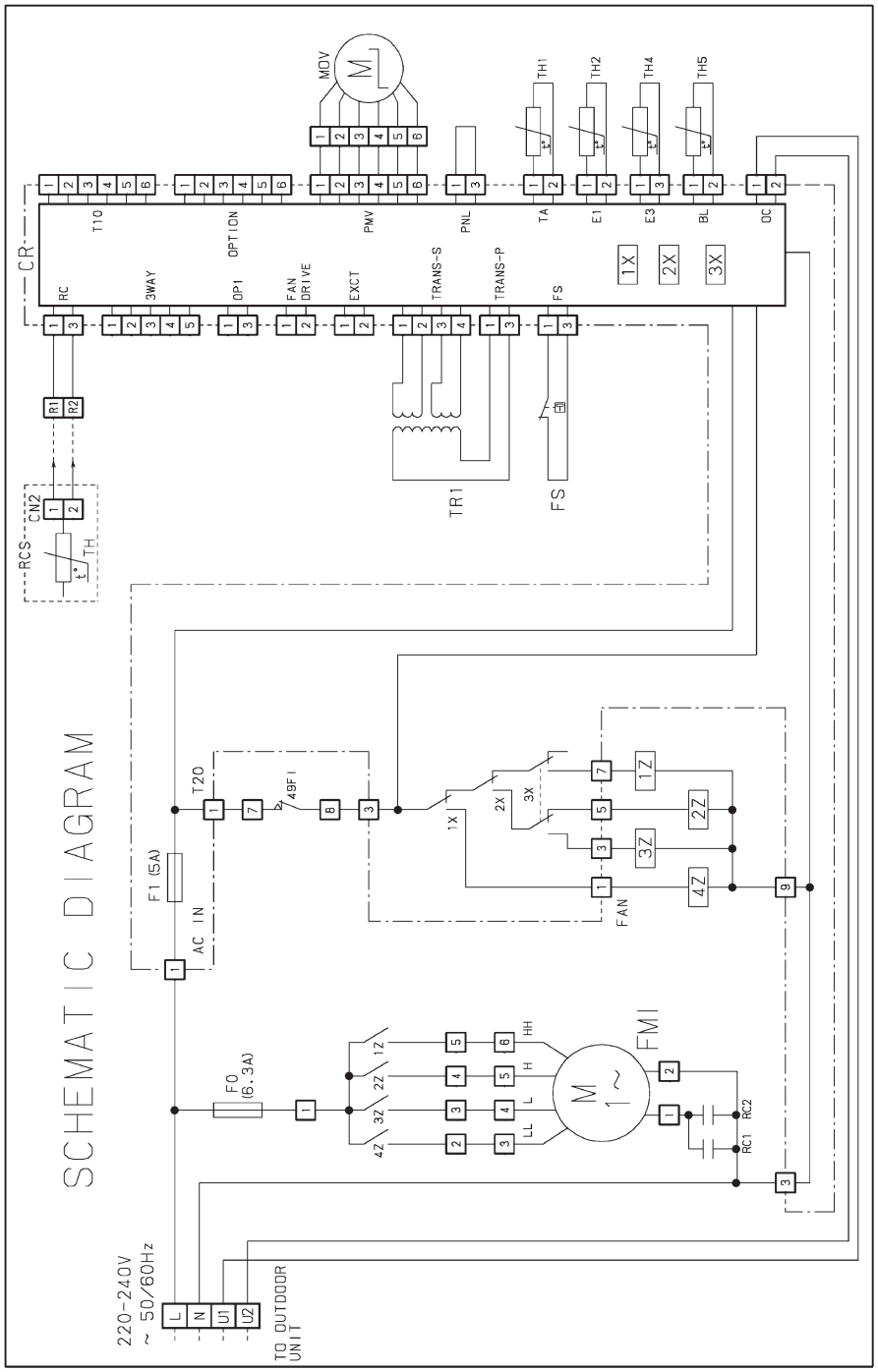

2. Indoor Unit

(10)-4 Electric Wiring Diagram S-224ME1E5

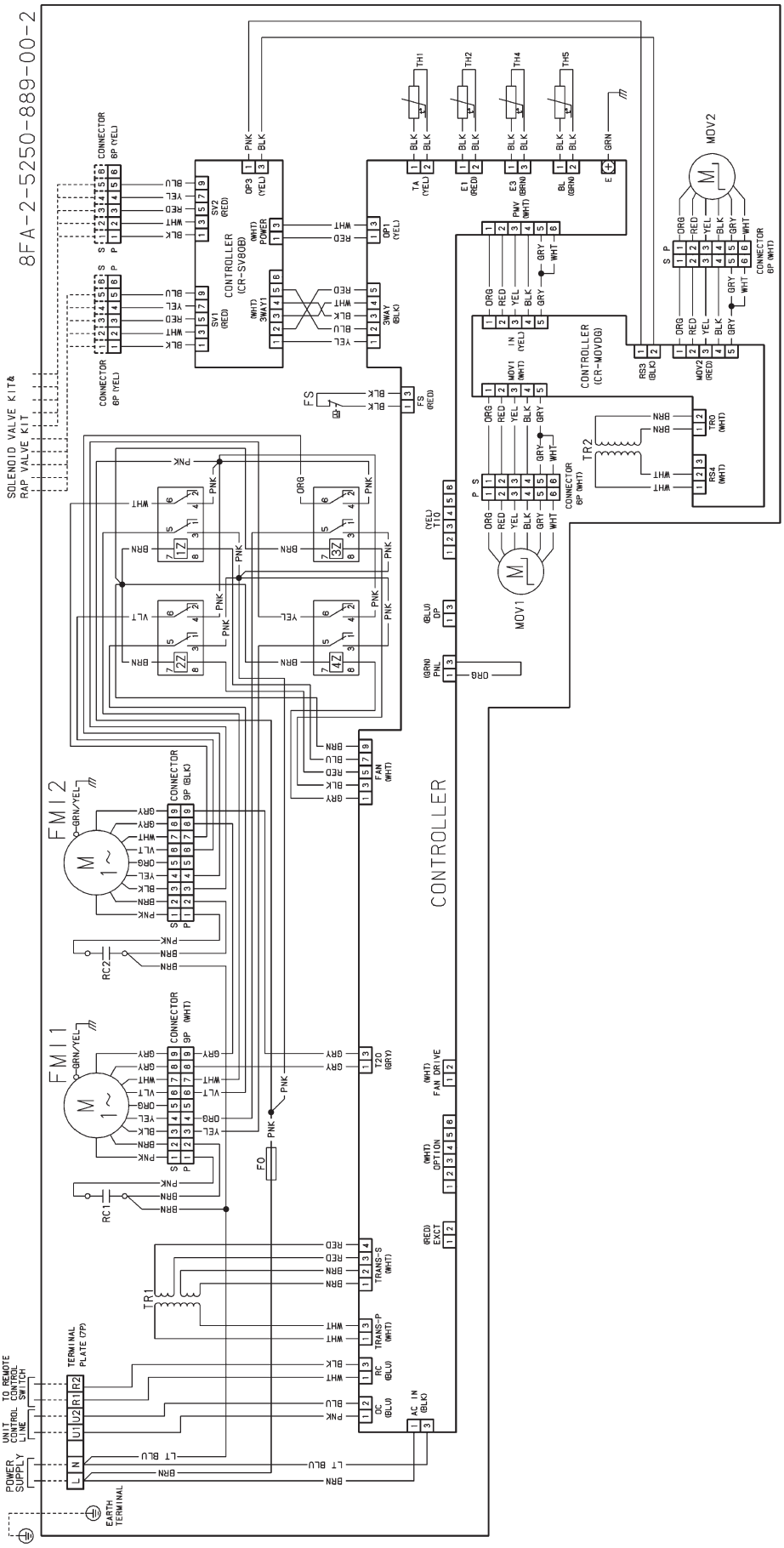

2. Indoor Unit

Schematic Diagram S-224ME1E5

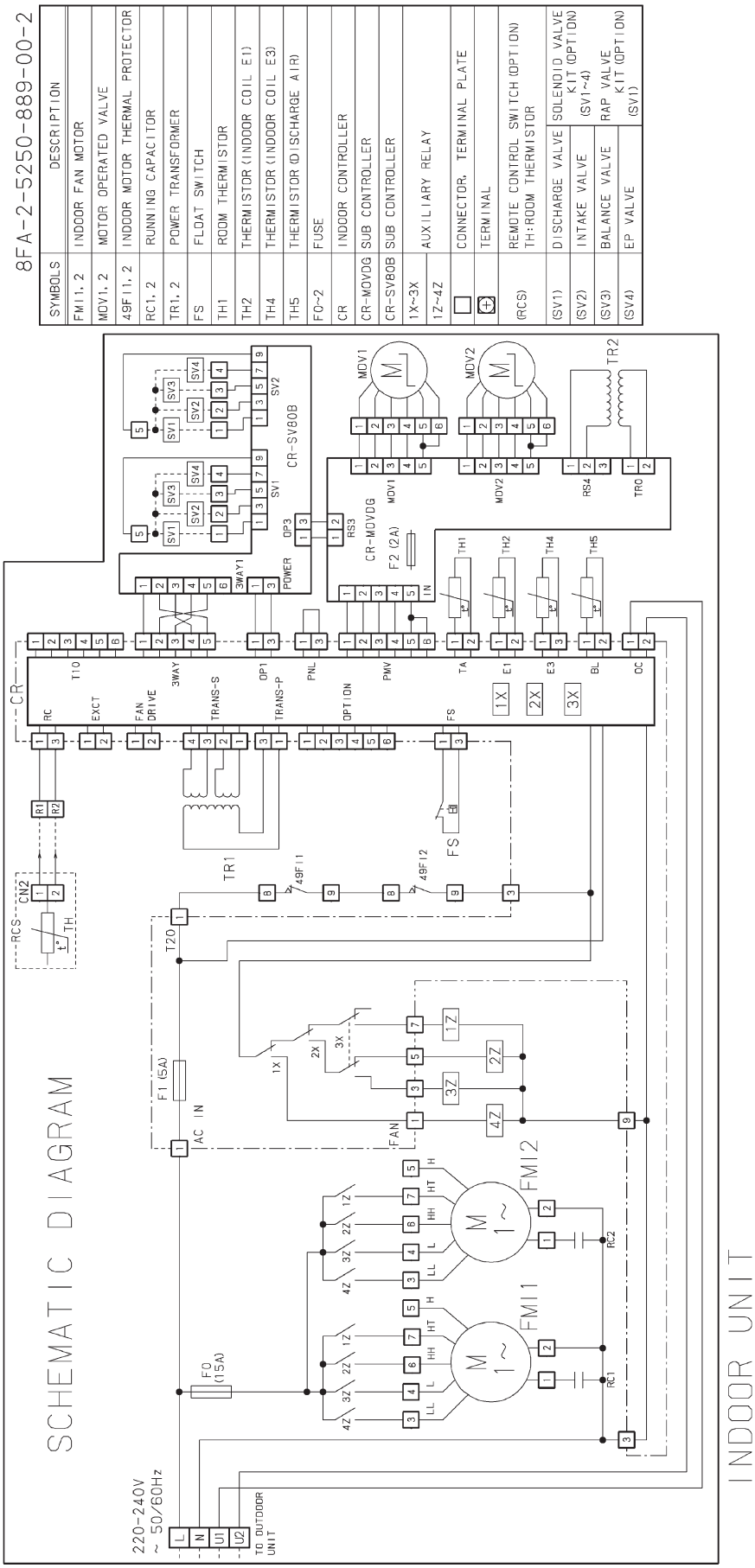

2. Indoor Unit

(10)-5 Electric Wiring Diagram S-280ME1E5

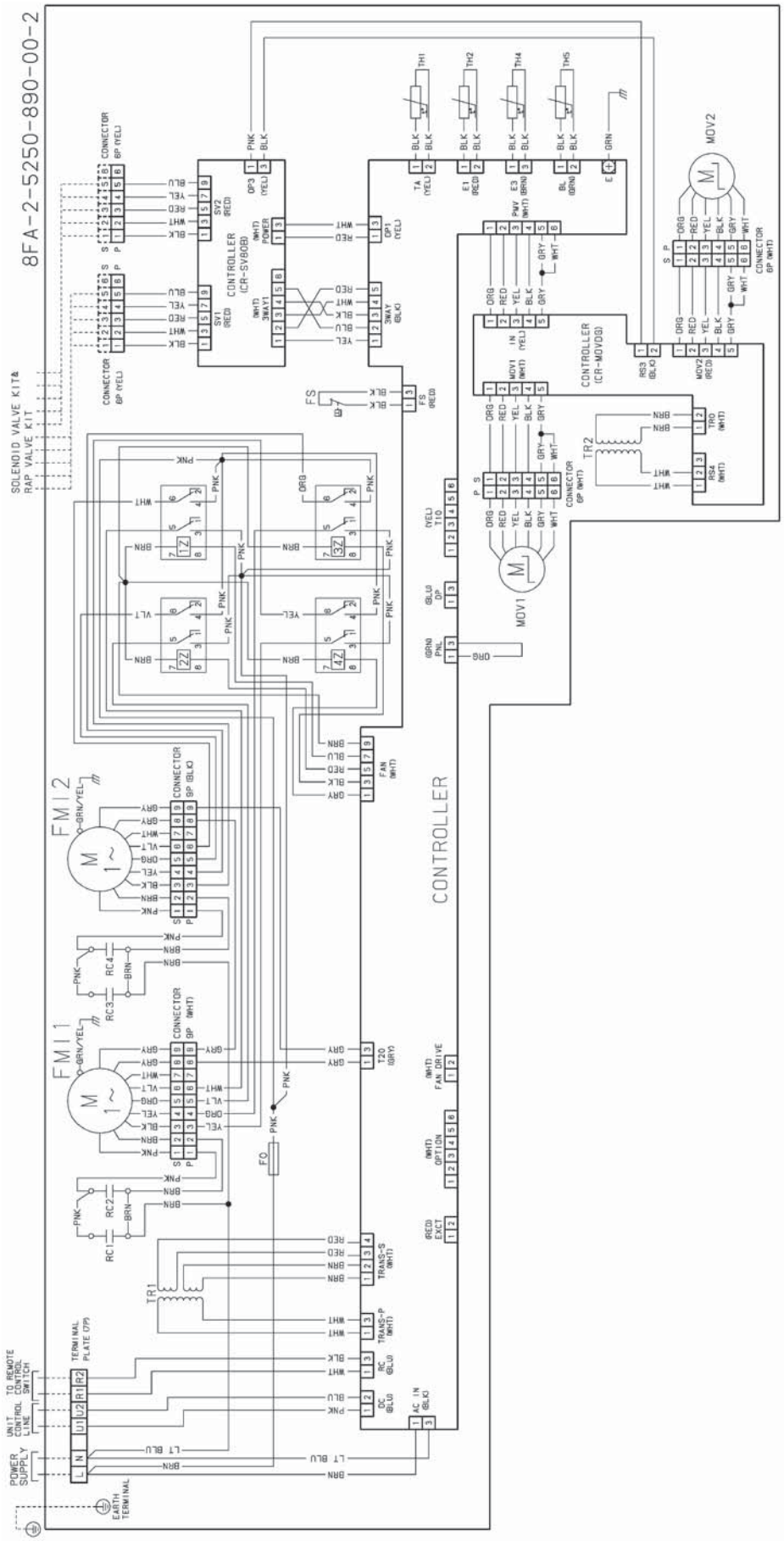

2. Indoor Unit

Schematic Diagram S-280ME1E5

8FA-2-5250-890-00-2

SYMBOLS	DESCRIPTION
FMI1, 2	INDOOR FAN MOTOR
MOV1, 2	MOTOR OPERATED VALVE
49FI1, 2	INDOOR MOTOR THERMAL PROTECTOR
RC1~4	RUNNING CAPACITOR
TR1, 2	POWER TRANSFORMER
FS	FLOAT SWITCH
TH1	ROOM THERMISTOR
TH2	THERMISTOR (INDOOR COIL E1)
TH4	THERMISTOR (INDOOR COIL E3)
TH5	THERMISTOR (DISCHARGE AIR)
FO~2	FUSE
CR	INDOOR CONTROLLER
CR-MOVDG	SUB CONTROLLER
CR-SV80B	SUB CONTROLLER
1X~3X	AUXILIARY RELAY
1Z~4Z	
□	CONNECTOR, TERMINAL PLATE
⊕	TERMINAL
(RCS)	REMOTE CONTROL SWITCH (OPTION) TH:ROOM THERMISTOR
(SV1)	DISCHARGE VALVE — SOLENOID VALVE KIT (OPTION) (SV1~4)
(SV2)	INTAKE VALVE
(SV3)	BALANCE VALVE — RAP VALVE KIT (OPTION) (SV1)
(SV4)	EP VALVE

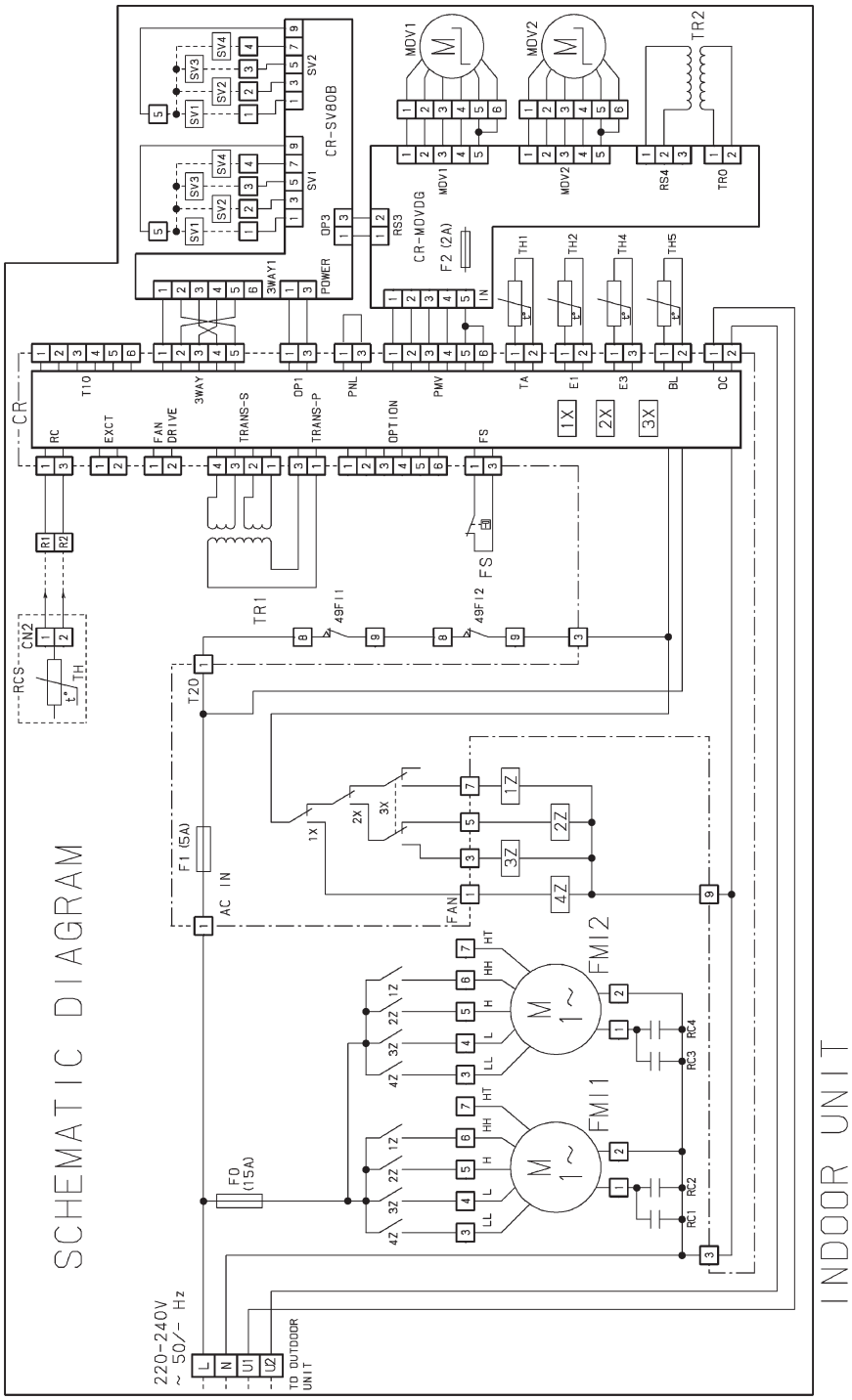

2. Indoor Unit

(10)-6 Electric Wiring Diagram S-224ME1E5A

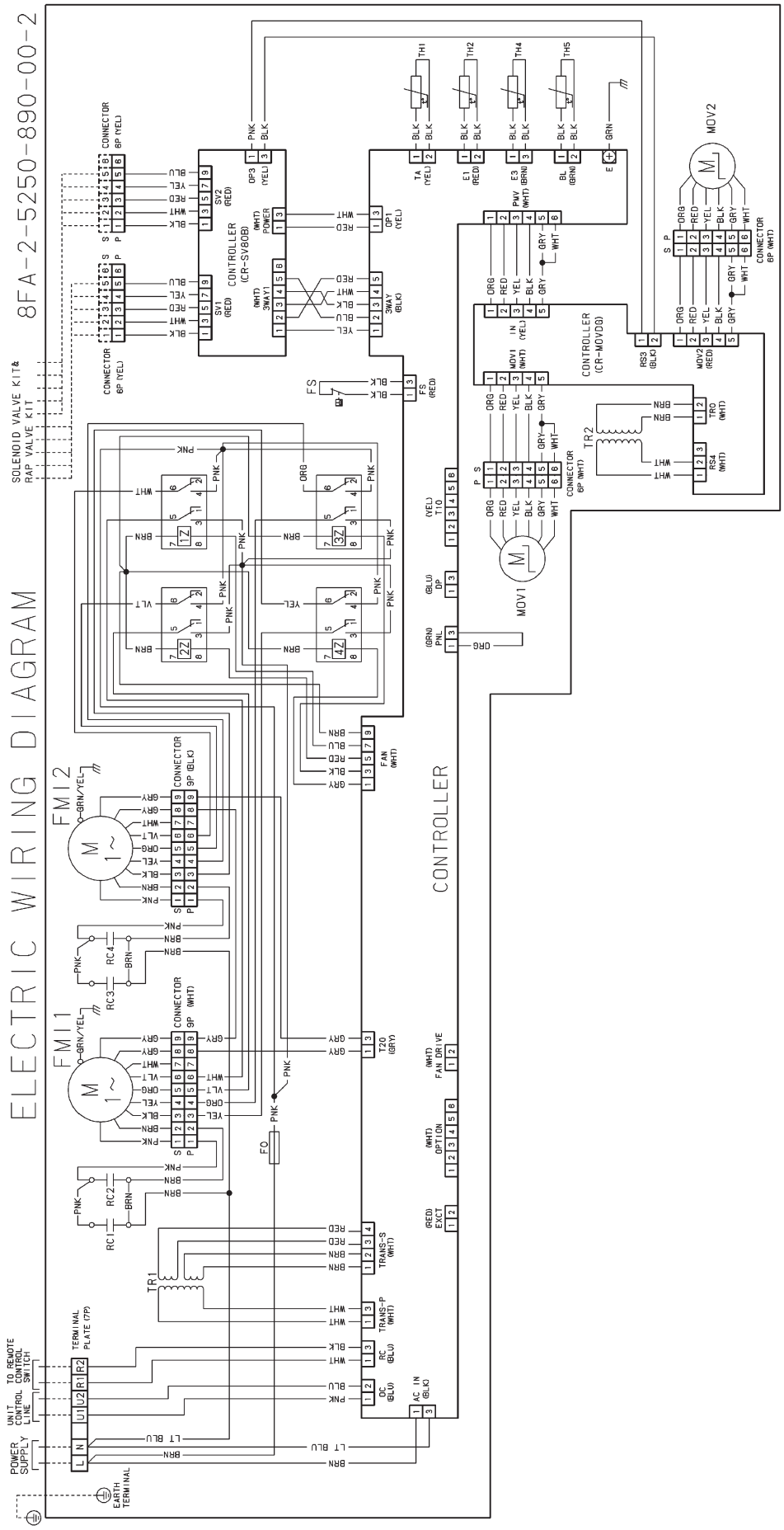

2. Indoor Unit

Schematic Diagram S-224ME1E5A

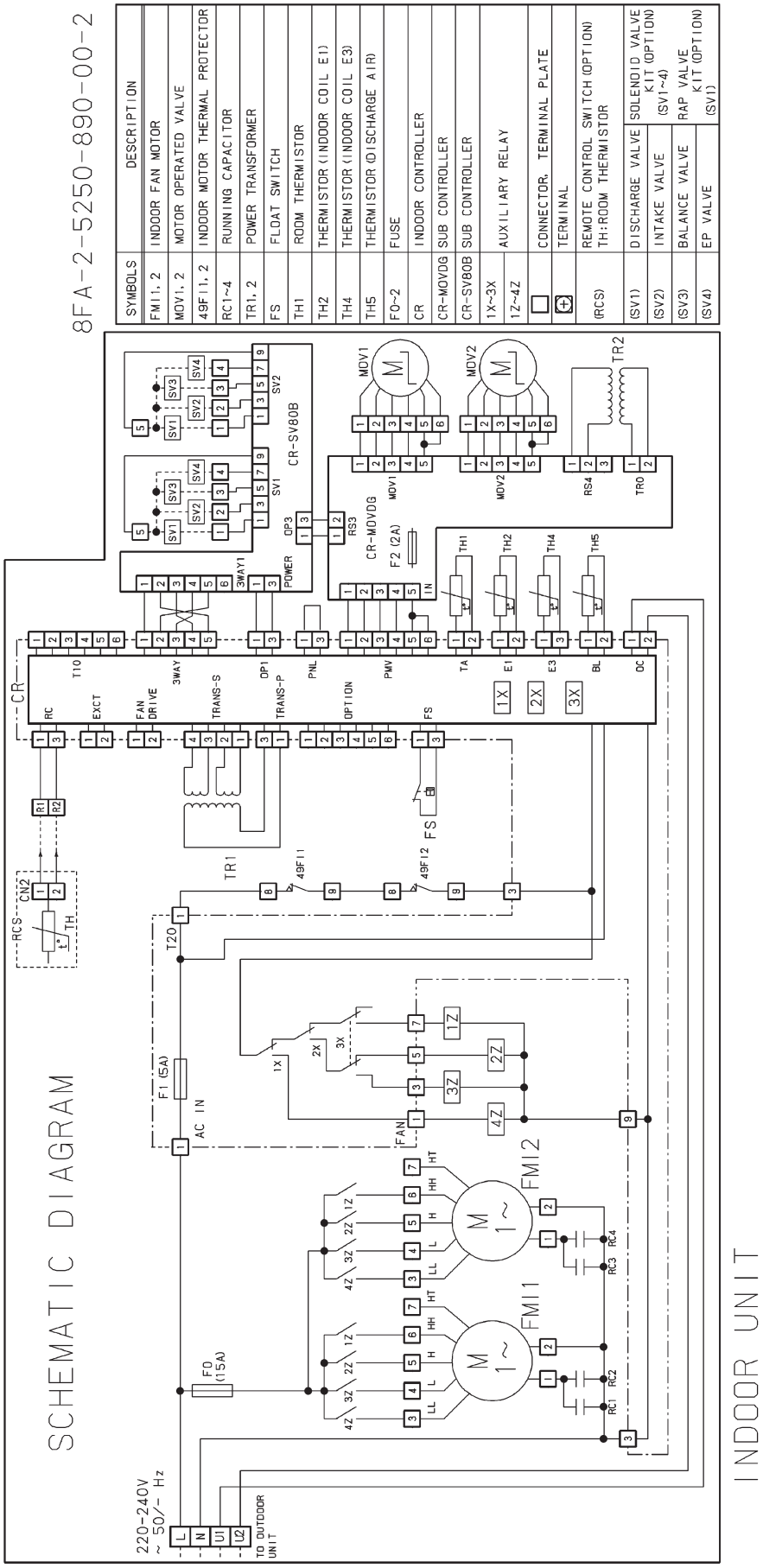

2. Indoor Unit

(11) Electric Wiring Diagram S-22MP1E5/28MP1E5/36MP1E5/45MP1E5/56MP1E5/71MP1E5

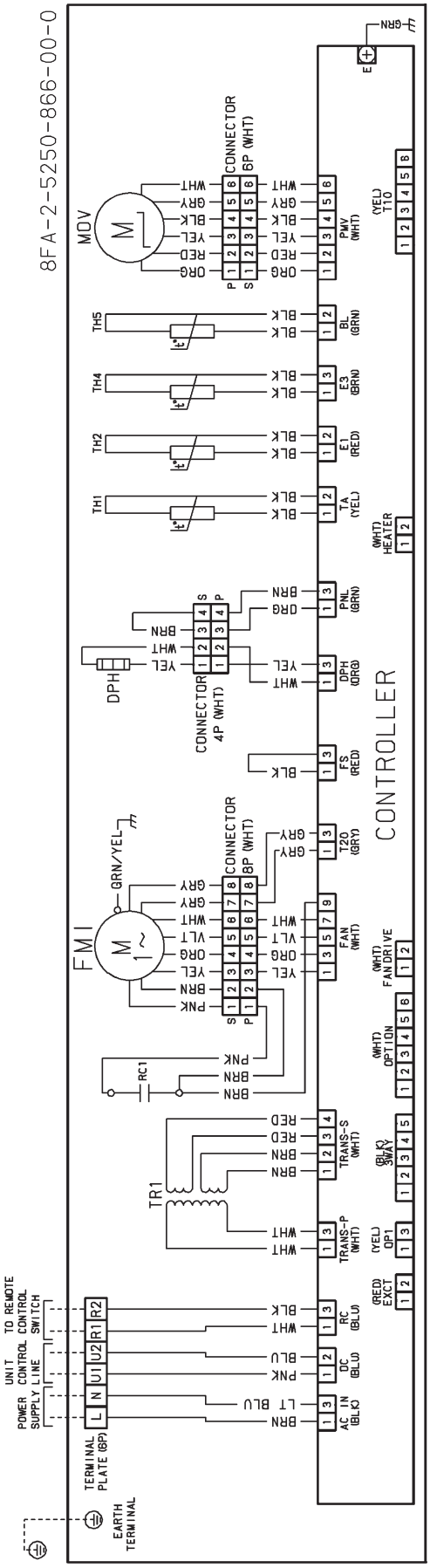

2. Indoor Unit

Schematic Diagram S-22MP1E5/28MP1E5/36MP1E5/45MP1E5/56MP1E5/71MP1E5

8FA-2-5250-866-00-0

SYMBOLS	DESCRIPTION
FMI	INDOOR FAN MOTOR
MOV	MOTOR OPERATED VALVE
49FI	INDOOR MOTOR THERMAL PROTECTOR
RC1	RUNNING CAPACITOR
TR1	POWER TRANSFORMER
DPH	DEW PROOF HEATER
TH1	ROOM THERMISTOR
TH2	THERMISTOR (INDOOR COIL E1)
TH4	THERMISTOR (INDOOR COIL E3)
TH5	THERMISTOR (DISCHARGE AIR)
F1	FUSE
1X~3X	AUXILIARY RELAY
RY2	
CR	INDOOR CONTROLLER
(RCS)	REMOTE CONTROL SWITCH (OPTION)
	TH:ROOM THERMISTOR
	CONNECTOR, TERMINAL PLATE
	TERMINAL

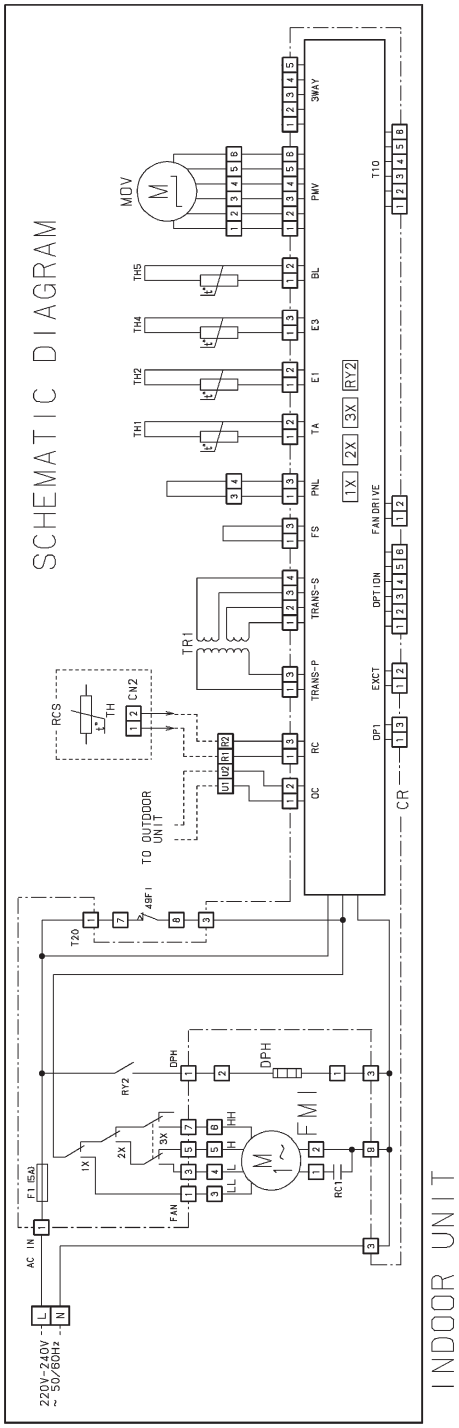

2. Indoor Unit

(12) Electric Wiring Diagram S-22MR1E5/28MR1E5/36MR1E5/45MR1E5/56MR1E5/71MR1E5

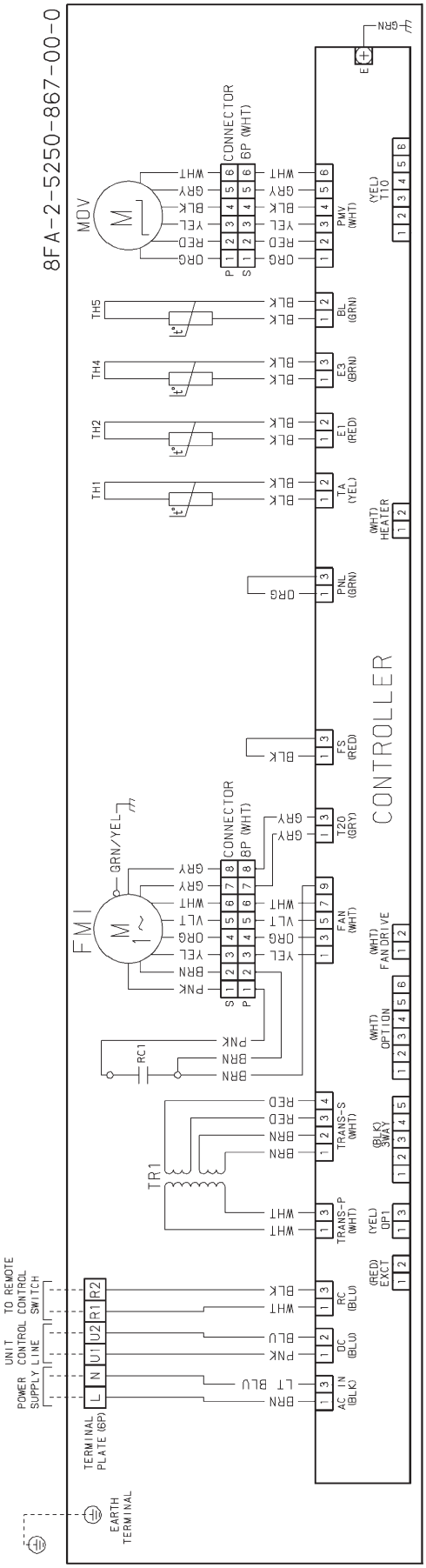

2. Indoor Unit

Schematic Diagram S-22MR1E5/28MR1E5/36MR1E5/45MR1E5/56MR1E5/71MR1E5

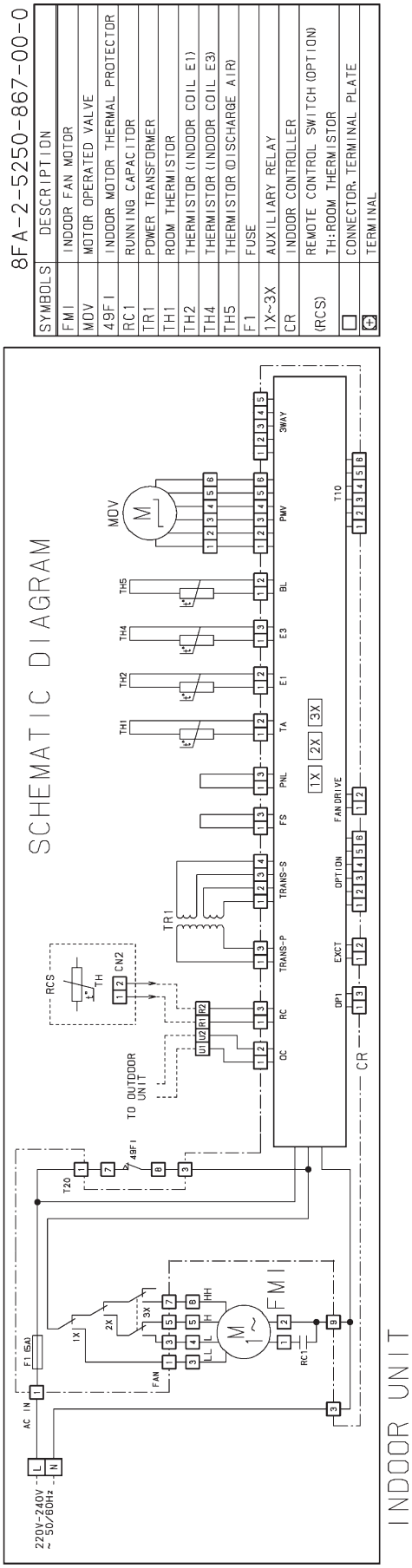

Contents

7. PCB AND FUNCTIONS

1. Outdoor Unit Control PCB 7-2
1-1. Outdoor Unit Control PCB A747035 7-2
1-2. Outdoor Unit HIC PCB A747038 7-3
1-3. Outdoor Unit HIC PCB A747036 7-3
1-4. Outdoor Unit FIL PCB A747039 7-4
1-5. Outdoor Unit FIL PCB A747037 7-4
1-6. Functions (for A747035) 7-5
2. Indoor Unit Control PCB Switches and Functions 7-8
2-1. For AC Fan Motor (CR-UXRP71B-P / F1, R1, P1 and E1 types) 7-9
2-2. For AC Fan Motor (CR-UXRP71B-PE / L1 type) 7-9
2-3. For DC Fan Motor (CR-SXRP56B-B / T1 and D1 types) 7-10
2-4. Only for 4-Way cassette (CR-SX80EQ / U1 type) 7-10
2-5. Only for 4-Way cassette 60×60 (CR-XM075XH, POW-XM075XH / Y1 type and CR-22MY2E5, POW-22MY2E5 / Y2 type) 7-11
2-6. Slim Low Static Ducted (CB-15MM1E5 / S-15MM1E5) (CB-US075XH / S-22MM1E5/28MM1E5/36MM1E5/ 45MM1E5/56MM1E5) 7-12
2-7. CR1 (for CR-K075XH / S-22MK1E5 / 28MK1E5 / 36MK1E5) (Wall Mounted) CR1 (for CR-22MK2E5 / S-22MK2E5 / 28MK2E5 / 36MK2E5) (Wall Mounted) 7-13
2-8. CR1 (for CR-K186XH / S-45MK1E5 / 56MK1E5 / 73MK1E5 / 106MK1E5) (Wall Mounted) 7-14
2-9. Only for 4-Way cassette (F746802 / U1 type) 7-15
2-10. Only for Low Silhouette Ducted (F746803 / F2 type) 7-15

1. Outdoor Unit Control PCB

1-1. Outdoor Unit Control PCB A747035

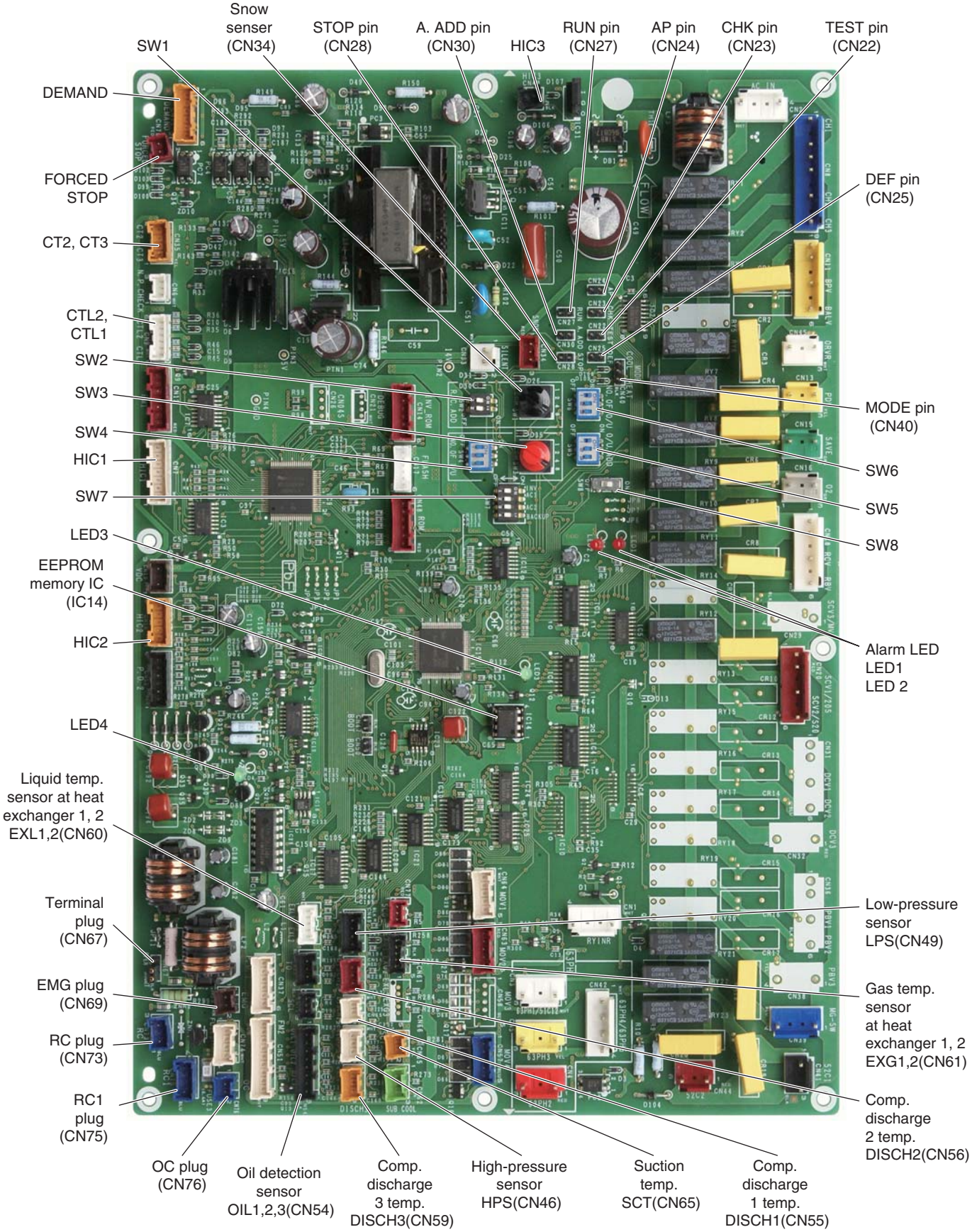

1. Outdoor Unit Control PCB

1-2. Outdoor Unit HIC PCB A747038

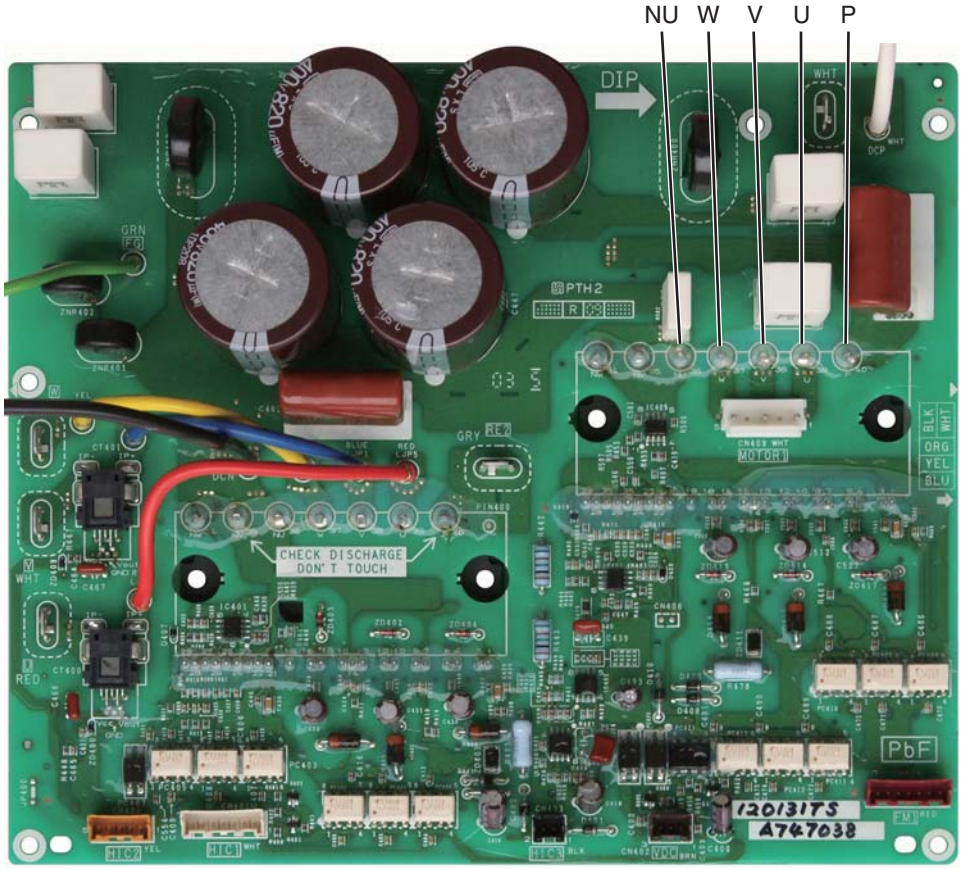

1-3. Outdoor Unit HIC PCB A747036

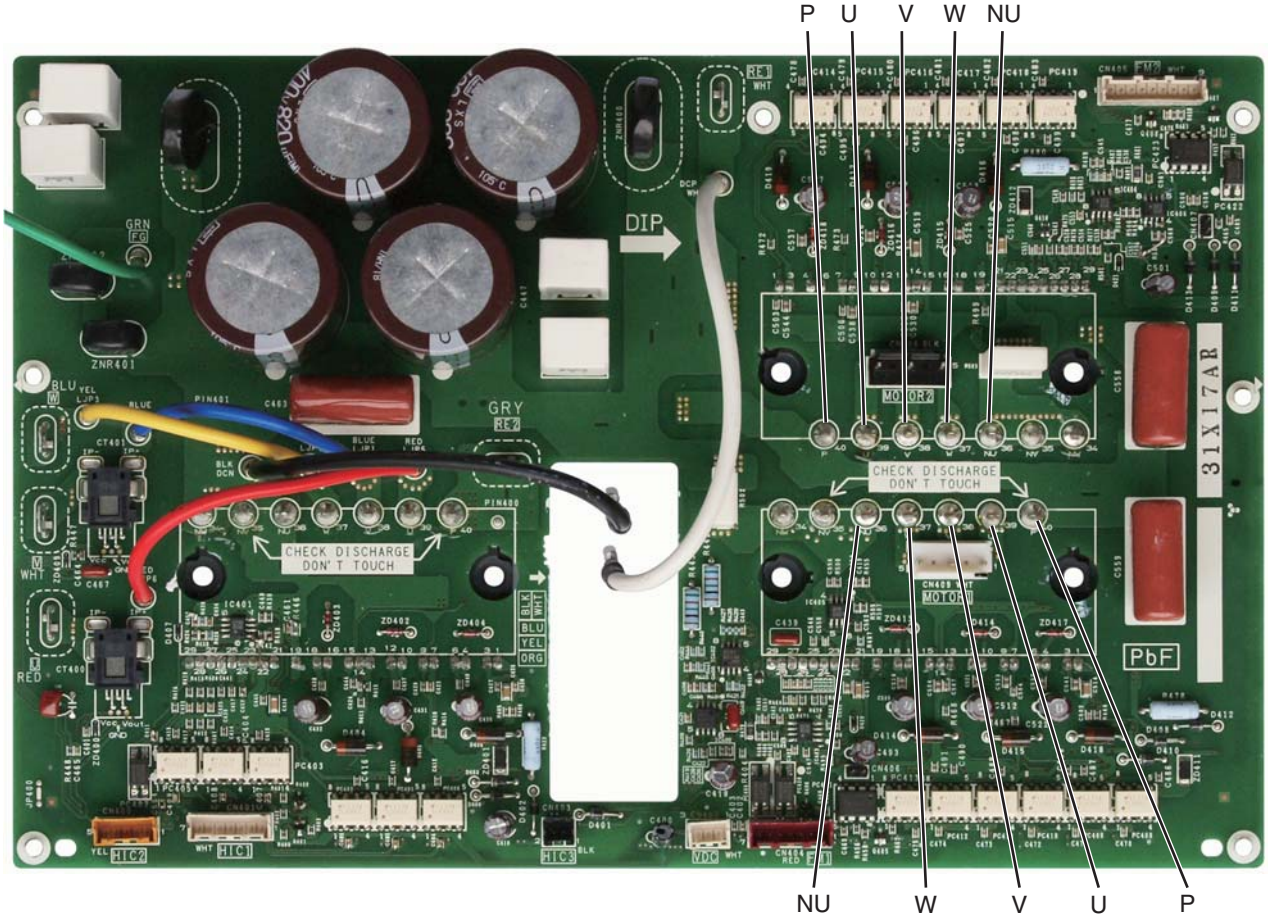

1. Outdoor Unit Control PCB

1-4. Outdoor Unit FIL PCB A747039

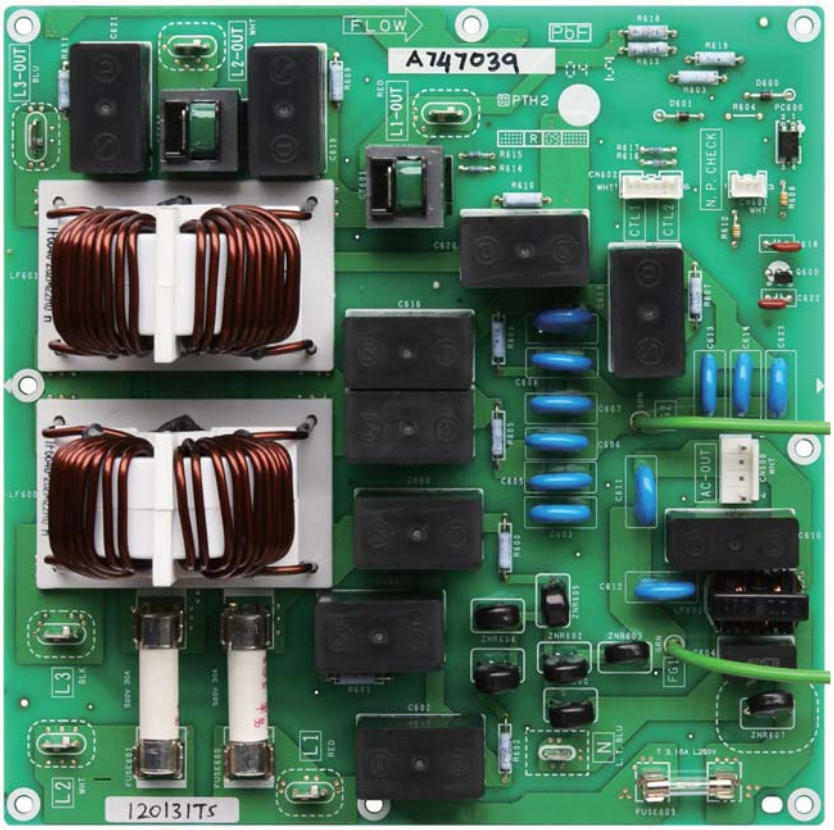

1-5. Outdoor Unit FIL PCB A747037

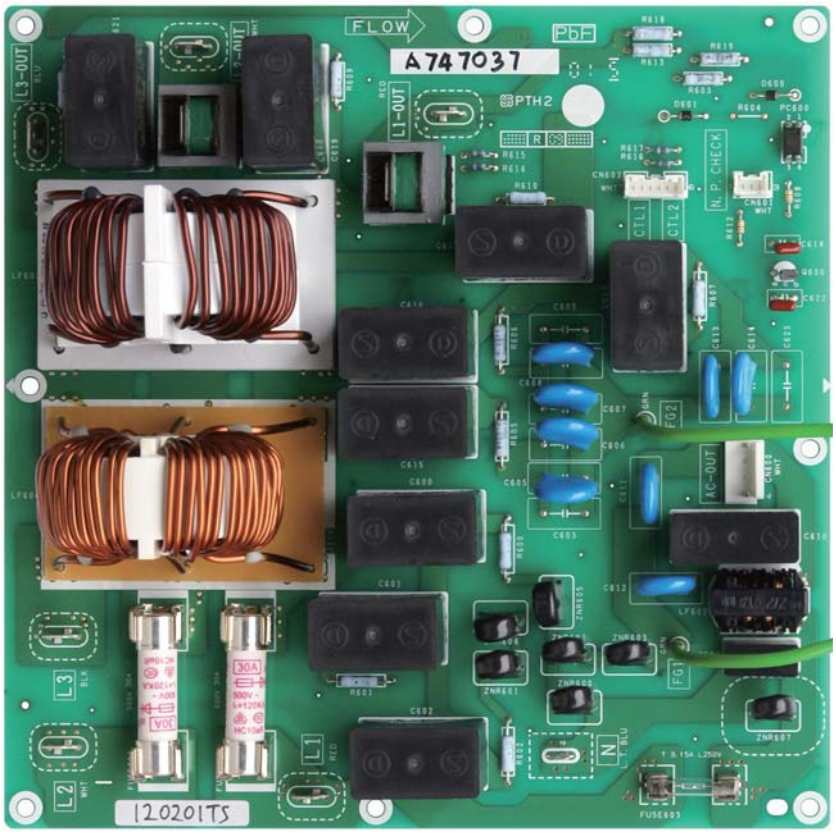

1. Outdoor Unit Control PCB

1-6. Functions (for A747035)

Automatic address setting (CN30)	2P plug (white): Automatic address setting pin • Short-circuit this pin for 1 second or longer to automatically set the addresses at the indoor units that are connected to that outdoor unit and are within the same system. • The system address is "1" at the time of shipment. Automatic address setting is necessary even for communications lines in a single system where the inter-unit control wiring does not cross to any other systems. • While automatic address setting is in progress, the 2 LEDs (LED1, 2: red) on the outdoor unit control PCB blink alternately. (Short-circuiting this pin while automatic address setting is in progress will stop the automatic address setting operation.)
SW1	Rotary switch (10 positions, black): Outdoor system address setting switch • The setting is "1" at the time of shipment. It is not necessary to change the setting if wiring is connected only to an outdoor unit and indoor units in a single system and the inter-unit control wiring does not cross multiple systems. • If wiring links the inter-unit control wiring for multiple systems to the same communications lines, then a different address must be set for each refrigerant tubing system. • If wiring links multiple systems, a maximum of 30 systems (up to 64 indoor units) can be connected. This setting can be set up to "39," however control will be for 30 systems even if the setting is set to higher than 30. An alarm will be displayed if system addresses are duplicated. (For details, refer to Table 7-1.)
SW2	DIP switch (2P, black): Switches for setting system address 10s digit and 20s digit • If 10 systems or more are set, the setting is made by a combination of this DIP switch and S002. • If 10 - 19 systems are set, set switch 1 (10s digit) to ON. • If 20 - 29 systems are set, set switch 2 (20s digit) to ON, and set switch 1 (10s digit) to OFF. • If 30 systems are set, set both switch 1 (10s digit) and switch 2 (20s digit) to ON. (For details concerning S002 and S003, refer to Table 7-1.)
SW3	Rotary switch (10 positions, red): Switch for setting the number of connected indoor units. In order to allow the outdoor unit to manage indoor units in the same refrigerant system, set the number of connected indoor units. (For details, refer to Table 7-2.)
SW4	DIP switch (3P, blue): Switches for setting the 10s, 20s, and 30s digit for the number of connected indoor units • If 10 systems or more are set, the setting is made by a combination of this DIP switch and S004. • If 10 - 19 systems are set, set only switch 1 (10s digit) to ON. • If 20 - 29 systems are set, set switch 2 (20s digit) to ON, and set switch 1 (10s digit) to OFF. • If 30 - 39 systems are set, set only switch 3 (30s digit) to ON. (For details concerning S004 and S005, refer to Table 7-2.)
SW5	DIP switch (3P, blue): Switch for setting the number of outdoor units • Turn the switches ON according to the number of outdoor units (1 - 4). (For details, refer to Table 7-3.)
SW6	DIP switch (3P, blue): Unit No. setting switch • The setting is "1" at the time of shipment. (For details, refer to Table 7-4.)
SW7	DIP switch (4P, black): Backup operation switch If an INV compressor has malfunctioned, turn CT1 ON and Back Up SW ON to operate the outdoor unit using only the constant-speed compressor. If a constant-speed compressor has malfunctioned, turn CT2 ON and Back Up SW ON to operate the outdoor unit using only the INV compressor. (Disconnect the wiring from the constant-speed compressor.)

1. Outdoor Unit Control PCB

Terminal plug (CN67)	3P plug (black): For communications circuit impedance matching • A connecting socket (3P, black) is attached to the terminal plug at the time of shipment from the factory. • In the case of link wiring which combines the inter-unit control wiring for multiple systems into a single communications circuit, leave the connecting socket in place at only one of the outdoor units, and move the socket from the "SHORT" side to the "OPEN" side at all other outdoor units. If multiple connecting sockets are left in place, communications trouble will occur.
LED1, 2	LED (red × 2) • LED 1 and 2 blink alternately while automatic address setting is in progress. • Display the alarm contents for alarms which were detected by the outdoor unit.
Power LED LED4	LED (green): Power indicator Indicates the DC 5V power on the outdoor unit control PCB.
Run (CN27)	2P plug (black): Start pin Short-circuit this pin and apply a pulse signal to start all indoor units in that refrigerant system.
Stop (CN28)	2P plug (black): Stop pin Short-circuit this pin and apply a pulse signal to stop all indoor units in that refrigerant system.
AP (CN24)	2P plug (black): Vacuuming pin • To perform vacuuming of the outdoor unit, short-circuit this pin and then turn the power ON. All solenoid valves turn ON and vacuuming begins smoothly. (Do not perform automatic address setting at this time.) • Release the short-circuit to return the unit to normal status.
Mode (CN40)	2P plug (black): Indoor unit Heating/Cooling mode change pin • During the summer season, short-circuit this pin in the cooling mode. Then, perform automatic address setting. When automatic address setting is completed, release the short-circuit to return the unit to normal status. • When heating mode is short-circuited, heating operation can be used. • When cooling mode is short-circuited, cooling operation can be used.
Test (CN22)	2P plug (black) • This pin is used to test the PCB at the factory. • When the power is turned ON after this pin has been short-circuited, all output signals will be output in sequence. (Sequential output does not occur if this pin is short-circuited when the power is already ON.) Releasing this pin returns the unit to normal control.

1. Outdoor Unit Control PCB

Table 7-1.
Setting the System Address
[SW1: Rotary switch (black), SW2: 2P DIP (black)]

	Outdoor system address	SW1 setting	SW2 setting	
			1P (10s digit)	2P (20s digit)
1 refrigerant system only	1	0	OFF	OFF
Link wiring	1	1	OFF	OFF
	2	2	OFF	OFF
	3	3	OFF	OFF
	4	4	OFF	OFF
	5	5	OFF	OFF
	6	6	OFF	OFF
	7	7	OFF	OFF
	8	8	OFF	OFF
	9	9	OFF	OFF
	10	0	ON	OFF
	11	1	ON	OFF
	12	2	ON	OFF
	13	3	ON	OFF
	14	4	ON	OFF
	15	5	ON	OFF
	16	6	ON	OFF
	17	7	ON	OFF
	18	8	ON	OFF
	19	9	ON	OFF
Link wiring	20	0	OFF	ON
	21	1	OFF	ON
	22	2	OFF	ON
	23	3	OFF	ON
	24	4	OFF	ON
	25	5	OFF	ON
	26	6	OFF	ON
	27	7	OFF	ON
	28	8	OFF	ON
	29	9	OFF	ON
	30	0	ON	ON

Table 7-2.
Setting the Number of Indoor Units
[SW3: Rotary switch (red), SW4: 3P DIP (blue)]

Number of Indoor Units	SW3 Setting	SW4 Setting		
		1	2	3
1	1	OFF	OFF	OFF
2	2	OFF	OFF	OFF
3	3	OFF	OFF	OFF
9	9	OFF	OFF	OFF
10	0	ON	OFF	OFF
11	1	ON	OFF	OFF
19	9	ON	OFF	OFF
20	0	OFF	ON	OFF
21	1	OFF	ON	OFF
29	9	OFF	ON	OFF
30	0	OFF	OFF	ON
31	1	OFF	OFF	ON
39	9	OFF	OFF	ON
40	0	ON	OFF	ON
41	1	ON	OFF	ON
49	9	ON	OFF	ON
50	0	OFF	ON	ON
51	1	OFF	ON	ON
59	9	OFF	ON	ON
60	0	ON	ON	ON
61	1	ON	ON	ON
62	2	ON	ON	ON
63	3	ON	ON	ON
64	4	ON	ON	ON

Table 7-3.
Setting the Number of Outdoor Units
[SW5: DIP switch (blue)]

Number of Indoor Units	SW5 Setting		
	1	2	3
1	ON	OFF	OFF
2	OFF	ON	OFF
3	ON	ON	OFF
4	OFF	OFF	ON

Table 7-4.
Setting the Outdoor Unit address

Outdoor Unit Address	SW6 Setting		
	1	2	3
1	ON	OFF	OFF
2	OFF	ON	OFF
3	ON	ON	OFF
4	OFF	OFF	ON

2. Indoor Unit Control PCB Switches and Functions

Indoor Unit Control PCB Switches and Functions

Indoor unit control PCB

T10: (CN061) **6P plug (yellow):** Used for remote control. (Refer to the remote control section.)
Control items: (1) Start/stop input (2) Remote controller prohibit input
(3) Start signal output (4) Alarm signal output

EXCT: (CN073) **2P plug (red):** Can be used for demand control. When input is present, forces the unit to operate with the thermostat OFF.

DISP: (CN072) (CN063) **2P plug (white):** Short-circuiting this plug allows the unit to be operated by the remote controller, even if it is not connected to an outdoor unit.
(In this case, alarm "E04," which indicates trouble in the serial communication between the indoor and outdoor unit, does not occur.)

CHK: (CN071) (CN062) **2P plug (white):** Test pin. Short-circuiting this pin allows the indoor FM (H fan speed), drain pump, flap motor (F1 position), and electronic expansion valve full-open position to be checked.
However this function turns OFF if the indoor unit protection mechanism is activated.
The unit can be operated even if the remote controller and outdoor unit are not connected.
However even if the remote controller cannot is connected, it cannot be used to operate the unit.
This function can be used for short-term tests.

JP1: (J001) **Jumper wire:** Allows selection of the T10 terminal start/stop signal. (Refer to the remote control section.)
Status at shipment : Pulse signal
Jumper wire cut : Static signal (continuous signal)

FAN DRIVE (CN032) **2P plug (white):** This terminal sends a signal to the ventilation fan when the FAN button on the wired remote controller is used to operate a commercially-available ventilation fan.
(Refer to the remote control section.)
Use a ventilation fan which can accept no-voltage A contact as the external input signal.

Power LED: (D002) **LED (red):** Illuminates when power is supplied. Blinks when there is a failure in the EEPROM (IC10: nonvolatile memory).

EEPROM: (IC010) **Nonvolatile memory:** Memory which stores the unit type data and other information.
When the PCB is replaced, remove the EEPROM from the old PCB and install it onto the new PCB.
If an IC failure occurs, replace with a new IC which was provided with the service PCB, and set the necessary information from the wired remote controller.
(For the procedure, refer to the servicing technical materials.)

GRL: (CN020)
- For AC fan motor (CR-UXRP71B-P (or CR-UXRP71B-PE) : 3P (yellow))
- For DC fan motor (CR-SXRP56B-B : 5P (blue))

- The indoor unit power terminal plate may be a 7P type, 6P type or may be a 5P type. (Refer to the figure at below.)
  The basic wiring diagram shows the 7P-type terminal plate.
  Therefore the terminal plate may differ from the illustrations.

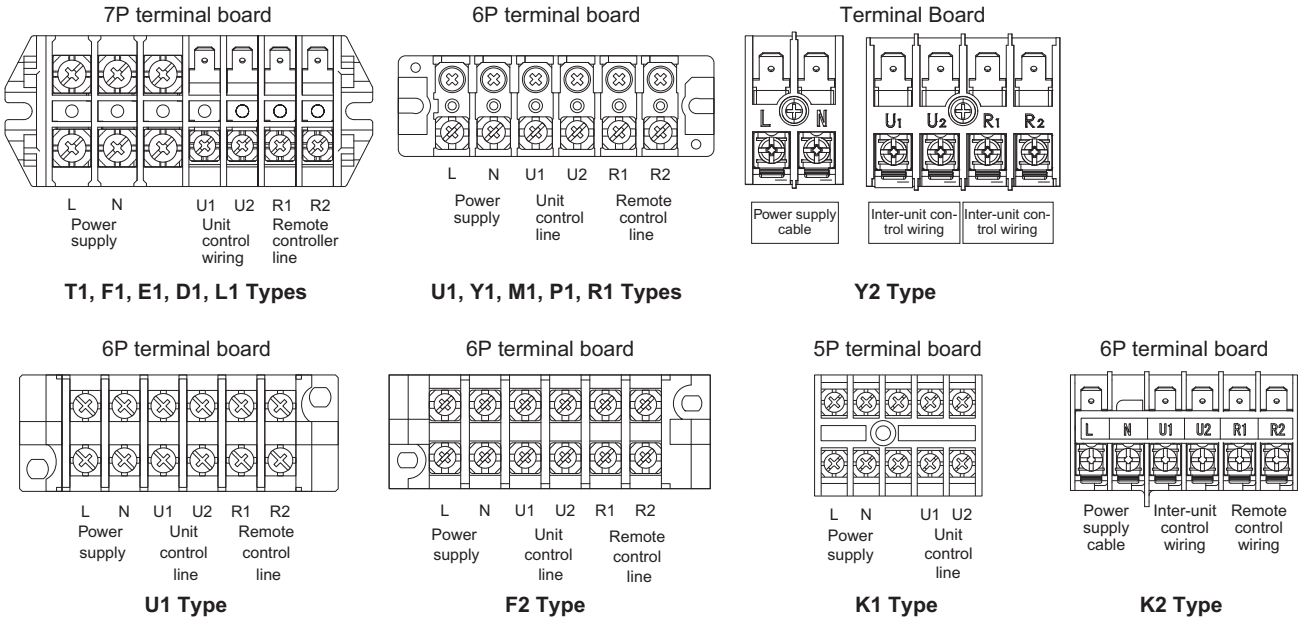

2. Indoor Unit Control PCB Switches and Functions

2-1. For AC Fan Motor (CR-UXRP71B-P/ F1, R1, P1 and E1 types)

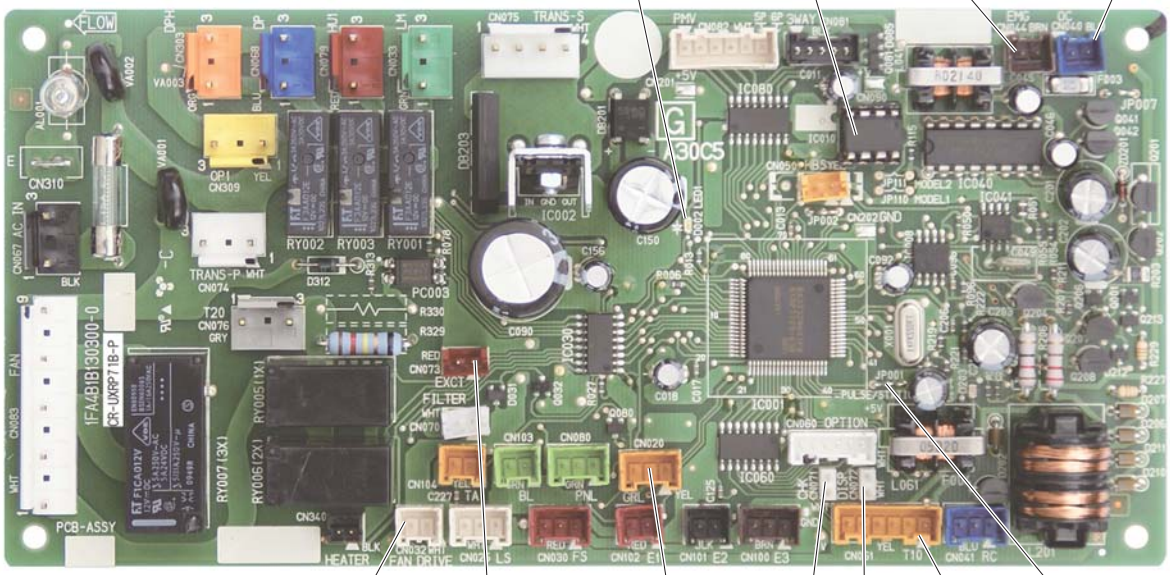

2-2. For AC Fan Motor (CR-UXRP71B-PE/ L1 type)

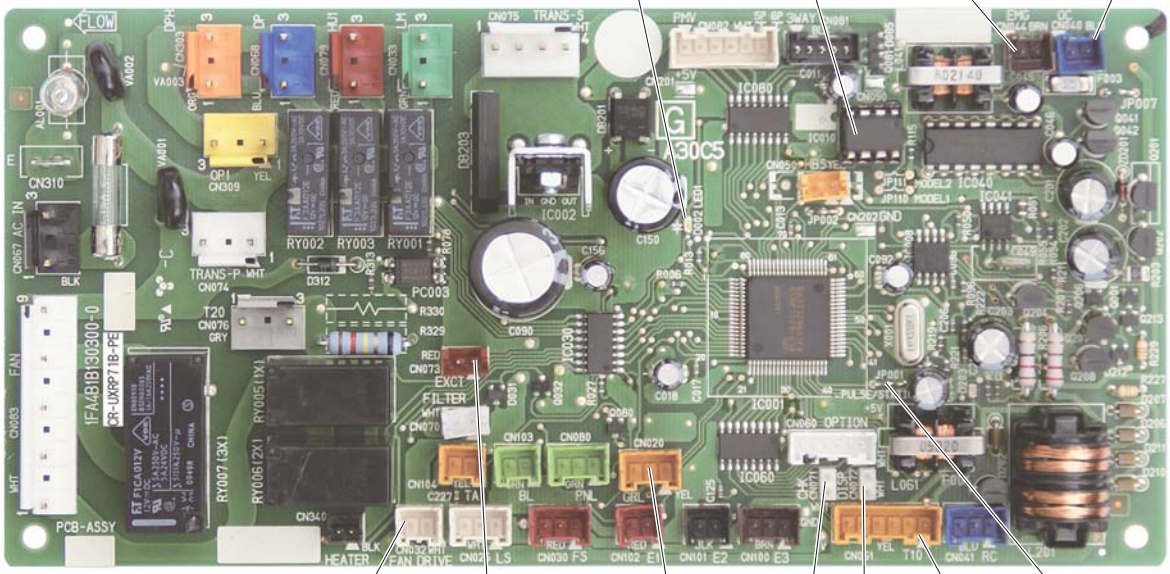

2. Indoor Unit Control PCB Switches and Functions

2-3. For DC Fan Motor (CR-SXRP56B-B/ T1 and D1 types)

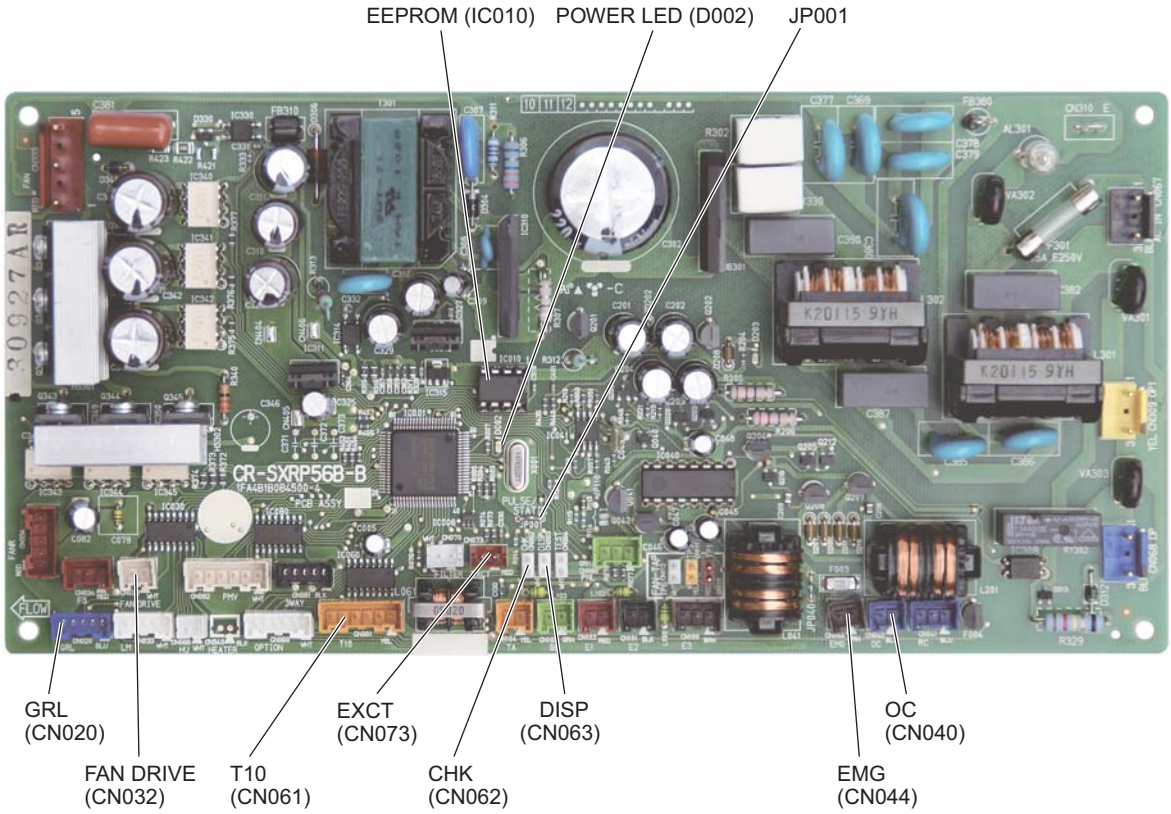

2-4. Only for 4-Way cassette (CR-SX80EQ/ U1 type)

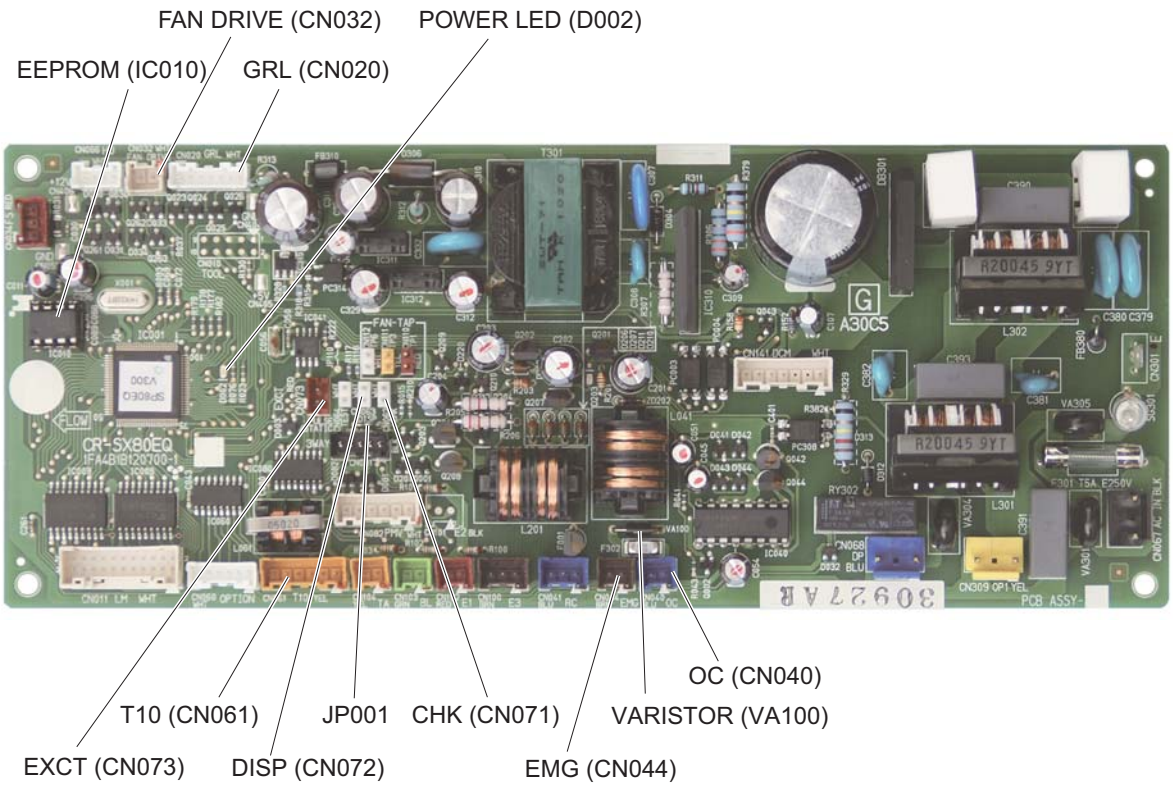

2. Indoor Unit Control PCB Switches and Functions

2-5. Only for 4-Way cassette 60×60
(CR-XM075XH, POW-XM075XH/ Y1 type and CR-22MY2E5, POW-22MY2E5/ Y2 type)

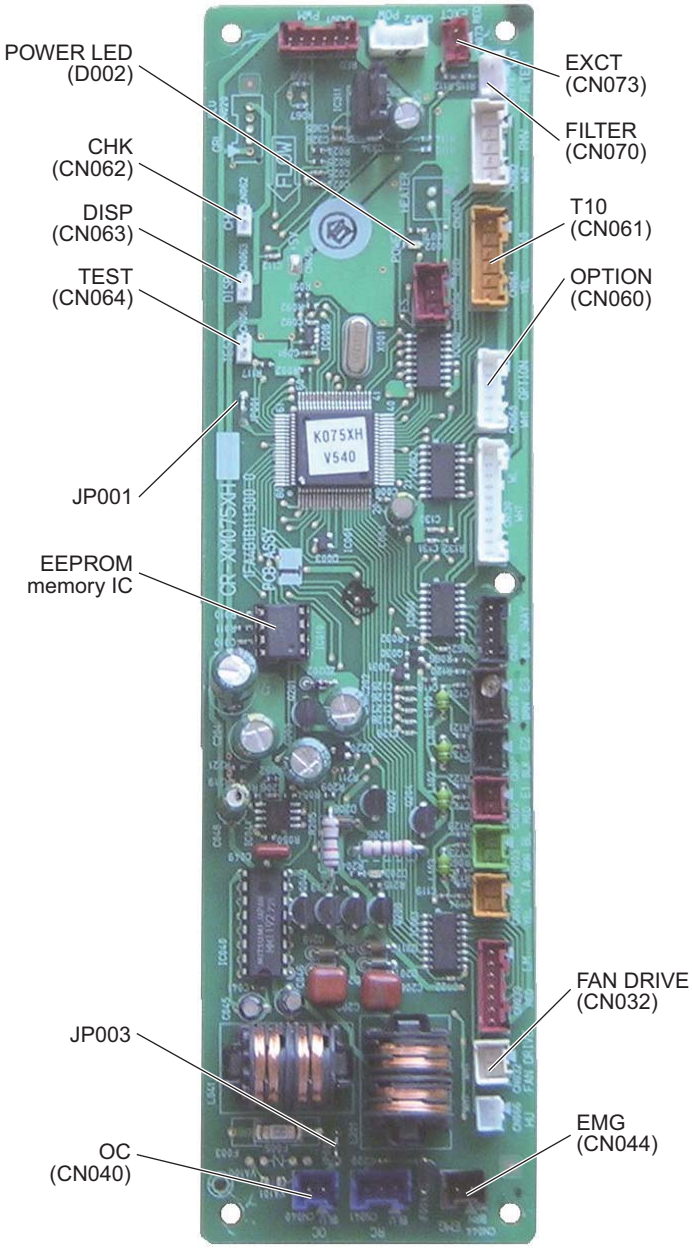

CR-XM075XH
CR-22MY2E5

POW-XM075XH
POW-22MY2E5

2. Indoor Unit Control PCB Switches and Functions

2-6. Slim Low Static Ducted

M1 type : S-15MM1E5
CB-15MM1E51

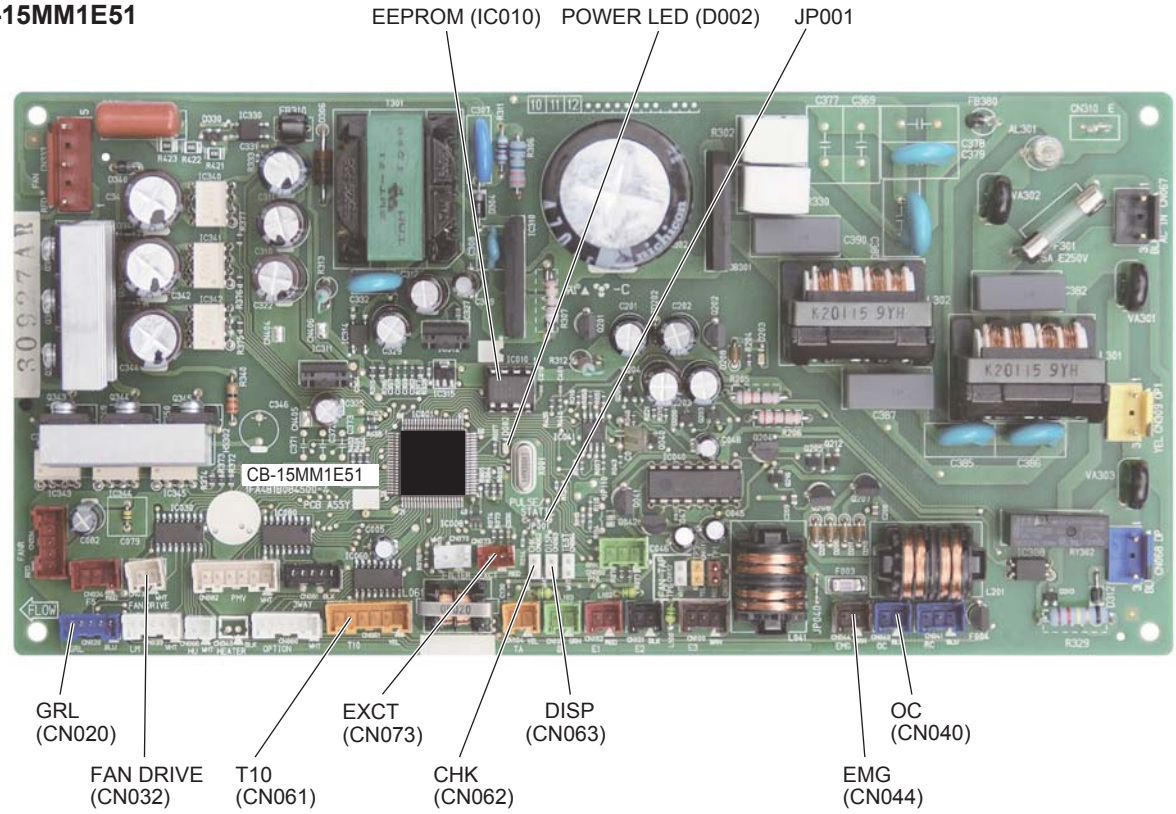

M1 type : S-22～56MM1E5
CB-US075XH

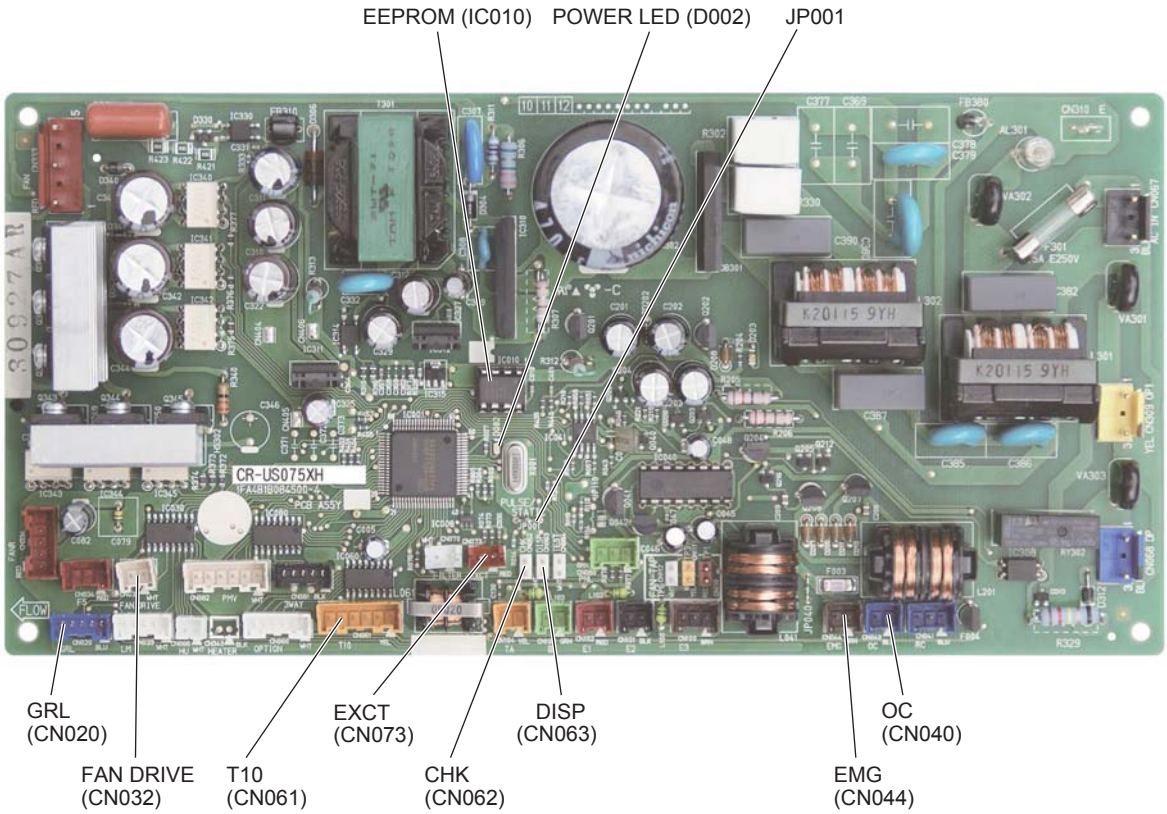

2. Indoor Unit Control PCB Switches and Functions

Indoor Unit Control PCB

2-7. CR1 (for CR-K075XH/S-22MK1E5/28MK1E5/36MK1E5) (Wall Mounted)
CR1 (for CR-22MK2E5/S-22MK2E5/28MK2E5/36MK2E5) (Wall Mounted)

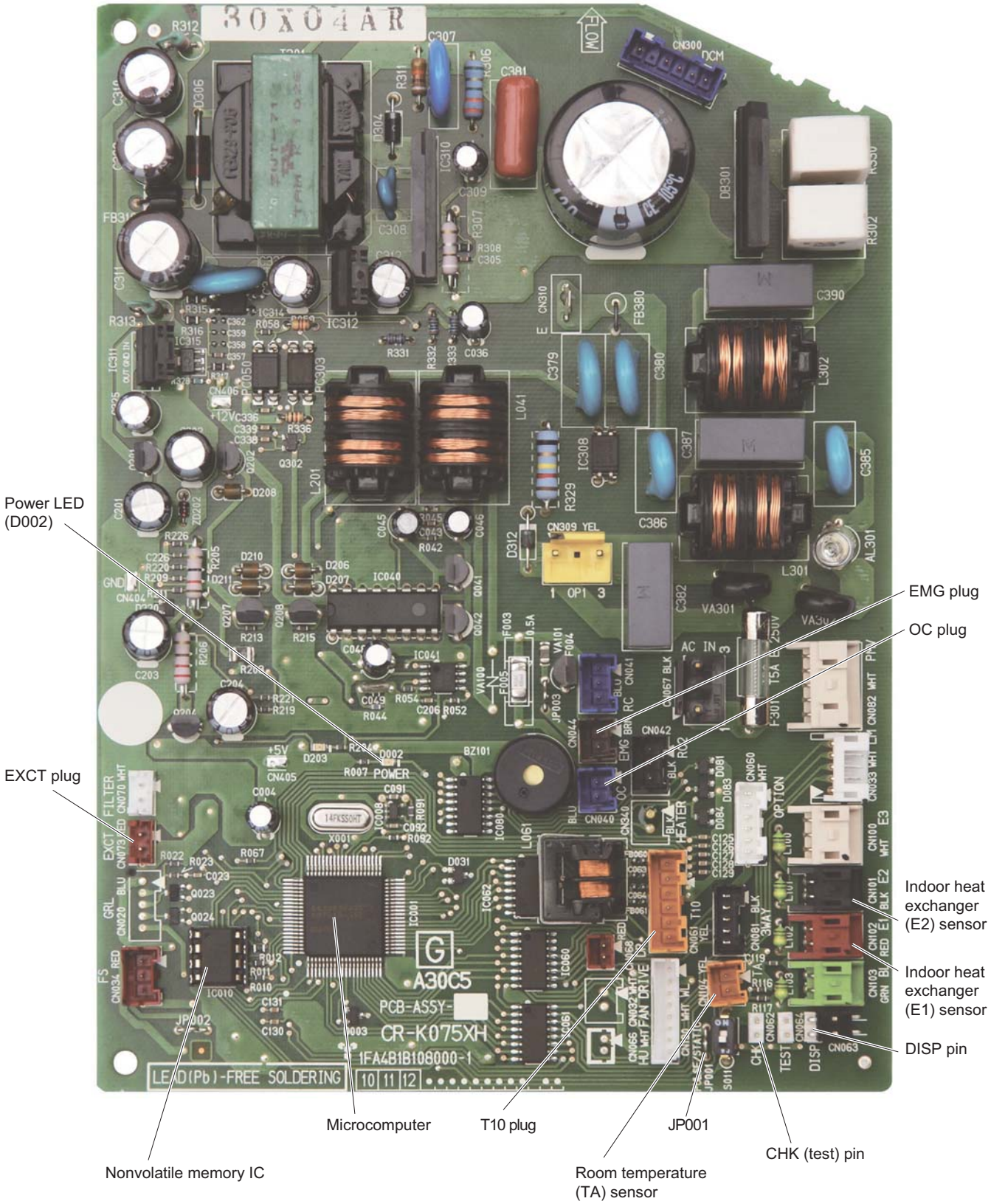

2. Indoor Unit Control PCB Switches and Functions

Indoor Unit Control PCB

2-8. CR1 (for CR-K186XH/S-45MK1E5/56MK1E5/73MK1E5/106MK1E5) (Wall Mounted)

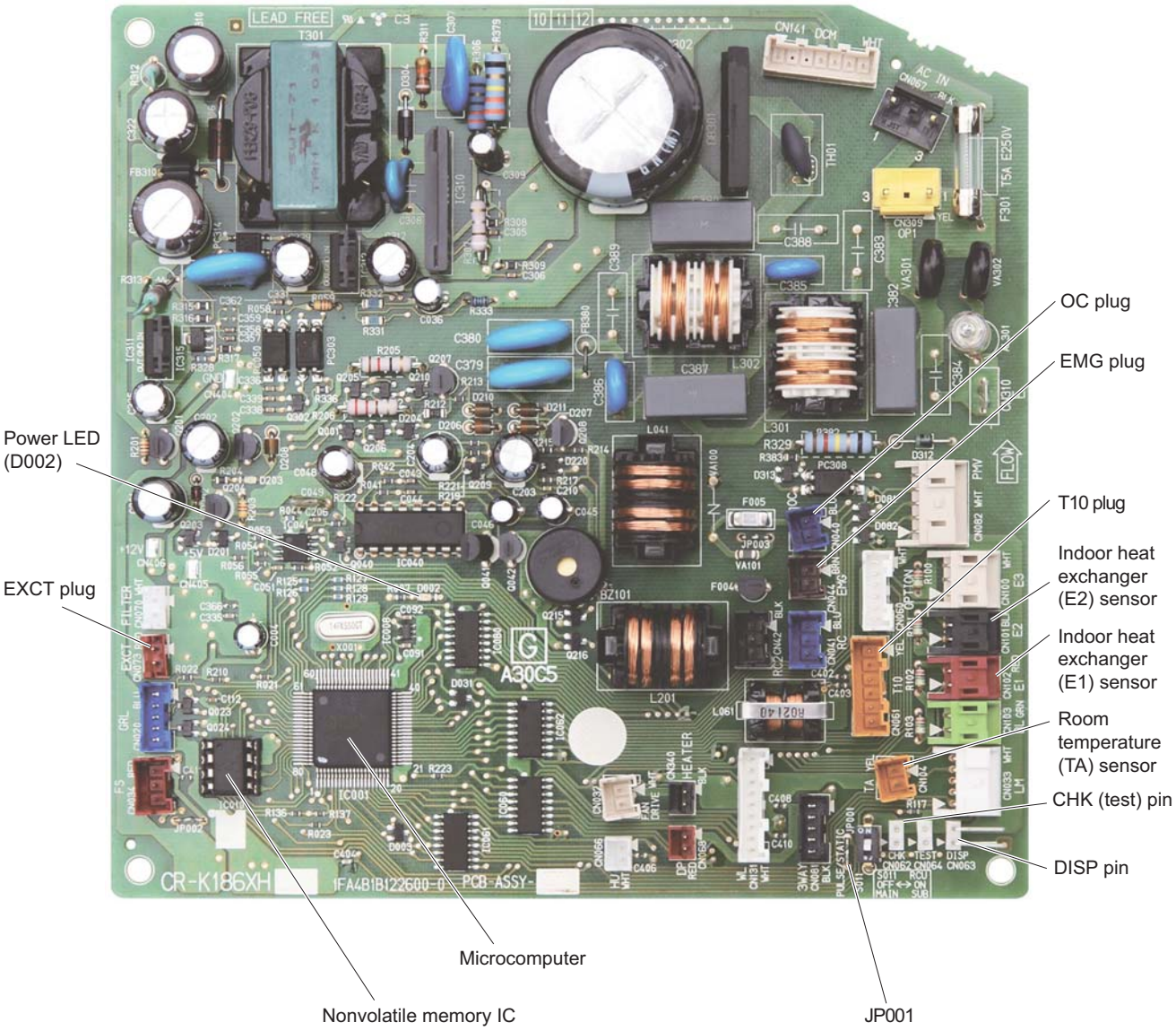

2. Indoor Unit Control PCB Switches and Functions

2-9. Only for 4-Way Cassette (F746802 / U1 type)

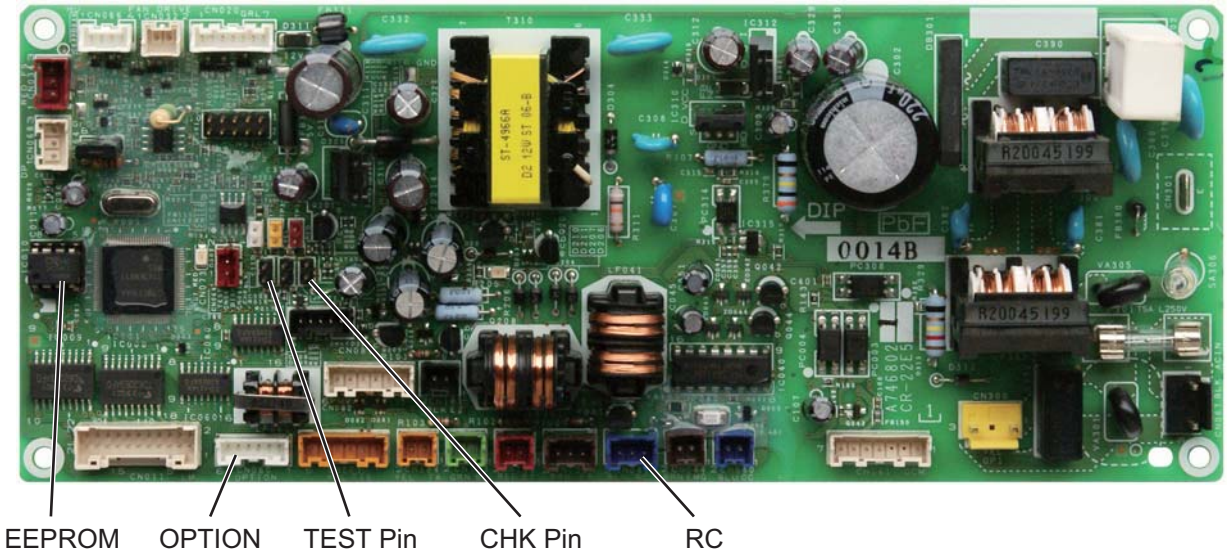

2-10. Only for Low Silhouette Ducted (F746803 / F2 type)

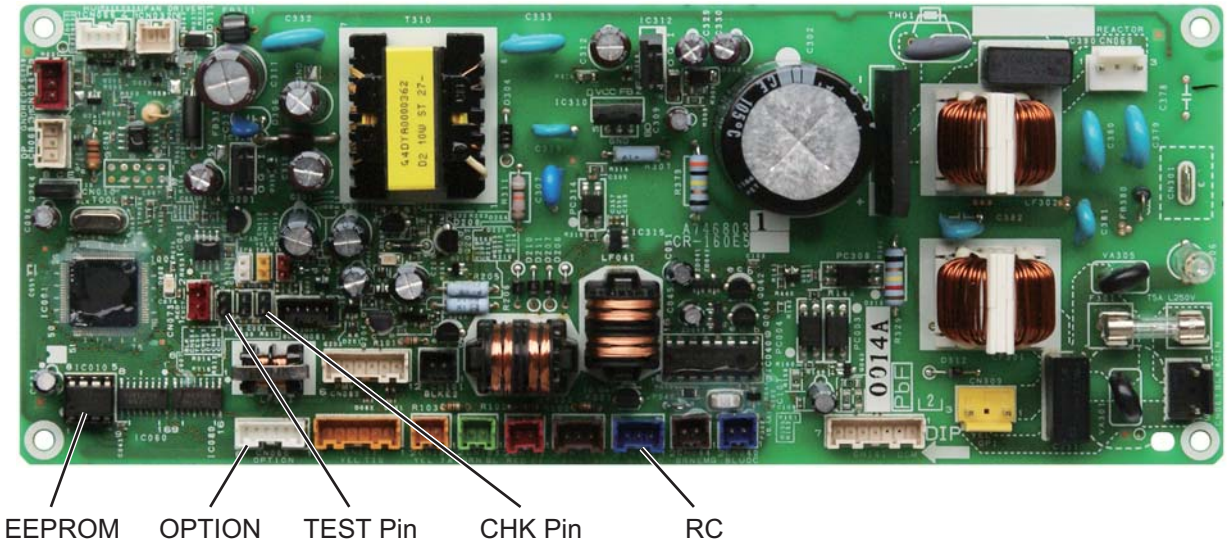

– MEMO –

Contents

8. RENEWAL

1. Precautions on Renewal Design & Installation 8-2
1. General 8-2
2. Basic Points for Using Existing Tubing 8-2
3. VRF Renewal Kit with High-pressure SW Kit and Sight Glass 8-3
4. Procedure for Renewal 8-4
5. Judging Whether Possible to Reuse Existing Tubing: Judgments 1 to 5 8-5
6. Heating Test Run and Cooling Test Run 8-9

2. Reference 8-10
1. Purposes for Attaching VRF Renewal Kit 8-10
2. Type of oil 8-10
3. Oil discoloration 8-10
4. Oil color standards for renewal 8-11
5. Standards for judging refrigerant with sight glass 8-11

3. INSTALLATION INSTRUCTIONS (VRF Renewal Kit) 8-12

1. Precautions on Renewal Design & Installation

1. General

VRF [*1] adopts the refrigerant R410A that has a higher pressure than conventional refrigerants, but it uses high-precision microcomputer control to enable operation at a "design pressure of 3.3 MPa," which is around the same as that before the refrigerant R410A was adopted. This means that you can use refrigerant tubing for R22 [*2].
Furthermore, if certain conditions are satisfied, you can reuse existing tubing by attaching one VRF Renewal Kit (CZ-SLK2) to each outdoor unit.
When performing the work, check the "DESIGN of VRF SYSTEM" section together with this section.

NOTE

*1. Systems for 2WAY VRF (ME1E81series only 8HP ~ 16HP), MINI VRF and 3WAY VRF.
*2. Refrigerant tubing R22 has a maximum working pressure of 3.45 MPa and can be used for refrigerants such as R22 and R407C.

2. Basic Points for Using Existing Tubing

For existing tubing to be reused, the condition of the tubing needs to satisfy the basic points of **"Safety"** and **"Cleanliness"**. First, confirm that the condition of the existing tubing satisfies the following check items.

■ Safety

- The existing unit shall be an air conditioner for use with R22/R407C/R410A refrigerant.
  The reuse of existing tubing and the like that has been used for an application other than air conditioning (refrigerating device, etc.) is prohibited because it is difficult to know the situation.
- The tubing shall not be dented, cracked, corroded, etc.
  Checking whether existing tubing is damaged, dented, and the like and the reliability of tubing strength is the responsibility of the installer performing the installation and is not guaranteed by us.
- The maximum working pressure of branches shall be 3.3 MPa or more. Furthermore, the branches shall be our genuine products.
  We do not guarantee the tubing strength of any branch that is not a genuine product of us.
- The thermal insulation material shall not be decayed and peeling off.
  If there is no thermal insulation installed on the liquid tubing, thermal insulation needs to be installed.

■ Cleanliness

- The oil of the existing unit shall be any one of the following.
  Mineral oil : Suniso, Freol S and MS
  Synthetic fluid : Alkyl benzene-type (HAB, Barrel-freeze), ester-type, ether-type (PVE only)
  If the existing unit is GHP, cleaning of the tubing is required.
- The existing tubing shall be connected to the indoor unit and outdoor unit and be air tight.
  Using tubing that is dirty inside as is may cause a failure of the new equipment.
- Trouble with foreign material contaminating the inside of the tubing shall not have occurred during the period with which the existing unit was used (layer short in compressor, clogging caused by moisture freezing, oxide scale, etc.). If such trouble has occurred, appropriate measures shall have been taken.
  Using tubing that is dirty inside as is may cause a failure of the new equipment.

1. Precautions on Renewal Design & Installation

3. VRF Renewal Kit with High-pressure SW Kit and Sight Glass

The following shows an overview of the VRF Renewal Kit (CZ-SLK2) that is required when existing tubing is reused. If the exact tube length and tube size of the existing tubing are uncertain, attach a sight glass in accordance with the figure below. It will be used for checking the amount of additional refrigerant charge (calculating the amount in Judgment 4).

■ **VRF Renewal Kit: CZ-SLK2**

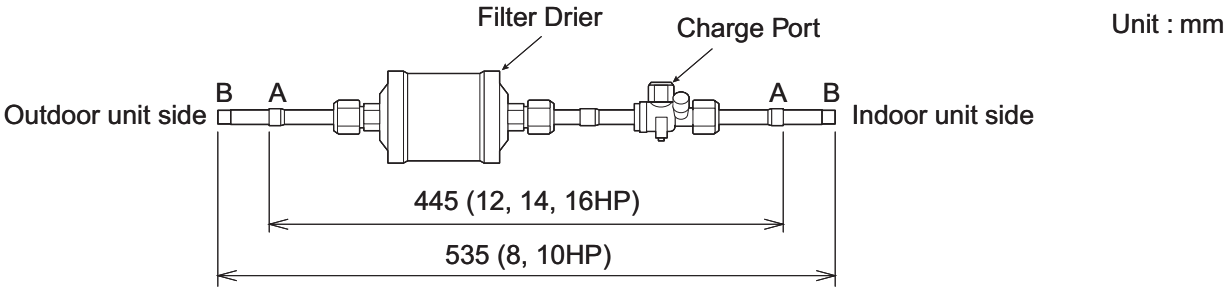

Connecting tube dimensions
A : ø12.7 (12, 14, 16HP)
B : ø9.52 (8, 10HP)

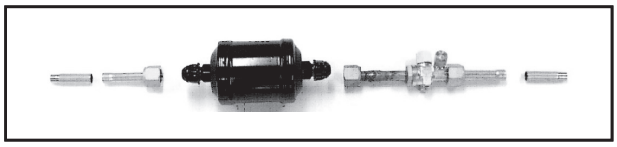

NOTE

If the tube size does not match that of the existing tubing, use a reducer (field supply) to adjust the tube diameter.

■ **Attaching the VRF Renewal Kit, sight glass and High-pressure SW Kit**

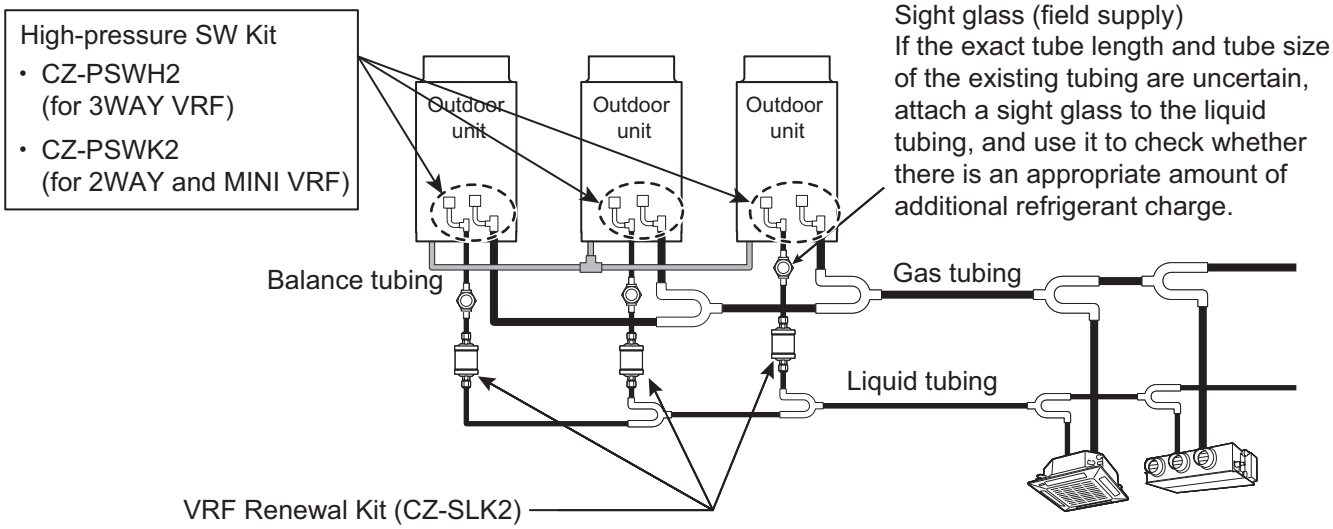

- VRF Renewal Kit (CZ-SLK2) shall be attached to the liquid tubing of all outdoor units.
- High-pressure SW Kit (CZ-PSWK2 or CZ-PSWH2) shall be attached to both liquid and gas tubing of all outdoor units.
- There is no need to remove the VRF Renewal Kit (CZ-SLK2) after a test run is performed because normal operation is possible while it is attached.
- When attaching the VRF Renewal Kit (CZ-SLK2), care shall be taken with regards to the installation location and orientation of the filter drier and ball valve. If a mistake is made, the refrigerant in the system needs to be recovered when the filter drier is replaced, which will make maintenance difficult.
- Thermal insulation material (field supply: heat resistance of 80°C or higher and thickness of 10 mm or greater) shall be applied to the VRF Renewal Kit (CZ-SLK2).
- The filter drier of the VRF Renewal Kit (CZ-SLK2) may need to be replaced depending on the condition of the existing unit. Use a Danfoss DMB 164 as the replacement filter drier.

1. Precautions on Renewal Design & Installation

4. Procedure for Renewal

After checking "2. Basic Points for Using Existing Tubing," perform the work in accordance with the renewal flow below. When performing the work, also check the "DESIGN of VRF SYSTEM" section.

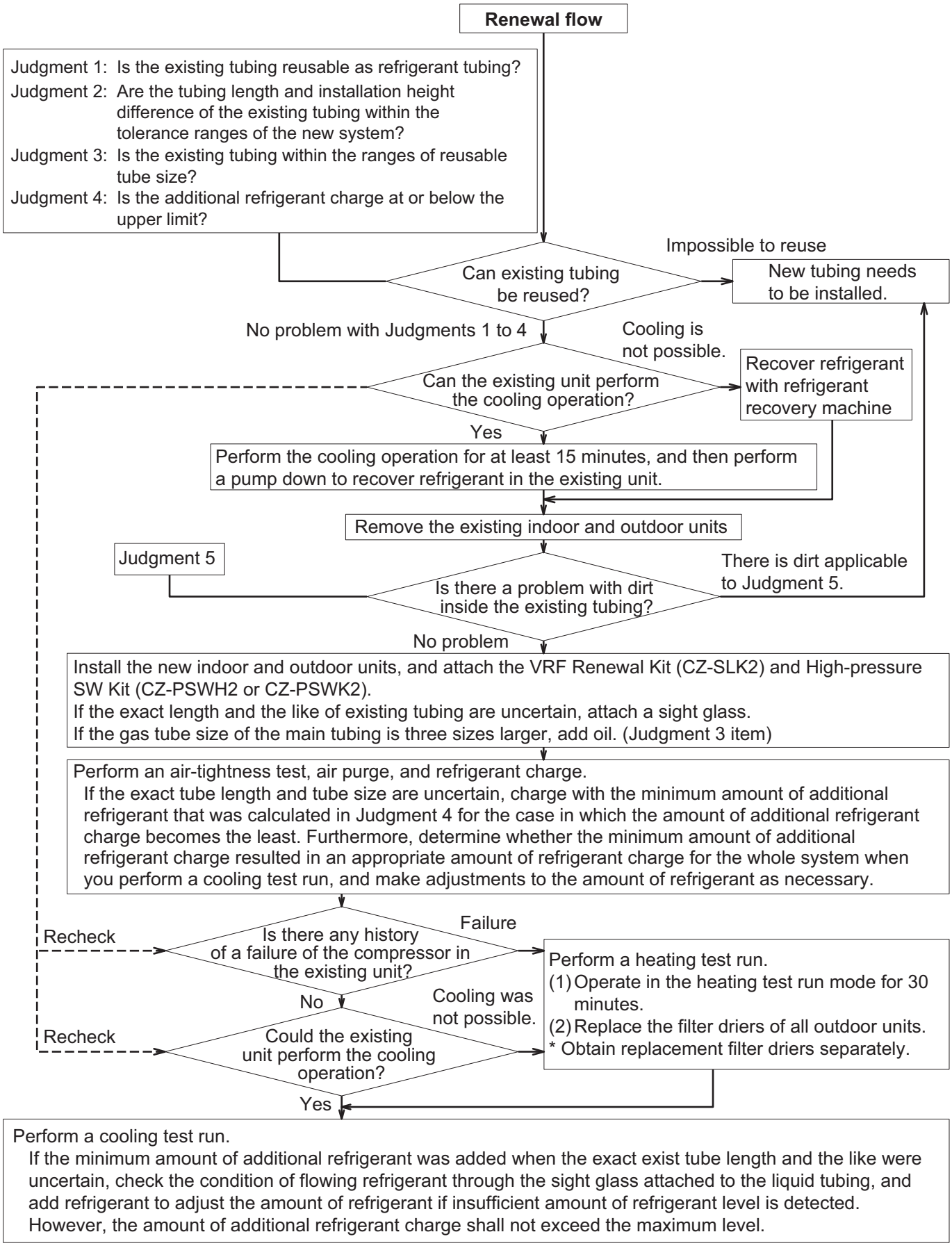

1. Precautions on Renewal Design & Installation

5. Judging Whether Possible to Reuse Existing Tubing: Judgments 1 to 5

It is necessary to check whether the existing tubing satisfies the following Judgments 1 to 5 while referring to the figure below. If the existing tubing does not satisfy the following conditions, new tubing needs to be installed.

Sample Image of Tubing of Existing Unit

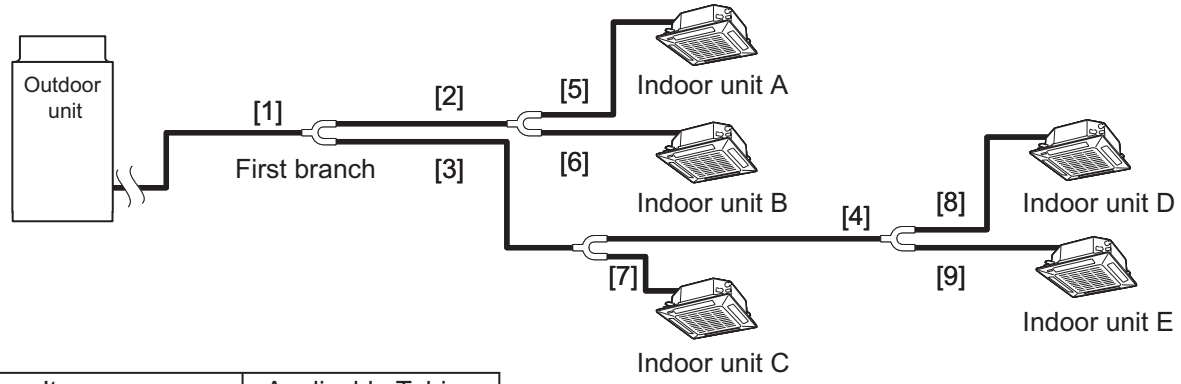

Item	Applicable Tubing
Main tube *1	[1]
Main tube after branch*1	[2][3][4]
Indoor unit connection tube	[5][6][7][8][9]

Fig. 8-1

*1: If a main tube after a branch is the same size as the main tubing, it shall be considered to be a main tubing. For example, if the tube size of [3] is the same as the tube size of [1], the main tubing is [1] + [3].

■ **Judgment 1**
Is the refrigerant tubing reusable?

Check whether the existing refrigerant tubing is reusable (the refrigerant tubing is for R22 or has the same or a higher design pressure than refrigerant tubing for R22). Table 8-1 shows the thickness of reusable refrigerant tubing. Also check the maximum working pressure for branches separately.

Table 8-1 Usable Refrigerant Tubing (JIS B 8607)

Material	O Material					1 /2 H, H Material								
Outer dia. (mm)	6.35	9.52	12.7	15.88	19.05	19.05	22.22	25.4	28.58	31.75	38.1	41.28	44.45	50.8
Thickness (mm)	0.80	0.80	0.80	1.00	1.00	1.00	1.00	1.00	1.00	1.10	1.15	1.20	1.25	1.40

■ **Judgment 2**
Are the tubing length and installation height difference of the existing tubing within the tolerance ranges of the new system?

The refrigerant tubing length and installation height difference must be within the tolerance ranges of the tubing length and installation height difference of the new system.

1. Precautions on Renewal Design & Installation

■ **Judgment 3**

Is the existing tubing within the reusable tube size ranges?

Check whether the tube sizes of the existing refrigerant tubing are within the usable ranges.
Tables 8-2 to 8-4 show the usable tube size ranges for each of the main tubing, main tubing after branches, and indoor unit connection tubing.
The existing tube sizes must be checked to determine whether they are within the ranges in these tables.
Furthermore, extra oil may need to be added depending on the gas tube sizes of the main tubing.

Table 8-2 Usable Tube Size Ranges for Main Tubing [1]

Outdoor Unit HP	Gas Tube (mm)		Liquid Tube (mm)	
	Normal*2	Usable Range	Normal*2	Usable Range
4 HP	15.88	19.05	9.52	9.52 to 12.7
5 HP	15.88	19.05	9.52	9.52 to 12.7
6 HP	19.05	19.05	9.52	9.52 to 12.7
8 HP	19.05	19.05 to 28.58*1	9.52	9.52 to 25.4
10 HP	22.22	22.22 to 31.75*1	9.52	9.52 to 25.4
12 HP	25.4	25.4 to 38.1*1	12.7	12.7 to 25.4
14 HP	25.4	25.4 to 38.1*1	12.7	12.7 to 25.4
16 HP	28.58	28.58 to 41.28*1	12.7	12.7 to 25.4
18 HP	28.58	28.58 to 41.28*1	15.88	15.88 to 25.4
20 HP	28.58	28.58 to 41.28*1	15.88	15.88 to 25.4
22 HP	28.58	28.58 to 41.28*1	15.88	15.88 to 25.4
24 HP	28.58	28.58 to 41.28*1	15.88	15.88 to 25.4
26 HP	31.75	31.75 to 44.45*1	19.05	19.05 to 25.4
28 HP	31.75	31.75 to 44.45*1	19.05	19.05 to 25.4
30 HP	31.75	31.75 to 44.45*1	19.05	19.05 to 25.4
32 HP	31.75	31.75 to 44.45*1	19.05	19.05 to 25.4
34 HP	31.75	31.75 to 44.45*1	19.05	19.05 to 25.4
36 HP	38.1	38.1 to 50.8*1	19.05	19.05 to 25.4
38 HP	38.1	38.1 to 50.8*1	19.05	19.05 to 25.4
40 HP	38.1	38.1 to 50.8*1	19.05	19.05 to 25.4
42 HP	38.1	38.1 to 50.8*1	19.05	19.05 to 25.4
44 HP	38.1	38.1 to 50.8*1	19.05	19.05 to 25.4
46 HP	38.1	38.1 to 50.8*1	19.05	19.05 to 25.4
48 HP	38.1	38.1 to 50.8*1	19.05	19.05 to 25.4

*1: If the gas tube size of the main tubing is three sizes larger than the normal tube size, oil needs to be added. Add 30 cc of oil for each meter of main tubing.

*2: If the main tubing is the same or smaller than the normal tube size, the size needs to be increased.

- If the maximum tube length exceeds 90 m, increase the size of the gas tubing and liquid tubing to one size larger than the normal tube size.
- If the maximum length of the main tubing exceeds 50 m, increase the size of just 50 m of only the gas tubing of the main tubing to one size larger than the normal tube size.

Table 8-3 Usable Tube Size Ranges for Main Tubing after Branches [2][3][4]

Capacity after Branch*3 (kW)	Gas Tube (mm)	Liquid Tube (mm)
Up to 7.0	12.7 to 15.88	9.52 to 9.52
7.1 to 8.9	15.88 to 15.88	9.52 to 9.52
9.0 to 16.0	15.88 to 19.05	9.52 to 9.52
16.1 to 22.4	19.05 to 28.58	9.52 to 12.7
22.5 to 29.9	22.22 to 28.58	9.52 to 12.7
30.0 to 41.9	25.4 to 31.75	12.7 to 15.88
42.0 to 52.3	28.58 to 38.1	12.7 to 15.88
52.4 to 69.9	28.58 to 41.28	15.88 to 19.05
70.0 to 97.9	31.75 to 44.45	19.05 to 22.22
98.0 to 105.9	38.1 to 44.45	19.05 to 22.22
From 106.0	38.1 to 50.8	19.05 to 25.4

*3: How to calculate the capacity after branches
The capacity after a branch is the total capacity of all indoor units connected downstream of that branch.
The following table shows examples of calculating the capacity after branches for the case of Fig.8-1.

Main Tubing after Branches	Capacity after Branches
[2]	Total capacity of A+B
[3]	Total capacity of C+D+E
[4]	Total capacity of D+E

1. Precautions on Renewal Design & Installation

Table 8-4 Usable Tube Size Ranges for Indoor Unit Connection Tubing [5][6][7][8][9]

Indoor Unit HP	Gas Tube (mm)	Liquid Tube (mm)	Indoor Unit HP	Gas Tube (mm)	Liquid Tube (mm)
0.8 HP	12.7 to 12.7	6.35 to 9.52	3.0 HP	15.88 to 15.88	9.52 to 9.52
1.0 HP	12.7 to 12.7	6.35 to 9.52	3.2 HP	15.88 to 19.05	9.52 to 9.52
1.3 HP	12.7 to 12.7	6.35 to 9.52	4.0 HP	15.88 to 19.05	9.52 to 9.52
1.6 HP	12.7 to 15.88	6.35 to 9.52	5.0 HP	15.88 to 19.05	9.52 to 9.52
2.0 HP	12.7 to 15.88	6.35 to 9.52	6.0 HP	15.88 to 19.05	9.52 to 9.52
2.5 HP	15.88 to 15.88	9.52 to 9.52	8.0 HP	19.05 to 25.4	9.52 to 12.7
			10. 0 HP	22.22 to 28.58	9.52 to 12.7

■ **Judgment 4**

Is the additional refrigerant charge at or below the upper limit?

Check that the amount of additional refrigerant charge for the existing refrigerant tubing is at or below the upper limit that is determined from the number of outdoor unit connections.

Calculate the amount of additional refrigerant charge from the liquid tubing size and total tubing length using the same criteria as for standard units (VRF).

Table 8-5 shows the calculation formula for the amount of additional refrigerant charge.

Check the existing liquid tubing size and total tubing length of each size, and calculate the amount of additional refrigerant charge from that result.

Also, check that the calculation result is at or below the upper limit for the amount of additional refrigerant charge determined by the number of outdoor unit connections that is shown in Table 8-6.

- **If the exact tube length and tube size of the existing tubing are uncertain:**
  If the exact tube length and tube size of the existing tubing are uncertain, assume the case in which the amount of additional refrigerant charge becomes the most (liquid tube = thick and tube length = long) and conversely, the case in which the amount of additional refrigerant charge becomes the least (liquid tube = thin and tube length = short), and calculate the amount of additional refrigerant charge for each case. When you determine the amount of refrigerant, the result calculated for the maximum amount of additional refrigerant charge must be at or below the upper limit.
  Furthermore, make sure you calculate the minimum amount of additional refrigerant for the case in which the amount of additional refrigerant charge becomes the least because it will be required when the actual renewal work is performed.

Table 8-5 Calculation of Amount of Additional Refrigerant Charge

Liquid Tube Size (mm)	Total Tube Length (m)		Amount of Additional Refrigerant Charge (g/m)		Sub-total (g)
ø 6.35		x	26	=	
ø 9.52		x	56	=	
ø 12.7		x	128	=	
ø 15.88		x	185	=	
ø 19.05		x	259	=	
ø 22.22		x	366	=	
ø 25.4		x	490	=	

Total (kg)

Table 8-6 Number of Outdoor Unit Connections and Upper Limit for Amount of Additional Refrigerant Charge

Number of Outdoor Units	Upper Limit for Amount of Additional Refrigerant Charge		
	MINI VRF	2WAY VRF	3WAY VRF
1	11.9 kg	50 kg	28 kg
2	———	80 kg	50 kg
3	———	100 kg	60 kg

1. Precautions on Renewal Design & Installation

■ **Judgment 5**
Is there a problem with dirt inside the existing tubing?

After the existing units are removed, new tubing needs to be installed if the existing tubing is in any of the following situations.

- There is apparently a large amount of discolored oil remaining inside the existing tubing.
  Refer to the item "4. Oil color standards for renewal" in the chapter 2 "Reference".
- There is apparently a large amount of residue or wear debris remaining inside the existing tubing.
  Oil collected with a finger feels gritty or looks glittery.

1. Precautions on Renewal Design & Installation

6. Heating Test Run and Cooling Test Run

If refrigerant recovery (pump down) could not be implemented by performing the cooling operation with the existing unit or if there is history of a failure of the compressor in the existing unit, perform the tubing cleaning operation with a heating test run.

- Depending on the outdoor unit type to be used for renewal installation, one additional setting has to be changed properly before starting a test-run operation of the new system. The renewal system operating condition (design pressure: 3.3MPa) will be set by this parameter change. Refer to the following table and be sure to change the parameter accordingly. A maintenance remote controller for the outdoor unit is required to change the relevant parameter. (See the maintenance remote controller's instruction manual for further details on connections and usage methods.)

Required Parameter setting for the renewal system

Model type	Item Code	Setting Data	Remarks
3WAY VRF SYSTEM	4B	Set to 0001 = Renewal system operation (Factory set = 0000)	Setting only for Master unit
2WAY VRF SYSTEM (ME1E81 series only)	4B	Set to 0000 = Renewal system operation (Factory set = 0002)	Setting only for Master unit
MINI VRF SYSTEM	4B	Set to –001 = Renewal system operation (Factory set = 0000)	

a) Heating Test Run

If refrigerant recovery (pump down) could not be implemented by performing the cooling operation with the existing unit or if there is history of a failure of the compressor in the existing unit, perform the tubing cleaning operation with a heating test run.

Furthermore, it is necessary to replace the filter drier of the VRF Renewal Kit (CZ-SLK2) after you perform the tubing cleaning operation.

Obtain and prepare a replacement filter drier in advance.

Step 1 : Perform a heating test run for 30 minutes.

- If a heating test run cannot be performed because there is an insufficient amount of refrigerant, add the required minimum amount of refrigerant.

Step 2 : Stop the outdoor units manually.

Step 3 : Need to replace all filter driers of the VRF Renewal Kit (CZ-SLK2).

The tubing cleaning operation with the heating test run is now complete.

b) Cooling Test Run

If the exact tube length and tube size of the existing tubing are uncertain, the current condition should be one in which the additional charging of the minimum amount of refrigerant calculated in Judgment 4 has been performed. Under the condition, perform a cooling test run, adjust the appropriate amount of system refrigerant while checking the condition of flowing refrigerant with the sight glass.

Step 1 : Start the cooling test run, and wait until the operating condition of the system stabilizes.

Step 2 : After operation stabilizes, visually observe the flowing refrigerant through the sight glass attached to the liquid tubing. If flashing becomes visible, add refrigerant by degrees until flashing disappears.

- Add refrigerant in increments of approximately 1 kg.
- Check flashing after adding refrigerant when operation has stabilized after approximately 10 minutes has elapsed.
- The amount of additional refrigerant must not exceed the maximum amount of additional refrigerant calculated in Judgment 4.

Step 3 : For when maintenance is performed, fill in the total amount of additional refrigerant charge on the label inside the outdoor unit.

The adjustment of the system refrigerant charge amount with the cooling test run is now complete.

2. Reference

1. Purposes for Attaching VRF Renewal Kit (CZ-SLK2)

The VRF Renewal Kit: CZ-SLK2 has functions for collecting small wear debris and residue that pass through the strainer and absorbing moisture.
When existing tubing is reused, the VRF Renewal Kit can be used in addition to the strainer attached to the outdoor unit to collect the wear debris and residue that remains inside the existing tubing in order to prevent them entering inside the outdoor unit.
Furthermore, perform the tubing cleaning operation with a heating test run if there is the possibility of residue remaining inside the existing tubing (heating test run in flow for judging whether to reuse existing tubing).
However, if the tubing cleaning operation is performed, the filter drier of the VRF Renewal Kit must be replaced after the cleaning operation is performed.
Furthermore, it has been verified that a small amount of residue and the like is not a problem if a VRF Renewal Kit is attached, but if there is apparently a large amount of discolored oil or residue, the existing tubing cannot be used because there is danger of the strainer and VRF Renewal Kit becoming clogged (Judgment 5 in flow for judging whether to reuse existing tubing).

2. Type of oil

The type of oil differs depending on the application and refrigerant to be used.
Furthermore, the recent diversification of compressor types as well as the severe conditions of use mean that the additives may differ even if the type is the same.
When reusing existing tubing, the old oil remaining inside the tubing will mix with the oil for the new unit, so perform an evaluation test by mixing an oil for R22 shown below to check that there is no problem.

Mineral oil : Suniso, Freol S and MS
Synthetic fluid : Alkyl benzene-type (HAB, Barrel-freeze), ester-type, ether-type (PVE only)

NOTE

If the existing unit is Type GHP, cleaning of the tubing is required.

VRF series are filled with oil at the time of shipment.

3. Oil discoloration

There are two causes of oil discoloration.

1. Oxide scale or minute wear debris floating in the oil results in the oil appearing discolored.
   The quality of the oil itself has not changed, so the oil can be sufficiently cleaned with the VRF Renewal Kit if there is just a little bit of dirt.
   However, if the oil contains a large amount of wear debris and feels gritty when touched with a fingertip or there is apparently a large amount of residue, the existing piping cannot be used.

2. The oil is exposed to high temperatures for long periods of time resulting in the oil itself becoming discolored.
   Lubrication of the compressor has deteriorated because the lubrication performance of the oil itself has been greatly reduced. Therefore, the existing tubing cannot be used.
   However, it has been verified that there is no adverse effect on the lubrication performance of the new system when there is only a small amount of oil that is discolored as described above.

Remark :
Residual chlorine that causes metal to corrode may sometimes be included in the old oil.
As a countermeasure, add additives for catching the chlorine content into the oil in the VRF series so that no problem occurs.

2. Reference

4. Oil color standards for renewal

In a test tube with a diameter of approximately 2 cm, collect a sample of 3 to 5 cm of oil for renewal, and then check the oil comparing with the pattern of colors below.

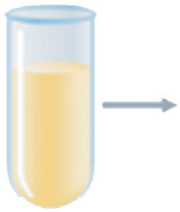

Applicable Oil

Mineral oil : Suniso, Freol S and MS

Synthetic fluid : Alkyl benzene-type (HAB, Barrel-freeze), ester-type, ether-type (PVE only)

If moisture is mixed with the oil, an increase in friction (abnormal friction) or rusting may result in damage to the system.
If moisture is mixed with the oil and the oil is whitish, it is necessary to clean the tubing or install a new tubing.

New Oil

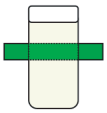

Oil Containing Moisture

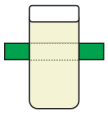

New oil is transparent. If moisture mixes with the oil, the oil emulsifies and the level of transparency is reduced, so it becomes difficult to see through to the other side of the test tube.

5. Standards for judging refrigerant with sight glass

If the exact tube length and tube size of existing tubing are uncertain, you can check with the sight glass whether there is an appropriate amount of additional refrigerant charge.
Check the condition after operation has stabilized during the cooling test run.

Outdoor unit stopped ⟷ Outdoor unit activated

Refrigerant not activated :
As the refrigerant is transparent, the bottom of the sight glass is visible.

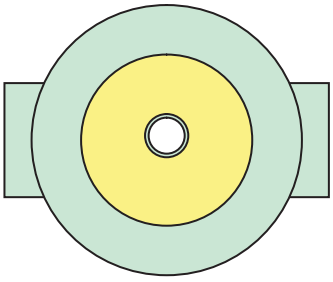

Flashing :
The amount of refrigerant is not satisfied with the standard level.
The refrigerant forms bubbles and seems whitish overall.
Add refrigerant until the appropriate level is reached.

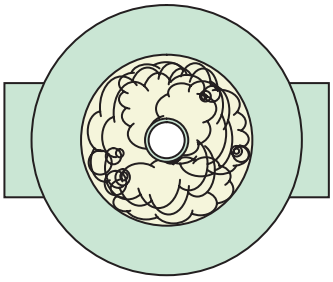

A few bubbles occur :
There seems to be nothing inside the sight glass because the refrigerant is transparent and full.
When the operating condition changes, a few bubbles occur.
No additional refrigerant charge required.

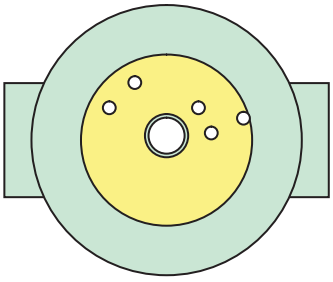

3. INSTALLATION INSTRUCTIONS (VRF Renewal Kit)

Check the parts of the VRF Renewal Kit (CZ-SLK2) you purchased.

Name	Shape	Quantity	Name	Shape	Quantity
(1) Filter drier		1	(3) Tube 1 (for ø12.7)		2
(2) Valve		1	(4) Tube 2 (for ø9.52)		2

1. How to attach the VRF Renewal Kit (CZ-SLK2)

1-1. Assemble and use parts (1) to (4) in the figure above in accordance with the table below.

Outdoor Unit Type	Parts	Quantity	Outdoor Unit Type	Parts	Quantity
4, 5, 6, 8, 10 HP	(1), (2)	1	12, 14, 16 HP	(1), (2)	1
	(3), (4)	2		(3)	2

1-2. Connect each part in accordance with the figure below.

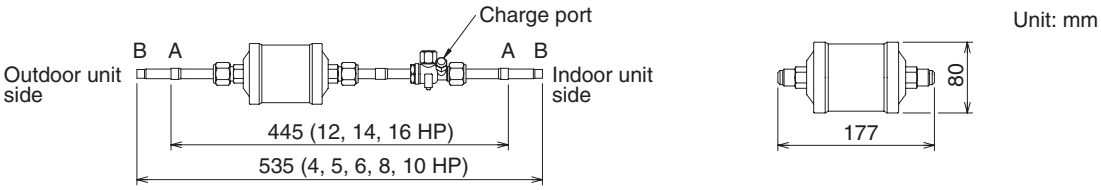

A	B
ø12.7	ø9.52

Connection part dimensions (shows tube inside diameters)

- Attach the valve to the indoor unit side as viewed from the filter drier.
- If the tube size does not match the existing tube size, use a reducer (obtain locally) to adjust the tube diameter.

1-3. Attach the VRF Renewal Kit to each outdoor unit.

1-4. Cut the existing tubing on site with a pipe cutter or the like and attach the VRF Renewal Kit according to the rough indication of the dimensions for attaching the VRF Renewal Kit shown in the figure above.

2. Tightening flare nuts and brazing

- Use a tightening torque of 55±6 N·m for the flare nuts.
- Be sure to use a wet cloth or the like to cool the valve main part and filter drier when you perform the brazing process.

Also, be sure to replace the air inside the tube with nitrogen to prevent the formation of an oxide film when you perform the brazing process.
There is a risk of system mulfunction through clogging of the strainer or refrigerant circuit when the brazing is performed without nitrogen gas replacement in the tube.

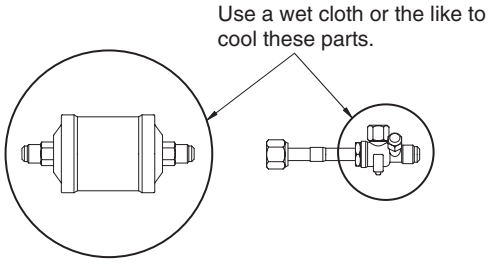

3. Opening and closing the valve

The valve is opened at the time of shipment from the factory.

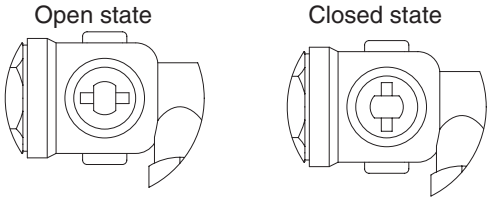

4. Leak testing

Perform a leak test for the brazing parts and flare connections parts.
For the leak test, refer to " Installation Instructions" supplied with the outdoor unit.

5. Attaching thermal insulation material

Make sure the thermal insulation (obtain locally) covers the entire kit.
Use thermal insulation material with a heat resistance of at least 80 °C and thickness of at least 10 mm.

Contents

9. CAPACITY TABLE

1. Capacity Ratio of Outdoor Unit (Standard-COP mode) 9-2
1-1. U-8ME1E81 (Cooling) 9-2
1-2. U-8ME1E81 (Heating) 9-5
1-3. U-10ME1E81 (Cooling) 9-8
1-4. U-10ME1E81 (Heating) 9-11
1-5. U-12ME1E81 (Cooling) 9-14
1-6. U-12ME1E81 (Heating) 9-17
1-7. U-14ME1E81 (Cooling) 9-20
1-8. U-14ME1E81 (Heating) 9-23
1-9. U-16ME1E81 (Cooling) 9-26
1-10. U-16ME1E81 (Heating) 9-29
1-11. U-18ME1E81 (Cooling) 9-32
1-12. U-18ME1E81 (Heating) 9-35
1-13. U-20ME1E81 (Cooling) 9-38
1-14. U-20ME1E81 (Heating) 9-41
2. Capacity Ratio of Outdoor Unit (High-COP mode) 9-44
2-1. U-14ME1E81 (Cooling) 9-44
2-2. U-14ME1E81 (Heating) 9-47
2-3. U-16ME1E81 (Cooling) 9-50
2-4. U-16ME1E81 (Heating) 9-53
2-5. U-18ME1E81 (Cooling) 9-56
2-6. U-18ME1E81 (Heating) 9-59
2-7. U-20ME1E81 (Cooling) 9-62
2-8. U-20ME1E81 (Heating) 9-65
3. Cooling Capacity of Indoor Unit 9-68
3-1. 4-Way Cassette Type (U1 Type) 9-68
3-2. 4-Way Cassette 60×60 Type (Y1 Type) 9-79
3-3. 4-Way Cassette 60×60 Type (Y2 Type) 9-84
3-4. 2-Way Cassette Type (L1 Type) 9-89
3-5. Wall Mounted Type (K1 Type) 9-95
3-6. Wall Mounted Type (K2 Type) 9-102
3-7. Ceiling Type (T1 Type) 9-105
3-8. Low Silhouette Ducted Type (F1 Type) 9-111
3-9. Low Silhouette Ducted Type (F2 Type) 9-121
3-10. High Static Pressure Ducted Type (E1 Type) 9-132
3-11. Floor Standing Type (P1 Type) 9-138
3-12. Concealed Floor Standing Type (R1 Type) 9-144
3-13. 1-Way Cassette Type (D1 Type) 9-150
3-14. Slim Low Static Ducted Type (M1 Type) 9-155

1. Capacity Ratio of Outdoor Unit (Standard-COP mode)

1-1. U-8ME1E81 (Cooling)

Capacity Ratio 30-130%

TC: Total capacity (kW), PI: Power input (kW)

Combination(%) :Indoor/outdoor capacity ratio	Outdoor air temp. °CDB	Indoor air temp. : °CWB													
		16.0		17.0		18.0		19.0		20.0		21.0		22.0	
		TC	PI	TC	PI	TC	PI	TC	PI	TC	PI	TC	PI	TC	PI
		kW	kW	kW	kW	kW	kW	kW	kW	kW	kW	kW	kW	kW	kW
130%	-10.0	24.1	3.04	24.1	3.04	24.1	3.04	24.1	3.04	25.7	3.25	27.3	3.45	28.9	3.66
	-5.0	24.1	3.05	24.1	3.05	24.1	3.05	24.1	3.05	25.7	3.25	27.3	3.46	28.9	3.66
	0.0	24.1	3.06	24.1	3.06	24.1	3.06	24.1	3.06	25.7	3.26	27.3	3.47	28.9	3.67
	5.0	24.1	3.07	24.1	3.07	24.1	3.07	24.1	3.07	25.7	3.28	27.3	3.48	28.9	3.70
	10.0	24.1	3.10	24.1	3.10	24.1	3.10	24.1	3.10	25.7	3.31	27.3	3.52	28.9	3.74
	15.0	24.1	3.16	24.1	3.16	24.1	3.16	24.1	3.16	25.7	3.38	27.3	3.61	28.9	3.83
	20.0	24.1	3.35	24.1	3.35	24.1	3.35	24.1	3.35	25.7	3.60	27.3	3.84	28.9	4.17
	25.0	24.1	4.13	24.1	4.13	24.1	4.13	24.1	4.13	25.7	4.49	27.3	4.86	28.9	5.26
	30.0	24.1	5.09	24.1	5.09	24.1	5.09	24.1	5.09	25.7	5.52	27.3	5.97	28.9	6.44
	35.0	24.1	6.13	24.1	6.13	24.1	6.13	24.1	6.13	25.7	6.64	27.3	7.18	27.9	7.20
	40.0	23.9	7.19	23.9	7.19	23.9	7.19	23.9	7.19	24.5	7.20	25.1	7.20	25.6	7.20
	43.0	22.8	7.20	22.8	7.20	22.8	7.20	22.8	7.20	23.3	7.20	23.9	7.20	24.4	7.20

Combination(%) :Indoor/outdoor capacity ratio	Outdoor air temp. °CDB	Indoor air temp. : °CWB													
		16.0		17.0		18.0		19.0		20.0		21.0		22.0	
		TC	PI	TC	PI	TC	PI	TC	PI	TC	PI	TC	PI	TC	PI
		kW	kW	kW	kW	kW	kW	kW	kW	kW	kW	kW	kW	kW	kW
120%	-10.0	22.6	2.85	23.5	2.97	23.5	2.97	23.5	2.97	25.1	3.17	26.7	3.37	28.2	3.57
	-5.0	22.6	2.85	23.5	2.97	23.5	2.97	23.5	2.97	25.1	3.17	26.7	3.38	28.2	3.58
	0.0	22.6	2.86	23.5	2.99	23.5	2.99	23.5	2.99	25.1	3.19	26.7	3.38	28.2	3.59
	5.0	22.6	2.86	23.5	3.00	23.5	3.00	23.5	3.00	25.1	3.20	26.7	3.40	28.2	3.61
	10.0	22.6	2.88	23.5	3.02	23.5	3.02	23.5	3.02	25.1	3.23	26.7	3.44	28.2	3.65
	15.0	22.6	2.92	23.5	3.09	23.5	3.09	23.5	3.09	25.1	3.30	26.7	3.52	28.2	3.74
	20.0	22.6	3.04	23.5	3.26	23.5	3.26	23.5	3.26	25.1	3.50	26.7	3.74	28.2	4.01
	25.0	22.6	3.56	23.5	3.99	23.5	3.99	23.5	3.99	25.1	4.33	26.7	4.69	28.2	5.06
	30.0	22.6	4.42	23.5	4.91	23.5	4.91	23.5	4.91	25.1	5.34	26.7	5.77	28.2	6.22
	35.0	22.6	5.36	23.5	5.93	23.5	5.93	23.5	5.93	25.1	6.43	26.7	6.94	27.7	7.20
	40.0	22.6	6.38	23.5	7.02	23.5	7.02	23.5	7.02	24.4	7.20	24.9	7.20	25.5	7.20
	43.0	22.6	7.03	22.6	7.20	22.6	7.20	22.6	7.20	23.2	7.20	23.7	7.20	24.2	7.20

Combination(%) :Indoor/outdoor capacity ratio	Outdoor air temp. °CDB	Indoor air temp. : °CWB													
		16.0		17.0		18.0		19.0		20.0		21.0		22.0	
		TC	PI	TC	PI	TC	PI	TC	PI	TC	PI	TC	PI	TC	PI
		kW	kW	kW	kW	kW	kW	kW	kW	kW	kW	kW	kW	kW	kW
110%	-10.0	20.2	2.55	21.9	2.76	23.0	2.90	23.0	2.90	24.5	3.10	26.0	3.29	27.6	3.48
	-5.0	20.2	2.55	21.9	2.76	23.0	2.91	23.0	2.91	24.5	3.10	26.0	3.30	27.6	3.49
	0.0	20.2	2.56	21.9	2.77	23.0	2.91	23.0	2.91	24.5	3.11	26.0	3.31	27.6	3.50
	5.0	20.2	2.57	21.9	2.78	23.0	2.93	23.0	2.93	24.5	3.12	26.0	3.32	27.6	3.52
	10.0	20.2	2.58	21.9	2.80	23.0	2.95	23.0	2.95	24.5	3.15	26.0	3.35	27.6	3.56
	15.0	20.2	2.61	21.9	2.84	23.0	3.01	23.0	3.01	24.5	3.22	26.0	3.43	27.6	3.64
	20.0	20.2	2.73	21.9	2.97	23.0	3.17	23.0	3.17	24.5	3.40	26.0	3.63	27.6	3.87
	25.0	20.2	3.19	21.9	3.51	23.0	3.85	23.0	3.85	24.5	4.18	26.0	4.52	27.6	4.88
	30.0	20.2	3.96	21.9	4.35	23.0	4.75	23.0	4.75	24.5	5.15	26.0	5.56	27.6	5.99
	35.0	20.2	4.80	21.9	5.27	23.0	5.73	23.0	5.73	24.5	6.21	26.0	6.70	27.4	7.17
	40.0	20.2	5.71	21.9	6.27	23.0	6.80	23.0	6.80	24.2	7.20	24.8	7.20	25.3	7.20
	43.0	20.2	6.28	21.9	6.90	22.5	7.20	22.5	7.20	23.0	7.20	23.5	7.20	24.1	7.20

Combination(%) :Indoor/outdoor capacity ratio	Outdoor air temp. °CDB	Indoor air temp. : °CWB													
		16.0		17.0		18.0		19.0		20.0		21.0		22.0	
		TC	PI	TC	PI	TC	PI	TC	PI	TC	PI	TC	PI	TC	PI
		kW	kW	kW	kW	kW	kW	kW	kW	kW	kW	kW	kW	kW	kW
100%	-10.0	17.9	2.27	19.4	2.45	20.9	2.64	22.4	2.83	23.9	3.02	25.4	3.21	26.9	3.40
	-5.0	17.9	2.27	19.4	2.45	20.9	2.64	22.4	2.84	23.9	3.02	25.4	3.21	26.9	3.41
	0.0	17.9	2.27	19.4	2.46	20.9	2.65	22.4	2.84	23.9	3.03	25.4	3.22	26.9	3.41
	5.0	17.9	2.28	19.4	2.47	20.9	2.66	22.4	2.85	23.9	3.05	25.4	3.24	26.9	3.43
	10.0	17.9	2.29	19.4	2.49	20.9	2.68	22.4	2.88	23.9	3.07	25.4	3.27	26.9	3.47
	15.0	17.9	2.33	19.4	2.53	20.9	2.73	22.4	2.93	23.9	3.14	25.4	3.34	26.9	3.55
	20.0	17.9	2.43	19.4	2.64	20.9	2.86	22.4	3.09	23.9	3.31	25.4	3.53	26.9	3.76
	25.0	17.9	2.85	19.4	3.12	20.9	3.41	22.4	3.72	23.9	4.03	25.4	4.35	26.9	4.69
	30.0	17.9	3.52	19.4	3.87	20.9	4.22	22.4	4.59	23.9	4.97	25.4	5.36	26.9	5.77
	35.0	17.9	4.26	19.4	4.68	20.9	5.10	22.4	5.54	23.9	5.99	25.4	6.47	26.9	6.95
	40.0	17.9	5.07	19.4	5.55	20.9	6.06	22.4	6.57	23.9	7.10	24.6	7.20	25.2	7.20
	43.0	17.9	5.58	19.4	6.11	20.9	6.66	22.3	7.19	22.9	7.20	23.4	7.20	23.9	7.20

1. Capacity Ratio of Outdoor Unit (Standard-COP mode)

U-8ME1E81 (Cooling)

Capacity Ratio 30-130%

TC: Total capacity (kW), PI: Power input (kW)

Combination(%) :Indoor/outdoor capacity ratio	Outdoor air temp. ℃DB	Indoor air temp. :℃WB													
		16.0		17.0		18.0		19.0		20.0		21.0		22.0	
		TC	PI	TC	PI	TC	PI	TC	PI	TC	PI	TC	PI	TC	PI
		kW	kW	kW	kW	kW	kW	kW	kW	kW	kW	kW	kW	kW	kW
90%	-10.0	16.1	2.04	17.5	2.20	18.8	2.38	20.2	2.55	21.5	2.71	22.8	2.89	24.2	3.06
	-5.0	16.1	2.04	17.5	2.21	18.8	2.38	20.2	2.55	21.5	2.72	22.8	2.89	24.2	3.06
	0.0	16.1	2.04	17.5	2.21	18.8	2.38	20.2	2.55	21.5	2.73	22.8	2.90	24.2	3.07
	5.0	16.1	2.05	17.5	2.22	18.8	2.39	20.2	2.57	21.5	2.74	22.8	2.91	24.2	3.08
	10.0	16.1	2.06	17.5	2.23	18.8	2.40	20.2	2.58	21.5	2.76	22.8	2.93	24.2	3.11
	15.0	16.1	2.08	17.5	2.26	18.8	2.44	20.2	2.62	21.5	2.80	22.8	2.99	24.2	3.16
	20.0	16.1	2.16	17.5	2.35	18.8	2.54	20.2	2.74	21.5	2.93	22.8	3.12	24.2	3.32
	25.0	16.1	2.49	17.5	2.72	18.8	2.96	20.2	3.21	21.5	3.46	22.8	3.73	24.2	4.00
	30.0	16.1	3.09	17.5	3.37	18.8	3.67	20.2	3.97	21.5	4.29	22.8	4.61	24.2	4.95
	35.0	16.1	3.74	17.5	4.08	18.8	4.44	20.2	4.81	21.5	5.19	22.8	5.57	24.2	5.97
	40.0	16.1	4.45	17.5	4.86	18.8	5.28	20.2	5.71	21.5	6.16	22.8	6.61	24.2	7.08
	43.0	16.1	4.90	17.5	5.35	18.8	5.81	20.2	6.29	21.5	6.78	22.7	7.20	23.2	7.20

Combination(%) :Indoor/outdoor capacity ratio	Outdoor air temp. ℃DB	Indoor air temp. :℃WB													
		16.0		17.0		18.0		19.0		20.0		21.0		22.0	
		TC	PI	TC	PI	TC	PI	TC	PI	TC	PI	TC	PI	TC	PI
		kW	kW	kW	kW	kW	kW	kW	kW	kW	kW	kW	kW	kW	kW
80%	-10.0	14.3	1.81	15.5	1.96	16.7	2.11	17.9	2.27	19.1	2.42	20.3	2.57	21.5	2.71
	-5.0	14.3	1.81	15.5	1.96	16.7	2.12	17.9	2.27	19.1	2.42	20.3	2.57	21.5	2.72
	0.0	14.3	1.81	15.5	1.97	16.7	2.12	17.9	2.27	19.1	2.42	20.3	2.58	21.5	2.73
	5.0	14.3	1.82	15.5	1.97	16.7	2.12	17.9	2.28	19.1	2.43	20.3	2.58	21.5	2.74
	10.0	14.3	1.83	15.5	1.98	16.7	2.13	17.9	2.29	19.1	2.44	20.3	2.60	21.5	2.75
	15.0	14.3	1.84	15.5	2.00	16.7	2.16	17.9	2.32	19.1	2.48	20.3	2.64	21.5	2.79
	20.0	14.3	1.89	15.5	2.06	16.7	2.23	17.9	2.40	19.1	2.57	20.3	2.74	21.5	2.91
	25.0	14.3	2.14	15.5	2.34	16.7	2.54	17.9	2.74	19.1	2.94	20.3	3.16	21.5	3.37
	30.0	14.3	2.68	15.5	2.92	16.7	3.16	17.9	3.41	19.1	3.66	20.3	3.92	21.5	4.19
	35.0	14.3	3.25	15.5	3.53	16.7	3.83	17.9	4.13	19.1	4.43	20.3	4.75	21.5	5.07
	40.0	14.3	3.87	15.5	4.20	16.7	4.55	17.9	4.91	19.1	5.28	20.3	5.65	21.5	6.03
	43.0	14.3	4.26	15.5	4.64	16.7	5.02	17.9	5.41	19.1	5.81	20.3	6.22	21.5	6.64

Combination(%) :Indoor/outdoor capacity ratio	Outdoor air temp. ℃DB	Indoor air temp. :℃WB													
		16.0		17.0		18.0		19.0		20.0		21.0		22.0	
		TC	PI	TC	PI	TC	PI	TC	PI	TC	PI	TC	PI	TC	PI
		kW	kW	kW	kW	kW	kW	kW	kW	kW	kW	kW	kW	kW	kW
70%	-10.0	12.5	1.58	13.6	1.72	14.6	1.85	15.7	1.98	16.7	2.11	17.8	2.24	18.8	2.38
	-5.0	12.5	1.58	13.6	1.72	14.6	1.85	15.7	1.98	16.7	2.12	17.8	2.25	18.8	2.38
	0.0	12.5	1.58	13.6	1.72	14.6	1.85	15.7	1.98	16.7	2.12	17.8	2.25	18.8	2.38
	5.0	12.5	1.59	13.6	1.72	14.6	1.86	15.7	1.99	16.7	2.12	17.8	2.25	18.8	2.39
	10.0	12.5	1.60	13.6	1.73	14.6	1.86	15.7	2.00	16.7	2.13	17.8	2.27	18.8	2.40
	15.0	12.5	1.61	13.6	1.75	14.6	1.88	15.7	2.02	16.7	2.16	17.8	2.29	18.8	2.43
	20.0	12.5	1.65	13.6	1.79	14.6	1.93	15.7	2.07	16.7	2.22	17.8	2.36	18.8	2.51
	25.0	12.5	1.81	13.6	1.98	14.6	2.14	15.7	2.31	16.7	2.47	17.8	2.64	18.8	2.81
	30.0	12.5	2.30	13.6	2.49	14.6	2.69	15.7	2.88	16.7	3.09	17.8	3.29	18.8	3.50
	35.0	12.5	2.79	13.6	3.02	14.6	3.26	15.7	3.50	16.7	3.75	17.8	3.99	18.8	4.25
	40.0	12.5	3.32	13.6	3.60	14.6	3.88	15.7	4.17	16.7	4.47	17.8	4.76	18.8	5.07
	43.0	12.5	3.66	13.6	3.97	14.6	4.28	15.7	4.60	16.7	4.92	17.8	5.25	18.8	5.58

Combination(%) :Indoor/outdoor capacity ratio	Outdoor air temp. ℃DB	Indoor air temp. :℃WB													
		16.0		17.0		18.0		19.0		20.0		21.0		22.0	
		TC	PI	TC	PI	TC	PI	TC	PI	TC	PI	TC	PI	TC	PI
		kW	kW	kW	kW	kW	kW	kW	kW	kW	kW	kW	kW	kW	kW
60%	-10.0	10.8	1.36	11.6	1.47	12.5	1.58	13.4	1.70	14.3	1.81	15.2	1.92	16.1	2.04
	-5.0	10.8	1.36	11.6	1.47	12.5	1.58	13.4	1.70	14.3	1.81	15.2	1.92	16.1	2.04
	0.0	10.8	1.36	11.6	1.47	12.5	1.58	13.4	1.70	14.3	1.81	15.2	1.93	16.1	2.04
	5.0	10.8	1.36	11.6	1.47	12.5	1.59	13.4	1.70	14.3	1.82	15.2	1.93	16.1	2.04
	10.0	10.8	1.36	11.6	1.48	12.5	1.60	13.4	1.71	14.3	1.82	15.2	1.94	16.1	2.06
	15.0	10.8	1.37	11.6	1.49	12.5	1.61	13.4	1.72	14.3	1.84	15.2	1.96	16.1	2.07
	20.0	10.8	1.40	11.6	1.52	12.5	1.64	13.4	1.76	14.3	1.88	15.2	2.00	16.1	2.12
	25.0	10.8	1.51	11.6	1.64	12.5	1.77	13.4	1.91	14.3	2.04	15.2	2.18	16.1	2.32
	30.0	10.8	1.96	11.6	2.11	12.5	2.25	13.4	2.40	14.3	2.56	15.2	2.72	16.1	2.88
	35.0	10.8	2.37	11.6	2.55	12.5	2.73	13.4	2.92	14.3	3.11	15.2	3.31	16.1	3.50
	40.0	10.8	2.81	11.6	3.03	12.5	3.25	13.4	3.48	14.3	3.71	15.2	3.94	16.1	4.18
	43.0	10.8	3.10	11.6	3.34	12.5	3.59	13.4	3.84	14.3	4.09	15.2	4.35	16.1	4.61

1. Capacity Ratio of Outdoor Unit (Standard-COP mode)

U-8ME1E81 (Cooling) **Capacity Ratio 30-130%**

TC: Total capacity (kW), PI: Power input (kW)

Combination(%) :Indoor/outdoor capacity ratio	Outdoor air temp. ℃DB	Indoor air temp. : ℃WB													
		16.0		17.0		18.0		19.0		20.0		21.0		22.0	
		TC	PI	TC	PI	TC	PI	TC	PI	TC	PI	TC	PI	TC	PI
		kW	kW	kW	kW	kW	kW	kW	kW	kW	kW	kW	kW	kW	kW
50%	-10.0	9.0	1.13	9.7	1.22	10.5	1.32	11.2	1.41	11.9	1.51	12.7	1.60	13.4	1.70
	-5.0	9.0	1.13	9.7	1.22	10.5	1.32	11.2	1.41	11.9	1.51	12.7	1.60	13.4	1.70
	0.0	9.0	1.13	9.7	1.23	10.5	1.32	11.2	1.42	11.9	1.51	12.7	1.61	13.4	1.70
	5.0	9.0	1.14	9.7	1.23	10.5	1.32	11.2	1.42	11.9	1.51	12.7	1.61	13.4	1.70
	10.0	9.0	1.14	9.7	1.23	10.5	1.33	11.2	1.42	11.9	1.52	12.7	1.61	13.4	1.71
	15.0	9.0	1.14	9.7	1.24	10.5	1.34	11.2	1.43	11.9	1.52	12.7	1.62	13.4	1.72
	20.0	9.0	1.16	9.7	1.25	10.5	1.35	11.2	1.45	11.9	1.55	12.7	1.65	13.4	1.75
	25.0	9.0	1.22	9.7	1.33	10.5	1.43	11.2	1.54	11.9	1.65	12.7	1.76	13.4	1.86
	30.0	9.0	1.64	9.7	1.75	10.5	1.86	11.2	1.97	11.9	2.09	12.7	2.20	13.4	2.32
	35.0	9.0	1.97	9.7	2.11	10.5	2.25	11.2	2.39	11.9	2.54	12.7	2.68	13.4	2.83
	40.0	9.0	2.33	9.7	2.50	10.5	2.68	11.2	2.85	11.9	3.02	12.7	3.20	13.4	3.37
	43.0	9.0	2.57	9.7	2.75	10.5	2.95	11.2	3.14	11.9	3.33	12.7	3.53	13.4	3.73

Combination(%) :Indoor/outdoor capacity ratio	Outdoor air temp. ℃DB	Indoor air temp. : ℃WB													
		16.0		17.0		18.0		19.0		20.0		21.0		22.0	
		TC	PI	TC	PI	TC	PI	TC	PI	TC	PI	TC	PI	TC	PI
		kW	kW	kW	kW	kW	kW	kW	kW	kW	kW	kW	kW	kW	kW
40%	-10.0	7.2	0.90	7.8	0.98	8.4	1.06	9.0	1.13	9.6	1.21	10.1	1.28	10.8	1.36
	-5.0	7.2	0.90	7.8	0.98	8.4	1.06	9.0	1.13	9.6	1.21	10.1	1.29	10.8	1.36
	0.0	7.2	0.91	7.8	0.98	8.4	1.06	9.0	1.13	9.6	1.21	10.1	1.29	10.8	1.36
	5.0	7.2	0.91	7.8	0.98	8.4	1.06	9.0	1.14	9.6	1.21	10.1	1.29	10.8	1.36
	10.0	7.2	0.91	7.8	0.99	8.4	1.06	9.0	1.14	9.6	1.21	10.1	1.29	10.8	1.36
	15.0	7.2	0.91	7.8	0.99	8.4	1.06	9.0	1.14	9.6	1.22	10.1	1.30	10.8	1.37
	20.0	7.2	0.92	7.8	1.00	8.4	1.07	9.0	1.15	9.6	1.23	10.1	1.31	10.8	1.39
	25.0	7.2	0.95	7.8	1.04	8.4	1.12	9.0	1.20	9.6	1.29	10.1	1.36	10.8	1.45
	30.0	7.2	1.35	7.8	1.42	8.4	1.51	9.0	1.58	9.6	1.67	10.1	1.75	10.8	1.83
	35.0	7.2	1.61	7.8	1.71	8.4	1.81	9.0	1.91	9.6	2.02	10.1	2.12	10.8	2.22
	40.0	7.2	1.89	7.8	2.02	8.4	2.14	9.0	2.27	9.6	2.39	10.1	2.52	10.8	2.64
	43.0	7.2	2.07	7.8	2.21	8.4	2.35	9.0	2.49	9.6	2.63	10.1	2.78	10.8	2.91

Combination(%) :Indoor/outdoor capacity ratio	Outdoor air temp. ℃DB	Indoor air temp. : ℃WB													
		16.0		17.0		18.0		19.0		20.0		21.0		22.0	
		TC	PI	TC	PI	TC	PI	TC	PI	TC	PI	TC	PI	TC	PI
		kW	kW	kW	kW	kW	kW	kW	kW	kW	kW	kW	kW	kW	kW
30%	-10.0	5.4	0.68	5.8	0.74	6.3	0.79	6.7	0.85	7.2	0.90	7.6	0.96	8.1	1.02
	-5.0	5.4	0.68	5.8	0.74	6.3	0.79	6.7	0.85	7.2	0.90	7.6	0.96	8.1	1.02
	0.0	5.4	0.68	5.8	0.74	6.3	0.79	6.7	0.85	7.2	0.91	7.6	0.96	8.1	1.02
	5.0	5.4	0.68	5.8	0.74	6.3	0.79	6.7	0.85	7.2	0.91	7.6	0.96	8.1	1.02
	10.0	5.4	0.68	5.8	0.74	6.3	0.79	6.7	0.85	7.2	0.91	7.6	0.96	8.1	1.02
	15.0	5.4	0.68	5.8	0.74	6.3	0.80	6.7	0.85	7.2	0.91	7.6	0.97	8.1	1.02
	20.0	5.4	0.69	5.8	0.74	6.3	0.80	6.7	0.86	7.2	0.92	7.6	0.98	8.1	1.03
	25.0	5.4	0.70	5.8	0.76	6.3	0.82	6.7	0.88	7.2	0.94	7.6	1.00	8.1	1.06
	30.0	5.4	0.92	5.8	0.98	6.3	1.04	6.7	1.10	7.2	1.16	7.6	1.22	8.1	1.28
	35.0	5.4	1.27	5.8	1.34	6.3	1.41	6.7	1.47	7.2	1.55	7.6	1.61	8.1	1.68
	40.0	5.4	1.48	5.8	1.56	6.3	1.65	6.7	1.73	7.2	1.82	7.6	1.91	8.1	1.99
	43.0	5.4	1.61	5.8	1.71	6.3	1.81	6.7	1.90	7.2	1.99	7.6	2.09	8.1	2.18

1. Capacity Ratio of Outdoor Unit (Standard-COP mode)

1-2. U-8ME1E81 (Heating)

Capacity Ratio 30-130%

TC: Total capacity (kW), PI: Power input (kW)

Combination(%) :Indoor/outdoor capacity ratio	Outdoor air temp.		Indoor air temp. : ℃CDB													
			15.0		17.0		19.0		20.0		21.0		23.0		25.0	
			TC	PI	TC	PI	TC	PI	TC	PI	TC	PI	TC	PI	TC	PI
	℃CDB	℃CWB	kW	kW	kW	kW	kW	kW	kW	kW	kW	kW	kW	kW	kW	kW
130%	-24.9	-25.0	18.0	5.70	17.0	5.41	16.0	5.12	15.5	4.97	15.5	4.97	15.5	4.97	15.5	4.97
	-19.8	-20.0	19.0	5.82	17.9	5.52	16.9	5.22	16.4	5.07	16.4	5.07	16.4	5.07	16.4	5.07
	-14.7	-15.0	20.1	5.97	19.1	5.67	18.0	5.36	17.4	5.21	17.4	5.21	17.4	5.21	17.4	5.21
	-9.6	-10.0	21.6	6.18	20.4	5.86	19.3	5.54	18.7	5.38	18.7	5.38	18.7	5.38	18.7	5.38
	-4.4	-5.0	23.5	6.44	22.3	6.12	21.0	5.78	20.4	5.61	20.4	5.61	20.4	5.61	20.4	5.61
	-1.8	-2.5	24.6	6.61	23.4	6.27	22.1	5.92	21.4	5.75	21.4	5.75	21.4	5.75	21.4	5.75
	0.8	0.0	26.0	6.77	24.7	6.42	23.4	6.07	22.7	5.89	22.7	5.89	22.7	5.89	22.7	5.89
	2.8	2.0	27.4	6.92	26.1	6.58	24.7	6.23	24.0	6.05	24.0	6.05	24.0	6.05	24.0	6.05
	6.0	5.0	29.8	7.12	28.9	6.98	27.5	6.64	26.8	6.46	26.8	6.46	26.8	6.46	26.8	6.46
	7.0	6.0	30.6	7.12	29.9	7.10	27.9	6.54	26.9	6.26	26.9	6.26	26.9	6.26	26.9	6.26
	8.6	7.5	31.7	7.12	29.9	6.67	27.9	6.14	26.9	5.89	26.9	5.89	26.9	5.89	26.9	5.89
	11.2	10.0	31.9	6.46	29.9	5.97	27.9	5.51	26.9	5.28	26.9	5.28	26.9	5.28	26.9	5.28
	16.4	15.0	31.9	5.09	29.9	4.72	27.9	4.37	26.9	4.19	26.9	4.19	26.9	4.19	26.9	4.19

Combination(%) :Indoor/outdoor capacity ratio	Outdoor air temp.		Indoor air temp. : ℃CDB													
			15.0		17.0		19.0		20.0		21.0		23.0		25.0	
			TC	PI	TC	PI	TC	PI	TC	PI	TC	PI	TC	PI	TC	PI
	℃CDB	℃CWB	kW	kW	kW	kW	kW	kW	kW	kW	kW	kW	kW	kW	kW	kW
120%	-24.9	-25.0	18.1	5.67	17.1	5.39	16.1	5.10	15.5	4.95	15.5	4.95	15.5	4.95	15.5	5.05
	-19.8	-20.0	19.0	5.79	18.0	5.50	16.9	5.21	16.4	5.06	16.4	5.06	16.4	5.06	16.4	5.14
	-14.7	-15.0	20.2	5.95	19.1	5.65	18.0	5.34	17.4	5.19	17.4	5.19	17.4	5.19	17.4	5.19
	-9.6	-10.0	21.6	6.15	20.5	5.84	19.3	5.52	18.7	5.36	18.7	5.36	18.7	5.36	18.7	5.36
	-4.4	-5.0	23.5	6.42	22.3	6.09	21.1	5.76	20.4	5.59	20.4	5.59	20.4	5.59	20.4	5.59
	-1.8	-2.5	24.7	6.59	23.4	6.25	22.1	5.90	21.5	5.73	21.5	5.73	21.5	5.73	21.5	5.73
	0.8	0.0	26.1	6.73	24.8	6.40	23.4	6.04	22.7	5.87	22.7	5.87	22.7	5.87	22.7	5.87
	2.8	2.0	27.4	6.89	26.1	6.55	24.7	6.20	24.1	6.03	24.1	6.03	24.1	6.03	24.1	6.03
	6.0	5.0	29.9	7.12	28.9	6.97	27.2	6.51	26.3	6.24	26.3	6.24	26.3	6.24	25.7	5.90
	7.0	6.0	30.7	7.12	29.2	6.78	27.2	6.26	26.3	6.00	26.3	6.00	26.3	6.00	25.7	5.67
	8.6	7.5	31.1	6.87	29.2	6.37	27.2	5.87	26.3	5.63	26.3	5.63	26.3	5.63	25.7	5.33
	11.2	10.0	31.1	6.14	29.2	5.69	27.2	5.26	26.3	5.05	26.3	5.05	26.3	5.05	25.7	4.78
	16.4	15.0	31.1	4.83	29.2	4.49	27.2	4.16	26.3	3.99	26.3	3.99	26.3	3.99	25.7	3.81

Combination(%) :Indoor/outdoor capacity ratio	Outdoor air temp.		Indoor air temp. : ℃CDB													
			15.0		17.0		19.0		20.0		21.0		23.0		25.0	
			TC	PI	TC	PI	TC	PI	TC	PI	TC	PI	TC	PI	TC	PI
	℃CDB	℃CWB	kW	kW	kW	kW	kW	kW	kW	kW	kW	kW	kW	kW	kW	kW
110%	-24.9	-25.0	18.1	5.64	17.1	5.36	16.1	5.08	15.6	4.94	15.6	4.94	15.4	4.95	14.2	4.64
	-19.8	-20.0	19.1	5.77	18.0	5.48	17.0	5.19	16.4	5.05	16.4	5.05	16.3	5.05	15.1	4.73
	-14.7	-15.0	20.3	5.93	19.2	5.63	18.0	5.33	17.5	5.18	17.5	5.18	17.3	5.17	16.0	4.84
	-9.6	-10.0	21.7	6.14	20.6	5.83	19.4	5.51	18.8	5.35	18.8	5.35	18.7	5.34	17.3	4.99
	-4.4	-5.0	23.6	6.41	22.4	6.08	21.1	5.75	20.5	5.58	20.5	5.58	20.3	5.56	18.9	5.18
	-1.8	-2.5	24.8	6.57	23.5	6.23	22.2	5.89	21.5	5.71	21.5	5.71	21.4	5.69	19.9	5.30
	0.8	0.0	26.2	6.71	24.8	6.37	23.5	6.02	22.8	5.85	22.8	5.85	22.7	5.83	21.2	5.44
	2.8	2.0	27.5	6.87	26.2	6.53	24.8	6.19	24.1	6.01	24.1	6.01	24.1	6.01	22.5	5.61
	6.0	5.0	30.1	7.12	28.5	6.75	26.6	6.23	25.6	5.97	25.6	5.97	25.1	5.74	23.0	5.22
	7.0	6.0	30.4	6.99	28.5	6.48	26.6	5.98	25.6	5.74	25.6	5.74	25.1	5.51	23.0	5.01
	8.6	7.5	30.4	6.55	28.5	6.07	26.6	5.61	25.6	5.39	25.6	5.39	25.1	5.18	23.0	4.71
	11.2	10.0	30.4	5.84	28.5	5.43	26.6	5.02	25.6	4.82	25.6	4.82	25.1	4.64	23.0	4.23
	16.4	15.0	30.4	4.58	28.5	4.27	26.6	3.96	25.6	3.81	25.6	3.81	25.1	3.68	23.0	3.36

Combination(%) :Indoor/outdoor capacity ratio	Outdoor air temp.		Indoor air temp. : ℃CDB													
			15.0		17.0		19.0		20.0		21.0		23.0		25.0	
			TC	PI	TC	PI	TC	PI	TC	PI	TC	PI	TC	PI	TC	PI
	℃CDB	℃CWB	kW	kW	kW	kW	kW	kW	kW	kW	kW	kW	kW	kW	kW	kW
100%	-24.9	-25.0	18.2	5.62	17.2	5.35	16.1	5.07	15.6	4.93	15.1	4.79	14.1	4.52	13.0	4.24
	-19.8	-20.0	19.2	5.75	18.1	5.46	17.0	5.18	16.5	5.04	16.0	4.89	14.9	4.60	13.7	4.32
	-14.7	-15.0	20.3	5.91	19.2	5.62	18.1	5.32	17.5	5.17	17.0	5.02	15.8	4.72	14.6	4.42
	-9.6	-10.0	21.8	6.12	20.6	5.81	19.4	5.50	18.8	5.34	18.2	5.19	17.0	4.87	15.7	4.55
	-4.4	-5.0	23.7	6.39	22.4	6.07	21.2	5.74	20.5	5.57	19.9	5.40	18.5	5.06	17.2	4.72
	-1.8	-2.5	24.8	6.54	23.5	6.21	22.2	5.87	21.6	5.70	20.9	5.52	19.5	5.18	18.1	4.83
	0.8	0.0	26.2	6.69	24.9	6.35	23.5	6.01	22.9	5.84	22.2	5.66	20.7	5.31	19.3	4.95
	2.8	2.0	27.6	6.86	26.3	6.52	24.9	6.18	24.2	6.01	23.5	5.83	22.0	5.47	20.4	5.07
	6.0	5.0	29.6	6.93	27.8	6.43	25.9	5.95	25.0	5.72	24.1	5.48	22.2	5.02	20.4	4.58
	7.0	6.0	29.6	6.65	27.8	6.18	25.9	5.72	25.0	5.48	24.1	5.27	22.2	4.82	20.4	4.39
	8.6	7.5	29.6	6.23	27.8	5.79	25.9	5.36	25.0	5.15	24.1	4.94	22.2	4.53	20.4	4.13
	11.2	10.0	29.6	5.55	27.8	5.16	25.9	4.78	25.0	4.60	24.1	4.42	22.2	4.06	20.4	3.70
	16.4	15.0	29.6	4.33	27.8	4.05	25.9	3.76	25.0	3.62	24.1	3.49	22.2	3.21	20.4	2.94

1. Capacity Ratio of Outdoor Unit (Standard-COP mode)

U-8ME1E81 (Heating)

Capacity Ratio 30-130%

TC: Total capacity (kW), PI: Power input (kW)

Combination(%) :Indoor/outdoor capacity ratio	Outdoor air temp.		Indoor air temp. : ℃CDB													
			15.0		17.0		19.0		20.0		21.0		23.0		25.0	
			TC	PI	TC	PI	TC	PI	TC	PI	TC	PI	TC	PI	TC	PI
	℃CDB	℃CWB	kW	kW	kW	kW	kW	kW	kW	kW	kW	kW	kW	kW	kW	kW
90%	-24.9	-25.0	18.5	5.58	17.5	5.32	16.4	5.06	15.9	4.93	15.3	4.80	14.3	4.54	13.2	4.29
	-19.8	-20.0	19.5	5.72	18.4	5.45	17.3	5.18	16.8	5.04	16.2	4.90	15.1	4.64	13.9	4.37
	-14.7	-15.0	20.7	5.90	19.6	5.61	18.4	5.33	17.8	5.18	17.2	5.04	16.0	4.75	14.8	4.47
	-9.6	-10.0	22.2	6.11	21.0	5.81	19.8	5.51	19.1	5.36	18.5	5.21	17.2	4.90	15.9	4.59
	-4.4	-5.0	24.1	6.38	22.8	6.07	21.5	5.74	20.8	5.58	20.2	5.42	18.8	5.09	17.4	4.76
	-1.8	-2.5	25.3	6.52	24.0	6.19	22.6	5.86	21.9	5.69	21.2	5.53	19.8	5.20	18.3	4.86
	0.8	0.0	26.7	6.65	25.0	6.21	23.3	5.79	22.5	5.57	21.7	5.37	20.0	4.96	18.3	4.57
	2.8	2.0	26.7	6.28	25.0	5.87	23.3	5.47	22.5	5.27	21.7	5.07	20.0	4.69	18.3	4.31
	6.0	5.0	26.7	5.64	25.0	5.28	23.3	4.92	22.5	4.74	21.7	4.56	20.0	4.21	18.3	3.86
	7.0	6.0	26.7	5.41	25.0	5.06	23.3	4.71	22.5	4.54	21.7	4.37	20.0	4.03	18.3	3.70
	8.6	7.5	26.7	5.04	25.0	4.72	23.3	4.40	22.5	4.24	21.7	4.09	20.0	3.78	18.3	3.47
	11.2	10.0	26.7	4.47	25.0	4.19	23.3	3.91	22.5	3.78	21.7	3.64	20.0	3.37	18.3	3.10
	16.4	15.0	26.7	3.44	25.0	3.24	23.3	3.04	22.5	2.94	21.7	2.84	20.0	2.65	18.3	2.45

Combination(%) :Indoor/outdoor capacity ratio	Outdoor air temp.		Indoor air temp. : ℃CDB													
			15.0		17.0		19.0		20.0		21.0		23.0		25.0	
			TC	PI	TC	PI	TC	PI	TC	PI	TC	PI	TC	PI	TC	PI
	℃CDB	℃CWB	kW	kW	kW	kW	kW	kW	kW	kW	kW	kW	kW	kW	kW	kW
80%	-24.9	-25.0	19.0	5.64	17.9	5.40	16.8	5.15	16.3	5.03	15.7	4.90	14.6	4.66	13.5	4.42
	-19.8	-20.0	20.1	5.79	18.9	5.53	17.8	5.28	17.2	5.15	16.6	5.01	15.4	4.76	14.3	4.50
	-14.7	-15.0	21.3	5.98	20.1	5.70	18.9	5.43	18.3	5.29	17.7	5.15	16.5	4.88	15.2	4.59
	-9.6	-10.0	22.9	6.21	21.6	5.92	20.3	5.62	19.7	5.47	19.0	5.33	17.7	5.02	16.3	4.71
	-4.4	-5.0	23.7	6.05	22.2	5.70	20.8	5.36	20.0	5.19	19.3	5.02	17.8	4.69	16.3	4.36
	-1.8	-2.5	23.7	5.73	22.2	5.40	20.8	5.07	20.0	4.91	19.3	4.75	17.8	4.43	16.3	4.13
	0.8	0.0	23.7	5.37	22.2	5.06	20.8	4.76	20.0	4.61	19.3	4.46	17.8	4.16	16.3	3.86
	2.8	2.0	23.7	5.05	22.2	4.77	20.8	4.48	20.0	4.34	19.3	4.20	17.8	3.91	16.3	3.63
	6.0	5.0	23.7	4.51	22.2	4.25	20.8	3.99	20.0	3.86	19.3	3.73	17.8	3.47	16.3	3.21
	7.0	6.0	23.7	4.30	22.2	4.06	20.8	3.81	20.0	3.69	19.3	3.57	17.8	3.32	16.3	3.07
	8.6	7.5	23.7	4.00	22.2	3.78	20.8	3.55	20.0	3.44	19.3	3.33	17.8	3.10	16.3	2.87
	11.2	10.0	23.7	3.51	22.2	3.33	20.8	3.14	20.0	3.05	19.3	2.95	17.8	2.76	16.3	2.56
	16.4	15.0	23.7	2.82	22.2	2.65	20.8	2.49	20.0	2.41	19.3	2.33	17.8	2.16	16.3	2.01

Combination(%) :Indoor/outdoor capacity ratio	Outdoor air temp.		Indoor air temp. : ℃CDB													
			15.0		17.0		19.0		20.0		21.0		23.0		25.0	
			TC	PI	TC	PI	TC	PI	TC	PI	TC	PI	TC	PI	TC	PI
	℃CDB	℃CWB	kW	kW	kW	kW	kW	kW	kW	kW	kW	kW	kW	kW	kW	kW
70%	-24.9	-25.0	19.8	5.84	18.6	5.61	17.5	5.38	16.9	5.26	16.3	5.14	15.2	4.91	14.0	4.68
	-19.8	-20.0	20.8	5.96	19.5	5.67	18.2	5.38	17.5	5.24	16.9	5.10	15.6	4.82	14.3	4.54
	-14.7	-15.0	20.8	5.68	19.5	5.39	18.2	5.11	17.5	4.97	16.9	4.83	15.6	4.55	14.3	4.28
	-9.6	-10.0	20.8	5.32	19.5	5.06	18.2	4.81	17.5	4.68	16.9	4.55	15.6	4.28	14.3	4.01
	-4.4	-5.0	20.8	4.84	19.5	4.61	18.2	4.38	17.5	4.26	16.9	4.15	15.6	3.91	14.3	3.68
	-1.8	-2.5	20.8	4.56	19.5	4.35	18.2	4.13	17.5	4.02	16.9	3.91	15.6	3.69	14.3	3.46
	0.8	0.0	20.8	4.26	19.5	4.06	18.2	3.85	17.5	3.75	16.9	3.65	15.6	3.44	14.3	3.23
	2.8	2.0	20.8	3.99	19.5	3.80	18.2	3.61	17.5	3.51	16.9	3.41	15.6	3.21	14.3	2.98
	6.0	5.0	20.8	3.52	19.5	3.35	18.2	3.17	17.5	3.09	16.9	2.99	15.6	2.81	14.3	2.62
	7.0	6.0	20.8	3.34	19.5	3.19	18.2	3.02	17.5	2.94	16.9	2.86	15.6	2.69	14.3	2.51
	8.6	7.5	20.8	3.10	19.5	2.95	18.2	2.81	17.5	2.73	16.9	2.66	15.6	2.50	14.3	2.34
	11.2	10.0	20.8	2.70	19.5	2.58	18.2	2.47	17.5	2.41	16.9	2.34	15.6	2.21	14.3	2.08
	16.4	15.0	20.8	2.49	19.5	2.35	18.2	2.20	17.5	2.13	16.9	2.06	15.6	1.92	14.3	1.78

Combination(%) :Indoor/outdoor capacity ratio	Outdoor air temp.		Indoor air temp. : ℃CDB													
			15.0		17.0		19.0		20.0		21.0		23.0		25.0	
			TC	PI	TC	PI	TC	PI	TC	PI	TC	PI	TC	PI	TC	PI
	℃CDB	℃CWB	kW	kW	kW	kW	kW	kW	kW	kW	kW	kW	kW	kW	kW	kW
60%	-24.9	-25.0	17.8	5.05	16.7	4.85	15.6	4.65	15.0	4.55	14.5	4.45	13.3	4.25	12.2	4.06
	-19.8	-20.0	17.8	4.84	16.7	4.64	15.6	4.43	15.0	4.33	14.5	4.24	13.3	4.03	12.2	3.83
	-14.7	-15.0	17.8	4.56	16.7	4.39	15.6	4.22	15.0	4.12	14.5	4.02	13.3	3.81	12.2	3.61
	-9.6	-10.0	17.8	4.23	16.7	4.07	15.6	3.91	15.0	3.83	14.5	3.75	13.3	3.57	12.2	3.39
	-4.4	-5.0	17.8	3.81	16.7	3.68	15.6	3.53	15.0	3.46	14.5	3.39	13.3	3.23	12.2	3.06
	-1.8	-2.5	17.8	3.57	16.7	3.45	15.6	3.32	15.0	3.24	14.5	3.17	13.3	3.02	12.2	2.87
	0.8	0.0	17.8	3.31	16.7	3.19	15.6	3.07	15.0	3.01	14.5	2.94	13.3	2.78	12.2	2.60
	2.8	2.0	17.8	3.08	16.7	2.97	15.6	2.84	15.0	2.77	14.5	2.70	13.3	2.55	12.2	2.39
	6.0	5.0	17.8	2.66	16.7	2.56	15.6	2.46	15.0	2.41	14.5	2.35	13.3	2.22	12.2	2.10
	7.0	6.0	17.8	2.53	16.7	2.44	15.6	2.34	15.0	2.29	14.5	2.24	13.3	2.13	12.2	2.01
	8.6	7.5	17.8	2.32	16.7	2.25	15.6	2.16	15.0	2.12	14.5	2.07	13.3	1.97	12.2	1.87
	11.2	10.0	17.8	2.16	16.7	2.04	15.6	1.92	15.0	1.86	14.5	1.81	13.3	1.74	12.2	1.65
	16.4	15.0	17.8	2.16	16.7	2.04	15.6	1.92	15.0	1.86	14.5	1.80	13.3	1.68	12.2	1.55

1. Capacity Ratio of Outdoor Unit (Standard-COP mode)

U-8ME1E81 (Heating)

Capacity Ratio 30-130%

TC: Total capacity (kW), PI: Power input (kW)

Combination(%) :Indoor/outdoor capacity ratio	Outdoor air temp.		Indoor air temp. : °CDB													
			15.0		17.0		19.0		20.0		21.0		23.0		25.0	
			TC	PI	TC	PI	TC	PI	TC	PI	TC	PI	TC	PI	TC	PI
	°CDB	°CWB	kW	kW	kW	kW	kW	kW	kW	kW	kW	kW	kW	kW	kW	kW
50%	-24.9	-25.0	14.8	4.06	13.9	3.92	13.0	3.79	12.5	3.72	12.0	3.66	11.1	3.52	10.2	3.38
	-19.8	-20.0	14.8	3.85	13.9	3.75	13.0	3.62	12.5	3.55	12.0	3.47	11.1	3.33	10.2	3.19
	-14.7	-15.0	14.8	3.60	13.9	3.51	13.0	3.41	12.5	3.35	12.0	3.29	11.1	3.15	10.2	3.00
	-9.6	-10.0	14.8	3.31	13.9	3.23	13.0	3.13	12.5	3.09	12.0	3.04	11.1	2.93	10.2	2.81
	-4.4	-5.0	14.8	2.95	13.9	2.88	13.0	2.81	12.5	2.76	12.0	2.72	11.1	2.62	10.2	2.48
	-1.8	-2.5	14.8	2.75	13.9	2.69	13.0	2.61	12.5	2.58	12.0	2.52	11.1	2.39	10.2	2.26
	0.8	0.0	14.8	2.52	13.9	2.45	13.0	2.36	12.5	2.31	12.0	2.26	11.1	2.15	10.2	2.04
	2.8	2.0	14.8	2.29	13.9	2.22	13.0	2.15	12.5	2.11	12.0	2.07	11.1	1.98	10.2	1.87
	6.0	5.0	14.8	1.95	13.9	1.90	13.0	1.85	12.5	1.82	12.0	1.79	11.1	1.72	10.2	1.64
	7.0	6.0	14.8	1.84	13.9	1.80	13.0	1.75	12.5	1.73	12.0	1.70	11.1	1.64	10.2	1.57
	8.6	7.5	14.8	1.84	13.9	1.74	13.0	1.63	12.5	1.59	12.0	1.57	11.1	1.52	10.2	1.45
	11.2	10.0	14.8	1.84	13.9	1.74	13.0	1.63	12.5	1.58	12.0	1.53	11.1	1.43	10.2	1.33
	16.4	15.0	14.8	1.84	13.9	1.74	13.0	1.63	12.5	1.58	12.0	1.53	11.1	1.43	10.2	1.33

Combination(%) :Indoor/outdoor capacity ratio	Outdoor air temp.		Indoor air temp. : °CDB													
			15.0		17.0		19.0		20.0		21.0		23.0		25.0	
			TC	PI	TC	PI	TC	PI	TC	PI	TC	PI	TC	PI	TC	PI
	°CDB	°CWB	kW	kW	kW	kW	kW	kW	kW	kW	kW	kW	kW	kW	kW	kW
40%	-24.9	-25.0	11.9	3.18	11.1	3.11	10.4	3.02	10.0	2.98	9.6	2.94	8.9	2.84	8.2	2.75
	-19.8	-20.0	11.9	3.00	11.1	2.95	10.4	2.89	10.0	2.84	9.6	2.79	8.9	2.69	8.2	2.59
	-14.7	-15.0	11.9	2.79	11.1	2.75	10.4	2.70	10.0	2.66	9.6	2.63	8.9	2.54	8.2	2.43
	-9.6	-10.0	11.9	2.54	11.1	2.51	10.4	2.47	10.0	2.44	9.6	2.41	8.9	2.34	8.2	2.24
	-4.4	-5.0	11.9	2.24	11.1	2.21	10.4	2.15	10.0	2.11	9.6	2.07	8.9	1.98	8.2	1.89
	-1.8	-2.5	11.9	2.04	11.1	1.99	10.4	1.93	10.0	1.90	9.6	1.87	8.9	1.80	8.2	1.72
	0.8	0.0	11.9	1.80	11.1	1.77	10.4	1.73	10.0	1.70	9.6	1.68	8.9	1.62	8.2	1.55
	2.8	2.0	11.9	1.62	11.1	1.60	10.4	1.57	10.0	1.55	9.6	1.53	8.9	1.48	8.2	1.42
	6.0	5.0	11.9	1.51	11.1	1.43	10.4	1.35	10.0	1.33	9.6	1.32	8.9	1.28	8.2	1.24
	7.0	6.0	11.9	1.51	11.1	1.43	10.4	1.35	10.0	1.30	9.6	1.27	8.9	1.22	8.2	1.18
	8.6	7.5	11.9	1.51	11.1	1.43	10.4	1.35	10.0	1.30	9.6	1.27	8.9	1.18	8.2	1.10
	11.2	10.0	11.9	1.51	11.1	1.43	10.4	1.35	10.0	1.30	9.6	1.27	8.9	1.18	8.2	1.10
	16.4	15.0	11.9	1.51	11.1	1.43	10.4	1.35	10.0	1.30	9.6	1.27	8.9	1.18	8.2	1.10

Combination(%) :Indoor/outdoor capacity ratio	Outdoor air temp.		Indoor air temp. : °CDB													
			15.0		17.0		19.0		20.0		21.0		23.0		25.0	
			TC	PI	TC	PI	TC	PI	TC	PI	TC	PI	TC	PI	TC	PI
	°CDB	°CWB	kW	kW	kW	kW	kW	kW	kW	kW	kW	kW	kW	kW	kW	kW
30%	-24.9	-25.0	8.9	2.42	8.3	2.38	7.8	2.32	7.5	2.30	7.2	2.26	6.7	2.20	6.1	2.14
	-19.8	-20.0	8.9	2.26	8.3	2.24	7.8	2.21	7.5	2.18	7.2	2.15	6.7	2.08	6.1	2.01
	-14.7	-15.0	8.9	2.10	8.3	2.08	7.8	2.06	7.5	2.04	7.2	2.02	6.7	1.96	6.1	1.87
	-9.6	-10.0	8.9	1.90	8.3	1.87	7.8	1.82	7.5	1.80	7.2	1.76	6.7	1.70	6.1	1.62
	-4.4	-5.0	8.9	1.55	8.3	1.53	7.8	1.50	7.5	1.48	7.2	1.46	6.7	1.41	6.1	1.36
	-1.8	-2.5	8.9	1.38	8.3	1.36	7.8	1.35	7.5	1.33	7.2	1.32	6.7	1.28	6.1	1.24
	0.8	0.0	8.9	1.21	8.3	1.21	7.8	1.20	7.5	1.19	7.2	1.18	6.7	1.16	6.1	1.12
	2.8	2.0	8.9	1.18	8.3	1.12	7.8	1.09	7.5	1.08	7.2	1.07	6.7	1.05	6.1	1.03
	6.0	5.0	8.9	1.18	8.3	1.12	7.8	1.06	7.5	1.03	7.2	1.00	6.7	0.94	6.1	0.90
	7.0	6.0	8.9	1.18	8.3	1.12	7.8	1.06	7.5	1.03	7.2	1.00	6.7	0.94	6.1	0.88
	8.6	7.5	8.9	1.18	8.3	1.12	7.8	1.06	7.5	1.03	7.2	1.00	6.7	0.94	6.1	0.88
	11.2	10.0	8.9	1.18	8.3	1.12	7.8	1.06	7.5	1.03	7.2	1.00	6.7	0.94	6.1	0.88
	16.4	15.0	8.9	1.18	8.3	1.12	7.8	1.06	7.5	1.03	7.2	1.00	6.7	0.94	6.1	0.88

1. Capacity Ratio of Outdoor Unit (Standard-COP mode)

1-3. U-10ME1E81 (Cooling)

Capacity Ratio 30-130%

TC: Total capacity (kW), PI: Power input (kW)

Combination(%) :Indoor/outdoor capacity ratio	Outdoor air temp. ℃DB	Indoor air temp. :℃WB													
		16.0		17.0		18.0		19.0		20.0		21.0		22.0	
		TC	PI	TC	PI	TC	PI	TC	PI	TC	PI	TC	PI	TC	PI
		kW	kW	kW	kW	kW	kW	kW	kW	kW	kW	kW	kW	kW	kW
130%	-10.0	30.1	3.61	30.1	3.61	30.1	3.61	30.1	3.61	32.1	3.86	34.1	4.10	36.1	4.34
	-5.0	30.1	3.63	30.1	3.63	30.1	3.63	30.1	3.63	32.1	3.87	34.1	4.11	36.1	4.36
	0.0	30.1	3.64	30.1	3.64	30.1	3.64	30.1	3.64	32.1	3.88	34.1	4.13	36.1	4.38
	5.0	30.1	3.67	30.1	3.67	30.1	3.67	30.1	3.67	32.1	3.92	34.1	4.18	36.1	4.43
	10.0	30.1	3.74	30.1	3.74	30.1	3.74	30.1	3.74	32.1	4.01	34.1	4.28	36.1	4.54
	15.0	30.1	3.93	30.1	3.93	30.1	3.93	30.1	3.93	32.1	4.23	34.1	4.57	36.1	5.03
	20.0	30.1	4.79	30.1	4.79	30.1	4.79	30.1	4.79	32.1	5.30	34.1	5.83	36.1	6.39
	25.0	30.1	5.96	30.1	5.96	30.1	5.96	30.1	5.96	32.1	6.57	34.1	7.20	36.1	7.87
	30.0	30.1	7.24	30.1	7.24	30.1	7.24	30.1	7.24	32.1	7.96	34.1	8.71	36.1	9.50
	35.0	30.1	8.63	30.1	8.63	30.1	8.63	30.1	8.63	32.1	9.46	33.8	10.11	34.4	10.11
	40.0	30.0	10.08	30.0	10.08	30.0	10.08	30.0	10.08	30.7	10.11	31.3	10.11	32.0	10.11
	43.0	28.7	10.11	28.7	10.11	28.7	10.11	28.7	10.11	29.3	10.11	30.0	10.11	30.6	10.11

Combination(%) :Indoor/outdoor capacity ratio	Outdoor air temp. ℃DB	Indoor air temp. :℃WB													
		16.0		17.0		18.0		19.0		20.0		21.0		22.0	
		TC	PI	TC	PI	TC	PI	TC	PI	TC	PI	TC	PI	TC	PI
		kW	kW	kW	kW	kW	kW	kW	kW	kW	kW	kW	kW	kW	kW
120%	-10.0	28.2	3.38	29.4	3.52	29.4	3.52	29.4	3.52	31.4	3.77	33.3	4.00	35.3	4.24
	-5.0	28.2	3.38	29.4	3.54	29.4	3.54	29.4	3.54	31.4	3.77	33.3	4.01	35.3	4.26
	0.0	28.2	3.39	29.4	3.56	29.4	3.56	29.4	3.56	31.4	3.80	33.3	4.04	35.3	4.28
	5.0	28.2	3.41	29.4	3.58	29.4	3.58	29.4	3.58	31.4	3.83	33.3	4.08	35.3	4.33
	10.0	28.2	3.45	29.4	3.65	29.4	3.65	29.4	3.65	31.4	3.91	33.3	4.17	35.3	4.43
	15.0	28.2	3.54	29.4	3.82	29.4	3.82	29.4	3.82	31.4	4.12	33.3	4.41	35.3	4.83
	20.0	28.2	3.93	29.4	4.62	29.4	4.62	29.4	4.62	31.4	5.10	33.3	5.61	35.3	6.15
	25.0	28.2	4.96	29.4	5.76	29.4	5.76	29.4	5.76	31.4	6.33	33.3	6.94	35.3	7.58
	30.0	28.2	6.08	29.4	6.99	29.4	6.99	29.4	6.99	31.4	7.68	33.3	8.39	35.3	9.16
	35.0	28.2	7.31	29.4	8.34	29.4	8.34	29.4	8.34	31.4	9.14	33.3	9.97	34.2	10.11
	40.0	28.2	8.63	29.4	9.80	29.4	9.80	29.4	9.80	30.5	10.11	31.1	10.11	31.8	10.11
	43.0	28.2	9.48	28.5	10.11	28.5	10.11	28.5	10.11	29.1	10.11	29.8	10.11	30.4	10.11

Combination(%) :Indoor/outdoor capacity ratio	Outdoor air temp. ℃DB	Indoor air temp. :℃WB													
		16.0		17.0		18.0		19.0		20.0		21.0		22.0	
		TC	PI	TC	PI	TC	PI	TC	PI	TC	PI	TC	PI	TC	PI
		kW	kW	kW	kW	kW	kW	kW	kW	kW	kW	kW	kW	kW	kW
110%	-10.0	25.3	3.03	27.4	3.28	28.7	3.45	28.7	3.45	30.6	3.67	32.5	3.91	34.4	4.14
	-5.0	25.3	3.03	27.4	3.28	28.7	3.45	28.7	3.45	30.6	3.69	32.5	3.92	34.4	4.15
	0.0	25.3	3.03	27.4	3.29	28.7	3.46	28.7	3.46	30.6	3.70	32.5	3.94	34.4	4.18
	5.0	25.3	3.05	27.4	3.31	28.7	3.49	28.7	3.49	30.6	3.73	32.5	3.98	34.4	4.22
	10.0	25.3	3.09	27.4	3.35	28.7	3.56	28.7	3.56	30.6	3.80	32.5	4.06	34.4	4.32
	15.0	25.3	3.17	27.4	3.47	28.7	3.72	28.7	3.72	30.6	4.00	32.5	4.29	34.4	4.64
	20.0	25.3	3.52	27.4	3.94	28.7	4.45	28.7	4.45	30.6	4.91	32.5	5.39	34.4	5.91
	25.0	25.3	4.43	27.4	4.94	28.7	5.55	28.7	5.55	30.6	6.10	32.5	6.68	34.4	7.29
	30.0	25.3	5.43	27.4	6.05	28.7	6.75	28.7	6.75	30.6	7.41	32.5	8.09	34.4	8.81
	35.0	25.3	6.52	27.4	7.25	28.7	8.06	28.7	8.06	30.6	8.82	32.5	9.62	33.9	10.11
	40.0	25.3	7.70	27.4	8.54	28.7	9.47	28.7	9.47	30.3	10.11	30.9	10.11	31.5	10.11
	43.0	25.3	8.45	27.4	9.37	28.3	10.11	28.3	10.11	28.9	10.11	29.5	10.11	30.2	10.11

Combination(%) :Indoor/outdoor capacity ratio	Outdoor air temp. ℃DB	Indoor air temp. :℃WB													
		16.0		17.0		18.0		19.0		20.0		21.0		22.0	
		TC	PI	TC	PI	TC	PI	TC	PI	TC	PI	TC	PI	TC	PI
		kW	kW	kW	kW	kW	kW	kW	kW	kW	kW	kW	kW	kW	kW
100%	-10.0	22.4	2.68	24.3	2.91	26.1	3.14	28.0	3.36	29.9	3.59	31.7	3.81	33.6	4.04
	-5.0	22.4	2.69	24.3	2.92	26.1	3.14	28.0	3.37	29.9	3.59	31.7	3.82	33.6	4.05
	0.0	22.4	2.70	24.3	2.93	26.1	3.15	28.0	3.38	29.9	3.61	31.7	3.84	33.6	4.07
	5.0	22.4	2.71	24.3	2.94	26.1	3.17	28.0	3.41	29.9	3.64	31.7	3.87	33.6	4.12
	10.0	22.4	2.74	24.3	2.98	26.1	3.22	28.0	3.46	29.9	3.71	31.7	3.96	33.6	4.21
	15.0	22.4	2.82	24.3	3.08	26.1	3.35	28.0	3.62	29.9	3.89	31.7	4.17	33.6	4.45
	20.0	22.4	3.14	24.3	3.49	26.1	3.87	28.0	4.29	29.9	4.72	31.7	5.18	33.6	5.67
	25.0	22.4	3.94	24.3	4.38	26.1	4.85	28.0	5.35	29.9	5.87	31.7	6.43	33.6	7.01
	30.0	22.4	4.82	24.3	5.35	26.1	5.92	28.0	6.51	29.9	7.14	31.7	7.80	33.6	8.49
	35.0	22.4	5.78	24.3	6.41	26.1	7.08	28.0	7.78	29.9	8.51	31.7	9.27	33.6	10.08
	40.0	22.4	6.82	24.3	7.55	26.1	8.33	28.0	9.14	29.9	9.99	30.7	10.11	31.3	10.11
	43.0	22.4	7.48	24.3	8.29	26.1	9.13	28.0	10.01	28.7	10.11	29.3	10.11	29.9	10.11

1. Capacity Ratio of Outdoor Unit (Standard-COP mode)

U-10ME1E81 (Cooling) **Capacity Ratio 30-130%**

TC: Total capacity (kW), PI: Power input (kW)

Combination(%) :Indoor/outdoor capacity ratio	Outdoor air temp. ℃DB	Indoor air temp. :℃WB													
		16.0		17.0		18.0		19.0		20.0		21.0		22.0	
		TC	PI	TC	PI	TC	PI	TC	PI	TC	PI	TC	PI	TC	PI
		kW	kW	kW	kW	kW	kW	kW	kW	kW	kW	kW	kW	kW	kW
90%	-10.0	20.2	2.41	21.8	2.61	23.5	2.82	25.2	3.02	26.9	3.22	28.6	3.42	30.2	3.63
	-5.0	20.2	2.42	21.8	2.62	23.5	2.82	25.2	3.03	26.9	3.23	28.6	3.43	30.2	3.64
	0.0	20.2	2.43	21.8	2.63	23.5	2.83	25.2	3.03	26.9	3.24	28.6	3.45	30.2	3.66
	5.0	20.2	2.44	21.8	2.64	23.5	2.85	25.2	3.06	26.9	3.27	28.6	3.48	30.2	3.69
	10.0	20.2	2.46	21.8	2.67	23.5	2.89	25.2	3.10	26.9	3.31	28.6	3.53	30.2	3.76
	15.0	20.2	2.52	21.8	2.75	23.5	2.98	25.2	3.21	26.9	3.45	28.6	3.69	30.2	3.94
	20.0	20.2	2.75	21.8	3.03	23.5	3.33	25.2	3.66	26.9	4.02	28.6	4.40	30.2	4.79
	25.0	20.2	3.42	21.8	3.80	23.5	4.19	25.2	4.60	26.9	5.03	28.6	5.48	30.2	5.96
	30.0	20.2	4.19	21.8	4.64	23.5	5.11	25.2	5.61	26.9	6.13	28.6	6.67	30.2	7.24
	35.0	20.2	5.04	21.8	5.58	23.5	6.14	25.2	6.72	26.9	7.33	28.6	7.97	30.2	8.63
	40.0	20.2	5.96	21.8	6.58	23.5	7.24	25.2	7.91	26.9	8.62	28.6	9.36	30.1	10.08
	43.0	20.2	6.54	21.8	7.23	23.5	7.94	25.2	8.68	26.9	9.45	28.4	10.11	29.0	10.11

Combination(%) :Indoor/outdoor capacity ratio	Outdoor air temp. ℃DB	Indoor air temp. :℃WB													
		16.0		17.0		18.0		19.0		20.0		21.0		22.0	
		TC	PI	TC	PI	TC	PI	TC	PI	TC	PI	TC	PI	TC	PI
		kW	kW	kW	kW	kW	kW	kW	kW	kW	kW	kW	kW	kW	kW
80%	-10.0	17.9	2.15	19.4	2.33	20.9	2.51	22.4	2.68	23.9	2.86	25.4	3.04	26.9	3.22
	-5.0	17.9	2.15	19.4	2.33	20.9	2.51	22.4	2.69	23.9	2.87	25.4	3.05	26.9	3.23
	0.0	17.9	2.16	19.4	2.33	20.9	2.51	22.4	2.69	23.9	2.88	25.4	3.06	26.9	3.24
	5.0	17.9	2.16	19.4	2.34	20.9	2.53	22.4	2.71	23.9	2.89	25.4	3.08	26.9	3.27
	10.0	17.9	2.18	19.4	2.37	20.9	2.55	22.4	2.74	23.9	2.93	25.4	3.12	26.9	3.31
	15.0	17.9	2.23	19.4	2.42	20.9	2.62	22.4	2.82	23.9	3.03	25.4	3.24	26.9	3.45
	20.0	17.9	2.39	19.4	2.62	20.9	2.86	22.4	3.11	23.9	3.38	25.4	3.68	26.9	4.00
	25.0	17.9	2.95	19.4	3.25	20.9	3.57	22.4	3.91	23.9	4.26	25.4	4.62	26.9	5.00
	30.0	17.9	3.63	19.4	3.99	20.9	4.37	22.4	4.78	23.9	5.20	25.4	5.64	26.9	6.10
	35.0	17.9	4.36	19.4	4.80	20.9	5.26	22.4	5.73	23.9	6.24	25.4	6.75	26.9	7.30
	40.0	17.9	5.16	19.4	5.67	20.9	6.21	22.4	6.77	23.9	7.35	25.4	7.96	26.9	8.58
	43.0	17.9	5.66	19.4	6.23	20.9	6.82	22.4	7.43	23.9	8.07	25.4	8.73	26.9	9.41

Combination(%) :Indoor/outdoor capacity ratio	Outdoor air temp. ℃DB	Indoor air temp. :℃WB													
		16.0		17.0		18.0		19.0		20.0		21.0		22.0	
		TC	PI	TC	PI	TC	PI	TC	PI	TC	PI	TC	PI	TC	PI
		kW	kW	kW	kW	kW	kW	kW	kW	kW	kW	kW	kW	kW	kW
70%	-10.0	15.7	1.87	17.0	2.03	18.3	2.19	19.6	2.35	20.9	2.51	22.2	2.66	23.5	2.82
	-5.0	15.7	1.88	17.0	2.04	18.3	2.19	19.6	2.35	20.9	2.51	22.2	2.67	23.5	2.82
	0.0	15.7	1.88	17.0	2.04	18.3	2.20	19.6	2.36	20.9	2.51	22.2	2.68	23.5	2.83
	5.0	15.7	1.89	17.0	2.05	18.3	2.21	19.6	2.37	20.9	2.53	22.2	2.68	23.5	2.85
	10.0	15.7	1.90	17.0	2.06	18.3	2.23	19.6	2.39	20.9	2.55	22.2	2.72	23.5	2.88
	15.0	15.7	1.93	17.0	2.10	18.3	2.27	19.6	2.44	20.9	2.61	22.2	2.79	23.5	2.97
	20.0	15.7	2.04	17.0	2.23	18.3	2.44	19.6	2.64	20.9	2.85	22.2	3.07	23.5	3.29
	25.0	15.7	2.51	17.0	2.75	18.3	3.01	19.6	3.28	20.9	3.55	22.2	3.84	23.5	4.14
	30.0	15.7	3.09	17.0	3.38	18.3	3.70	19.6	4.02	20.9	4.36	22.2	4.70	23.5	5.06
	35.0	15.7	3.72	17.0	4.08	18.3	4.44	19.6	4.83	20.9	5.24	22.2	5.65	23.5	6.08
	40.0	15.7	4.40	17.0	4.82	18.3	5.26	19.6	5.72	20.9	6.19	22.2	6.67	23.5	7.17
	43.0	15.7	4.83	17.0	5.30	18.3	5.78	19.6	6.28	20.9	6.79	22.2	7.32	23.5	7.87

Combination(%) :Indoor/outdoor capacity ratio	Outdoor air temp. ℃DB	Indoor air temp. :℃WB													
		16.0		17.0		18.0		19.0		20.0		21.0		22.0	
		TC	PI	TC	PI	TC	PI	TC	PI	TC	PI	TC	PI	TC	PI
		kW	kW	kW	kW	kW	kW	kW	kW	kW	kW	kW	kW	kW	kW
60%	-10.0	13.4	1.61	14.6	1.74	15.7	1.87	16.8	2.02	17.9	2.15	19.0	2.28	20.2	2.41
	-5.0	13.4	1.61	14.6	1.74	15.7	1.88	16.8	2.02	17.9	2.15	19.0	2.28	20.2	2.42
	0.0	13.4	1.61	14.6	1.75	15.7	1.88	16.8	2.02	17.9	2.16	19.0	2.29	20.2	2.43
	5.0	13.4	1.62	14.6	1.75	15.7	1.89	16.8	2.02	17.9	2.16	19.0	2.30	20.2	2.44
	10.0	13.4	1.63	14.6	1.76	15.7	1.90	16.8	2.04	17.9	2.18	19.0	2.32	20.2	2.46
	15.0	13.4	1.64	14.6	1.79	15.7	1.93	16.8	2.07	17.9	2.22	19.0	2.37	20.2	2.51
	20.0	13.4	1.72	14.6	1.87	15.7	2.04	16.8	2.20	17.9	2.37	19.0	2.54	20.2	2.72
	25.0	13.4	2.12	14.6	2.31	15.7	2.51	16.8	2.71	17.9	2.92	19.0	3.14	20.2	3.37
	30.0	13.4	2.60	14.6	2.83	15.7	3.07	16.8	3.33	17.9	3.59	19.0	3.86	20.2	4.13
	35.0	13.4	3.13	14.6	3.41	15.7	3.70	16.8	4.00	17.9	4.32	19.0	4.64	20.2	4.97
	40.0	13.4	3.70	14.6	4.03	15.7	4.38	16.8	4.74	17.9	5.11	19.0	5.48	20.2	5.88
	43.0	13.4	4.06	14.6	4.43	15.7	4.82	16.8	5.20	17.9	5.61	19.0	6.03	20.2	6.46

1. Capacity Ratio of Outdoor Unit (Standard-COP mode)

U-10ME1E81 (Cooling) **Capacity Ratio 30-130%**

TC: Total capacity (kW), PI: Power input (kW)

Combination(%) :Indoor/outdoor capacity ratio	Outdoor air temp. ℃DB	Indoor air temp. :℃WB													
		16.0		17.0		18.0		19.0		20.0		21.0		22.0	
		TC	PI	TC	PI	TC	PI	TC	PI	TC	PI	TC	PI	TC	PI
		kW	kW	kW	kW	kW	kW	kW	kW	kW	kW	kW	kW	kW	kW
50%	-10.0	11.2	1.34	12.1	1.45	13.1	1.56	14.0	1.67	14.9	1.79	15.9	1.90	16.8	2.02
	-5.0	11.2	1.34	12.1	1.45	13.1	1.56	14.0	1.68	14.9	1.79	15.9	1.90	16.8	2.02
	0.0	11.2	1.35	12.1	1.45	13.1	1.56	14.0	1.68	14.9	1.79	15.9	1.91	16.8	2.02
	5.0	11.2	1.35	12.1	1.45	13.1	1.57	14.0	1.68	14.9	1.80	15.9	1.91	16.8	2.02
	10.0	11.2	1.35	12.1	1.46	13.1	1.58	14.0	1.69	14.9	1.80	15.9	1.92	16.8	2.04
	15.0	11.2	1.36	12.1	1.48	13.1	1.59	14.0	1.71	14.9	1.83	15.9	1.95	16.8	2.07
	20.0	11.2	1.41	12.1	1.53	13.1	1.66	14.0	1.79	14.9	1.92	15.9	2.05	16.8	2.19
	25.0	11.2	1.71	12.1	1.91	13.1	2.05	14.0	2.19	14.9	2.36	15.9	2.51	16.8	2.68
	30.0	11.2	2.15	12.1	2.33	13.1	2.51	14.0	2.70	14.9	2.89	15.9	3.10	16.8	3.30
	35.0	11.2	2.58	12.1	2.79	13.1	3.02	14.0	3.24	14.9	3.48	15.9	3.73	16.8	3.98
	40.0	11.2	3.04	12.1	3.30	13.1	3.57	14.0	3.84	14.9	4.12	15.9	4.41	16.8	4.71
	43.0	11.2	3.34	12.1	3.63	13.1	3.92	14.0	4.22	14.9	4.53	15.9	4.85	16.8	5.17

Combination(%) :Indoor/outdoor capacity ratio	Outdoor air temp. ℃DB	Indoor air temp. :℃WB													
		16.0		17.0		18.0		19.0		20.0		21.0		22.0	
		TC	PI	TC	PI	TC	PI	TC	PI	TC	PI	TC	PI	TC	PI
		kW	kW	kW	kW	kW	kW	kW	kW	kW	kW	kW	kW	kW	kW
40%	-10.0	9.0	1.07	9.7	1.16	10.4	1.25	11.2	1.34	12.0	1.43	12.7	1.52	13.4	1.61
	-5.0	9.0	1.07	9.7	1.16	10.4	1.25	11.2	1.34	12.0	1.43	12.7	1.52	13.4	1.61
	0.0	9.0	1.07	9.7	1.17	10.4	1.25	11.2	1.35	12.0	1.43	12.7	1.52	13.4	1.61
	5.0	9.0	1.07	9.7	1.17	10.4	1.25	11.2	1.35	12.0	1.44	12.7	1.52	13.4	1.62
	10.0	9.0	1.08	9.7	1.17	10.4	1.26	11.2	1.35	12.0	1.44	12.7	1.53	13.4	1.63
	15.0	9.0	1.09	9.7	1.17	10.4	1.27	11.2	1.36	12.0	1.45	12.7	1.55	13.4	1.64
	20.0	9.0	1.10	9.7	1.21	10.4	1.31	11.2	1.40	12.0	1.50	12.7	1.60	13.4	1.70
	25.0	9.0	1.28	9.7	1.41	10.4	1.54	11.2	1.68	12.0	1.83	12.7	1.98	13.4	2.09
	30.0	9.0	1.73	9.7	1.87	10.4	2.00	11.2	2.13	12.0	2.27	12.7	2.41	13.4	2.56
	35.0	9.0	2.07	9.7	2.23	10.4	2.39	11.2	2.56	12.0	2.73	12.7	2.90	13.4	3.08
	40.0	9.0	2.44	9.7	2.62	10.4	2.82	11.2	3.02	12.0	3.23	12.7	3.43	13.4	3.65
	43.0	9.0	2.67	9.7	2.88	10.4	3.10	11.2	3.31	12.0	3.54	12.7	3.77	13.4	4.01

Combination(%) :Indoor/outdoor capacity ratio	Outdoor air temp. ℃DB	Indoor air temp. :℃WB													
		16.0		17.0		18.0		19.0		20.0		21.0		22.0	
		TC	PI	TC	PI	TC	PI	TC	PI	TC	PI	TC	PI	TC	PI
		kW	kW	kW	kW	kW	kW	kW	kW	kW	kW	kW	kW	kW	kW
30%	-10.0	6.7	0.80	7.3	0.87	7.8	0.94	8.4	1.00	9.0	1.07	9.5	1.14	10.1	1.21
	-5.0	6.7	0.80	7.3	0.87	7.8	0.94	8.4	1.00	9.0	1.07	9.5	1.14	10.1	1.21
	0.0	6.7	0.81	7.3	0.87	7.8	0.94	8.4	1.00	9.0	1.07	9.5	1.14	10.1	1.21
	5.0	6.7	0.81	7.3	0.87	7.8	0.94	8.4	1.01	9.0	1.07	9.5	1.14	10.1	1.21
	10.0	6.7	0.81	7.3	0.88	7.8	0.94	8.4	1.01	9.0	1.08	9.5	1.14	10.1	1.21
	15.0	6.7	0.81	7.3	0.88	7.8	0.95	8.4	1.02	9.0	1.08	9.5	1.15	10.1	1.22
	20.0	6.7	0.82	7.3	0.89	7.8	0.96	8.4	1.03	9.0	1.10	9.5	1.17	10.1	1.25
	25.0	6.7	0.89	7.3	0.98	7.8	1.07	8.4	1.16	9.0	1.25	9.5	1.35	10.1	1.44
	30.0	6.7	1.36	7.3	1.45	7.8	1.54	8.4	1.63	9.0	1.72	9.5	1.81	10.1	1.91
	35.0	6.7	1.61	7.3	1.72	7.8	1.83	8.4	1.94	9.0	2.05	9.5	2.17	10.1	2.29
	40.0	6.7	1.87	7.3	2.01	7.8	2.14	8.4	2.27	9.0	2.41	9.5	2.55	10.1	2.70
	43.0	6.7	2.05	7.3	2.19	7.8	2.34	8.4	2.49	9.0	2.65	9.5	2.80	10.1	2.96

1. Capacity Ratio of Outdoor Unit (Standard-COP mode)

1-4. U-10ME1E81 (Heating)

Capacity Ratio 30-130%

TC: Total capacity (kW), PI: Power input (kW)

Combination(%) :Indoor/outdoor capacity ratio	Outdoor air temp.		Indoor air temp. : ℃CDB													
			15.0		17.0		19.0		20.0		21.0		23.0		25.0	
			TC	PI	TC	PI	TC	PI	TC	PI	TC	PI	TC	PI	TC	PI
	℃CDB	℃CWB	kW	kW	kW	kW	kW	kW	kW	kW	kW	kW	kW	kW	kW	kW
130%	-24.9	-25.0	25.4	9.90	24.1	9.24	22.7	8.58	22.0	8.26	22.0	8.26	22.0	8.26	22.0	8.26
	-19.8	-20.0	26.7	9.98	25.4	9.38	23.9	8.72	23.2	8.39	23.2	8.39	23.2	8.39	23.2	8.39
	-14.7	-15.0	28.0	9.98	26.9	9.58	25.5	8.92	24.7	8.59	24.7	8.59	24.7	8.59	24.7	8.59
	-9.6	-10.0	29.6	9.98	28.9	9.88	27.4	9.21	26.6	8.87	26.6	8.87	26.6	8.87	26.6	8.87
	-4.4	-5.0	31.7	9.98	31.1	9.98	30.0	9.62	29.2	9.27	29.2	9.27	29.2	9.27	29.2	9.27
	-1.8	-2.5	32.9	9.98	32.4	9.98	31.7	9.88	30.8	9.52	30.8	9.52	30.8	9.52	30.8	9.52
	0.8	0.0	34.4	9.98	33.8	9.98	33.2	9.98	32.7	9.82	32.7	9.82	32.7	9.82	32.7	9.82
	2.8	2.0	35.7	9.98	35.1	9.98	34.5	9.98	33.9	9.82	33.9	9.82	33.9	9.82	33.9	9.82
	6.0	5.0	37.6	9.98	37.0	9.98	35.1	9.42	33.9	8.98	33.9	8.98	33.9	8.98	33.9	8.98
	7.0	6.0	38.3	9.98	37.6	9.97	35.1	9.12	33.9	8.71	33.9	8.71	33.9	8.71	33.9	8.71
	8.6	7.5	39.4	9.98	37.6	9.49	35.1	8.69	33.9	8.29	33.9	8.29	33.9	8.29	33.9	8.29
	11.2	10.0	40.1	9.43	37.6	8.63	35.1	7.87	33.9	7.51	33.9	7.51	33.9	7.51	33.9	7.51
	16.4	15.0	40.1	7.62	37.6	6.99	35.1	6.38	33.9	6.09	33.9	6.09	33.9	6.09	33.9	6.09

Combination(%) :Indoor/outdoor capacity ratio	Outdoor air temp.		Indoor air temp. : ℃CDB													
			15.0		17.0		19.0		20.0		21.0		23.0		25.0	
			TC	PI	TC	PI	TC	PI	TC	PI	TC	PI	TC	PI	TC	PI
	℃CDB	℃CWB	kW	kW	kW	kW	kW	kW	kW	kW	kW	kW	kW	kW	kW	kW
120%	-24.9	-25.0	25.5	9.77	24.1	9.12	22.7	8.49	22.0	8.17	22.0	8.17	22.0	8.17	22.0	8.17
	-19.8	-20.0	26.8	9.91	25.4	9.27	24.0	8.63	23.2	8.31	23.2	8.31	23.2	8.31	23.2	8.31
	-14.7	-15.0	28.2	9.98	27.0	9.48	25.5	8.83	24.8	8.51	24.8	8.51	24.8	8.51	24.8	8.51
	-9.6	-10.0	29.8	9.98	29.0	9.78	27.4	9.12	26.6	8.79	26.6	8.79	26.6	8.79	26.6	8.79
	-4.4	-5.0	31.8	9.98	31.3	9.98	30.0	9.52	29.2	9.19	29.2	9.19	29.2	9.19	29.2	9.19
	-1.8	-2.5	33.1	9.98	32.5	9.98	31.7	9.78	30.8	9.43	30.8	9.43	30.8	9.43	30.8	9.43
	0.8	0.0	34.6	9.98	34.0	9.98	33.4	9.98	32.7	9.72	32.7	9.72	32.7	9.72	32.4	9.05
	2.8	2.0	35.8	9.98	35.2	9.98	34.3	9.85	33.1	9.38	33.1	9.38	33.1	9.38	32.4	8.64
	6.0	5.0	37.7	9.98	36.8	9.86	34.3	9.02	33.1	8.62	33.1	8.62	33.1	8.62	32.4	8.01
	7.0	6.0	38.4	9.98	36.8	9.55	34.3	8.75	33.1	8.36	33.1	8.36	33.1	8.36	32.4	7.73
	8.6	7.5	39.2	9.88	36.8	9.10	34.3	8.32	33.1	7.93	33.1	7.93	33.1	7.93	32.4	7.30
	11.2	10.0	39.2	8.98	36.8	8.23	34.3	7.52	33.1	7.18	33.1	7.18	33.1	7.18	32.4	6.60
	16.4	15.0	39.2	7.24	36.8	6.65	34.3	6.08	33.1	5.81	33.1	5.81	33.1	5.81	32.4	5.37

Combination(%) :Indoor/outdoor capacity ratio	Outdoor air temp.		Indoor air temp. : ℃CDB													
			15.0		17.0		19.0		20.0		21.0		23.0		25.0	
			TC	PI	TC	PI	TC	PI	TC	PI	TC	PI	TC	PI	TC	PI
	℃CDB	℃CWB	kW	kW	kW	kW	kW	kW	kW	kW	kW	kW	kW	kW	kW	kW
110%	-24.9	-25.0	25.5	9.64	24.2	9.02	22.8	8.39	22.1	8.09	22.1	8.09	21.9	7.86	20.3	7.23
	-19.8	-20.0	26.9	9.80	25.5	9.16	24.0	8.54	23.3	8.23	23.3	8.23	23.2	8.00	21.5	7.36
	-14.7	-15.0	28.4	9.98	27.0	9.38	25.5	8.74	24.8	8.42	24.8	8.42	24.7	8.21	22.9	7.54
	-9.6	-10.0	30.0	9.98	29.0	9.68	27.5	9.03	26.7	8.71	26.7	8.71	26.6	8.49	24.8	7.80
	-4.4	-5.0	32.0	9.98	31.5	9.98	30.1	9.43	29.2	9.10	29.2	9.10	29.2	9.10	27.2	8.16
	-1.8	-2.5	33.3	9.98	32.7	9.98	31.7	9.68	30.8	9.35	30.8	9.35	30.8	9.35	28.7	8.37
	0.8	0.0	34.7	9.98	34.1	9.98	33.5	9.94	32.3	9.46	32.3	9.46	31.6	8.91	28.9	8.01
	2.8	2.0	35.9	9.98	35.2	9.98	33.5	9.42	32.3	8.99	32.3	8.99	31.6	8.49	28.9	7.66
	6.0	5.0	37.7	9.98	35.9	9.43	33.5	8.65	32.3	8.27	32.3	8.27	31.6	7.86	28.9	7.08
	7.0	6.0	38.3	9.93	35.9	9.15	33.5	8.40	32.3	8.03	32.3	8.03	31.6	7.60	28.9	6.84
	8.6	7.5	38.3	9.45	35.9	8.69	33.5	7.94	32.3	7.58	32.3	7.58	31.6	7.17	28.9	6.45
	11.2	10.0	38.3	8.54	35.9	7.84	33.5	7.18	32.3	6.86	32.3	6.86	31.6	6.48	28.9	5.84
	16.4	15.0	38.3	6.87	35.9	6.32	33.5	5.79	32.3	5.54	32.3	5.54	31.6	5.25	28.9	4.74

Combination(%) :Indoor/outdoor capacity ratio	Outdoor air temp.		Indoor air temp. : ℃CDB													
			15.0		17.0		19.0		20.0		21.0		23.0		25.0	
			TC	PI	TC	PI	TC	PI	TC	PI	TC	PI	TC	PI	TC	PI
	℃CDB	℃CWB	kW	kW	kW	kW	kW	kW	kW	kW	kW	kW	kW	kW	kW	kW
100%	-24.9	-25.0	25.5	9.52	24.2	8.90	22.8	8.30	22.1	8.00	21.4	7.70	19.9	7.12	18.5	6.56
	-19.8	-20.0	26.9	9.68	25.5	9.06	24.0	8.45	23.3	8.15	22.6	7.85	21.1	7.25	19.5	6.68
	-14.7	-15.0	28.5	9.91	27.1	9.28	25.6	8.66	24.8	8.35	24.0	8.04	22.5	7.43	20.8	6.84
	-9.6	-10.0	30.2	9.98	29.1	9.58	27.5	8.95	26.7	8.63	25.9	8.31	24.2	7.69	22.5	7.07
	-4.4	-5.0	32.2	9.98	31.7	9.98	30.1	9.35	29.2	9.02	28.3	8.69	26.6	8.03	24.7	7.39
	-1.8	-2.5	33.5	9.98	32.9	9.98	31.7	9.59	30.8	9.25	29.9	8.92	28.0	8.25	25.7	7.42
	0.8	0.0	34.9	9.98	34.2	9.98	32.7	9.48	31.5	9.04	30.3	8.61	28.0	7.80	25.7	7.03
	2.8	2.0	35.9	9.98	35.0	9.84	32.7	8.99	31.5	8.59	30.3	8.20	28.0	7.45	25.7	6.74
	6.0	5.0	37.3	9.79	35.0	9.02	32.7	8.29	31.5	7.94	30.3	7.60	28.0	6.89	25.7	6.21
	7.0	6.0	37.3	9.48	35.0	8.76	32.7	8.04	31.5	7.68	30.3	7.33	28.0	6.64	25.7	5.99
	8.6	7.5	37.3	9.00	35.0	8.27	32.7	7.58	31.5	7.24	30.3	6.91	28.0	6.27	25.7	5.66
	11.2	10.0	37.3	8.11	35.0	7.46	32.7	6.84	31.5	6.54	30.3	6.24	28.0	5.68	25.7	5.12
	16.4	15.0	37.3	6.50	35.0	6.00	32.7	5.51	31.5	5.28	30.3	5.04	28.0	4.59	25.7	4.16

1. Capacity Ratio of Outdoor Unit (Standard-COP mode)

U-10ME1E81 (Heating)

Capacity Ratio 30-130%

TC: Total capacity (kW), PI: Power input (kW)

Combination(%) :Indoor/outdoor capacity ratio	Outdoor air temp.		Indoor air temp. : ℃CDB													
			15.0		17.0		19.0		20.0		21.0		23.0		25.0	
			TC	PI	TC	PI	TC	PI	TC	PI	TC	PI	TC	PI	TC	PI
	℃CDB	℃CWB	kW	kW	kW	kW	kW	kW	kW	kW	kW	kW	kW	kW	kW	kW
90%	-24.9	-25.0	25.8	9.09	24.4	8.53	22.9	7.99	22.2	7.72	21.5	7.45	20.0	6.92	18.5	6.41
	-19.8	-20.0	27.2	9.27	25.7	8.71	24.2	8.15	23.5	7.87	22.7	7.60	21.2	7.06	19.6	6.53
	-14.7	-15.0	28.8	9.52	27.3	8.94	25.7	8.36	24.9	8.08	24.2	7.80	22.5	7.23	20.9	6.69
	-9.6	-10.0	30.9	9.85	29.3	9.25	27.7	8.66	26.8	8.36	26.0	8.06	24.3	7.48	22.5	6.91
	-4.4	-5.0	33.0	9.98	31.5	9.47	29.4	8.69	28.4	8.32	27.3	7.95	25.2	7.25	23.1	6.59
	-1.8	-2.5	33.6	9.75	31.5	8.99	29.4	8.27	28.4	7.93	27.3	7.58	25.2	6.93	23.1	6.30
	0.8	0.0	33.6	9.21	31.5	8.52	29.4	7.85	28.4	7.53	27.3	7.21	25.2	6.60	23.1	6.01
	2.8	2.0	33.6	8.78	31.5	8.13	29.4	7.51	28.4	7.21	27.3	6.91	25.2	6.32	23.1	5.75
	6.0	5.0	33.6	8.06	31.5	7.46	29.4	6.87	28.4	6.59	27.3	6.31	25.2	5.76	23.1	5.24
	7.0	6.0	33.6	7.76	31.5	7.17	29.4	6.61	28.4	6.34	27.3	6.07	25.2	5.55	23.1	5.05
	8.6	7.5	33.6	7.28	31.5	6.74	29.4	6.22	28.4	5.97	27.3	5.71	25.2	5.23	23.1	4.75
	11.2	10.0	33.6	6.54	31.5	6.06	29.4	5.59	28.4	5.37	27.3	5.15	25.2	4.71	23.1	4.29
	16.4	15.0	33.6	5.18	31.5	4.82	29.4	4.46	28.4	4.29	27.3	4.12	25.2	3.79	23.1	3.46

Combination(%) :Indoor/outdoor capacity ratio	Outdoor air temp.		Indoor air temp. : ℃CDB													
			15.0		17.0		19.0		20.0		21.0		23.0		25.0	
			TC	PI	TC	PI	TC	PI	TC	PI	TC	PI	TC	PI	TC	PI
	℃CDB	℃CWB	kW	kW	kW	kW	kW	kW	kW	kW	kW	kW	kW	kW	kW	kW
80%	-24.9	-25.0	26.1	8.79	24.7	8.28	23.2	7.78	22.5	7.53	21.7	7.29	20.2	6.81	18.7	6.35
	-19.8	-20.0	27.5	8.99	26.0	8.47	24.5	7.96	23.7	7.70	22.9	7.45	21.4	6.95	19.8	6.47
	-14.7	-15.0	29.2	9.25	27.6	8.72	26.0	8.18	25.2	7.91	24.3	7.60	22.4	6.99	20.5	6.42
	-9.6	-10.0	29.9	8.92	28.0	8.29	26.1	7.68	25.2	7.38	24.3	7.10	22.4	6.54	20.5	6.00
	-4.4	-5.0	29.9	8.22	28.0	7.65	26.1	7.10	25.2	6.84	24.3	6.57	22.4	6.06	20.5	5.56
	-1.8	-2.5	29.9	7.86	28.0	7.33	26.1	6.80	25.2	6.55	24.3	6.30	22.4	5.81	20.5	5.34
	0.8	0.0	29.9	7.50	28.0	6.98	26.1	6.48	25.2	6.24	24.3	5.99	22.4	5.52	20.5	5.07
	2.8	2.0	29.9	7.10	28.0	6.62	26.1	6.14	25.2	5.91	24.3	5.68	22.4	5.24	20.5	4.80
	6.0	5.0	29.9	6.43	28.0	5.99	26.1	5.57	25.2	5.36	24.3	5.15	22.4	4.75	20.5	4.35
	7.0	6.0	29.9	6.17	28.0	5.76	26.1	5.35	25.2	5.15	24.3	4.95	22.4	4.56	20.5	4.19
	8.6	7.5	29.9	5.78	28.0	5.39	26.1	5.02	25.2	4.83	24.3	4.65	22.4	4.29	20.5	3.93
	11.2	10.0	29.9	5.15	28.0	4.82	26.1	4.49	25.2	4.33	24.3	4.17	22.4	3.86	20.5	3.54
	16.4	15.0	29.9	4.03	28.0	3.79	26.1	3.55	25.2	3.43	24.3	3.31	22.4	3.08	20.5	2.85

Combination(%) :Indoor/outdoor capacity ratio	Outdoor air temp.		Indoor air temp. : ℃CDB													
			15.0		17.0		19.0		20.0		21.0		23.0		25.0	
			TC	PI	TC	PI	TC	PI	TC	PI	TC	PI	TC	PI	TC	PI
	℃CDB	℃CWB	kW	kW	kW	kW	kW	kW	kW	kW	kW	kW	kW	kW	kW	kW
70%	-24.9	-25.0	26.1	8.38	24.5	7.86	22.9	7.37	22.1	7.13	21.2	6.88	19.6	6.43	18.0	5.98
	-19.8	-20.0	26.1	7.94	24.5	7.46	22.9	6.99	22.1	6.76	21.2	6.53	19.6	6.09	18.0	5.67
	-14.7	-15.0	26.1	7.51	24.5	7.05	22.9	6.60	22.1	6.39	21.2	6.17	19.6	5.75	18.0	5.35
	-9.6	-10.0	26.1	7.07	24.5	6.64	22.9	6.21	22.1	6.01	21.2	5.81	19.6	5.41	18.0	5.02
	-4.4	-5.0	26.1	6.60	24.5	6.19	22.9	5.80	22.1	5.61	21.2	5.42	19.6	5.05	18.0	4.68
	-1.8	-2.5	26.1	6.27	24.5	5.89	22.9	5.51	22.1	5.33	21.2	5.15	19.6	4.80	18.0	4.45
	0.8	0.0	26.1	5.90	24.5	5.54	22.9	5.19	22.1	5.02	21.2	4.85	19.6	4.52	18.0	4.19
	2.8	2.0	26.1	5.57	24.5	5.24	22.9	4.92	22.1	4.75	21.2	4.59	19.6	4.28	18.0	3.96
	6.0	5.0	26.1	5.01	24.5	4.72	22.9	4.42	22.1	4.28	21.2	4.13	19.6	3.84	18.0	3.56
	7.0	6.0	26.1	4.79	24.5	4.52	22.9	4.24	22.1	4.10	21.2	3.96	19.6	3.69	18.0	3.41
	8.6	7.5	26.1	4.47	24.5	4.22	22.9	3.96	22.1	3.84	21.2	3.71	19.6	3.46	18.0	3.20
	11.2	10.0	26.1	3.96	24.5	3.75	22.9	3.53	22.1	3.43	21.2	3.32	19.6	3.10	18.0	2.88
	16.4	15.0	26.1	3.06	24.5	2.91	22.9	2.76	22.1	2.69	21.2	2.61	19.6	2.46	18.0	2.30

Combination(%) :Indoor/outdoor capacity ratio	Outdoor air temp.		Indoor air temp. : ℃CDB													
			15.0		17.0		19.0		20.0		21.0		23.0		25.0	
			TC	PI	TC	PI	TC	PI	TC	PI	TC	PI	TC	PI	TC	PI
	℃CDB	℃CWB	kW	kW	kW	kW	kW	kW	kW	kW	kW	kW	kW	kW	kW	kW
60%	-24.9	-25.0	22.4	6.50	21.0	6.17	19.6	5.85	18.9	5.70	18.2	5.54	16.8	5.24	15.4	4.95
	-19.8	-20.0	22.4	6.21	21.0	5.89	19.6	5.58	18.9	5.43	18.2	5.28	16.8	4.98	15.4	4.69
	-14.7	-15.0	22.4	5.91	21.0	5.61	19.6	5.31	18.9	5.16	18.2	5.02	16.8	4.72	15.4	4.44
	-9.6	-10.0	22.4	5.58	21.0	5.30	19.6	5.02	18.9	4.88	18.2	4.74	16.8	4.46	15.4	4.18
	-4.4	-5.0	22.4	5.11	21.0	4.85	19.6	4.60	18.9	4.48	18.2	4.35	16.8	4.11	15.4	3.86
	-1.8	-2.5	22.4	4.83	21.0	4.60	19.6	4.36	18.9	4.24	18.2	4.12	16.8	3.89	15.4	3.65
	0.8	0.0	22.4	4.53	21.0	4.31	19.6	4.09	18.9	3.98	18.2	3.87	16.8	3.65	15.4	3.43
	2.8	2.0	22.4	4.26	21.0	4.06	19.6	3.85	18.9	3.75	18.2	3.64	16.8	3.43	15.4	3.21
	6.0	5.0	22.4	3.79	21.0	3.62	19.6	3.43	18.9	3.33	18.2	3.24	16.8	3.05	15.4	2.85
	7.0	6.0	22.4	3.62	21.0	3.46	19.6	3.28	18.9	3.19	18.2	3.10	16.8	2.92	15.4	2.73
	8.6	7.5	22.4	3.36	21.0	3.22	19.6	3.06	18.9	2.98	18.2	2.90	16.8	2.73	15.4	2.57
	11.2	10.0	22.4	2.96	21.0	2.84	19.6	2.71	18.9	2.64	18.2	2.58	16.8	2.44	15.4	2.30
	16.4	15.0	22.4	2.66	21.0	2.53	19.6	2.38	18.9	2.31	18.2	2.24	16.8	2.10	15.4	1.96

1. Capacity Ratio of Outdoor Unit (Standard-COP mode)

U-10ME1E81 (Heating) **Capacity Ratio 30-130%**

TC: Total capacity (kW), PI: Power input (kW)

Combination(%) :Indoor/outdoor capacity ratio	Outdoor air temp.		Indoor air temp. : ℃CDB													
			15.0		17.0		19.0		20.0		21.0		23.0		25.0	
			TC	PI	TC	PI	TC	PI	TC	PI	TC	PI	TC	PI	TC	PI
	℃CDB	℃CWB	kW	kW	kW	kW	kW	kW	kW	kW	kW	kW	kW	kW	kW	kW
50%	-24.9	-25.0	18.7	5.05	17.5	4.85	16.3	4.65	15.8	4.55	15.2	4.45	14.0	4.26	12.8	4.06
	-19.8	-20.0	18.7	4.85	17.5	4.65	16.3	4.45	15.8	4.35	15.2	4.25	14.0	4.06	12.8	3.86
	-14.7	-15.0	18.7	4.58	17.5	4.42	16.3	4.25	15.8	4.15	15.2	4.06	14.0	3.86	12.8	3.66
	-9.6	-10.0	18.7	4.26	17.5	4.11	16.3	3.95	15.8	3.87	15.2	3.79	14.0	3.62	12.8	3.44
	-4.4	-5.0	18.7	3.88	17.5	3.74	16.3	3.59	15.8	3.52	15.2	3.45	14.0	3.29	12.8	3.13
	-1.8	-2.5	18.7	3.65	17.5	3.52	16.3	3.39	15.8	3.32	15.2	3.25	14.0	3.10	12.8	2.96
	0.8	0.0	18.7	3.39	17.5	3.28	16.3	3.16	15.8	3.10	15.2	3.03	14.0	2.90	12.8	2.72
	2.8	2.0	18.7	3.17	17.5	3.06	16.3	2.95	15.8	2.89	15.2	2.82	14.0	2.67	12.8	2.52
	6.0	5.0	18.7	2.79	17.5	2.69	16.3	2.59	15.8	2.53	15.2	2.47	14.0	2.36	12.8	2.23
	7.0	6.0	18.7	2.65	17.5	2.57	16.3	2.47	15.8	2.42	15.2	2.37	14.0	2.26	12.8	2.14
	8.6	7.5	18.7	2.45	17.5	2.37	16.3	2.30	15.8	2.25	15.2	2.20	14.0	2.11	12.8	2.00
	11.2	10.0	18.7	2.29	17.5	2.17	16.3	2.05	15.8	2.00	15.2	1.96	14.0	1.88	12.8	1.80
	16.4	15.0	18.7	2.29	17.5	2.17	16.3	2.05	15.8	2.00	15.2	1.94	14.0	1.81	12.8	1.70

Combination(%) :Indoor/outdoor capacity ratio	Outdoor air temp.		Indoor air temp. : ℃CDB													
			15.0		17.0		19.0		20.0		21.0		23.0		25.0	
			TC	PI	TC	PI	TC	PI	TC	PI	TC	PI	TC	PI	TC	PI
	℃CDB	℃CWB	kW	kW	kW	kW	kW	kW	kW	kW	kW	kW	kW	kW	kW	kW
40%	-24.9	-25.0	14.9	3.90	14.0	3.79	13.1	3.66	12.6	3.60	12.1	3.54	11.2	3.42	10.3	3.29
	-19.8	-20.0	14.9	3.70	14.0	3.62	13.1	3.51	12.6	3.45	12.1	3.39	11.2	3.26	10.3	3.12
	-14.7	-15.0	14.9	3.47	14.0	3.39	13.1	3.31	12.6	3.26	12.1	3.21	11.2	3.10	10.3	2.96
	-9.6	-10.0	14.9	3.21	14.0	3.14	13.1	3.06	12.6	3.02	12.1	2.97	11.2	2.88	10.3	2.77
	-4.4	-5.0	14.9	2.88	14.0	2.83	13.1	2.76	12.6	2.72	12.1	2.68	11.2	2.60	10.3	2.48
	-1.8	-2.5	14.9	2.69	14.0	2.64	13.1	2.58	12.6	2.55	12.1	2.50	11.2	2.40	10.3	2.27
	0.8	0.0	14.9	2.49	14.0	2.43	13.1	2.36	12.6	2.31	12.1	2.27	11.2	2.17	10.3	2.07
	2.8	2.0	14.9	2.28	14.0	2.23	13.1	2.17	12.6	2.13	12.1	2.09	11.2	2.01	10.3	1.92
	6.0	5.0	14.9	1.97	14.0	1.93	13.1	1.88	12.6	1.86	12.1	1.84	11.2	1.77	10.3	1.70
	7.0	6.0	14.9	1.91	14.0	1.84	13.1	1.80	12.6	1.77	12.1	1.75	11.2	1.70	10.3	1.64
	8.6	7.5	14.9	1.91	14.0	1.81	13.1	1.72	12.6	1.67	12.1	1.63	11.2	1.59	10.3	1.54
	11.2	10.0	14.9	1.91	14.0	1.81	13.1	1.72	12.6	1.67	12.1	1.63	11.2	1.53	10.3	1.44
	16.4	15.0	14.9	1.91	14.0	1.81	13.1	1.72	12.6	1.67	12.1	1.63	11.2	1.53	10.3	1.44

Combination(%) :Indoor/outdoor capacity ratio	Outdoor air temp.		Indoor air temp. : ℃CDB													
			15.0		17.0		19.0		20.0		21.0		23.0		25.0	
			TC	PI	TC	PI	TC	PI	TC	PI	TC	PI	TC	PI	TC	PI
	℃CDB	℃CWB	kW	kW	kW	kW	kW	kW	kW	kW	kW	kW	kW	kW	kW	kW
30%	-24.9	-25.0	11.2	2.93	10.5	2.89	9.8	2.81	9.5	2.77	9.1	2.74	8.4	2.66	7.7	2.58
	-19.8	-20.0	11.2	2.76	10.5	2.73	9.8	2.69	9.5	2.66	9.1	2.61	8.4	2.53	7.7	2.44
	-14.7	-15.0	11.2	2.58	10.5	2.56	9.8	2.52	9.5	2.50	9.1	2.47	8.4	2.40	7.7	2.31
	-9.6	-10.0	11.2	2.37	10.5	2.34	9.8	2.31	9.5	2.30	9.1	2.27	8.4	2.22	7.7	2.12
	-4.4	-5.0	11.2	2.10	10.5	2.07	9.8	2.02	9.5	1.99	9.1	1.96	8.4	1.89	7.7	1.81
	-1.8	-2.5	11.2	1.90	10.5	1.87	9.8	1.84	9.5	1.81	9.1	1.78	8.4	1.73	7.7	1.67
	0.8	0.0	11.2	1.70	10.5	1.68	9.8	1.65	9.5	1.64	9.1	1.62	8.4	1.57	7.7	1.52
	2.8	2.0	11.2	1.54	10.5	1.54	9.8	1.52	9.5	1.51	9.1	1.49	8.4	1.46	7.7	1.41
	6.0	5.0	11.2	1.53	10.5	1.46	9.8	1.39	9.5	1.35	9.1	1.32	8.4	1.29	7.7	1.26
	7.0	6.0	11.2	1.53	10.5	1.46	9.8	1.39	9.5	1.35	9.1	1.32	8.4	1.25	7.7	1.21
	8.6	7.5	11.2	1.53	10.5	1.46	9.8	1.39	9.5	1.35	9.1	1.32	8.4	1.25	7.7	1.18
	11.2	10.0	11.2	1.53	10.5	1.46	9.8	1.39	9.5	1.35	9.1	1.32	8.4	1.25	7.7	1.18
	16.4	15.0	11.2	1.53	10.5	1.46	9.8	1.39	9.5	1.35	9.1	1.32	8.4	1.25	7.7	1.18

1. Capacity Ratio of Outdoor Unit (Standard-COP mode)

1-5. U-12ME1E81 (Cooling)

Capacity Ratio 30-130%

TC: Total capacity (kW), PI: Power input (kW)

Combination(%) :Indoor/outdoor capacity ratio	Outdoor air temp. ℃DB	Indoor air temp. : ℃WB													
		16.0		17.0		18.0		19.0		20.0		21.0		22.0	
		TC	PI	TC	PI	TC	PI	TC	PI	TC	PI	TC	PI	TC	PI
		kW	kW	kW	kW	kW	kW	kW	kW	kW	kW	kW	kW	kW	kW
130%	-10.0	36.0	4.65	36.0	4.65	36.0	4.65	36.0	4.65	38.4	4.95	40.8	5.27	43.2	5.57
	-5.0	36.0	4.65	36.0	4.65	36.0	4.65	36.0	4.65	38.4	4.97	40.8	5.28	43.2	5.59
	0.0	36.0	4.67	36.0	4.67	36.0	4.67	36.0	4.67	38.4	4.99	40.8	5.30	43.2	5.63
	5.0	36.0	4.71	36.0	4.71	36.0	4.71	36.0	4.71	38.4	5.04	40.8	5.36	43.2	5.69
	10.0	36.0	4.79	36.0	4.79	36.0	4.79	36.0	4.79	38.4	5.13	40.8	5.47	43.2	5.82
	15.0	36.0	4.99	36.0	4.99	36.0	4.99	36.0	4.99	38.4	5.36	40.8	5.73	43.2	6.11
	20.0	36.0	5.66	36.0	5.66	36.0	5.66	36.0	5.66	38.4	6.17	40.8	6.72	43.2	7.28
	25.0	36.0	7.05	36.0	7.05	36.0	7.05	36.0	7.05	38.4	7.68	40.8	8.34	43.2	9.04
	30.0	36.0	8.58	36.0	8.58	36.0	8.58	36.0	8.58	38.4	9.34	40.8	10.13	43.2	10.94
	35.0	36.0	10.25	36.0	10.25	36.0	10.25	36.0	10.25	38.4	11.14	40.8	12.07	41.7	12.08
	40.0	36.0	12.04	36.0	12.04	36.0	12.04	36.0	12.04	36.9	12.08	37.7	12.08	38.5	12.08
	43.0	34.3	12.08	34.3	12.08	34.3	12.08	34.3	12.08	35.1	12.08	35.9	12.08	36.7	12.08

Combination(%) :Indoor/outdoor capacity ratio	Outdoor air temp. ℃DB	Indoor air temp. : ℃WB													
		16.0		17.0		18.0		19.0		20.0		21.0		22.0	
		TC	PI	TC	PI	TC	PI	TC	PI	TC	PI	TC	PI	TC	PI
		kW	kW	kW	kW	kW	kW	kW	kW	kW	kW	kW	kW	kW	kW
120%	-10.0	33.8	4.34	35.2	4.53	35.2	4.53	35.2	4.53	37.5	4.84	39.9	5.14	42.2	5.44
	-5.0	33.8	4.35	35.2	4.54	35.2	4.54	35.2	4.54	37.5	4.85	39.9	5.16	42.2	5.46
	0.0	33.8	4.36	35.2	4.56	35.2	4.56	35.2	4.56	37.5	4.87	39.9	5.18	42.2	5.49
	5.0	33.8	4.38	35.2	4.60	35.2	4.60	35.2	4.60	37.5	4.91	39.9	5.23	42.2	5.55
	10.0	33.8	4.42	35.2	4.67	35.2	4.67	35.2	4.67	37.5	5.00	39.9	5.33	42.2	5.67
	15.0	33.8	4.53	35.2	4.86	35.2	4.86	35.2	4.86	37.5	5.22	39.9	5.58	42.2	5.95
	20.0	33.8	4.89	35.2	5.47	35.2	5.47	35.2	5.47	37.5	5.96	39.9	6.48	42.2	7.02
	25.0	33.8	6.04	35.2	6.83	35.2	6.83	35.2	6.83	37.5	7.43	39.9	8.06	42.2	8.72
	30.0	33.8	7.39	35.2	8.31	35.2	8.31	35.2	8.31	37.5	9.03	39.9	9.78	42.2	10.57
	35.0	33.8	8.88	35.2	9.92	35.2	9.92	35.2	9.92	37.5	10.78	39.9	11.67	41.4	12.08
	40.0	33.8	10.50	35.2	11.66	35.2	11.66	35.2	11.66	36.6	12.08	37.4	12.08	38.2	12.08
	43.0	33.8	11.52	34.1	12.08	34.1	12.08	34.1	12.08	34.9	12.08	35.6	12.08	36.4	12.08

Combination(%) :Indoor/outdoor capacity ratio	Outdoor air temp. ℃DB	Indoor air temp. : ℃WB													
		16.0		17.0		18.0		19.0		20.0		21.0		22.0	
		TC	PI	TC	PI	TC	PI	TC	PI	TC	PI	TC	PI	TC	PI
		kW	kW	kW	kW	kW	kW	kW	kW	kW	kW	kW	kW	kW	kW
110%	-10.0	30.2	3.88	32.7	4.21	34.3	4.42	34.3	4.42	36.6	4.72	38.9	5.02	41.2	5.31
	-5.0	30.2	3.89	32.7	4.22	34.3	4.43	34.3	4.43	36.6	4.73	38.9	5.04	41.2	5.33
	0.0	30.2	3.90	32.7	4.23	34.3	4.45	34.3	4.45	36.6	4.76	38.9	5.05	41.2	5.36
	5.0	30.2	3.92	32.7	4.25	34.3	4.49	34.3	4.49	36.6	4.79	38.9	5.10	41.2	5.42
	10.0	30.2	3.97	32.7	4.30	34.3	4.55	34.3	4.55	36.6	4.88	38.9	5.19	41.2	5.52
	15.0	30.2	4.06	32.7	4.43	34.3	4.73	34.3	4.73	36.6	5.07	38.9	5.43	41.2	5.79
	20.0	30.2	4.40	32.7	4.83	34.3	5.28	34.3	5.28	36.6	5.75	38.9	6.24	41.2	6.76
	25.0	30.2	5.43	32.7	5.99	34.3	6.61	34.3	6.61	36.6	7.18	38.9	7.78	41.2	8.41
	30.0	30.2	6.65	32.7	7.32	34.3	8.04	34.3	8.04	36.6	8.72	38.9	9.45	41.2	10.20
	35.0	30.2	7.97	32.7	8.77	34.3	9.61	34.3	9.61	36.6	10.42	38.9	11.27	41.0	12.06
	40.0	30.2	9.41	32.7	10.35	34.3	11.30	34.3	11.30	36.3	12.08	37.2	12.08	38.0	12.08
	43.0	30.2	10.32	32.7	11.35	33.9	12.08	33.9	12.08	34.6	12.08	35.4	12.08	36.2	12.08

Combination(%) :Indoor/outdoor capacity ratio	Outdoor air temp. ℃DB	Indoor air temp. : ℃WB													
		16.0		17.0		18.0		19.0		20.0		21.0		22.0	
		TC	PI	TC	PI	TC	PI	TC	PI	TC	PI	TC	PI	TC	PI
		kW	kW	kW	kW	kW	kW	kW	kW	kW	kW	kW	kW	kW	kW
100%	-10.0	26.8	3.45	29.0	3.73	31.3	4.02	33.5	4.31	35.7	4.61	38.0	4.90	40.2	5.18
	-5.0	26.8	3.46	29.0	3.74	31.3	4.03	33.5	4.32	35.7	4.62	38.0	4.91	40.2	5.20
	0.0	26.8	3.47	29.0	3.75	31.3	4.05	33.5	4.34	35.7	4.64	38.0	4.93	40.2	5.23
	5.0	26.8	3.48	29.0	3.78	31.3	4.08	33.5	4.38	35.7	4.67	38.0	4.97	40.2	5.28
	10.0	26.8	3.52	29.0	3.83	31.3	4.13	33.5	4.44	35.7	4.75	38.0	5.06	40.2	5.38
	15.0	26.8	3.61	29.0	3.94	31.3	4.26	33.5	4.60	35.7	4.93	38.0	5.28	40.2	5.62
	20.0	26.8	3.93	29.0	4.31	31.3	4.71	33.5	5.11	35.7	5.55	38.0	6.02	40.2	6.51
	25.0	26.8	4.88	29.0	5.35	31.3	5.85	33.5	6.38	35.7	6.93	38.0	7.51	40.2	8.10
	30.0	26.8	5.95	29.0	6.53	31.3	7.13	33.5	7.77	35.7	8.44	38.0	9.12	40.2	9.84
	35.0	26.8	7.12	29.0	7.81	31.3	8.54	33.5	9.29	35.7	10.07	38.0	10.89	40.2	11.73
	40.0	26.8	8.38	29.0	9.20	31.3	10.05	33.5	10.93	35.7	11.84	36.9	12.08	37.7	12.08
	43.0	26.8	9.19	29.0	10.08	31.3	11.01	33.5	11.97	34.4	12.08	35.1	12.08	35.9	12.08

1. Capacity Ratio of Outdoor Unit (Standard-COP mode)

U-12ME1E81 (Cooling) **Capacity Ratio 30-130%**

TC: Total capacity (kW), PI: Power input (kW)

Combination(%) :Indoor/outdoor capacity ratio	Outdoor air temp. ℃DB	Indoor air temp. :℃WB													
		16.0		17.0		18.0		19.0		20.0		21.0		22.0	
		TC	PI	TC	PI	TC	PI	TC	PI	TC	PI	TC	PI	TC	PI
		kW	kW	kW	kW	kW	kW	kW	kW	kW	kW	kW	kW	kW	kW
90%	-10.0	24.1	3.10	26.1	3.36	28.1	3.62	30.2	3.88	32.2	4.14	34.2	4.40	36.2	4.66
	-5.0	24.1	3.10	26.1	3.36	28.1	3.62	30.2	3.89	32.2	4.15	34.2	4.41	36.2	4.67
	0.0	24.1	3.11	26.1	3.37	28.1	3.64	30.2	3.90	32.2	4.16	34.2	4.43	36.2	4.69
	5.0	24.1	3.13	26.1	3.39	28.1	3.66	30.2	3.92	32.2	4.19	34.2	4.46	36.2	4.73
	10.0	24.1	3.16	26.1	3.43	28.1	3.70	30.2	3.98	32.2	4.25	34.2	4.52	36.2	4.80
	15.0	24.1	3.22	26.1	3.51	28.1	3.80	30.2	4.10	32.2	4.38	34.2	4.68	36.2	4.99
	20.0	24.1	3.46	26.1	3.79	28.1	4.12	30.2	4.47	32.2	4.82	34.2	5.18	36.2	5.56
	25.0	24.1	4.30	26.1	4.69	28.1	5.11	30.2	5.55	32.2	5.99	34.2	6.47	36.2	6.96
	30.0	24.1	5.24	26.1	5.73	28.1	6.23	30.2	6.76	32.2	7.31	34.2	7.88	36.2	8.47
	35.0	24.1	6.27	26.1	6.86	28.1	7.46	30.2	8.09	32.2	8.74	34.2	9.42	36.2	10.13
	40.0	24.1	7.39	26.1	8.08	28.1	8.80	30.2	9.54	32.2	10.30	34.2	11.09	36.2	11.90
	43.0	24.1	8.10	26.1	8.86	28.1	9.64	30.2	10.45	32.2	11.29	34.1	12.08	34.8	12.08

Combination(%) :Indoor/outdoor capacity ratio	Outdoor air temp. ℃DB	Indoor air temp. :℃WB													
		16.0		17.0		18.0		19.0		20.0		21.0		22.0	
		TC	PI	TC	PI	TC	PI	TC	PI	TC	PI	TC	PI	TC	PI
		kW	kW	kW	kW	kW	kW	kW	kW	kW	kW	kW	kW	kW	kW
80%	-10.0	21.4	2.76	23.2	2.99	25.0	3.21	26.8	3.45	28.6	3.68	30.4	3.91	32.2	4.14
	-5.0	21.4	2.76	23.2	2.99	25.0	3.22	26.8	3.46	28.6	3.69	30.4	3.92	32.2	4.15
	0.0	21.4	2.77	23.2	3.00	25.0	3.23	26.8	3.47	28.6	3.70	30.4	3.93	32.2	4.16
	5.0	21.4	2.78	23.2	3.01	25.0	3.24	26.8	3.47	28.6	3.72	30.4	3.95	32.2	4.19
	10.0	21.4	2.80	23.2	3.04	25.0	3.27	26.8	3.51	28.6	3.75	30.4	3.99	32.2	4.25
	15.0	21.4	2.84	23.2	3.09	25.0	3.34	26.8	3.60	28.6	3.86	30.4	4.12	32.2	4.38
	20.0	21.4	3.01	23.2	3.30	25.0	3.58	26.8	3.87	28.6	4.17	30.4	4.47	32.2	4.78
	25.0	21.4	3.76	23.2	4.09	25.0	4.42	26.8	4.78	28.6	5.14	30.4	5.52	32.2	5.91
	30.0	21.4	4.59	23.2	4.99	25.0	5.40	26.8	5.83	28.6	6.28	30.4	6.74	32.2	7.22
	35.0	21.4	5.48	23.2	5.96	25.0	6.47	26.8	6.99	28.6	7.52	30.4	8.07	32.2	8.64
	40.0	21.4	6.46	23.2	7.03	25.0	7.63	26.8	8.24	28.6	8.86	30.4	9.51	32.2	10.18
	43.0	21.4	7.08	23.2	7.71	25.0	8.36	26.8	9.03	28.6	9.72	30.4	10.43	32.2	11.16

Combination(%) :Indoor/outdoor capacity ratio	Outdoor air temp. ℃DB	Indoor air temp. :℃WB													
		16.0		17.0		18.0		19.0		20.0		21.0		22.0	
		TC	PI	TC	PI	TC	PI	TC	PI	TC	PI	TC	PI	TC	PI
		kW	kW	kW	kW	kW	kW	kW	kW	kW	kW	kW	kW	kW	kW
70%	-10.0	18.8	2.42	20.3	2.61	21.9	2.81	23.5	3.02	25.0	3.21	26.6	3.42	28.1	3.62
	-5.0	18.8	2.42	20.3	2.62	21.9	2.81	23.5	3.02	25.0	3.22	26.6	3.43	28.1	3.62
	0.0	18.8	2.42	20.3	2.62	21.9	2.82	23.5	3.03	25.0	3.23	26.6	3.43	28.1	3.63
	5.0	18.8	2.42	20.3	2.63	21.9	2.83	23.5	3.04	25.0	3.24	26.6	3.45	28.1	3.65
	10.0	18.8	2.43	20.3	2.65	21.9	2.85	23.5	3.07	25.0	3.27	26.6	3.48	28.1	3.69
	15.0	18.8	2.47	20.3	2.68	21.9	2.90	23.5	3.12	25.0	3.34	26.6	3.56	28.1	3.78
	20.0	18.8	2.58	20.3	2.82	21.9	3.07	23.5	3.31	25.0	3.56	26.6	3.80	28.1	4.06
	25.0	18.8	3.23	20.3	3.53	21.9	3.80	23.5	4.08	25.0	4.37	26.6	4.65	28.1	4.97
	30.0	18.8	3.98	20.3	4.30	21.9	4.64	23.5	4.98	25.0	5.33	26.6	5.69	28.1	6.08
	35.0	18.8	4.74	20.3	5.14	21.9	5.54	23.5	5.95	25.0	6.38	26.6	6.83	28.1	7.28
	40.0	18.8	5.57	20.3	6.05	21.9	6.53	23.5	7.02	25.0	7.53	26.6	8.05	28.1	8.59
	43.0	18.8	6.11	20.3	6.63	21.9	7.16	23.5	7.71	25.0	8.27	26.6	8.83	28.1	9.42

Combination(%) :Indoor/outdoor capacity ratio	Outdoor air temp. ℃DB	Indoor air temp. :℃WB													
		16.0		17.0		18.0		19.0		20.0		21.0		22.0	
		TC	PI	TC	PI	TC	PI	TC	PI	TC	PI	TC	PI	TC	PI
		kW	kW	kW	kW	kW	kW	kW	kW	kW	kW	kW	kW	kW	kW
60%	-10.0	16.1	2.06	17.4	2.24	18.8	2.42	20.1	2.58	21.4	2.76	22.8	2.93	24.1	3.10
	-5.0	16.1	2.07	17.4	2.24	18.8	2.42	20.1	2.58	21.4	2.76	22.8	2.94	24.1	3.10
	0.0	16.1	2.07	17.4	2.25	18.8	2.42	20.1	2.59	21.4	2.77	22.8	2.94	24.1	3.11
	5.0	16.1	2.07	17.4	2.25	18.8	2.42	20.1	2.60	21.4	2.78	22.8	2.94	24.1	3.12
	10.0	16.1	2.08	17.4	2.26	18.8	2.43	20.1	2.61	21.4	2.79	22.8	2.97	24.1	3.15
	15.0	16.1	2.11	17.4	2.29	18.8	2.47	20.1	2.65	21.4	2.83	22.8	3.02	24.1	3.21
	20.0	16.1	2.18	17.4	2.38	18.8	2.57	20.1	2.78	21.4	2.97	22.8	3.18	24.1	3.38
	25.0	16.1	2.59	17.4	2.86	18.8	3.13	20.1	3.40	21.4	3.66	22.8	3.88	24.1	4.12
	30.0	16.1	3.41	17.4	3.66	18.8	3.92	20.1	4.19	21.4	4.47	22.8	4.75	24.1	5.04
	35.0	16.1	4.05	17.4	4.37	18.8	4.68	20.1	5.01	21.4	5.35	22.8	5.69	24.1	6.04
	40.0	16.1	4.76	17.4	5.13	18.8	5.51	20.1	5.91	21.4	6.31	22.8	6.72	24.1	7.13
	43.0	16.1	5.20	17.4	5.62	18.8	6.04	20.1	6.48	21.4	6.92	22.8	7.37	24.1	7.83

1. Capacity Ratio of Outdoor Unit (Standard-COP mode)

U-12ME1E81 (Cooling) **Capacity Ratio 30-130%**

TC: Total capacity (kW), PI: Power input (kW)

Combination(%) :Indoor/outdoor capacity ratio	Outdoor air temp. ℃DB	Indoor air temp. :℃WB													
		16.0		17.0		18.0		19.0		20.0		21.0		22.0	
		TC	PI	TC	PI	TC	PI	TC	PI	TC	PI	TC	PI	TC	PI
		kW	kW	kW	kW	kW	kW	kW	kW	kW	kW	kW	kW	kW	kW
50%	-10.0	13.4	1.72	14.5	1.87	15.6	2.01	16.8	2.16	17.9	2.29	19.0	2.44	20.1	2.58
	-5.0	13.4	1.72	14.5	1.87	15.6	2.01	16.8	2.16	17.9	2.29	19.0	2.44	20.1	2.58
	0.0	13.4	1.73	14.5	1.87	15.6	2.02	16.8	2.16	17.9	2.30	19.0	2.44	20.1	2.59
	5.0	13.4	1.73	14.5	1.88	15.6	2.02	16.8	2.16	17.9	2.30	19.0	2.45	20.1	2.60
	10.0	13.4	1.74	14.5	1.88	15.6	2.03	16.8	2.17	17.9	2.32	19.0	2.46	20.1	2.61
	15.0	13.4	1.75	14.5	1.90	15.6	2.04	16.8	2.19	17.9	2.34	19.0	2.50	20.1	2.65
	20.0	13.4	1.79	14.5	1.95	15.6	2.11	16.8	2.27	17.9	2.42	19.0	2.59	20.1	2.75
	25.0	13.4	2.03	14.5	2.24	15.6	2.43	16.8	2.64	17.9	2.85	19.0	3.06	20.1	3.27
	30.0	13.4	2.89	14.5	3.08	15.6	3.28	16.8	3.48	17.9	3.69	19.0	3.90	20.1	4.12
	35.0	13.4	3.41	14.5	3.65	15.6	3.89	16.8	4.14	17.9	4.40	19.0	4.65	20.1	4.92
	40.0	13.4	3.99	14.5	4.27	15.6	4.57	16.8	4.87	17.9	5.17	19.0	5.49	20.1	5.81
	43.0	13.4	4.35	14.5	4.67	15.6	5.00	16.8	5.33	17.9	5.68	19.0	6.02	20.1	6.36

Combination(%) :Indoor/outdoor capacity ratio	Outdoor air temp. ℃DB	Indoor air temp. :℃WB													
		16.0		17.0		18.0		19.0		20.0		21.0		22.0	
		TC	PI	TC	PI	TC	PI	TC	PI	TC	PI	TC	PI	TC	PI
		kW	kW	kW	kW	kW	kW	kW	kW	kW	kW	kW	kW	kW	kW
40%	-10.0	10.7	1.37	11.6	1.50	12.5	1.61	13.4	1.72	14.3	1.84	15.2	1.95	16.1	2.06
	-5.0	10.7	1.37	11.6	1.50	12.5	1.61	13.4	1.72	14.3	1.84	15.2	1.95	16.1	2.07
	0.0	10.7	1.37	11.6	1.50	12.5	1.61	13.4	1.73	14.3	1.84	15.2	1.95	16.1	2.07
	5.0	10.7	1.38	11.6	1.50	12.5	1.62	13.4	1.73	14.3	1.84	15.2	1.96	16.1	2.07
	10.0	10.7	1.38	11.6	1.50	12.5	1.62	13.4	1.74	14.3	1.85	15.2	1.97	16.1	2.08
	15.0	10.7	1.39	11.6	1.51	12.5	1.63	13.4	1.75	14.3	1.87	15.2	1.98	16.1	2.10
	20.0	10.7	1.41	11.6	1.54	12.5	1.66	13.4	1.78	14.3	1.90	15.2	2.03	16.1	2.16
	25.0	10.7	1.55	11.6	1.69	12.5	1.84	13.4	1.99	14.3	2.13	15.2	2.28	16.1	2.43
	30.0	10.7	2.42	11.6	2.55	12.5	2.69	13.4	2.83	14.3	2.98	15.2	3.13	16.1	3.29
	35.0	10.7	2.82	11.6	3.00	12.5	3.18	13.4	3.35	14.3	3.54	15.2	3.73	16.1	3.91
	40.0	10.7	3.27	11.6	3.48	12.5	3.70	13.4	3.92	14.3	4.14	15.2	4.37	16.1	4.60
	43.0	10.7	3.56	11.6	3.79	12.5	4.04	13.4	4.28	14.3	4.52	15.2	4.78	16.1	5.04

Combination(%) :Indoor/outdoor capacity ratio	Outdoor air temp. ℃DB	Indoor air temp. :℃WB													
		16.0		17.0		18.0		19.0		20.0		21.0		22.0	
		TC	PI	TC	PI	TC	PI	TC	PI	TC	PI	TC	PI	TC	PI
		kW	kW	kW	kW	kW	kW	kW	kW	kW	kW	kW	kW	kW	kW
30%	-10.0	8.0	1.03	8.7	1.11	9.4	1.21	10.1	1.29	10.7	1.37	11.4	1.47	12.1	1.55
	-5.0	8.0	1.03	8.7	1.12	9.4	1.21	10.1	1.29	10.7	1.37	11.4	1.47	12.1	1.55
	0.0	8.0	1.03	8.7	1.12	9.4	1.21	10.1	1.29	10.7	1.37	11.4	1.47	12.1	1.55
	5.0	8.0	1.03	8.7	1.12	9.4	1.21	10.1	1.29	10.7	1.38	11.4	1.47	12.1	1.55
	10.0	8.0	1.04	8.7	1.12	9.4	1.21	10.1	1.30	10.7	1.38	11.4	1.47	12.1	1.56
	15.0	8.0	1.04	8.7	1.12	9.4	1.22	10.1	1.30	10.7	1.39	11.4	1.48	12.1	1.57
	20.0	8.0	1.05	8.7	1.14	9.4	1.23	10.1	1.32	10.7	1.41	11.4	1.50	12.1	1.59
	25.0	8.0	1.11	8.7	1.21	9.4	1.31	10.1	1.41	10.7	1.51	11.4	1.61	12.1	1.71
	30.0	8.0	1.98	8.7	2.07	9.4	2.16	10.1	2.26	10.7	2.36	11.4	2.45	12.1	2.55
	35.0	8.0	2.28	8.7	2.40	9.4	2.52	10.1	2.64	10.7	2.76	11.4	2.89	12.1	3.01
	40.0	8.0	2.60	8.7	2.75	9.4	2.90	10.1	3.05	10.7	3.21	11.4	3.35	12.1	3.50
	43.0	8.0	2.81	8.7	2.98	9.4	3.15	10.1	3.32	10.7	3.48	11.4	3.65	12.1	3.83

1. Capacity Ratio of Outdoor Unit (Standard-COP mode)

1-6. U-12ME1E81 (Heating)

Capacity Ratio 30-130%

TC: Total capacity (kW), PI: Power input (kW)

Combination(%) :Indoor/outdoor capacity ratio	Outdoor air temp.		Indoor air temp. : ℃CDB													
			15.0		17.0		19.0		20.0		21.0		23.0		25.0	
			TC	PI	TC	PI	TC	PI	TC	PI	TC	PI	TC	PI	TC	PI
	℃CDB	℃CWB	kW	kW	kW	kW	kW	kW	kW	kW	kW	kW	kW	kW	kW	kW
130%	-24.9	-25.0	28.2	10.64	26.8	10.02	25.2	9.41	24.5	9.10	24.5	9.10	24.5	9.10	24.5	9.10
	-19.8	-20.0	29.7	10.75	28.2	10.14	26.6	9.53	25.8	9.21	25.8	9.21	25.8	9.21	25.8	9.21
	-14.7	-15.0	31.5	10.93	30.0	10.31	28.4	9.70	27.5	9.40	27.5	9.40	27.5	9.40	27.5	9.40
	-9.6	-10.0	33.8	11.20	32.2	10.59	30.5	9.97	29.6	9.66	29.6	9.66	29.6	9.66	29.6	9.66
	-4.4	-5.0	36.9	11.60	35.2	10.99	33.4	10.36	32.5	10.05	32.5	10.05	32.5	10.05	32.5	10.05
	-1.8	-2.5	38.9	11.88	37.1	11.25	35.3	10.62	34.4	10.29	34.4	10.29	34.4	10.29	34.4	10.29
	0.8	0.0	40.7	11.90	39.4	11.57	37.5	10.92	36.5	10.60	36.5	10.60	36.5	10.60	36.5	10.60
	2.8	2.0	42.3	11.90	41.6	11.85	39.6	11.21	38.6	10.88	38.6	10.88	38.6	10.88	38.6	10.88
	6.0	5.0	45.1	11.90	44.3	11.90	41.8	11.14	40.3	10.67	40.3	10.67	40.3	10.67	40.3	10.67
	7.0	6.0	46.0	11.90	44.8	11.73	41.8	10.82	40.3	10.38	40.3	10.38	40.3	10.38	40.3	10.38
	8.6	7.5	47.3	11.90	44.8	11.17	41.8	10.26	40.3	9.82	40.3	9.82	40.3	9.82	40.3	9.82
	11.2	10.0	47.8	10.97	44.8	10.12	41.8	9.31	40.3	8.91	40.3	8.91	40.3	8.91	40.3	8.91
	16.4	15.0	47.8	8.88	44.8	8.21	41.8	7.58	40.3	7.27	40.3	7.27	40.3	7.27	40.3	7.27

Combination(%) :Indoor/outdoor capacity ratio	Outdoor air temp.		Indoor air temp. : ℃CDB													
			15.0		17.0		19.0		20.0		21.0		23.0		25.0	
			TC	PI	TC	PI	TC	PI	TC	PI	TC	PI	TC	PI	TC	PI
	℃CDB	℃CWB	kW	kW	kW	kW	kW	kW	kW	kW	kW	kW	kW	kW	kW	kW
120%	-24.9	-25.0	28.3	10.51	26.8	9.91	25.3	9.31	24.5	9.00	24.5	9.00	24.5	9.00	24.5	9.00
	-19.8	-20.0	29.8	10.63	28.2	10.03	26.7	9.43	25.9	9.13	25.9	9.13	25.9	9.13	25.9	9.13
	-14.7	-15.0	31.6	10.82	30.0	10.22	28.4	9.62	27.5	9.31	27.5	9.31	27.5	9.31	27.5	9.31
	-9.6	-10.0	33.9	11.09	32.3	10.49	30.5	9.88	29.7	9.58	29.7	9.58	29.7	9.58	29.7	9.58
	-4.4	-5.0	37.0	11.50	35.3	10.89	33.5	10.28	32.5	9.96	32.5	9.96	32.5	9.96	32.5	9.96
	-1.8	-2.5	39.0	11.78	37.2	11.15	35.3	10.53	34.4	10.21	34.4	10.21	34.4	10.21	34.4	10.21
	0.8	0.0	40.9	11.90	39.4	11.46	37.5	10.82	36.5	10.50	36.5	10.50	36.5	10.50	36.5	10.50
	2.8	2.0	42.5	11.90	41.6	11.75	39.6	11.11	38.6	10.79	38.6	10.79	38.6	10.79	38.5	10.34
	6.0	5.0	45.2	11.90	43.8	11.62	40.8	10.71	39.4	10.28	39.4	10.28	39.4	10.28	38.5	9.58
	7.0	6.0	46.0	11.90	43.8	11.28	40.8	10.40	39.4	9.96	39.4	9.96	39.4	9.96	38.5	9.25
	8.6	7.5	46.7	11.58	43.8	10.69	40.8	9.83	39.4	9.42	39.4	9.42	39.4	9.42	38.5	8.76
	11.2	10.0	46.7	10.48	43.8	9.68	40.8	8.91	39.4	8.55	39.4	8.55	39.4	8.55	38.5	7.96
	16.4	15.0	46.7	8.46	43.8	7.84	40.8	7.25	39.4	6.96	39.4	6.96	39.4	6.96	38.5	6.52

Combination(%) :Indoor/outdoor capacity ratio	Outdoor air temp.		Indoor air temp. : ℃CDB													
			15.0		17.0		19.0		20.0		21.0		23.0		25.0	
			TC	PI	TC	PI	TC	PI	TC	PI	TC	PI	TC	PI	TC	PI
	℃CDB	℃CWB	kW	kW	kW	kW	kW	kW	kW	kW	kW	kW	kW	kW	kW	kW
110%	-24.9	-25.0	28.4	10.38	26.9	9.80	25.3	9.20	24.6	8.92	24.6	8.92	24.4	8.74	22.6	8.12
	-19.8	-20.0	29.9	10.51	28.3	9.93	26.7	9.34	25.9	9.05	25.9	9.05	25.8	8.88	23.9	8.24
	-14.7	-15.0	31.7	10.71	30.0	10.12	28.4	9.53	27.6	9.23	27.6	9.23	27.5	9.07	25.5	8.43
	-9.6	-10.0	34.0	10.99	32.3	10.39	30.6	9.80	29.7	9.50	29.7	9.50	29.7	9.34	27.6	8.68
	-4.4	-5.0	37.1	11.40	35.3	10.80	33.5	10.19	32.6	9.88	32.6	9.88	32.6	9.88	30.4	9.05
	-1.8	-2.5	39.0	11.68	37.2	11.06	35.3	10.44	34.4	10.12	34.4	10.12	34.4	10.12	32.2	9.28
	0.8	0.0	41.1	11.90	39.5	11.36	37.5	10.73	36.5	10.41	36.5	10.41	36.5	10.41	34.3	9.57
	2.8	2.0	42.7	11.90	41.6	11.65	39.6	11.02	38.4	10.67	38.4	10.67	37.6	10.16	34.5	9.24
	6.0	5.0	45.2	11.90	42.7	11.15	39.9	10.31	38.4	9.89	38.4	9.89	37.6	9.41	34.5	8.55
	7.0	6.0	45.6	11.68	42.7	10.82	39.9	9.97	38.4	9.55	38.4	9.55	37.6	9.09	34.5	8.25
	8.6	7.5	45.6	11.06	42.7	10.22	39.9	9.42	38.4	9.03	38.4	9.03	37.6	8.59	34.5	7.81
	11.2	10.0	45.6	9.99	42.7	9.25	39.9	8.54	38.4	8.19	38.4	8.19	37.6	7.80	34.5	7.11
	16.4	15.0	45.6	8.05	42.7	7.48	39.9	6.94	38.4	6.66	38.4	6.66	37.6	6.38	34.5	5.84

Combination(%) :Indoor/outdoor capacity ratio	Outdoor air temp.		Indoor air temp. : ℃CDB													
			15.0		17.0		19.0		20.0		21.0		23.0		25.0	
			TC	PI	TC	PI	TC	PI	TC	PI	TC	PI	TC	PI	TC	PI
	℃CDB	℃CWB	kW	kW	kW	kW	kW	kW	kW	kW	kW	kW	kW	kW	kW	kW
100%	-24.9	-25.0	28.4	10.26	26.9	9.69	25.4	9.12	24.6	8.83	23.8	8.55	22.2	7.98	20.6	7.42
	-19.8	-20.0	29.9	10.39	28.4	9.83	26.7	9.25	26.0	8.97	25.1	8.67	23.5	8.11	21.8	7.54
	-14.7	-15.0	31.7	10.60	30.1	10.02	28.5	9.44	27.6	9.15	26.7	8.87	25.0	8.28	23.2	7.70
	-9.6	-10.0	34.1	10.89	32.4	10.30	30.6	9.72	29.7	9.42	28.8	9.12	27.0	8.53	25.1	7.94
	-4.4	-5.0	37.1	11.31	35.3	10.71	33.5	10.10	32.6	9.80	31.6	9.50	29.6	8.88	27.6	8.26
	-1.8	-2.5	39.1	11.57	37.2	10.96	35.3	10.35	34.4	10.04	33.3	9.73	31.3	9.10	29.2	8.46
	0.8	0.0	41.4	11.88	39.5	11.26	37.5	10.64	36.5	10.32	35.4	10.00	33.3	9.37	30.6	8.55
	2.8	2.0	42.9	11.90	41.6	11.55	38.9	10.68	37.5	10.25	36.1	9.83	33.3	9.00	30.6	8.22
	6.0	5.0	44.4	11.54	41.7	10.71	38.9	9.89	37.5	9.49	36.1	9.10	33.3	8.32	30.6	7.58
	7.0	6.0	44.4	11.19	41.7	10.35	38.9	9.55	37.5	9.15	36.1	8.77	33.3	8.03	30.6	7.32
	8.6	7.5	44.4	10.55	41.7	9.76	38.9	9.01	37.5	8.65	36.1	8.29	33.3	7.60	30.6	6.94
	11.2	10.0	44.4	9.53	41.7	8.83	38.9	8.16	37.5	7.84	36.1	7.52	33.3	6.91	30.6	6.31
	16.4	15.0	44.4	7.67	41.7	7.14	38.9	6.62	37.5	6.38	36.1	6.13	33.3	5.66	30.6	5.21

1. Capacity Ratio of Outdoor Unit (Standard-COP mode)

U-12ME1E81 (Heating)

Capacity Ratio 30-130%

TC: Total capacity (kW), PI: Power input (kW)

Combination(%) :Indoor/outdoor capacity ratio	Outdoor air temp.		Indoor air temp. : ℃CDB													
			15.0		17.0		19.0		20.0		21.0		23.0		25.0	
			TC	PI	TC	PI	TC	PI	TC	PI	TC	PI	TC	PI	TC	PI
	℃CDB	℃CWB	kW	kW	kW	kW	kW	kW	kW	kW	kW	kW	kW	kW	kW	kW
90%	-24.9	-25.0	28.7	9.82	27.1	9.31	25.5	8.78	24.7	8.52	23.9	8.26	22.3	7.75	20.6	7.25
	-19.8	-20.0	30.2	9.98	28.5	9.46	26.9	8.93	26.1	8.67	25.2	8.41	23.6	7.89	21.8	7.37
	-14.7	-15.0	32.0	10.21	30.3	9.67	28.6	9.14	27.8	8.87	26.9	8.60	25.1	8.06	23.3	7.53
	-9.6	-10.0	34.3	10.51	32.6	9.97	30.8	9.42	29.9	9.14	28.9	8.86	27.0	8.30	25.1	7.75
	-4.4	-5.0	37.4	10.93	35.5	10.37	33.6	9.79	32.6	9.50	31.6	9.20	29.6	8.63	27.5	8.04
	-1.8	-2.5	39.3	11.19	37.4	10.61	35.0	9.89	33.8	9.51	32.5	9.14	30.0	8.42	27.5	7.72
	0.8	0.0	40.0	10.91	37.5	10.16	35.0	9.43	33.8	9.09	32.5	8.74	30.0	8.06	27.5	7.41
	2.8	2.0	40.0	10.44	37.5	9.74	35.0	9.05	33.8	8.71	32.5	8.37	30.0	7.71	27.5	7.07
	6.0	5.0	40.0	9.54	37.5	8.89	35.0	8.26	33.8	7.95	32.5	7.65	30.0	7.06	27.5	6.49
	7.0	6.0	40.0	9.20	37.5	8.57	35.0	7.97	33.8	7.68	32.5	7.38	30.0	6.82	27.5	6.27
	8.6	7.5	40.0	8.66	37.5	8.08	35.0	7.51	33.8	7.24	32.5	6.97	30.0	6.44	27.5	5.93
	11.2	10.0	40.0	7.79	37.5	7.27	35.0	6.79	33.8	6.55	32.5	6.31	30.0	5.85	27.5	5.40
	16.4	15.0	40.0	6.22	37.5	5.86	35.0	5.49	33.8	5.31	32.5	5.13	30.0	4.79	27.5	4.45

Combination(%) :Indoor/outdoor capacity ratio	Outdoor air temp.		Indoor air temp. : ℃CDB													
			15.0		17.0		19.0		20.0		21.0		23.0		25.0	
			TC	PI	TC	PI	TC	PI	TC	PI	TC	PI	TC	PI	TC	PI
	℃CDB	℃CWB	kW	kW	kW	kW	kW	kW	kW	kW	kW	kW	kW	kW	kW	kW
80%	-24.9	-25.0	29.0	9.48	27.4	9.01	25.8	8.54	24.9	8.30	24.1	8.07	22.4	7.60	20.7	7.15
	-19.8	-20.0	30.5	9.66	28.8	9.19	27.2	8.70	26.3	8.45	25.5	8.22	23.7	7.74	21.9	7.27
	-14.7	-15.0	32.4	9.91	30.6	9.42	28.9	8.91	28.0	8.67	27.1	8.42	25.2	7.91	23.4	7.42
	-9.6	-10.0	34.7	10.23	32.9	9.72	31.0	9.20	30.0	8.90	28.9	8.59	26.7	7.97	24.5	7.37
	-4.4	-5.0	35.6	9.84	33.3	9.21	31.1	8.61	30.0	8.32	28.9	8.02	26.7	7.46	24.5	6.90
	-1.8	-2.5	35.6	9.44	33.3	8.86	31.1	8.29	30.0	8.01	28.9	7.73	26.7	7.18	24.5	6.65
	0.8	0.0	35.6	8.99	33.3	8.42	31.1	7.87	30.0	7.60	28.9	7.34	26.7	6.82	24.5	6.31
	2.8	2.0	35.6	8.52	33.3	8.00	31.1	7.48	30.0	7.23	28.9	6.98	26.7	6.50	24.5	6.02
	6.0	5.0	35.6	7.74	33.3	7.27	31.1	6.82	30.0	6.60	28.9	6.37	26.7	5.93	24.5	5.50
	7.0	6.0	35.6	7.45	33.3	7.00	31.1	6.57	30.0	6.35	28.9	6.14	26.7	5.72	24.5	5.31
	8.6	7.5	35.6	6.99	33.3	6.58	31.1	6.19	30.0	5.98	28.9	5.79	26.7	5.41	24.5	5.02
	11.2	10.0	35.6	6.27	33.3	5.92	31.1	5.57	30.0	5.41	28.9	5.23	26.7	4.90	24.5	4.58
	16.4	15.0	35.6	4.98	33.3	4.74	31.1	4.49	30.0	4.37	28.9	4.25	26.7	4.01	24.5	3.77

Combination(%) :Indoor/outdoor capacity ratio	Outdoor air temp.		Indoor air temp. : ℃CDB													
			15.0		17.0		19.0		20.0		21.0		23.0		25.0	
			TC	PI	TC	PI	TC	PI	TC	PI	TC	PI	TC	PI	TC	PI
	℃CDB	℃CWB	kW	kW	kW	kW	kW	kW	kW	kW	kW	kW	kW	kW	kW	kW
70%	-24.9	-25.0	29.5	9.30	27.9	8.87	26.2	8.44	25.4	8.23	24.5	8.01	22.8	7.59	21.0	7.18
	-19.8	-20.0	31.1	9.51	29.2	8.98	27.2	8.45	26.3	8.19	25.3	7.94	23.3	7.45	21.4	6.98
	-14.7	-15.0	31.1	9.04	29.2	8.54	27.2	8.04	26.3	7.80	25.3	7.56	23.3	7.09	21.4	6.63
	-9.6	-10.0	31.1	8.56	29.2	8.09	27.2	7.62	26.3	7.39	25.3	7.16	23.3	6.73	21.4	6.29
	-4.4	-5.0	31.1	8.00	29.2	7.56	27.2	7.13	26.3	6.92	25.3	6.71	23.3	6.30	21.4	5.89
	-1.8	-2.5	31.1	7.62	29.2	7.20	27.2	6.80	26.3	6.60	25.3	6.41	23.3	6.01	21.4	5.63
	0.8	0.0	31.1	7.19	29.2	6.81	27.2	6.43	26.3	6.25	25.3	6.06	23.3	5.70	21.4	5.33
	2.8	2.0	31.1	6.82	29.2	6.46	27.2	6.11	26.3	5.94	25.3	5.76	23.3	5.42	21.4	5.08
	6.0	5.0	31.1	6.17	29.2	5.86	27.2	5.54	26.3	5.39	25.3	5.24	23.3	4.93	21.4	4.62
	7.0	6.0	31.1	5.92	29.2	5.63	27.2	5.33	26.3	5.19	25.3	5.04	23.3	4.75	21.4	4.46
	8.6	7.5	31.1	5.55	29.2	5.29	27.2	5.02	26.3	4.89	25.3	4.76	23.3	4.48	21.4	4.22
	11.2	10.0	31.1	4.97	29.2	4.75	27.2	4.52	26.3	4.41	25.3	4.30	23.3	4.07	21.4	3.84
	16.4	15.0	31.1	4.14	29.2	3.95	27.2	3.76	26.3	3.66	25.3	3.57	23.3	3.38	21.4	3.18

Combination(%) :Indoor/outdoor capacity ratio	Outdoor air temp.		Indoor air temp. : ℃CDB													
			15.0		17.0		19.0		20.0		21.0		23.0		25.0	
			TC	PI	TC	PI	TC	PI	TC	PI	TC	PI	TC	PI	TC	PI
	℃CDB	℃CWB	kW	kW	kW	kW	kW	kW	kW	kW	kW	kW	kW	kW	kW	kW
60%	-24.9	-25.0	26.7	7.91	25.0	7.55	23.3	7.19	22.5	7.02	21.7	6.84	20.0	6.50	18.3	6.17
	-19.8	-20.0	26.7	7.60	25.0	7.25	23.3	6.90	22.5	6.73	21.7	6.56	20.0	6.22	18.3	5.90
	-14.7	-15.0	26.7	7.28	25.0	6.94	23.3	6.61	22.5	6.44	21.7	6.28	20.0	5.95	18.3	5.63
	-9.6	-10.0	26.7	6.87	25.0	6.56	23.3	6.26	22.5	6.11	21.7	5.96	20.0	5.66	18.3	5.35
	-4.4	-5.0	26.7	6.33	25.0	6.06	23.3	5.78	22.5	5.65	21.7	5.51	20.0	5.23	18.3	4.97
	-1.8	-2.5	26.7	6.02	25.0	5.76	23.3	5.51	22.5	5.38	21.7	5.25	20.0	4.99	18.3	4.73
	0.8	0.0	26.7	5.67	25.0	5.44	23.3	5.20	22.5	5.08	21.7	4.96	20.0	4.72	18.3	4.47
	2.8	2.0	26.7	5.36	25.0	5.14	23.3	4.92	22.5	4.81	21.7	4.70	20.0	4.47	18.3	4.25
	6.0	5.0	26.7	4.83	25.0	4.65	23.3	4.46	22.5	4.36	21.7	4.25	20.0	4.04	18.3	3.83
	7.0	6.0	26.7	4.64	25.0	4.46	23.3	4.28	22.5	4.18	21.7	4.09	20.0	3.90	18.3	3.70
	8.6	7.5	26.7	4.34	25.0	4.19	23.3	4.03	22.5	3.94	21.7	3.86	20.0	3.69	18.3	3.50
	11.2	10.0	26.7	3.87	25.0	3.75	23.3	3.62	22.5	3.56	21.7	3.49	20.0	3.35	18.3	3.20
	16.4	15.0	26.7	3.71	25.0	3.54	23.3	3.38	22.5	3.29	21.7	3.21	20.0	3.05	18.3	2.88

1. Capacity Ratio of Outdoor Unit (Standard-COP mode)

U-12ME1E81 (Heating)

Capacity Ratio 30-130%

TC: Total capacity (kW), PI: Power input (kW)

Combination(%) :Indoor/outdoor capacity ratio	Outdoor air temp.		Indoor air temp. : °CDB													
			15.0		17.0		19.0		20.0		21.0		23.0		25.0	
			TC	PI	TC	PI	TC	PI	TC	PI	TC	PI	TC	PI	TC	PI
	°CDB	°CWB	kW	kW	kW	kW	kW	kW	kW	kW	kW	kW	kW	kW	kW	kW
50%	-24.9	-25.0	22.2	6.31	20.9	6.08	19.5	5.86	18.8	5.75	18.0	5.64	16.7	5.41	15.3	5.19
	-19.8	-20.0	22.2	6.07	20.9	5.87	19.5	5.65	18.8	5.54	18.0	5.42	16.7	5.20	15.3	4.97
	-14.7	-15.0	22.2	5.76	20.9	5.57	19.5	5.39	18.8	5.29	18.0	5.20	16.7	4.98	15.3	4.75
	-9.6	-10.0	22.2	5.40	20.9	5.22	19.5	5.05	18.8	4.97	18.0	4.88	16.7	4.69	15.3	4.50
	-4.4	-5.0	22.2	4.95	20.9	4.80	19.5	4.65	18.8	4.58	18.0	4.49	16.7	4.33	15.3	4.15
	-1.8	-2.5	22.2	4.69	20.9	4.56	19.5	4.42	18.8	4.35	18.0	4.27	16.7	4.12	15.3	3.95
	0.8	0.0	22.2	4.41	20.9	4.28	19.5	4.15	18.8	4.09	18.0	4.02	16.7	3.88	15.3	3.71
	2.8	2.0	22.2	4.15	20.9	4.04	19.5	3.93	18.8	3.86	18.0	3.80	16.7	3.64	15.3	3.48
	6.0	5.0	22.2	3.72	20.9	3.62	19.5	3.52	18.8	3.46	18.0	3.40	16.7	3.28	15.3	3.15
	7.0	6.0	22.2	3.57	20.9	3.48	19.5	3.39	18.8	3.33	18.0	3.28	16.7	3.17	15.3	3.04
	8.6	7.5	22.2	3.34	20.9	3.27	19.5	3.18	18.8	3.14	18.0	3.09	16.7	2.99	15.3	2.89
	11.2	10.0	22.2	3.27	20.9	3.13	19.5	2.99	18.8	2.93	18.0	2.85	16.7	2.73	15.3	2.64
	16.4	15.0	22.2	3.27	20.9	3.13	19.5	2.99	18.8	2.93	18.0	2.85	16.7	2.73	15.3	2.59

Combination(%) :Indoor/outdoor capacity ratio	Outdoor air temp.		Indoor air temp. : °CDB													
			15.0		17.0		19.0		20.0		21.0		23.0		25.0	
			TC	PI	TC	PI	TC	PI	TC	PI	TC	PI	TC	PI	TC	PI
	°CDB	°CWB	kW	kW	kW	kW	kW	kW	kW	kW	kW	kW	kW	kW	kW	kW
40%	-24.9	-25.0	17.8	5.00	16.7	4.90	15.6	4.76	15.0	4.68	14.4	4.62	13.4	4.47	12.2	4.33
	-19.8	-20.0	17.8	4.77	16.7	4.68	15.6	4.58	15.0	4.52	14.4	4.45	13.4	4.30	12.2	4.15
	-14.7	-15.0	17.8	4.51	16.7	4.43	15.6	4.34	15.0	4.29	14.4	4.24	13.4	4.12	12.2	3.97
	-9.6	-10.0	17.8	4.21	16.7	4.14	15.6	4.06	15.0	4.02	14.4	3.97	13.4	3.86	12.2	3.75
	-4.4	-5.0	17.8	3.84	16.7	3.79	15.6	3.71	15.0	3.68	14.4	3.64	13.4	3.55	12.2	3.45
	-1.8	-2.5	17.8	3.63	16.7	3.58	15.6	3.51	15.0	3.49	14.4	3.45	13.4	3.35	12.2	3.21
	0.8	0.0	17.8	3.39	16.7	3.36	15.6	3.28	15.0	3.24	14.4	3.19	13.4	3.09	12.2	2.98
	2.8	2.0	17.8	3.18	16.7	3.13	15.6	3.07	15.0	3.03	14.4	2.99	13.4	2.90	12.2	2.81
	6.0	5.0	17.8	2.83	16.7	2.78	15.6	2.75	15.0	2.72	14.4	2.69	13.4	2.63	12.2	2.55
	7.0	6.0	17.8	2.83	16.7	2.73	15.6	2.64	15.0	2.62	14.4	2.60	13.4	2.54	12.2	2.48
	8.6	7.5	17.8	2.83	16.7	2.73	15.6	2.62	15.0	2.56	14.4	2.51	13.4	2.42	12.2	2.36
	11.2	10.0	17.8	2.83	16.7	2.73	15.6	2.62	15.0	2.56	14.4	2.51	13.4	2.40	12.2	2.29
	16.4	15.0	17.8	2.83	16.7	2.73	15.6	2.62	15.0	2.56	14.4	2.51	13.4	2.40	12.2	2.29

Combination(%) :Indoor/outdoor capacity ratio	Outdoor air temp.		Indoor air temp. : °CDB													
			15.0		17.0		19.0		20.0		21.0		23.0		25.0	
			TC	PI	TC	PI	TC	PI	TC	PI	TC	PI	TC	PI	TC	PI
	°CDB	°CWB	kW	kW	kW	kW	kW	kW	kW	kW	kW	kW	kW	kW	kW	kW
30%	-24.9	-25.0	13.4	3.91	12.5	3.87	11.7	3.81	11.3	3.76	10.8	3.72	10.0	3.63	9.2	3.54
	-19.8	-20.0	13.4	3.72	12.5	3.70	11.7	3.65	11.3	3.62	10.8	3.59	10.0	3.50	9.2	3.39
	-14.7	-15.0	13.4	3.52	12.5	3.50	11.7	3.46	11.3	3.43	10.8	3.41	10.0	3.35	9.2	3.25
	-9.6	-10.0	13.4	3.28	12.5	3.26	11.7	3.23	11.3	3.21	10.8	3.19	10.0	3.14	9.2	3.06
	-4.4	-5.0	13.4	2.97	12.5	2.96	11.7	2.92	11.3	2.89	10.8	2.85	10.0	2.78	9.2	2.70
	-1.8	-2.5	13.4	2.78	12.5	2.75	11.7	2.71	11.3	2.68	10.8	2.66	10.0	2.60	9.2	2.53
	0.8	0.0	13.4	2.54	12.5	2.53	11.7	2.51	11.3	2.49	10.8	2.47	10.0	2.42	9.2	2.36
	2.8	2.0	13.4	2.40	12.5	2.36	11.7	2.34	11.3	2.33	10.8	2.32	10.0	2.29	9.2	2.24
	6.0	5.0	13.4	2.40	12.5	2.31	11.7	2.23	11.3	2.19	10.8	2.15	10.0	2.09	9.2	2.06
	7.0	6.0	13.4	2.40	12.5	2.31	11.7	2.23	11.3	2.19	10.8	2.15	10.0	2.07	9.2	2.00
	8.6	7.5	13.4	2.40	12.5	2.31	11.7	2.23	11.3	2.19	10.8	2.15	10.0	2.07	9.2	1.99
	11.2	10.0	13.4	2.40	12.5	2.31	11.7	2.23	11.3	2.19	10.8	2.15	10.0	2.07	9.2	1.99
	16.4	15.0	13.4	2.40	12.5	2.31	11.7	2.23	11.3	2.19	10.8	2.15	10.0	2.07	9.2	1.99

1. Capacity Ratio of Outdoor Unit (Standard-COP mode)

1-7. U-14ME1E81 (Cooling)

Capacity Ratio 30-130%

TC: Total capacity (kW), PI: Power input (kW)

Combination(%) :Indoor/outdoor capacity ratio	Outdoor air temp. ℃DB	Indoor air temp. ：℃WB													
		16.0		17.0		18.0		19.0		20.0		21.0		22.0	
		TC	PI	TC	PI	TC	PI	TC	PI	TC	PI	TC	PI	TC	PI
		kW	kW	kW	kW	kW	kW	kW	kW	kW	kW	kW	kW	kW	kW
130%	-10.0	43.0	4.98	43.0	4.98	43.0	4.98	43.0	4.98	45.9	5.32	48.7	5.65	51.6	5.99
	-5.0	43.0	5.00	43.0	5.00	43.0	5.00	43.0	5.00	45.9	5.34	48.7	5.68	51.6	6.03
	0.0	43.0	5.04	43.0	5.04	43.0	5.04	43.0	5.04	45.9	5.38	48.7	5.74	51.6	6.08
	5.0	43.0	5.11	43.0	5.11	43.0	5.11	43.0	5.11	45.9	5.47	48.7	5.84	51.6	6.19
	10.0	43.0	5.26	43.0	5.26	43.0	5.26	43.0	5.26	45.9	5.65	48.7	6.05	51.6	6.45
	15.0	43.0	5.68	43.0	5.68	43.0	5.68	43.0	5.68	45.9	6.15	48.7	6.68	51.6	7.31
	20.0	43.0	6.98	43.0	6.98	43.0	6.98	43.0	6.98	45.9	7.67	48.7	8.40	51.6	9.18
	25.0	43.0	8.59	43.0	8.59	43.0	8.59	43.0	8.59	45.9	9.42	48.7	10.30	51.6	11.22
	30.0	43.0	10.35	43.0	10.35	43.0	10.35	43.0	10.35	45.9	11.33	48.7	12.38	51.6	13.46
	35.0	43.0	12.27	43.0	12.27	43.0	12.27	43.0	12.27	45.9	13.41	48.4	14.43	49.4	14.43
	40.0	43.0	14.33	43.0	14.33	43.0	14.33	43.0	14.33	44.0	14.43	45.0	14.43	45.9	14.43
	43.0	41.2	14.43	41.2	14.43	41.2	14.43	41.2	14.43	42.1	14.43	43.0	14.43	43.9	14.43

Combination(%) :Indoor/outdoor capacity ratio	Outdoor air temp. ℃DB	Indoor air temp. ：℃WB													
		16.0		17.0		18.0		19.0		20.0		21.0		22.0	
		TC	PI	TC	PI	TC	PI	TC	PI	TC	PI	TC	PI	TC	PI
		kW	kW	kW	kW	kW	kW	kW	kW	kW	kW	kW	kW	kW	kW
120%	-10.0	40.3	4.65	42.0	4.86	42.0	4.86	42.0	4.86	44.8	5.19	47.6	5.52	50.4	5.85
	-5.0	40.3	4.66	42.0	4.88	42.0	4.88	42.0	4.88	44.8	5.22	47.6	5.55	50.4	5.88
	0.0	40.3	4.68	42.0	4.92	42.0	4.92	42.0	4.92	44.8	5.25	47.6	5.59	50.4	5.94
	5.0	40.3	4.72	42.0	4.98	42.0	4.98	42.0	4.98	44.8	5.33	47.6	5.68	50.4	6.05
	10.0	40.3	4.80	42.0	5.13	42.0	5.13	42.0	5.13	44.8	5.51	47.6	5.89	50.4	6.28
	15.0	40.3	5.01	42.0	5.52	42.0	5.52	42.0	5.52	44.8	5.97	47.6	6.44	50.4	7.04
	20.0	40.3	5.78	42.0	6.75	42.0	6.75	42.0	6.75	44.8	7.40	47.6	8.10	50.4	8.85
	25.0	40.3	7.20	42.0	8.30	42.0	8.30	42.0	8.30	44.8	9.10	47.6	9.93	50.4	10.82
	30.0	40.3	8.75	42.0	10.01	42.0	10.01	42.0	10.01	44.8	10.96	47.6	11.95	50.4	12.99
	35.0	40.3	10.43	42.0	11.87	42.0	11.87	42.0	11.87	44.8	12.96	47.6	14.12	49.0	14.43
	40.0	40.3	12.27	42.0	13.88	42.0	13.88	42.0	13.88	43.7	14.43	44.6	14.43	45.5	14.43
	43.0	40.3	13.43	41.0	14.43	41.0	14.43	41.0	14.43	41.8	14.43	42.7	14.43	43.6	14.43

Combination(%) :Indoor/outdoor capacity ratio	Outdoor air temp. ℃DB	Indoor air temp. ：℃WB													
		16.0		17.0		18.0		19.0		20.0		21.0		22.0	
		TC	PI	TC	PI	TC	PI	TC	PI	TC	PI	TC	PI	TC	PI
		kW	kW	kW	kW	kW	kW	kW	kW	kW	kW	kW	kW	kW	kW
110%	-10.0	36.1	4.16	39.1	4.52	41.0	4.75	41.0	4.75	43.7	5.06	46.5	5.38	49.2	5.71
	-5.0	36.1	4.17	39.1	4.53	41.0	4.76	41.0	4.76	43.7	5.08	46.5	5.42	49.2	5.74
	0.0	36.1	4.20	39.1	4.55	41.0	4.80	41.0	4.80	43.7	5.13	46.5	5.46	49.2	5.79
	5.0	36.1	4.23	39.1	4.60	41.0	4.86	41.0	4.86	43.7	5.19	46.5	5.54	49.2	5.89
	10.0	36.1	4.30	39.1	4.68	41.0	5.00	41.0	5.00	43.7	5.36	46.5	5.74	49.2	6.12
	15.0	36.1	4.50	39.1	4.93	41.0	5.35	41.0	5.35	43.7	5.79	46.5	6.25	49.2	6.77
	20.0	36.1	5.22	39.1	5.79	41.0	6.52	41.0	6.52	43.7	7.15	46.5	7.81	49.2	8.51
	25.0	36.1	6.48	39.1	7.18	41.0	8.03	41.0	8.03	43.7	8.78	46.5	9.59	49.2	10.43
	30.0	36.1	7.86	39.1	8.70	41.0	9.68	41.0	9.68	43.7	10.58	46.5	11.53	49.2	12.53
	35.0	36.1	9.36	39.1	10.37	41.0	11.48	41.0	11.48	43.7	12.53	46.5	13.64	48.6	14.43
	40.0	36.1	10.98	39.1	12.15	41.0	13.42	41.0	13.42	43.4	14.43	44.3	14.43	45.2	14.43
	43.0	36.1	12.02	39.1	13.30	40.7	14.43	40.7	14.43	41.5	14.43	42.4	14.43	43.2	14.43

Combination(%) :Indoor/outdoor capacity ratio	Outdoor air temp. ℃DB	Indoor air temp. ：℃WB													
		16.0		17.0		18.0		19.0		20.0		21.0		22.0	
		TC	PI	TC	PI	TC	PI	TC	PI	TC	PI	TC	PI	TC	PI
		kW	kW	kW	kW	kW	kW	kW	kW	kW	kW	kW	kW	kW	kW
100%	-10.0	32.0	3.70	34.7	4.01	37.3	4.32	40.0	4.63	42.7	4.94	45.3	5.25	48.0	5.57
	-5.0	32.0	3.71	34.7	4.02	37.3	4.33	40.0	4.64	42.7	4.96	45.3	5.27	48.0	5.59
	0.0	32.0	3.72	34.7	4.04	37.3	4.35	40.0	4.67	42.7	5.00	45.3	5.32	48.0	5.64
	5.0	32.0	3.75	34.7	4.07	37.3	4.41	40.0	4.73	42.7	5.06	45.3	5.39	48.0	5.74
	10.0	32.0	3.82	34.7	4.16	37.3	4.51	40.0	4.86	42.7	5.22	45.3	5.57	48.0	5.95
	15.0	32.0	4.01	34.7	4.40	37.3	4.78	40.0	5.19	42.7	5.62	45.3	6.05	48.0	6.50
	20.0	32.0	4.70	34.7	5.19	37.3	5.72	40.0	6.28	42.7	6.89	45.3	7.53	48.0	8.19
	25.0	32.0	5.79	34.7	6.42	37.3	7.06	40.0	7.75	42.7	8.48	45.3	9.25	48.0	10.05
	30.0	32.0	7.02	34.7	7.75	37.3	8.54	40.0	9.36	42.7	10.22	45.3	11.12	48.0	12.08
	35.0	32.0	8.34	34.7	9.21	37.3	10.13	40.0	11.10	42.7	12.11	45.3	13.16	48.0	14.27
	40.0	32.0	9.77	34.7	10.79	37.3	11.85	40.0	12.98	42.7	14.15	44.0	14.43	44.8	14.43
	43.0	32.0	10.69	34.7	11.80	37.3	12.96	40.0	14.17	41.2	14.43	42.0	14.43	42.9	14.43

1. Capacity Ratio of Outdoor Unit (Standard-COP mode)

U-14ME1E81 (Cooling) **Capacity Ratio 30-130%**

TC: Total capacity (kW), PI: Power input (kW)

Combination(%) :Indoor/outdoor capacity ratio	Outdoor air temp. ℃DB	Indoor air temp. : ℃WB													
		16.0		17.0		18.0		19.0		20.0		21.0		22.0	
		TC	PI	TC	PI	TC	PI	TC	PI	TC	PI	TC	PI	TC	PI
		kW	kW	kW	kW	kW	kW	kW	kW	kW	kW	kW	kW	kW	kW
90%	-10.0	28.8	3.33	31.2	3.61	33.6	3.89	36.0	4.16	38.4	4.44	40.8	4.72	43.2	5.01
	-5.0	28.8	3.33	31.2	3.61	33.6	3.90	36.0	4.17	38.4	4.45	40.8	4.74	43.2	5.03
	0.0	28.8	3.34	31.2	3.63	33.6	3.91	36.0	4.20	38.4	4.48	40.8	4.77	43.2	5.06
	5.0	28.8	3.36	31.2	3.65	33.6	3.94	36.0	4.24	38.4	4.53	40.8	4.83	43.2	5.13
	10.0	28.8	3.42	31.2	3.72	33.6	4.02	36.0	4.33	38.4	4.64	40.8	4.96	43.2	5.28
	15.0	28.8	3.55	31.2	3.89	33.6	4.23	36.0	4.58	38.4	4.94	40.8	5.32	43.2	5.69
	20.0	28.8	4.06	31.2	4.52	33.6	4.97	36.0	5.44	38.4	5.93	40.8	6.44	43.2	6.98
	25.0	28.8	5.09	31.2	5.61	33.6	6.15	36.0	6.72	38.4	7.31	40.8	7.94	43.2	8.60
	30.0	28.8	6.16	31.2	6.78	33.6	7.44	36.0	8.11	38.4	8.82	40.8	9.58	43.2	10.37
	35.0	28.8	7.33	31.2	8.07	33.6	8.84	36.0	9.65	38.4	10.49	40.8	11.37	43.2	12.28
	40.0	28.8	8.59	31.2	9.46	33.6	10.36	36.0	11.29	38.4	12.27	40.8	13.29	43.2	14.35
	43.0	28.8	9.40	31.2	10.33	33.6	11.32	36.0	12.34	38.4	13.41	40.7	14.43	41.5	14.43

Combination(%) :Indoor/outdoor capacity ratio	Outdoor air temp. ℃DB	Indoor air temp. : ℃WB													
		16.0		17.0		18.0		19.0		20.0		21.0		22.0	
		TC	PI	TC	PI	TC	PI	TC	PI	TC	PI	TC	PI	TC	PI
		kW	kW	kW	kW	kW	kW	kW	kW	kW	kW	kW	kW	kW	kW
80%	-10.0	25.6	2.95	27.7	3.20	29.9	3.45	32.0	3.70	34.1	3.94	36.3	4.20	38.4	4.44
	-5.0	25.6	2.96	27.7	3.21	29.9	3.45	32.0	3.71	34.1	3.95	36.3	4.21	38.4	4.45
	0.0	25.6	2.96	27.7	3.22	29.9	3.46	32.0	3.72	34.1	3.97	36.3	4.23	38.4	4.48
	5.0	25.6	2.99	27.7	3.24	29.9	3.50	32.0	3.75	34.1	4.01	36.3	4.27	38.4	4.53
	10.0	25.6	3.02	27.7	3.29	29.9	3.55	32.0	3.82	34.1	4.08	36.3	4.36	38.4	4.64
	15.0	25.6	3.12	27.7	3.41	29.9	3.70	32.0	4.00	34.1	4.31	36.3	4.62	38.4	4.94
	20.0	25.6	3.49	27.7	3.86	29.9	4.25	32.0	4.66	34.1	5.05	36.3	5.46	38.4	5.91
	25.0	25.6	4.45	27.7	4.86	29.9	5.31	32.0	5.77	34.1	6.25	36.3	6.76	38.4	7.28
	30.0	25.6	5.37	27.7	5.88	29.9	6.42	32.0	6.97	34.1	7.56	36.3	8.17	38.4	8.80
	35.0	25.6	6.38	27.7	6.99	29.9	7.64	32.0	8.29	34.1	8.99	36.3	9.70	38.4	10.46
	40.0	25.6	7.49	27.7	8.20	29.9	8.95	32.0	9.72	34.1	10.52	36.3	11.37	38.4	12.23
	43.0	25.6	8.18	27.7	8.97	29.9	9.79	32.0	10.63	34.1	11.51	36.3	12.43	38.4	13.38

Combination(%) :Indoor/outdoor capacity ratio	Outdoor air temp. ℃DB	Indoor air temp. : ℃WB													
		16.0		17.0		18.0		19.0		20.0		21.0		22.0	
		TC	PI	TC	PI	TC	PI	TC	PI	TC	PI	TC	PI	TC	PI
		kW	kW	kW	kW	kW	kW	kW	kW	kW	kW	kW	kW	kW	kW
70%	-10.0	22.4	2.59	24.3	2.80	26.1	3.02	28.0	3.23	29.9	3.45	31.7	3.66	33.6	3.89
	-5.0	22.4	2.59	24.3	2.81	26.1	3.02	28.0	3.24	29.9	3.45	31.7	3.67	33.6	3.90
	0.0	22.4	2.60	24.3	2.81	26.1	3.03	28.0	3.25	29.9	3.46	31.7	3.69	33.6	3.91
	5.0	22.4	2.61	24.3	2.82	26.1	3.04	28.0	3.27	29.9	3.50	31.7	3.72	33.6	3.94
	10.0	22.4	2.63	24.3	2.85	26.1	3.09	28.0	3.32	29.9	3.55	31.7	3.79	33.6	4.02
	15.0	22.4	2.70	24.3	2.94	26.1	3.19	28.0	3.44	29.9	3.70	31.7	3.95	33.6	4.22
	20.0	22.4	2.95	24.3	3.25	26.1	3.56	28.0	3.90	29.9	4.23	31.7	4.58	33.6	4.93
	25.0	22.4	3.85	24.3	4.18	26.1	4.54	28.0	4.91	29.9	5.28	31.7	5.68	33.6	6.11
	30.0	22.4	4.64	24.3	5.05	26.1	5.48	28.0	5.93	29.9	6.39	31.7	6.88	33.6	7.38
	35.0	22.4	5.51	24.3	6.01	26.1	6.52	28.0	7.05	29.9	7.60	31.7	8.18	33.6	8.78
	40.0	22.4	6.45	24.3	7.04	26.1	7.65	28.0	8.27	29.9	8.92	31.7	9.59	33.6	10.29
	43.0	22.4	7.05	24.3	7.69	26.1	8.36	28.0	9.05	29.9	9.76	31.7	10.49	33.6	11.26

Combination(%) :Indoor/outdoor capacity ratio	Outdoor air temp. ℃DB	Indoor air temp. : ℃WB													
		16.0		17.0		18.0		19.0		20.0		21.0		22.0	
		TC	PI	TC	PI	TC	PI	TC	PI	TC	PI	TC	PI	TC	PI
		kW	kW	kW	kW	kW	kW	kW	kW	kW	kW	kW	kW	kW	kW
60%	-10.0	19.2	2.21	20.8	2.40	22.4	2.59	24.0	2.76	25.6	2.95	27.2	3.14	28.8	3.33
	-5.0	19.2	2.22	20.8	2.40	22.4	2.59	24.0	2.78	25.6	2.96	27.2	3.14	28.8	3.33
	0.0	19.2	2.22	20.8	2.41	22.4	2.60	24.0	2.78	25.6	2.96	27.2	3.15	28.8	3.34
	5.0	19.2	2.23	20.8	2.42	22.4	2.61	24.0	2.80	25.6	2.99	27.2	3.17	28.8	3.36
	10.0	19.2	2.24	20.8	2.43	22.4	2.63	24.0	2.82	25.6	3.02	27.2	3.22	28.8	3.42
	15.0	19.2	2.29	20.8	2.49	22.4	2.70	24.0	2.91	25.6	3.11	27.2	3.33	28.8	3.54
	20.0	19.2	2.45	20.8	2.69	22.4	2.94	24.0	3.20	25.6	3.46	27.2	3.73	28.8	4.02
	25.0	19.2	3.31	20.8	3.56	22.4	3.84	24.0	4.12	25.6	4.42	27.2	4.72	28.8	5.04
	30.0	19.2	3.97	20.8	4.30	22.4	4.63	24.0	4.97	25.6	5.34	27.2	5.72	28.8	6.09
	35.0	19.2	4.70	20.8	5.08	22.4	5.49	24.0	5.91	25.6	6.35	27.2	6.79	28.8	7.26
	40.0	19.2	5.48	20.8	5.95	22.4	6.43	24.0	6.93	25.6	7.44	27.2	7.97	28.8	8.51
	43.0	19.2	5.98	20.8	6.50	22.4	7.03	24.0	7.57	25.6	8.14	27.2	8.71	28.8	9.31

1. Capacity Ratio of Outdoor Unit (Standard-COP mode)

U-14ME1E81 (Cooling) **Capacity Ratio 30-130%**

TC: Total capacity (kW), PI: Power input (kW)

Combination(%) :Indoor/outdoor capacity ratio	Outdoor air temp. ℃DB	Indoor air temp. :℃WB													
		16.0		17.0		18.0		19.0		20.0		21.0		22.0	
		TC	PI	TC	PI	TC	PI	TC	PI	TC	PI	TC	PI	TC	PI
		kW	kW	kW	kW	kW	kW	kW	kW	kW	kW	kW	kW	kW	kW
50%	-10.0	16.0	1.84	17.3	2.00	18.7	2.15	20.0	2.31	21.3	2.46	22.7	2.61	24.0	2.76
	-5.0	16.0	1.84	17.3	2.00	18.7	2.15	20.0	2.31	21.3	2.46	22.7	2.62	24.0	2.78
	0.0	16.0	1.85	17.3	2.00	18.7	2.15	20.0	2.31	21.3	2.46	22.7	2.62	24.0	2.78
	5.0	16.0	1.85	17.3	2.01	18.7	2.16	20.0	2.32	21.3	2.48	22.7	2.63	24.0	2.80
	10.0	16.0	1.86	17.3	2.02	18.7	2.18	20.0	2.34	21.3	2.50	22.7	2.66	24.0	2.82
	15.0	16.0	1.89	17.3	2.05	18.7	2.22	20.0	2.39	21.3	2.55	22.7	2.73	24.0	2.90
	20.0	16.0	1.99	17.3	2.18	18.7	2.36	20.0	2.56	21.3	2.76	22.7	2.96	24.0	3.17
	25.0	16.0	2.71	17.3	3.01	18.7	3.21	20.0	3.42	21.3	3.64	22.7	3.86	24.0	4.10
	30.0	16.0	3.35	17.3	3.60	18.7	3.85	20.0	4.12	21.3	4.38	22.7	4.66	24.0	4.95
	35.0	16.0	3.94	17.3	4.24	18.7	4.55	20.0	4.86	21.3	5.19	22.7	5.54	24.0	5.88
	40.0	16.0	4.58	17.3	4.94	18.7	5.31	20.0	5.69	21.3	6.08	22.7	6.48	24.0	6.89
	43.0	16.0	5.00	17.3	5.39	18.7	5.79	20.0	6.22	21.3	6.65	22.7	7.08	24.0	7.54

Combination(%) :Indoor/outdoor capacity ratio	Outdoor air temp. ℃DB	Indoor air temp. :℃WB													
		16.0		17.0		18.0		19.0		20.0		21.0		22.0	
		TC	PI	TC	PI	TC	PI	TC	PI	TC	PI	TC	PI	TC	PI
		kW	kW	kW	kW	kW	kW	kW	kW	kW	kW	kW	kW	kW	kW
40%	-10.0	12.8	1.48	13.9	1.60	14.9	1.72	16.0	1.84	17.1	1.96	18.1	2.09	19.2	2.21
	-5.0	12.8	1.48	13.9	1.60	14.9	1.72	16.0	1.84	17.1	1.96	18.1	2.10	19.2	2.22
	0.0	12.8	1.48	13.9	1.60	14.9	1.72	16.0	1.85	17.1	1.98	18.1	2.10	19.2	2.22
	5.0	12.8	1.48	13.9	1.61	14.9	1.73	16.0	1.85	17.1	1.98	18.1	2.10	19.2	2.23
	10.0	12.8	1.49	13.9	1.61	14.9	1.73	16.0	1.86	17.1	1.99	18.1	2.12	19.2	2.24
	15.0	12.8	1.50	13.9	1.63	14.9	1.75	16.0	1.89	17.1	2.02	18.1	2.15	19.2	2.29
	20.0	12.8	1.55	13.9	1.69	14.9	1.83	16.0	1.98	17.1	2.13	18.1	2.28	19.2	2.43
	25.0	12.8	1.93	13.9	2.16	14.9	2.40	16.0	2.65	17.1	2.92	18.1	3.11	19.2	3.27
	30.0	12.8	2.79	13.9	2.96	14.9	3.14	16.0	3.33	17.1	3.53	18.1	3.73	19.2	3.93
	35.0	12.8	3.24	13.9	3.46	14.9	3.69	16.0	3.92	17.1	4.15	18.1	4.40	19.2	4.65
	40.0	12.8	3.74	13.9	4.01	14.9	4.28	16.0	4.56	17.1	4.84	18.1	5.14	19.2	5.43
	43.0	12.8	4.06	13.9	4.36	14.9	4.66	16.0	4.97	17.1	5.28	18.1	5.61	19.2	5.93

Combination(%) :Indoor/outdoor capacity ratio	Outdoor air temp. ℃DB	Indoor air temp. :℃WB													
		16.0		17.0		18.0		19.0		20.0		21.0		22.0	
		TC	PI	TC	PI	TC	PI	TC	PI	TC	PI	TC	PI	TC	PI
		kW	kW	kW	kW	kW	kW	kW	kW	kW	kW	kW	kW	kW	kW
30%	-10.0	9.6	1.11	10.4	1.20	11.2	1.29	12.0	1.39	12.8	1.48	13.6	1.57	14.4	1.67
	-5.0	9.6	1.11	10.4	1.20	11.2	1.29	12.0	1.39	12.8	1.48	13.6	1.57	14.4	1.67
	0.0	9.6	1.11	10.4	1.20	11.2	1.29	12.0	1.39	12.8	1.48	13.6	1.57	14.4	1.67
	5.0	9.6	1.11	10.4	1.20	11.2	1.30	12.0	1.39	12.8	1.48	13.6	1.58	14.4	1.67
	10.0	9.6	1.11	10.4	1.21	11.2	1.30	12.0	1.39	12.8	1.49	13.6	1.58	14.4	1.68
	15.0	9.6	1.12	10.4	1.21	11.2	1.31	12.0	1.40	12.8	1.50	13.6	1.60	14.4	1.69
	20.0	9.6	1.14	10.4	1.24	11.2	1.34	12.0	1.44	12.8	1.54	13.6	1.65	14.4	1.75
	25.0	9.6	1.31	10.4	1.45	11.2	1.60	12.0	1.74	12.8	1.90	13.6	2.05	14.4	2.22
	30.0	9.6	2.26	10.4	2.39	11.2	2.51	12.0	2.64	12.8	2.76	13.6	2.90	14.4	3.03
	35.0	9.6	2.61	10.4	2.75	11.2	2.91	12.0	3.06	12.8	3.22	13.6	3.39	14.4	3.55
	40.0	9.6	2.97	10.4	3.15	11.2	3.34	12.0	3.53	12.8	3.72	13.6	3.92	14.4	4.12
	43.0	9.6	3.21	10.4	3.41	11.2	3.62	12.0	3.83	12.8	4.04	13.6	4.26	14.4	4.48

1. Capacity Ratio of Outdoor Unit (Standard-COP mode)

1-8. U-14ME1E81 (Heating)

Capacity Ratio 30-130%

TC: Total capacity (kW), PI: Power input (kW)

Combination(%) :Indoor/outdoor capacity ratio	Outdoor air temp.		Indoor air temp. : ℃CDB													
			15.0		17.0		19.0		20.0		21.0		23.0		25.0	
			TC	PI	TC	PI	TC	PI	TC	PI	TC	PI	TC	PI	TC	PI
	℃CDB	℃CWB	kW	kW	kW	kW	kW	kW	kW	kW	kW	kW	kW	kW	kW	kW
130%	-24.9	-25.0	32.1	11.64	30.5	10.92	28.8	10.22	27.9	9.87	27.9	9.87	27.9	9.87	27.9	9.87
	-19.8	-20.0	33.8	11.76	32.1	11.05	30.3	10.35	29.4	9.99	29.4	9.99	29.4	9.99	29.4	9.99
	-14.7	-15.0	35.9	11.94	34.1	11.25	32.2	10.54	31.3	10.19	31.3	10.19	31.3	10.19	31.3	10.19
	-9.6	-10.0	38.5	12.24	36.6	11.53	34.7	10.83	33.8	10.48	33.8	10.48	33.8	10.48	33.8	10.48
	-4.4	-5.0	42.0	12.69	40.1	11.98	38.1	11.27	37.0	10.91	37.0	10.91	37.0	10.91	37.0	10.91
	-1.8	-2.5	44.2	12.99	42.3	12.28	40.2	11.56	39.1	11.19	39.1	11.19	39.1	11.19	39.1	11.19
	0.8	0.0	46.9	13.35	44.9	12.63	42.7	11.90	41.6	11.52	41.6	11.52	41.6	11.52	41.6	11.52
	2.8	2.0	49.5	13.69	47.3	12.96	45.1	12.22	44.0	11.84	44.0	11.84	44.0	11.84	44.0	11.84
	6.0	5.0	53.4	13.91	52.0	13.61	49.8	12.91	48.4	12.45	48.4	12.45	48.4	12.45	48.4	12.45
	7.0	6.0	54.8	13.91	53.7	13.81	50.2	12.64	48.4	12.08	48.4	12.08	48.4	12.08	48.4	12.08
	8.6	7.5	56.5	13.91	53.7	13.14	50.2	12.06	48.4	11.52	48.4	11.52	48.4	11.52	48.4	11.52
	11.2	10.0	57.3	13.09	53.7	11.99	50.2	10.96	48.4	10.46	48.4	10.46	48.4	10.46	48.4	10.46
	16.4	15.0	57.3	10.60	53.7	9.75	50.2	8.92	48.4	8.53	48.4	8.53	48.4	8.53	48.4	8.53

Combination(%) :Indoor/outdoor capacity ratio	Outdoor air temp.		Indoor air temp. : ℃CDB													
			15.0		17.0		19.0		20.0		21.0		23.0		25.0	
			TC	PI	TC	PI	TC	PI	TC	PI	TC	PI	TC	PI	TC	PI
	℃CDB	℃CWB	kW	kW	kW	kW	kW	kW	kW	kW	kW	kW	kW	kW	kW	kW
120%	-24.9	-25.0	32.2	11.48	30.5	10.80	28.8	10.10	27.9	9.76	27.9	9.76	27.9	9.76	27.9	9.76
	-19.8	-20.0	33.9	11.61	32.1	10.92	30.4	10.24	29.5	9.90	29.5	9.90	29.5	9.90	29.5	9.90
	-14.7	-15.0	35.9	11.81	34.1	11.13	32.3	10.43	31.4	10.09	31.4	10.09	31.4	10.09	31.4	10.09
	-9.6	-10.0	38.6	12.11	36.7	11.43	34.7	10.73	33.8	10.39	33.8	10.39	33.8	10.39	33.8	10.39
	-4.4	-5.0	42.1	12.57	40.1	11.88	38.1	11.17	37.0	10.82	37.0	10.82	37.0	10.82	37.0	10.82
	-1.8	-2.5	44.3	12.87	42.3	12.17	40.2	11.46	39.1	11.10	39.1	11.10	39.1	11.10	39.1	11.10
	0.8	0.0	47.0	13.23	44.9	12.51	42.7	11.79	41.6	11.42	41.6	11.42	41.6	11.42	41.6	11.42
	2.8	2.0	49.5	13.55	47.3	12.83	45.1	12.11	44.0	11.74	44.0	11.74	44.0	11.74	44.0	11.74
	6.0	5.0	53.6	13.91	52.1	13.50	49.0	12.52	47.3	11.96	47.3	11.96	47.3	11.96	46.2	11.12
	7.0	6.0	55.0	13.91	52.5	13.23	49.0	12.13	47.3	11.61	47.3	11.61	47.3	11.61	46.2	10.74
	8.6	7.5	56.0	13.67	52.5	12.60	49.0	11.57	47.3	11.04	47.3	11.04	47.3	11.04	46.2	10.15
	11.2	10.0	56.0	12.47	52.5	11.45	49.0	10.48	47.3	10.02	47.3	10.02	47.3	10.02	46.2	9.22
	16.4	15.0	56.0	10.09	52.5	9.29	49.0	8.52	47.3	8.15	47.3	8.15	47.3	8.15	46.2	7.53

Combination(%) :Indoor/outdoor capacity ratio	Outdoor air temp.		Indoor air temp. : ℃CDB													
			15.0		17.0		19.0		20.0		21.0		23.0		25.0	
			TC	PI	TC	PI	TC	PI	TC	PI	TC	PI	TC	PI	TC	PI
	℃CDB	℃CWB	kW	kW	kW	kW	kW	kW	kW	kW	kW	kW	kW	kW	kW	kW
110%	-24.9	-25.0	32.2	11.33	30.6	10.67	28.8	9.99	27.9	9.65	27.9	9.65	27.8	9.44	25.7	8.72
	-19.8	-20.0	33.9	11.48	32.2	10.80	30.4	10.13	29.5	9.79	29.5	9.79	29.4	9.59	27.3	8.86
	-14.7	-15.0	36.0	11.67	34.2	11.01	32.3	10.34	31.4	9.99	31.4	9.99	31.3	9.79	29.1	9.06
	-9.6	-10.0	38.6	11.98	36.7	11.31	34.8	10.64	33.8	10.29	33.8	10.29	33.8	10.29	31.5	9.35
	-4.4	-5.0	42.2	12.45	40.2	11.77	38.1	11.07	37.1	10.72	37.1	10.72	37.1	10.72	34.7	9.76
	-1.8	-2.5	44.4	12.75	42.3	12.06	40.2	11.35	39.2	11.00	39.2	11.00	39.2	11.00	36.7	10.03
	0.8	0.0	47.1	13.10	44.9	12.39	42.7	11.67	41.6	11.32	41.6	11.32	41.6	11.32	39.1	10.35
	2.8	2.0	49.5	13.42	47.3	12.71	45.1	11.99	43.9	11.63	43.9	11.63	43.9	11.63	41.4	10.65
	6.0	5.0	53.9	13.91	51.3	13.08	47.8	12.01	46.1	11.49	46.1	11.49	45.1	10.92	41.4	9.88
	7.0	6.0	54.7	13.75	51.3	12.68	47.8	11.65	46.1	11.16	46.1	11.16	45.1	10.57	41.4	9.54
	8.6	7.5	54.7	13.10	51.3	12.07	47.8	11.05	46.1	10.57	46.1	10.57	45.1	9.99	41.4	9.02
	11.2	10.0	54.7	11.88	51.3	10.92	47.8	10.02	46.1	9.58	46.1	9.58	45.1	9.06	41.4	8.20
	16.4	15.0	54.7	9.59	51.3	8.84	47.8	8.13	46.1	7.78	46.1	7.78	45.1	7.38	41.4	6.70

Combination(%) :Indoor/outdoor capacity ratio	Outdoor air temp.		Indoor air temp. : ℃CDB													
			15.0		17.0		19.0		20.0		21.0		23.0		25.0	
			TC	PI	TC	PI	TC	PI	TC	PI	TC	PI	TC	PI	TC	PI
	℃CDB	℃CWB	kW	kW	kW	kW	kW	kW	kW	kW	kW	kW	kW	kW	kW	kW
100%	-24.9	-25.0	32.3	11.19	30.6	10.54	28.8	9.88	28.0	9.56	27.1	9.22	25.3	8.58	23.4	7.95
	-19.8	-20.0	34.0	11.34	32.3	10.69	30.5	10.03	29.5	9.69	28.6	9.37	26.7	8.72	24.8	8.08
	-14.7	-15.0	36.1	11.56	34.2	10.89	32.4	10.24	31.4	9.91	30.5	9.58	28.5	8.91	26.5	8.26
	-9.6	-10.0	38.7	11.87	36.8	11.21	34.8	10.54	33.8	10.20	32.9	9.87	30.8	9.19	28.6	8.52
	-4.4	-5.0	42.2	12.33	40.2	11.65	38.2	10.97	37.1	10.63	36.0	10.28	33.8	9.59	31.5	8.89
	-1.8	-2.5	44.5	12.63	42.4	11.94	40.2	11.25	39.2	10.89	38.0	10.54	35.7	9.83	33.3	9.12
	0.8	0.0	47.1	12.98	45.0	12.28	42.7	11.58	41.5	11.21	40.4	10.86	38.0	10.13	35.5	9.41
	2.8	2.0	49.6	13.30	47.4	12.59	45.0	11.89	43.9	11.52	42.7	11.17	40.0	10.38	36.7	9.41
	6.0	5.0	53.3	13.58	50.0	12.52	46.7	11.51	45.0	11.03	43.3	10.56	40.0	9.63	36.7	8.71
	7.0	6.0	53.3	13.14	50.0	12.14	46.7	11.18	45.0	10.70	43.3	10.23	40.0	9.30	36.7	8.41
	8.6	7.5	53.3	12.51	50.0	11.51	46.7	10.56	45.0	10.10	43.3	9.65	40.0	8.78	36.7	7.96
	11.2	10.0	53.3	11.30	50.0	10.41	46.7	9.57	45.0	9.16	43.3	8.75	40.0	7.98	36.7	7.23
	16.4	15.0	53.3	9.10	50.0	8.41	46.7	7.75	45.0	7.43	43.3	7.12	40.0	6.51	36.7	5.93

1. Capacity Ratio of Outdoor Unit (Standard-COP mode)

U-14ME1E81 (Heating)

Capacity Ratio 30-130%

TC: Total capacity (kW), PI: Power input (kW)

Combination(%) :Indoor/outdoor capacity ratio	Outdoor air temp.		Indoor air temp. : ℃CDB													
			15.0		17.0		19.0		20.0		21.0		23.0		25.0	
			TC	PI	TC	PI	TC	PI	TC	PI	TC	PI	TC	PI	TC	PI
	℃CDB	℃CWB	kW	kW	kW	kW	kW	kW	kW	kW	kW	kW	kW	kW	kW	kW
90%	-24.9	-25.0	32.6	10.67	30.8	10.07	29.0	9.48	28.1	9.18	27.2	8.89	25.4	8.30	23.5	7.74
	-19.8	-20.0	34.3	10.85	32.5	10.25	30.6	9.65	29.7	9.34	28.8	9.05	26.8	8.45	24.8	7.86
	-14.7	-15.0	36.4	11.09	34.5	10.49	32.6	9.87	31.6	9.57	30.6	9.26	28.6	8.66	26.5	8.05
	-9.6	-10.0	39.0	11.43	37.0	10.81	35.0	10.19	34.0	9.87	32.9	9.56	30.8	8.92	28.6	8.29
	-4.4	-5.0	42.5	11.89	40.4	11.26	38.3	10.60	37.2	10.27	36.0	9.94	33.7	9.29	31.4	8.62
	-1.8	-2.5	44.7	12.19	42.5	11.52	40.3	10.86	39.1	10.53	37.9	10.19	35.6	9.51	33.0	8.81
	0.8	0.0	47.3	12.52	45.0	11.84	42.0	10.94	40.5	10.49	39.0	10.06	36.0	9.21	33.0	8.41
	2.8	2.0	48.0	12.20	45.0	11.31	42.0	10.46	40.5	10.05	39.0	9.64	36.0	8.86	33.0	8.08
	6.0	5.0	48.0	11.24	45.0	10.41	42.0	9.61	40.5	9.22	39.0	8.84	36.0	8.10	33.0	7.38
	7.0	6.0	48.0	10.82	45.0	10.03	42.0	9.27	40.5	8.89	39.0	8.53	36.0	7.81	33.0	7.13
	8.6	7.5	48.0	10.18	45.0	9.44	42.0	8.73	40.5	8.39	39.0	8.05	36.0	7.38	33.0	6.74
	11.2	10.0	48.0	9.16	45.0	8.51	42.0	7.88	40.5	7.58	39.0	7.27	36.0	6.68	33.0	6.11
	16.4	15.0	48.0	7.31	45.0	6.82	42.0	6.35	40.5	6.11	39.0	5.87	36.0	5.44	33.0	5.00

Combination(%) :Indoor/outdoor capacity ratio	Outdoor air temp.		Indoor air temp. : ℃CDB													
			15.0		17.0		19.0		20.0		21.0		23.0		25.0	
			TC	PI	TC	PI	TC	PI	TC	PI	TC	PI	TC	PI	TC	PI
	℃CDB	℃CWB	kW	kW	kW	kW	kW	kW	kW	kW	kW	kW	kW	kW	kW	kW
80%	-24.9	-25.0	32.9	10.25	31.1	9.72	29.3	9.17	28.4	8.91	27.4	8.65	25.5	8.12	23.6	7.60
	-19.8	-20.0	34.7	10.45	32.8	9.91	30.9	9.36	29.9	9.08	28.9	8.81	27.0	8.27	25.0	7.74
	-14.7	-15.0	36.8	10.72	34.8	10.17	32.9	9.60	31.8	9.31	30.8	9.03	28.7	8.46	26.6	7.91
	-9.6	-10.0	39.5	11.07	37.4	10.50	35.3	9.91	34.2	9.61	33.1	9.31	30.9	8.72	28.7	8.13
	-4.4	-5.0	42.7	11.45	40.0	10.67	37.4	9.91	36.0	9.54	34.7	9.18	32.0	8.47	29.3	7.79
	-1.8	-2.5	42.7	10.96	40.0	10.22	37.4	9.50	36.0	9.16	34.7	8.82	32.0	8.14	29.3	7.50
	0.8	0.0	42.7	10.44	40.0	9.76	37.4	9.07	36.0	8.74	34.7	8.41	32.0	7.77	29.3	7.14
	2.8	2.0	42.7	9.94	40.0	9.28	37.4	8.62	36.0	8.31	34.7	7.99	32.0	7.38	29.3	6.79
	6.0	5.0	42.7	9.02	40.0	8.43	37.4	7.85	36.0	7.56	34.7	7.29	32.0	6.73	29.3	6.20
	7.0	6.0	42.7	8.68	40.0	8.11	37.4	7.55	36.0	7.29	34.7	7.02	32.0	6.48	29.3	5.97
	8.6	7.5	42.7	8.14	40.0	7.62	37.4	7.10	36.0	6.86	34.7	6.60	32.0	6.12	29.3	5.64
	11.2	10.0	42.7	7.29	40.0	6.84	37.4	6.39	36.0	6.17	34.7	5.95	32.0	5.52	29.3	5.10
	16.4	15.0	42.7	5.77	40.0	5.44	37.4	5.11	36.0	4.95	34.7	4.79	32.0	4.47	29.3	4.16

Combination(%) :Indoor/outdoor capacity ratio	Outdoor air temp.		Indoor air temp. : ℃CDB													
			15.0		17.0		19.0		20.0		21.0		23.0		25.0	
			TC	PI	TC	PI	TC	PI	TC	PI	TC	PI	TC	PI	TC	PI
	℃CDB	℃CWB	kW	kW	kW	kW	kW	kW	kW	kW	kW	kW	kW	kW	kW	kW
70%	-24.9	-25.0	33.5	10.00	31.6	9.52	29.7	9.03	28.8	8.78	27.8	8.55	25.9	8.07	23.9	7.61
	-19.8	-20.0	35.3	10.24	33.4	9.73	31.4	9.22	30.4	8.98	29.4	8.72	27.4	8.23	25.2	7.74
	-14.7	-15.0	37.4	10.48	35.0	9.83	32.7	9.21	31.5	8.91	30.3	8.61	28.0	8.03	25.7	7.47
	-9.6	-10.0	37.4	9.87	35.0	9.27	32.7	8.69	31.5	8.40	30.3	8.12	28.0	7.58	25.7	7.04
	-4.4	-5.0	37.4	9.22	35.0	8.68	32.7	8.14	31.5	7.88	30.3	7.61	28.0	7.09	25.7	6.59
	-1.8	-2.5	37.4	8.80	35.0	8.27	32.7	7.76	31.5	7.51	30.3	7.27	28.0	6.77	25.7	6.30
	0.8	0.0	37.4	8.29	35.0	7.81	32.7	7.33	31.5	7.09	30.3	6.86	28.0	6.41	25.7	5.96
	2.8	2.0	37.4	7.85	35.0	7.40	32.7	6.96	31.5	6.73	30.3	6.52	28.0	6.08	25.7	5.66
	6.0	5.0	37.4	7.09	35.0	6.70	32.7	6.30	31.5	6.11	30.3	5.91	28.0	5.52	25.7	5.13
	7.0	6.0	37.4	6.82	35.0	6.43	32.7	6.06	31.5	5.86	30.3	5.68	28.0	5.31	25.7	4.93
	8.6	7.5	37.4	6.38	35.0	6.02	32.7	5.68	31.5	5.51	30.3	5.34	28.0	5.00	25.7	4.65
	11.2	10.0	37.4	5.68	35.0	5.39	32.7	5.09	31.5	4.95	30.3	4.80	28.0	4.52	25.7	4.22
	16.4	15.0	37.4	4.45	35.0	4.26	32.7	4.06	31.5	3.95	30.3	3.85	28.0	3.65	25.7	3.43

Combination(%) :Indoor/outdoor capacity ratio	Outdoor air temp.		Indoor air temp. : ℃CDB													
			15.0		17.0		19.0		20.0		21.0		23.0		25.0	
			TC	PI	TC	PI	TC	PI	TC	PI	TC	PI	TC	PI	TC	PI
	℃CDB	℃CWB	kW	kW	kW	kW	kW	kW	kW	kW	kW	kW	kW	kW	kW	kW
60%	-24.9	-25.0	32.0	9.05	30.0	8.59	28.0	8.15	27.0	7.94	26.0	7.73	24.0	7.30	22.0	6.89
	-19.8	-20.0	32.0	8.67	30.0	8.23	28.0	7.80	27.0	7.59	26.0	7.37	24.0	6.97	22.0	6.57
	-14.7	-15.0	32.0	8.27	30.0	7.85	28.0	7.44	27.0	7.23	26.0	7.03	24.0	6.63	22.0	6.24
	-9.6	-10.0	32.0	7.83	30.0	7.45	28.0	7.06	27.0	6.87	26.0	6.68	24.0	6.29	22.0	5.91
	-4.4	-5.0	32.0	7.21	30.0	6.86	28.0	6.51	27.0	6.33	26.0	6.16	24.0	5.82	22.0	5.49
	-1.8	-2.5	32.0	6.85	30.0	6.52	28.0	6.18	27.0	6.02	26.0	5.86	24.0	5.54	22.0	5.21
	0.8	0.0	32.0	6.44	30.0	6.13	28.0	5.83	27.0	5.68	26.0	5.53	24.0	5.22	22.0	4.92
	2.8	2.0	32.0	6.08	30.0	5.80	28.0	5.51	27.0	5.37	26.0	5.23	24.0	4.94	22.0	4.65
	6.0	5.0	32.0	5.46	30.0	5.21	28.0	4.96	27.0	4.84	26.0	4.71	24.0	4.44	22.0	4.18
	7.0	6.0	32.0	5.23	30.0	5.00	28.0	4.76	27.0	4.64	26.0	4.52	24.0	4.27	22.0	4.02
	8.6	7.5	32.0	4.88	30.0	4.68	28.0	4.46	27.0	4.35	26.0	4.25	24.0	4.02	22.0	3.80
	11.2	10.0	32.0	4.33	30.0	4.17	28.0	3.99	27.0	3.91	26.0	3.82	24.0	3.63	22.0	3.43
	16.4	15.0	32.0	3.92	30.0	3.73	28.0	3.54	27.0	3.45	26.0	3.35	24.0	3.17	22.0	2.97

1. Capacity Ratio of Outdoor Unit (Standard-COP mode)

U-14ME1E81 (Heating)

Capacity Ratio 30-130%

TC: Total capacity (kW), PI: Power input (kW)

Combination(%) :Indoor/outdoor capacity ratio	Outdoor air temp.		Indoor air temp. : ℃CDB													
			15.0		17.0		19.0		20.0		21.0		23.0		25.0	
			TC	PI	TC	PI	TC	PI	TC	PI	TC	PI	TC	PI	TC	PI
	℃CDB	℃CWB	kW	kW	kW	kW	kW	kW	kW	kW	kW	kW	kW	kW	kW	kW
50%	-24.9	-25.0	26.7	7.07	25.0	6.79	23.4	6.52	22.5	6.39	21.6	6.25	20.0	5.97	18.3	5.70
	-19.8	-20.0	26.7	6.82	25.0	6.54	23.4	6.26	22.5	6.13	21.6	5.99	20.0	5.71	18.3	5.45
	-14.7	-15.0	26.7	6.46	25.0	6.23	23.4	5.99	22.5	5.86	21.6	5.74	20.0	5.46	18.3	5.19
	-9.6	-10.0	26.7	6.05	25.0	5.82	23.4	5.61	22.5	5.49	21.6	5.38	20.0	5.15	18.3	4.91
	-4.4	-5.0	26.7	5.53	25.0	5.34	23.4	5.14	22.5	5.04	21.6	4.93	20.0	4.73	18.3	4.52
	-1.8	-2.5	26.7	5.23	25.0	5.05	23.4	4.87	22.5	4.77	21.6	4.68	20.0	4.48	18.3	4.28
	0.8	0.0	26.7	4.90	25.0	4.74	23.4	4.57	22.5	4.48	21.6	4.39	20.0	4.21	18.3	4.01
	2.8	2.0	26.7	4.61	25.0	4.46	23.4	4.30	22.5	4.22	21.6	4.14	20.0	3.95	18.3	3.73
	6.0	5.0	26.7	4.10	25.0	3.97	23.4	3.83	22.5	3.76	21.6	3.68	20.0	3.52	18.3	3.35
	7.0	6.0	26.7	3.92	25.0	3.80	23.4	3.67	22.5	3.61	21.6	3.53	20.0	3.38	18.3	3.23
	8.6	7.5	26.7	3.65	25.0	3.55	23.4	3.43	22.5	3.38	21.6	3.32	20.0	3.19	18.3	3.05
	11.2	10.0	26.7	3.41	25.0	3.26	23.4	3.10	22.5	3.03	21.6	2.99	20.0	2.88	18.3	2.77
	16.4	15.0	26.7	3.41	25.0	3.26	23.4	3.10	22.5	3.03	21.6	2.94	20.0	2.78	18.3	2.63

Combination(%) :Indoor/outdoor capacity ratio	Outdoor air temp.		Indoor air temp. : ℃CDB													
			15.0		17.0		19.0		20.0		21.0		23.0		25.0	
			TC	PI	TC	PI	TC	PI	TC	PI	TC	PI	TC	PI	TC	PI
	℃CDB	℃CWB	kW	kW	kW	kW	kW	kW	kW	kW	kW	kW	kW	kW	kW	kW
40%	-24.9	-25.0	21.3	5.51	20.0	5.36	18.7	5.19	18.0	5.10	17.3	5.03	16.0	4.86	14.7	4.69
	-19.8	-20.0	21.3	5.24	20.0	5.13	18.7	5.00	18.0	4.91	17.3	4.83	16.0	4.65	14.7	4.47
	-14.7	-15.0	21.3	4.95	20.0	4.84	18.7	4.72	18.0	4.65	17.3	4.59	16.0	4.44	14.7	4.26
	-9.6	-10.0	21.3	4.60	20.0	4.50	18.7	4.40	18.0	4.34	17.3	4.28	16.0	4.15	14.7	4.01
	-4.4	-5.0	21.3	4.18	20.0	4.10	18.7	4.01	18.0	3.96	17.3	3.91	16.0	3.79	14.7	3.67
	-1.8	-2.5	21.3	3.94	20.0	3.86	18.7	3.78	18.0	3.73	17.3	3.68	16.0	3.57	14.7	3.41
	0.8	0.0	21.3	3.67	20.0	3.61	18.7	3.52	18.0	3.47	17.3	3.40	16.0	3.28	14.7	3.15
	2.8	2.0	21.3	3.42	20.0	3.35	18.7	3.26	18.0	3.21	17.3	3.17	16.0	3.06	14.7	2.93
	6.0	5.0	21.3	3.00	20.0	2.95	18.7	2.89	18.0	2.86	17.3	2.81	16.0	2.74	14.7	2.64
	7.0	6.0	21.3	2.91	20.0	2.82	18.7	2.77	18.0	2.74	17.3	2.71	16.0	2.63	14.7	2.55
	8.6	7.5	21.3	2.91	20.0	2.78	18.7	2.66	18.0	2.60	17.3	2.55	16.0	2.48	14.7	2.42
	11.2	10.0	21.3	2.91	20.0	2.78	18.7	2.66	18.0	2.60	17.3	2.54	16.0	2.41	14.7	2.28
	16.4	15.0	21.3	2.91	20.0	2.78	18.7	2.66	18.0	2.60	17.3	2.54	16.0	2.41	14.7	2.28

Combination(%) :Indoor/outdoor capacity ratio	Outdoor air temp.		Indoor air temp. : ℃CDB													
			15.0		17.0		19.0		20.0		21.0		23.0		25.0	
			TC	PI	TC	PI	TC	PI	TC	PI	TC	PI	TC	PI	TC	PI
	℃CDB	℃CWB	kW	kW	kW	kW	kW	kW	kW	kW	kW	kW	kW	kW	kW	kW
30%	-24.9	-25.0	16.0	4.19	15.0	4.15	14.0	4.07	13.5	4.01	13.0	3.96	12.0	3.86	11.0	3.76
	-19.8	-20.0	16.0	3.99	15.0	3.95	14.0	3.89	13.5	3.85	13.0	3.81	12.0	3.69	11.0	3.58
	-14.7	-15.0	16.0	3.76	15.0	3.72	14.0	3.67	13.5	3.64	13.0	3.61	12.0	3.53	11.0	3.41
	-9.6	-10.0	16.0	3.48	15.0	3.45	14.0	3.41	13.5	3.38	13.0	3.36	12.0	3.28	11.0	3.20
	-4.4	-5.0	16.0	3.12	15.0	3.11	14.0	3.07	13.5	3.03	13.0	2.99	12.0	2.89	11.0	2.79
	-1.8	-2.5	16.0	2.91	15.0	2.87	14.0	2.81	13.5	2.79	13.0	2.75	12.0	2.68	11.0	2.59
	0.8	0.0	16.0	2.64	15.0	2.62	14.0	2.58	13.5	2.56	13.0	2.54	12.0	2.47	11.0	2.41
	2.8	2.0	16.0	2.44	15.0	2.42	14.0	2.40	13.5	2.38	13.0	2.36	12.0	2.31	11.0	2.26
	6.0	5.0	16.0	2.41	15.0	2.31	14.0	2.23	13.5	2.17	13.0	2.13	12.0	2.09	11.0	2.04
	7.0	6.0	16.0	2.41	15.0	2.31	14.0	2.23	13.5	2.17	13.0	2.13	12.0	2.03	11.0	1.98
	8.6	7.5	16.0	2.41	15.0	2.31	14.0	2.23	13.5	2.17	13.0	2.13	12.0	2.03	11.0	1.94
	11.2	10.0	16.0	2.41	15.0	2.31	14.0	2.23	13.5	2.17	13.0	2.13	12.0	2.03	11.0	1.94
	16.4	15.0	16.0	2.41	15.0	2.31	14.0	2.23	13.5	2.17	13.0	2.13	12.0	2.03	11.0	1.94

1. Capacity Ratio of Outdoor Unit (Standard-COP mode)

1-9. U-16ME1E81 (Cooling)

Capacity Ratio 30-130%

TC: Total capacity (kW), PI: Power input (kW)

Combination(%) :Indoor/outdoor capacity ratio	Outdoor air temp. ℃DB	Indoor air temp. :℃WB													
		16.0		17.0		18.0		19.0		20.0		21.0		22.0	
		TC	PI	TC	PI	TC	PI	TC	PI	TC	PI	TC	PI	TC	PI
		kW	kW	kW	kW	kW	kW	kW	kW	kW	kW	kW	kW	kW	kW
130%	-10.0	48.4	6.15	48.4	6.15	48.4	6.15	48.4	6.15	51.6	6.57	54.8	6.98	58.1	7.40
	-5.0	48.4	6.18	48.4	6.18	48.4	6.18	48.4	6.18	51.6	6.59	54.8	7.02	58.1	7.44
	0.0	48.4	6.22	48.4	6.22	48.4	6.22	48.4	6.22	51.6	6.65	54.8	7.09	58.1	7.52
	5.0	48.4	6.31	48.4	6.31	48.4	6.31	48.4	6.31	51.6	6.75	54.8	7.20	58.1	7.65
	10.0	48.4	6.49	48.4	6.49	48.4	6.49	48.4	6.49	51.6	6.97	54.8	7.45	58.1	7.92
	15.0	48.4	6.94	48.4	6.94	48.4	6.94	48.4	6.94	51.6	7.49	54.8	8.05	58.1	8.79
	20.0	48.4	8.44	48.4	8.44	48.4	8.44	48.4	8.44	51.6	9.26	54.8	10.14	58.1	11.07
	25.0	48.4	10.40	48.4	10.40	48.4	10.40	48.4	10.40	51.6	11.39	54.8	12.44	58.1	13.53
	30.0	48.4	12.53	48.4	12.53	48.4	12.53	48.4	12.53	51.6	13.71	54.8	14.94	58.1	16.24
	35.0	48.4	14.85	48.4	14.85	48.4	14.85	48.4	14.85	51.6	16.21	54.5	17.42	55.6	17.42
	40.0	48.4	17.34	48.4	17.34	48.4	17.34	48.4	17.34	49.5	17.42	50.5	17.42	51.6	17.42
	43.0	46.3	17.42	46.3	17.42	46.3	17.42	46.3	17.42	47.3	17.42	48.3	17.42	49.3	17.42

Combination(%) :Indoor/outdoor capacity ratio	Outdoor air temp. ℃DB	Indoor air temp. :℃WB													
		16.0		17.0		18.0		19.0		20.0		21.0		22.0	
		TC	PI	TC	PI	TC	PI	TC	PI	TC	PI	TC	PI	TC	PI
		kW	kW	kW	kW	kW	kW	kW	kW	kW	kW	kW	kW	kW	kW
120%	-10.0	45.4	5.75	47.3	6.00	47.3	6.00	47.3	6.00	50.4	6.41	53.6	6.82	56.7	7.22
	-5.0	45.4	5.76	47.3	6.03	47.3	6.03	47.3	6.03	50.4	6.45	53.6	6.85	56.7	7.26
	0.0	45.4	5.79	47.3	6.07	47.3	6.07	47.3	6.07	50.4	6.49	53.6	6.91	56.7	7.33
	5.0	45.4	5.83	47.3	6.15	47.3	6.15	47.3	6.15	50.4	6.58	53.6	7.02	56.7	7.46
	10.0	45.4	5.92	47.3	6.32	47.3	6.32	47.3	6.32	50.4	6.78	53.6	7.25	56.7	7.73
	15.0	45.4	6.18	47.3	6.74	47.3	6.74	47.3	6.74	50.4	7.28	53.6	7.83	56.7	8.44
	20.0	45.4	7.01	47.3	8.13	47.3	8.13	47.3	8.13	50.4	8.92	53.6	9.76	56.7	10.64
	25.0	45.4	8.74	47.3	10.04	47.3	10.04	47.3	10.04	50.4	10.99	53.6	11.98	56.7	13.04
	30.0	45.4	10.61	47.3	12.10	47.3	12.10	47.3	12.10	50.4	13.23	53.6	14.42	56.7	15.65
	35.0	45.4	12.68	47.3	14.35	47.3	14.35	47.3	14.35	50.4	15.66	53.6	17.04	55.2	17.42
	40.0	45.4	14.89	47.3	16.78	47.3	16.78	47.3	16.78	49.2	17.42	50.2	17.42	51.2	17.42
	43.0	45.4	16.31	46.0	17.42	46.0	17.42	46.0	17.42	47.0	17.42	48.0	17.42	49.0	17.42

Combination(%) :Indoor/outdoor capacity ratio	Outdoor air temp. ℃DB	Indoor air temp. :℃WB													
		16.0		17.0		18.0		19.0		20.0		21.0		22.0	
		TC	PI	TC	PI	TC	PI	TC	PI	TC	PI	TC	PI	TC	PI
		kW	kW	kW	kW	kW	kW	kW	kW	kW	kW	kW	kW	kW	kW
110%	-10.0	40.6	5.15	44.0	5.57	46.1	5.86	46.1	5.86	49.2	6.26	52.3	6.65	55.4	7.05
	-5.0	40.6	5.16	44.0	5.59	46.1	5.88	46.1	5.88	49.2	6.28	52.3	6.69	55.4	7.09
	0.0	40.6	5.17	44.0	5.61	46.1	5.92	46.1	5.92	49.2	6.32	52.3	6.74	55.4	7.16
	5.0	40.6	5.23	44.0	5.67	46.1	6.00	46.1	6.00	49.2	6.42	52.3	6.85	55.4	7.28
	10.0	40.6	5.31	44.0	5.78	46.1	6.16	46.1	6.16	49.2	6.61	52.3	7.06	55.4	7.52
	15.0	40.6	5.55	44.0	6.06	46.1	6.55	46.1	6.55	49.2	7.06	52.3	7.58	55.4	8.13
	20.0	40.6	6.31	44.0	7.01	46.1	7.85	46.1	7.85	49.2	8.60	52.3	9.39	55.4	10.22
	25.0	40.6	7.85	44.0	8.70	46.1	9.69	46.1	9.69	49.2	10.59	52.3	11.54	55.4	12.54
	30.0	40.6	9.53	44.0	10.53	46.1	11.68	46.1	11.68	49.2	12.77	52.3	13.90	55.4	15.08
	35.0	40.6	11.35	44.0	12.56	46.1	13.87	46.1	13.87	49.2	15.13	52.3	16.44	54.8	17.42
	40.0	40.6	13.32	44.0	14.73	46.1	16.21	46.1	16.21	48.8	17.42	49.9	17.42	50.9	17.42
	43.0	40.6	14.58	44.0	16.11	45.7	17.42	45.7	17.42	46.7	17.42	47.7	17.42	48.6	17.42

Combination(%) :Indoor/outdoor capacity ratio	Outdoor air temp. ℃DB	Indoor air temp. :℃WB													
		16.0		17.0		18.0		19.0		20.0		21.0		22.0	
		TC	PI	TC	PI	TC	PI	TC	PI	TC	PI	TC	PI	TC	PI
		kW	kW	kW	kW	kW	kW	kW	kW	kW	kW	kW	kW	kW	kW
100%	-10.0	36.0	4.57	39.0	4.94	42.0	5.33	45.0	5.72	48.0	6.10	51.0	6.49	54.0	6.87
	-5.0	36.0	4.57	39.0	4.96	42.0	5.35	45.0	5.74	48.0	6.12	51.0	6.51	54.0	6.91
	0.0	36.0	4.60	39.0	4.98	42.0	5.37	45.0	5.78	48.0	6.16	51.0	6.57	54.0	6.97
	5.0	36.0	4.64	39.0	5.04	42.0	5.44	45.0	5.84	48.0	6.26	51.0	6.66	54.0	7.08
	10.0	36.0	4.72	39.0	5.15	42.0	5.56	45.0	5.99	48.0	6.43	51.0	6.86	54.0	7.32
	15.0	36.0	4.93	39.0	5.40	42.0	5.87	45.0	6.37	48.0	6.86	51.0	7.36	54.0	7.88
	20.0	36.0	5.64	39.0	6.26	42.0	6.89	45.0	7.57	48.0	8.28	51.0	9.03	54.0	9.82
	25.0	36.0	7.01	39.0	7.75	42.0	8.52	45.0	9.34	48.0	10.21	51.0	11.11	54.0	12.06
	30.0	36.0	8.50	39.0	9.38	42.0	10.30	45.0	11.28	48.0	12.31	51.0	13.39	54.0	14.51
	35.0	36.0	10.10	39.0	11.15	42.0	12.25	45.0	13.40	48.0	14.61	51.0	15.85	54.0	17.15
	40.0	36.0	11.85	39.0	13.07	42.0	14.34	45.0	15.66	48.0	17.06	49.5	17.42	50.5	17.42
	43.0	36.0	12.96	39.0	14.28	42.0	15.68	45.0	17.13	46.4	17.42	47.3	17.42	48.3	17.42

1. Capacity Ratio of Outdoor Unit (Standard-COP mode)

U-16ME1E81 (Cooling)

Capacity Ratio 30-130%

TC: Total capacity (kW), PI: Power input (kW)

Combination(%) :Indoor/outdoor capacity ratio	Outdoor air temp. ℃DB	Indoor air temp. :℃WB													
		16.0		17.0		18.0		19.0		20.0		21.0		22.0	
		TC	PI	TC	PI	TC	PI	TC	PI	TC	PI	TC	PI	TC	PI
		kW	kW	kW	kW	kW	kW	kW	kW	kW	kW	kW	kW	kW	kW
90%	-10.0	32.4	4.10	35.1	4.45	37.8	4.80	40.5	5.13	43.2	5.48	45.9	5.83	48.6	6.18
	-5.0	32.4	4.11	35.1	4.46	37.8	4.81	40.5	5.16	43.2	5.51	45.9	5.86	48.6	6.20
	0.0	32.4	4.13	35.1	4.48	37.8	4.82	40.5	5.19	43.2	5.53	45.9	5.90	48.6	6.24
	5.0	32.4	4.15	35.1	4.52	37.8	4.88	40.5	5.24	43.2	5.60	45.9	5.96	48.6	6.32
	10.0	32.4	4.22	35.1	4.60	37.8	4.97	40.5	5.35	43.2	5.72	45.9	6.11	48.6	6.50
	15.0	32.4	4.38	35.1	4.78	37.8	5.20	40.5	5.61	43.2	6.04	45.9	6.47	48.6	6.91
	20.0	32.4	4.90	35.1	5.41	37.8	5.95	40.5	6.50	43.2	7.08	45.9	7.68	48.6	8.32
	25.0	32.4	6.14	35.1	6.74	37.8	7.38	40.5	8.05	43.2	8.76	45.9	9.50	48.6	10.26
	30.0	32.4	7.44	35.1	8.17	37.8	8.94	40.5	9.74	43.2	10.59	45.9	11.47	48.6	12.40
	35.0	32.4	8.84	35.1	9.73	37.8	10.64	40.5	11.59	43.2	12.58	45.9	13.63	48.6	14.70
	40.0	32.4	10.39	35.1	11.40	37.8	12.48	40.5	13.59	43.2	14.74	45.9	15.93	48.6	17.18
	43.0	32.4	11.35	35.1	12.48	37.8	13.64	40.5	14.85	43.2	16.11	45.9	17.41	46.8	17.42

Combination(%) :Indoor/outdoor capacity ratio	Outdoor air temp. ℃DB	Indoor air temp. :℃WB													
		16.0		17.0		18.0		19.0		20.0		21.0		22.0	
		TC	PI	TC	PI	TC	PI	TC	PI	TC	PI	TC	PI	TC	PI
		kW	kW	kW	kW	kW	kW	kW	kW	kW	kW	kW	kW	kW	kW
80%	-10.0	28.8	3.64	31.2	3.95	33.6	4.26	36.0	4.56	38.4	4.86	40.8	5.17	43.2	5.48
	-5.0	28.8	3.66	31.2	3.95	33.6	4.26	36.0	4.57	38.4	4.88	40.8	5.19	43.2	5.51
	0.0	28.8	3.66	31.2	3.97	33.6	4.29	36.0	4.60	38.4	4.90	40.8	5.21	43.2	5.53
	5.0	28.8	3.69	31.2	3.99	33.6	4.31	36.0	4.64	38.4	4.94	40.8	5.27	43.2	5.59
	10.0	28.8	3.73	31.2	4.06	33.6	4.38	36.0	4.70	38.4	5.04	40.8	5.37	43.2	5.71
	15.0	28.8	3.85	31.2	4.19	33.6	4.54	36.0	4.90	38.4	5.27	40.8	5.64	43.2	6.02
	20.0	28.8	4.22	31.2	4.65	33.6	5.08	36.0	5.53	38.4	5.99	40.8	6.47	43.2	6.98
	25.0	28.8	5.33	31.2	5.83	33.6	6.34	36.0	6.87	38.4	7.44	40.8	8.03	43.2	8.64
	30.0	28.8	6.46	31.2	7.06	33.6	7.68	36.0	8.33	38.4	9.02	40.8	9.73	43.2	10.47
	35.0	28.8	7.68	31.2	8.40	33.6	9.15	36.0	9.93	38.4	10.73	40.8	11.58	43.2	12.45
	40.0	28.8	9.02	31.2	9.86	33.6	10.75	36.0	11.64	38.4	12.60	40.8	13.56	43.2	14.58
	43.0	28.8	9.86	31.2	10.79	33.6	11.75	36.0	12.74	38.4	13.78	40.8	14.83	43.2	15.93

Combination(%) :Indoor/outdoor capacity ratio	Outdoor air temp. ℃DB	Indoor air temp. :℃WB													
		16.0		17.0		18.0		19.0		20.0		21.0		22.0	
		TC	PI	TC	PI	TC	PI	TC	PI	TC	PI	TC	PI	TC	PI
		kW	kW	kW	kW	kW	kW	kW	kW	kW	kW	kW	kW	kW	kW
70%	-10.0	25.2	3.19	27.3	3.46	29.4	3.73	31.5	3.99	33.6	4.26	35.7	4.53	37.8	4.80
	-5.0	25.2	3.19	27.3	3.46	29.4	3.73	31.5	3.99	33.6	4.26	35.7	4.53	37.8	4.81
	0.0	25.2	3.20	27.3	3.47	29.4	3.74	31.5	4.01	33.6	4.27	35.7	4.56	37.8	4.82
	5.0	25.2	3.22	27.3	3.48	29.4	3.77	31.5	4.03	33.6	4.31	35.7	4.58	37.8	4.86
	10.0	25.2	3.24	27.3	3.52	29.4	3.81	31.5	4.09	33.6	4.37	35.7	4.66	37.8	4.94
	15.0	25.2	3.32	27.3	3.62	29.4	3.93	31.5	4.22	33.6	4.53	35.7	4.84	37.8	5.16
	20.0	25.2	3.58	27.3	3.93	29.4	4.29	31.5	4.65	33.6	5.03	35.7	5.40	37.8	5.79
	25.0	25.2	4.60	27.3	4.98	29.4	5.40	31.5	5.82	33.6	6.26	35.7	6.71	37.8	7.20
	30.0	25.2	5.56	27.3	6.04	29.4	6.54	31.5	7.05	33.6	7.60	35.7	8.15	37.8	8.72
	35.0	25.2	6.61	27.3	7.18	29.4	7.79	31.5	8.40	33.6	9.05	35.7	9.72	37.8	10.40
	40.0	25.2	7.75	27.3	8.43	29.4	9.14	31.5	9.88	33.6	10.63	35.7	11.40	37.8	12.21
	43.0	25.2	8.47	27.3	9.22	29.4	10.00	31.5	10.80	33.6	11.62	35.7	12.48	37.8	13.35

Combination(%) :Indoor/outdoor capacity ratio	Outdoor air temp. ℃DB	Indoor air temp. :℃WB													
		16.0		17.0		18.0		19.0		20.0		21.0		22.0	
		TC	PI	TC	PI	TC	PI	TC	PI	TC	PI	TC	PI	TC	PI
		kW	kW	kW	kW	kW	kW	kW	kW	kW	kW	kW	kW	kW	kW
60%	-10.0	21.6	2.73	23.4	2.96	25.2	3.19	27.0	3.42	28.8	3.64	30.6	3.87	32.4	4.10
	-5.0	21.6	2.73	23.4	2.96	25.2	3.19	27.0	3.42	28.8	3.64	30.6	3.89	32.4	4.11
	0.0	21.6	2.73	23.4	2.97	25.2	3.20	27.0	3.43	28.8	3.66	30.6	3.90	32.4	4.13
	5.0	21.6	2.75	23.4	2.97	25.2	3.22	27.0	3.44	28.8	3.69	30.6	3.91	32.4	4.15
	10.0	21.6	2.77	23.4	3.00	25.2	3.24	27.0	3.48	28.8	3.73	30.6	3.97	32.4	4.21
	15.0	21.6	2.81	23.4	3.07	25.2	3.32	27.0	3.56	28.8	3.82	30.6	4.07	32.4	4.34
	20.0	21.6	2.99	23.4	3.27	25.2	3.55	27.0	3.85	28.8	4.14	30.6	4.44	32.4	4.74
	25.0	21.6	3.95	23.4	4.23	25.2	4.54	27.0	4.86	28.8	5.20	30.6	5.55	32.4	5.91
	30.0	21.6	4.73	23.4	5.11	25.2	5.49	27.0	5.90	28.8	6.31	30.6	6.73	32.4	7.17
	35.0	21.6	5.60	23.4	6.06	25.2	6.53	27.0	7.01	28.8	7.50	30.6	8.03	32.4	8.55
	40.0	21.6	6.55	23.4	7.10	25.2	7.66	27.0	8.23	28.8	8.82	30.6	9.42	32.4	10.05
	43.0	21.6	7.17	23.4	7.76	25.2	8.38	27.0	9.00	28.8	9.65	30.6	10.32	32.4	11.00

1. Capacity Ratio of Outdoor Unit (Standard-COP mode)

U-16ME1E81 (Cooling) **Capacity Ratio 30-130%**

TC: Total capacity (kW), PI: Power input (kW)

Combination(%) :Indoor/outdoor capacity ratio	Outdoor air temp. ℃DB	Indoor air temp. :℃WB													
		16.0		17.0		18.0		19.0		20.0		21.0		22.0	
		TC	PI	TC	PI	TC	PI	TC	PI	TC	PI	TC	PI	TC	PI
		kW	kW	kW	kW	kW	kW	kW	kW	kW	kW	kW	kW	kW	kW
50%	-10.0	18.0	2.28	19.5	2.47	21.0	2.65	22.5	2.84	24.0	3.04	25.5	3.23	27.0	3.42
	-5.0	18.0	2.28	19.5	2.47	21.0	2.65	22.5	2.85	24.0	3.04	25.5	3.23	27.0	3.42
	0.0	18.0	2.28	19.5	2.47	21.0	2.67	22.5	2.85	24.0	3.04	25.5	3.24	27.0	3.43
	5.0	18.0	2.29	19.5	2.48	21.0	2.67	22.5	2.87	24.0	3.06	25.5	3.26	27.0	3.44
	10.0	18.0	2.30	19.5	2.49	21.0	2.69	22.5	2.88	24.0	3.08	25.5	3.28	27.0	3.48
	15.0	18.0	2.33	19.5	2.53	21.0	2.73	22.5	2.93	24.0	3.14	25.5	3.35	27.0	3.55
	20.0	18.0	2.43	19.5	2.65	21.0	2.88	22.5	3.10	24.0	3.34	25.5	3.56	27.0	3.81
	25.0	18.0	3.00	19.5	3.32	21.0	3.64	22.5	3.98	24.0	4.26	25.5	4.52	27.0	4.77
	30.0	18.0	3.98	19.5	4.26	21.0	4.54	22.5	4.85	24.0	5.16	25.5	5.47	27.0	5.79
	35.0	18.0	4.69	19.5	5.04	21.0	5.39	22.5	5.75	24.0	6.12	25.5	6.50	27.0	6.89
	40.0	18.0	5.45	19.5	5.87	21.0	6.30	22.5	6.74	24.0	7.18	25.5	7.64	27.0	8.09
	43.0	18.0	5.95	19.5	6.42	21.0	6.89	22.5	7.37	24.0	7.85	25.5	8.36	27.0	8.87

Combination(%) :Indoor/outdoor capacity ratio	Outdoor air temp. ℃DB	Indoor air temp. :℃WB													
		16.0		17.0		18.0		19.0		20.0		21.0		22.0	
		TC	PI	TC	PI	TC	PI	TC	PI	TC	PI	TC	PI	TC	PI
		kW	kW	kW	kW	kW	kW	kW	kW	kW	kW	kW	kW	kW	kW
40%	-10.0	14.4	1.82	15.6	1.97	16.8	2.12	18.0	2.28	19.2	2.43	20.4	2.57	21.6	2.73
	-5.0	14.4	1.82	15.6	1.97	16.8	2.13	18.0	2.28	19.2	2.43	20.4	2.59	21.6	2.73
	0.0	14.4	1.82	15.6	1.97	16.8	2.13	18.0	2.28	19.2	2.44	20.4	2.59	21.6	2.73
	5.0	14.4	1.82	15.6	1.98	16.8	2.13	18.0	2.29	19.2	2.44	20.4	2.60	21.6	2.75
	10.0	14.4	1.84	15.6	1.98	16.8	2.14	18.0	2.29	19.2	2.45	20.4	2.61	21.6	2.76
	15.0	14.4	1.85	15.6	2.01	16.8	2.17	18.0	2.32	19.2	2.48	20.4	2.64	21.6	2.80
	20.0	14.4	1.90	15.6	2.08	16.8	2.24	18.0	2.41	19.2	2.59	20.4	2.76	21.6	2.93
	25.0	14.4	2.21	15.6	2.43	16.8	2.65	18.0	2.88	19.2	3.11	20.4	3.34	21.6	3.58
	30.0	14.4	3.30	15.6	3.50	16.8	3.70	18.0	3.91	19.2	4.13	20.4	4.34	21.6	4.57
	35.0	14.4	3.85	15.6	4.10	16.8	4.36	18.0	4.61	19.2	4.88	20.4	5.15	21.6	5.43
	40.0	14.4	4.45	15.6	4.76	16.8	5.07	18.0	5.37	19.2	5.70	20.4	6.02	21.6	6.35
	43.0	14.4	4.84	15.6	5.17	16.8	5.52	18.0	5.87	19.2	6.22	20.4	6.58	21.6	6.94

Combination(%) :Indoor/outdoor capacity ratio	Outdoor air temp. ℃DB	Indoor air temp. :℃WB													
		16.0		17.0		18.0		19.0		20.0		21.0		22.0	
		TC	PI	TC	PI	TC	PI	TC	PI	TC	PI	TC	PI	TC	PI
		kW	kW	kW	kW	kW	kW	kW	kW	kW	kW	kW	kW	kW	kW
30%	-10.0	10.8	1.37	11.7	1.47	12.6	1.59	13.5	1.70	14.4	1.82	15.3	1.93	16.2	2.05
	-5.0	10.8	1.37	11.7	1.47	12.6	1.59	13.5	1.70	14.4	1.82	15.3	1.93	16.2	2.05
	0.0	10.8	1.37	11.7	1.49	12.6	1.59	13.5	1.72	14.4	1.82	15.3	1.94	16.2	2.05
	5.0	10.8	1.37	11.7	1.49	12.6	1.59	13.5	1.72	14.4	1.82	15.3	1.94	16.2	2.05
	10.0	10.8	1.37	11.7	1.49	12.6	1.61	13.5	1.72	14.4	1.84	15.3	1.94	16.2	2.06
	15.0	10.8	1.38	11.7	1.50	12.6	1.61	13.5	1.73	14.4	1.85	15.3	1.97	16.2	2.08
	20.0	10.8	1.41	11.7	1.53	12.6	1.65	13.5	1.77	14.4	1.89	15.3	2.01	16.2	2.14
	25.0	10.8	1.54	11.7	1.69	12.6	1.82	13.5	1.97	14.4	2.12	15.3	2.28	16.2	2.43
	30.0	10.8	2.68	11.7	2.81	12.6	2.95	13.5	3.08	14.4	3.23	15.3	3.36	16.2	3.51
	35.0	10.8	3.08	11.7	3.26	12.6	3.42	13.5	3.59	14.4	3.77	15.3	3.95	16.2	4.13
	40.0	10.8	3.52	11.7	3.73	12.6	3.94	13.5	4.15	14.4	4.37	15.3	4.58	16.2	4.80
	43.0	10.8	3.81	11.7	4.03	12.6	4.27	13.5	4.50	14.4	4.74	15.3	4.98	16.2	5.23

1. Capacity Ratio of Outdoor Unit (Standard-COP mode)

1-10. U-16ME1E81 (Heating)

Capacity Ratio 30-130%

TC: Total capacity (kW), PI: Power input (kW)

Combination(%) :Indoor/outdoor capacity ratio	Outdoor air temp.		Indoor air temp. : °CDB													
			15.0		17.0		19.0		20.0		21.0		23.0		25.0	
			TC	PI	TC	PI	TC	PI	TC	PI	TC	PI	TC	PI	TC	PI
	°CDB	°CWB	kW	kW	kW	kW	kW	kW	kW	kW	kW	kW	kW	kW	kW	kW
130%	-24.9	-25.0	34.5	14.08	32.7	13.16	30.9	12.25	30.0	11.80	30.0	11.80	30.0	11.80	30.0	11.80
	-19.8	-20.0	36.2	14.17	34.4	13.26	32.6	12.36	31.6	11.92	31.6	11.92	31.6	11.92	31.6	11.92
	-14.7	-15.0	38.4	14.33	36.6	13.44	34.7	12.55	33.7	12.12	33.7	12.12	33.7	12.12	33.7	12.12
	-9.6	-10.0	41.2	14.61	39.3	13.73	37.3	12.86	36.3	12.42	36.3	12.42	36.3	12.42	36.3	12.42
	-4.4	-5.0	45.0	15.09	43.0	14.22	41.0	13.35	39.9	12.91	39.9	12.91	39.9	12.91	39.9	12.91
	-1.8	-2.5	47.5	15.43	45.4	14.56	43.3	13.69	42.2	13.26	42.2	13.26	42.2	13.26	42.2	13.26
	0.8	0.0	50.4	15.85	48.3	14.98	46.2	14.11	45.0	13.66	45.0	13.66	45.0	13.66	45.0	13.66
	2.8	2.0	53.3	16.25	51.1	15.37	48.9	14.50	47.7	14.05	47.7	14.05	47.7	14.05	47.7	14.05
	6.0	5.0	58.3	16.90	56.2	16.09	53.9	15.26	52.8	14.83	52.8	14.83	52.8	14.83	52.8	14.83
	7.0	6.0	59.9	16.90	58.4	16.43	55.8	15.47	53.8	14.74	53.8	14.74	53.8	14.74	53.8	14.74
	8.6	7.5	62.4	16.90	59.7	16.09	55.8	14.68	53.8	14.01	53.8	14.01	53.8	14.01	53.8	14.01
	11.2	10.0	63.7	16.12	59.7	14.81	55.8	13.49	53.8	12.86	53.8	12.86	53.8	12.86	53.8	12.86
	16.4	15.0	63.7	13.20	59.7	12.08	55.8	11.02	53.8	10.52	53.8	10.52	53.8	10.52	53.8	10.52

Combination(%) :Indoor/outdoor capacity ratio	Outdoor air temp.		Indoor air temp. : °CDB													
			15.0		17.0		19.0		20.0		21.0		23.0		25.0	
			TC	PI	TC	PI	TC	PI	TC	PI	TC	PI	TC	PI	TC	PI
	°CDB	°CWB	kW	kW	kW	kW	kW	kW	kW	kW	kW	kW	kW	kW	kW	kW
120%	-24.9	-25.0	34.5	13.87	32.8	12.97	31.0	12.09	30.0	11.66	30.0	11.66	30.0	11.66	30.0	11.66
	-19.8	-20.0	36.3	13.96	34.5	13.08	32.7	12.22	31.7	11.78	31.7	11.78	31.7	11.78	31.7	11.78
	-14.7	-15.0	38.5	14.14	36.7	13.27	34.7	12.42	33.7	11.99	33.7	11.99	33.7	11.99	33.7	11.99
	-9.6	-10.0	41.3	14.43	39.4	13.57	37.4	12.73	36.4	12.30	36.4	12.30	36.4	12.30	36.4	12.30
	-4.4	-5.0	45.1	14.92	43.1	14.08	41.0	13.22	40.0	12.79	40.0	12.79	40.0	12.79	40.0	12.79
	-1.8	-2.5	47.6	15.28	45.5	14.42	43.4	13.56	42.3	13.13	42.3	13.13	42.3	13.13	42.3	13.13
	0.8	0.0	50.6	15.69	48.4	14.83	46.2	13.96	45.0	13.53	45.0	13.53	45.0	13.53	45.0	13.53
	2.8	2.0	53.4	16.08	51.2	15.22	48.9	14.35	47.7	13.91	47.7	13.91	47.7	13.91	47.7	13.91
	6.0	5.0	58.5	16.77	56.3	15.95	53.9	15.12	52.5	14.61	52.5	14.61	52.5	14.61	51.4	13.38
	7.0	6.0	60.3	16.90	58.4	16.26	54.5	14.81	52.5	14.13	52.5	14.13	52.5	14.13	51.4	13.01
	8.6	7.5	62.2	16.81	58.4	15.41	54.5	14.09	52.5	13.46	52.5	13.46	52.5	13.46	51.4	12.35
	11.2	10.0	62.2	15.44	58.4	14.14	54.5	12.90	52.5	12.30	52.5	12.30	52.5	12.30	51.4	11.22
	16.4	15.0	62.2	12.56	58.4	11.52	54.5	10.52	52.5	10.05	52.5	10.05	52.5	10.05	51.4	9.19

Combination(%) :Indoor/outdoor capacity ratio	Outdoor air temp.		Indoor air temp. : °CDB													
			15.0		17.0		19.0		20.0		21.0		23.0		25.0	
			TC	PI	TC	PI	TC	PI	TC	PI	TC	PI	TC	PI	TC	PI
	°CDB	°CWB	kW	kW	kW	kW	kW	kW	kW	kW	kW	kW	kW	kW	kW	kW
110%	-24.9	-25.0	34.6	13.65	32.8	12.79	31.0	11.95	30.1	11.52	30.1	11.52	30.0	11.18	27.8	10.28
	-19.8	-20.0	36.4	13.77	34.6	12.91	32.7	12.06	31.8	11.65	31.8	11.65	31.7	11.32	29.4	10.44
	-14.7	-15.0	38.6	13.96	36.7	13.12	34.8	12.27	33.8	11.86	33.8	11.86	33.8	11.86	31.5	10.66
	-9.6	-10.0	41.4	14.27	39.5	13.43	37.5	12.58	36.4	12.17	36.4	12.17	36.4	12.17	34.1	11.00
	-4.4	-5.0	45.3	14.77	43.2	13.94	41.1	13.09	40.0	12.68	40.0	12.68	40.0	12.68	37.6	11.49
	-1.8	-2.5	47.7	15.12	45.6	14.27	43.4	13.43	42.3	13.00	42.3	13.00	42.3	13.00	39.9	11.82
	0.8	0.0	50.6	15.54	48.5	14.68	46.2	13.83	45.1	13.39	45.1	13.39	45.1	13.39	42.7	12.22
	2.8	2.0	53.4	15.91	51.2	15.07	48.9	14.20	47.6	13.77	47.6	13.77	47.6	13.77	45.3	12.62
	6.0	5.0	58.6	16.61	56.3	15.80	53.2	14.66	51.3	13.99	51.3	13.99	50.1	13.20	46.0	11.91
	7.0	6.0	60.6	16.90	57.0	15.52	53.2	14.18	51.3	13.55	51.3	13.55	50.1	12.82	46.0	11.57
	8.6	7.5	60.8	16.04	57.0	14.74	53.2	13.52	51.3	12.94	51.3	12.94	50.1	12.18	46.0	10.96
	11.2	10.0	60.8	14.72	57.0	13.49	53.2	12.32	51.3	11.75	51.3	11.75	50.1	11.06	46.0	9.97
	16.4	15.0	60.8	11.93	57.0	10.96	53.2	10.04	51.3	9.59	51.3	9.59	50.1	9.05	46.0	8.18

Combination(%) :Indoor/outdoor capacity ratio	Outdoor air temp.		Indoor air temp. : °CDB													
			15.0		17.0		19.0		20.0		21.0		23.0		25.0	
			TC	PI	TC	PI	TC	PI	TC	PI	TC	PI	TC	PI	TC	PI
	°CDB	°CWB	kW	kW	kW	kW	kW	kW	kW	kW	kW	kW	kW	kW	kW	kW
100%	-24.9	-25.0	34.7	13.46	32.9	12.61	31.1	11.78	30.1	11.38	29.2	10.96	27.3	10.15	25.3	9.36
	-19.8	-20.0	36.5	13.57	34.7	12.75	32.8	11.92	31.8	11.52	30.8	11.10	28.8	10.30	26.8	9.50
	-14.7	-15.0	38.7	13.78	36.8	12.95	34.8	12.13	33.8	11.73	32.8	11.32	30.8	10.50	28.6	9.71
	-9.6	-10.0	41.5	14.09	39.6	13.29	37.5	12.47	36.5	12.05	35.4	11.65	33.2	10.83	31.0	10.01
	-4.4	-5.0	45.4	14.61	43.3	13.79	41.1	12.96	40.0	12.55	38.9	12.13	36.6	11.30	34.2	10.45
	-1.8	-2.5	47.8	14.96	45.7	14.13	43.5	13.30	42.3	12.87	41.2	12.45	38.8	11.60	36.3	10.74
	0.8	0.0	50.7	15.38	48.5	14.53	46.2	13.69	45.0	13.26	43.8	12.83	41.3	11.96	38.7	11.10
	2.8	2.0	53.5	15.76	51.2	14.91	48.8	14.05	47.6	13.62	46.4	13.20	43.8	12.34	40.8	11.34
	6.0	5.0	58.6	16.46	55.6	15.34	51.9	14.03	50.0	13.40	48.2	12.79	44.5	11.64	40.8	10.53
	7.0	6.0	59.3	16.15	55.6	14.83	51.9	13.59	50.0	13.00	48.2	12.43	44.5	11.31	40.8	10.21
	8.6	7.5	59.3	15.31	55.6	14.12	51.9	12.96	50.0	12.39	48.2	11.82	44.5	10.71	40.8	9.66
	11.2	10.0	59.3	14.00	55.6	12.84	51.9	11.75	50.0	11.23	48.2	10.73	44.5	9.74	40.8	8.79
	16.4	15.0	59.3	11.32	55.6	10.41	51.9	9.56	50.0	9.14	48.2	8.74	44.5	7.96	40.8	7.23

1. Capacity Ratio of Outdoor Unit (Standard-COP mode)

U-16ME1E81 (Heating)

Capacity Ratio 30-130%

TC: Total capacity (kW), PI: Power input (kW)

Combination(%) :Indoor/outdoor capacity ratio	Outdoor air temp.		Indoor air temp. : ℃CDB													
			15.0		17.0		19.0		20.0		21.0		23.0		25.0	
			TC	PI	TC	PI	TC	PI	TC	PI	TC	PI	TC	PI	TC	PI
	℃CDB	℃CWB	kW	kW	kW	kW	kW	kW	kW	kW	kW	kW	kW	kW	kW	kW
90%	-24.9	-25.0	35.0	12.70	33.1	11.96	31.3	11.22	30.3	10.84	29.3	10.48	27.4	9.75	25.4	9.04
	-19.8	-20.0	36.8	12.87	34.9	12.13	33.0	11.38	32.0	11.01	31.0	10.65	28.9	9.91	26.8	9.18
	-14.7	-15.0	39.1	13.12	37.1	12.38	35.1	11.62	34.0	11.25	33.0	10.87	30.8	10.13	28.7	9.40
	-9.6	-10.0	41.9	13.48	39.9	12.73	37.7	11.97	36.7	11.58	35.5	11.21	33.3	10.44	31.0	9.69
	-4.4	-5.0	45.7	14.01	43.5	13.23	41.3	12.47	40.1	12.06	39.0	11.67	36.6	10.88	34.1	10.10
	-1.8	-2.5	48.2	14.35	45.9	13.57	43.6	12.78	42.3	12.38	41.1	11.97	38.6	11.17	36.0	10.36
	0.8	0.0	51.0	14.74	48.6	13.95	46.2	13.14	45.0	12.73	43.4	12.19	40.0	11.12	36.7	10.10
	2.8	2.0	53.4	14.98	50.0	13.81	46.7	12.70	45.0	12.17	43.4	11.65	40.0	10.65	36.7	9.70
	6.0	5.0	53.4	13.74	50.0	12.74	46.7	11.75	45.0	11.26	43.4	10.78	40.0	9.84	36.7	8.93
	7.0	6.0	53.4	13.34	50.0	12.32	46.7	11.34	45.0	10.87	43.4	10.40	40.0	9.49	36.7	8.63
	8.6	7.5	53.4	12.57	50.0	11.61	46.7	10.70	45.0	10.26	43.4	9.82	40.0	8.97	36.7	8.16
	11.2	10.0	53.4	11.34	50.0	10.49	46.7	9.67	45.0	9.28	43.4	8.89	40.0	8.14	36.7	7.42
	16.4	15.0	53.4	9.09	50.0	8.44	46.7	7.81	45.0	7.51	43.4	7.22	40.0	6.63	36.7	6.07

Combination(%) :Indoor/outdoor capacity ratio	Outdoor air temp.		Indoor air temp. : ℃CDB													
			15.0		17.0		19.0		20.0		21.0		23.0		25.0	
			TC	PI	TC	PI	TC	PI	TC	PI	TC	PI	TC	PI	TC	PI
	℃CDB	℃CWB	kW	kW	kW	kW	kW	kW	kW	kW	kW	kW	kW	kW	kW	kW
80%	-24.9	-25.0	35.3	12.06	33.4	11.40	31.5	10.73	30.5	10.40	29.5	10.08	27.5	9.43	25.4	8.78
	-19.8	-20.0	37.2	12.27	35.2	11.60	33.2	10.92	32.2	10.58	31.1	10.24	29.0	9.58	26.9	8.93
	-14.7	-15.0	39.5	12.56	37.4	11.87	35.3	11.18	34.2	10.84	33.1	10.49	30.9	9.82	28.7	9.14
	-9.6	-10.0	42.3	12.95	40.2	12.23	37.9	11.53	36.8	11.18	35.7	10.83	33.3	10.11	31.0	9.41
	-4.4	-5.0	46.1	13.48	43.8	12.74	41.4	12.01	40.0	11.56	38.5	11.09	35.6	10.19	32.6	9.32
	-1.8	-2.5	47.4	13.38	44.5	12.43	41.5	11.51	40.0	11.05	38.5	10.62	35.6	9.76	32.6	8.94
	0.8	0.0	47.4	12.70	44.5	11.82	41.5	10.96	40.0	10.56	38.5	10.14	35.6	9.35	32.6	8.58
	2.8	2.0	47.4	12.16	44.5	11.34	41.5	10.50	40.0	10.10	38.5	9.70	35.6	8.93	32.6	8.18
	6.0	5.0	47.4	11.09	44.5	10.32	41.5	9.58	40.0	9.22	38.5	8.85	35.6	8.15	32.6	7.48
	7.0	6.0	47.4	10.67	44.5	9.93	41.5	9.23	40.0	8.88	38.5	8.54	35.6	7.87	32.6	7.22
	8.6	7.5	47.4	10.04	44.5	9.35	41.5	8.68	40.0	8.36	38.5	8.05	35.6	7.42	32.6	6.81
	11.2	10.0	47.4	9.00	44.5	8.41	41.5	7.83	40.0	7.54	38.5	7.27	35.6	6.72	32.6	6.19
	16.4	15.0	47.4	7.15	44.5	6.72	41.5	6.29	40.0	6.07	38.5	5.86	35.6	5.46	32.6	5.06

Combination(%) :Indoor/outdoor capacity ratio	Outdoor air temp.		Indoor air temp. : ℃CDB													
			15.0		17.0		19.0		20.0		21.0		23.0		25.0	
			TC	PI	TC	PI	TC	PI	TC	PI	TC	PI	TC	PI	TC	PI
	℃CDB	℃CWB	kW	kW	kW	kW	kW	kW	kW	kW	kW	kW	kW	kW	kW	kW
70%	-24.9	-25.0	35.8	11.58	33.8	10.99	31.8	10.39	30.8	10.10	29.8	9.80	27.7	9.22	25.6	8.65
	-19.8	-20.0	37.7	11.82	35.7	11.22	33.6	10.60	32.5	10.30	31.4	10.00	29.3	9.39	27.1	8.80
	-14.7	-15.0	40.0	12.13	37.9	11.51	35.7	10.87	34.6	10.56	33.4	10.24	31.1	9.59	28.5	8.88
	-9.6	-10.0	41.5	11.99	38.9	11.22	36.3	10.47	35.0	10.10	33.7	9.74	31.1	9.04	28.5	8.36
	-4.4	-5.0	41.5	11.14	38.9	10.45	36.3	9.76	35.0	9.43	33.7	9.10	31.1	8.45	28.5	7.83
	-1.8	-2.5	41.5	10.71	38.9	10.05	36.3	9.39	35.0	9.07	33.7	8.75	31.1	8.13	28.5	7.51
	0.8	0.0	41.5	10.14	38.9	9.50	36.3	8.89	35.0	8.58	33.7	8.28	31.1	7.70	28.5	7.12
	2.8	2.0	41.5	9.61	38.9	9.02	36.3	8.44	35.0	8.15	33.7	7.87	31.1	7.32	28.5	6.77
	6.0	5.0	41.5	8.71	38.9	8.18	36.3	7.67	35.0	7.41	33.7	7.16	31.1	6.67	28.5	6.18
	7.0	6.0	41.5	8.36	38.9	7.87	36.3	7.37	35.0	7.14	33.7	6.89	31.1	6.42	28.5	5.95
	8.6	7.5	41.5	7.84	38.9	7.38	36.3	6.93	35.0	6.71	33.7	6.49	31.1	6.06	28.5	5.62
	11.2	10.0	41.5	7.01	38.9	6.62	36.3	6.23	35.0	6.03	33.7	5.85	31.1	5.47	28.5	5.10
	16.4	15.0	41.5	5.51	38.9	5.25	36.3	4.98	35.0	4.84	33.7	4.71	31.1	4.43	28.5	4.16

Combination(%) :Indoor/outdoor capacity ratio	Outdoor air temp.		Indoor air temp. : ℃CDB													
			15.0		17.0		19.0		20.0		21.0		23.0		25.0	
			TC	PI	TC	PI	TC	PI	TC	PI	TC	PI	TC	PI	TC	PI
	℃CDB	℃CWB	kW	kW	kW	kW	kW	kW	kW	kW	kW	kW	kW	kW	kW	kW
60%	-24.9	-25.0	35.6	10.93	33.4	10.34	31.1	9.75	30.0	9.46	28.9	9.18	26.7	8.63	24.5	8.11
	-19.8	-20.0	35.6	10.44	33.4	9.87	31.1	9.31	30.0	9.04	28.9	8.76	26.7	8.24	24.5	7.72
	-14.7	-15.0	35.6	9.93	33.4	9.40	31.1	8.87	30.0	8.61	28.9	8.35	26.7	7.84	24.5	7.35
	-9.6	-10.0	35.6	9.43	33.4	8.92	31.1	8.41	30.0	8.16	28.9	7.92	26.7	7.44	24.5	6.96
	-4.4	-5.0	35.6	8.74	33.4	8.28	31.1	7.81	30.0	7.59	28.9	7.37	26.7	6.93	24.5	6.50
	-1.8	-2.5	35.6	8.31	33.4	7.88	31.1	7.45	30.0	7.23	28.9	7.02	26.7	6.60	24.5	6.19
	0.8	0.0	35.6	7.83	33.4	7.42	31.1	7.02	30.0	6.83	28.9	6.63	26.7	6.24	24.5	5.85
	2.8	2.0	35.6	7.41	33.4	7.03	31.1	6.66	30.0	6.47	28.9	6.29	26.7	5.93	24.5	5.55
	6.0	5.0	35.6	6.67	33.4	6.34	31.1	6.02	30.0	5.86	28.9	5.69	26.7	5.36	24.5	5.02
	7.0	6.0	35.6	6.40	33.4	6.10	31.1	5.79	30.0	5.63	28.9	5.47	26.7	5.16	24.5	4.84
	8.6	7.5	35.6	5.98	33.4	5.71	31.1	5.43	30.0	5.29	28.9	5.15	26.7	4.86	24.5	4.58
	11.2	10.0	35.6	5.33	33.4	5.10	31.1	4.88	30.0	4.76	28.9	4.63	26.7	4.39	24.5	4.15
	16.4	15.0	35.6	4.58	33.4	4.37	31.1	4.15	30.0	4.03	28.9	3.93	26.7	3.71	24.5	3.48

1. Capacity Ratio of Outdoor Unit (Standard-COP mode)

U-16ME1E81 (Heating)

Capacity Ratio 30-130%

TC: Total capacity (kW), PI: Power input (kW)

Combination(%) :Indoor/outdoor capacity ratio	Outdoor air temp.		Indoor air temp. : °CDB													
			15.0		17.0		19.0		20.0		21.0		23.0		25.0	
			TC	PI	TC	PI	TC	PI	TC	PI	TC	PI	TC	PI	TC	PI
	°CDB	°CWB	kW	kW	kW	kW	kW	kW	kW	kW	kW	kW	kW	kW	kW	kW
50%	-24.9	-25.0	29.7	8.40	27.8	8.05	26.0	7.68	25.0	7.51	24.1	7.33	22.2	6.99	20.4	6.66
	-19.8	-20.0	29.7	8.09	27.8	7.74	26.0	7.38	25.0	7.22	24.1	7.03	22.2	6.70	20.4	6.36
	-14.7	-15.0	29.7	7.72	27.8	7.41	26.0	7.07	25.0	6.90	24.1	6.73	22.2	6.40	20.4	6.07
	-9.6	-10.0	29.7	7.23	27.8	6.94	26.0	6.64	25.0	6.50	24.1	6.36	22.2	6.06	20.4	5.76
	-4.4	-5.0	29.7	6.64	27.8	6.38	26.0	6.12	25.0	5.98	24.1	5.85	22.2	5.58	20.4	5.30
	-1.8	-2.5	29.7	6.29	27.8	6.06	26.0	5.81	25.0	5.68	24.1	5.56	22.2	5.30	20.4	5.04
	0.8	0.0	29.7	5.92	27.8	5.69	26.0	5.46	25.0	5.36	24.1	5.24	22.2	4.99	20.4	4.76
	2.8	2.0	29.7	5.58	27.8	5.37	26.0	5.16	25.0	5.06	24.1	4.95	22.2	4.72	20.4	4.47
	6.0	5.0	29.7	4.99	27.8	4.82	26.0	4.63	25.0	4.54	24.1	4.43	22.2	4.24	20.4	4.02
	7.0	6.0	29.7	4.78	27.8	4.62	26.0	4.45	25.0	4.36	24.1	4.26	22.2	4.07	20.4	3.87
	8.6	7.5	29.7	4.46	27.8	4.32	26.0	4.17	25.0	4.10	24.1	4.00	22.2	3.85	20.4	3.67
	11.2	10.0	29.7	4.00	27.8	3.85	26.0	3.73	25.0	3.68	24.1	3.61	22.2	3.47	20.4	3.33
	16.4	15.0	29.7	4.00	27.8	3.82	26.0	3.64	25.0	3.55	24.1	3.46	22.2	3.28	20.4	3.09

Combination(%) :Indoor/outdoor capacity ratio	Outdoor air temp.		Indoor air temp. : °CDB													
			15.0		17.0		19.0		20.0		21.0		23.0		25.0	
			TC	PI	TC	PI	TC	PI	TC	PI	TC	PI	TC	PI	TC	PI
	°CDB	°CWB	kW	kW	kW	kW	kW	kW	kW	kW	kW	kW	kW	kW	kW	kW
40%	-24.9	-25.0	23.7	6.47	22.2	6.28	20.8	6.06	20.0	5.95	19.3	5.85	17.8	5.64	16.3	5.43
	-19.8	-20.0	23.7	6.18	22.2	6.02	20.8	5.84	20.0	5.73	19.3	5.63	17.8	5.41	16.3	5.20
	-14.7	-15.0	23.7	5.84	22.2	5.69	20.8	5.54	20.0	5.45	19.3	5.37	17.8	5.19	16.3	4.97
	-9.6	-10.0	23.7	5.45	22.2	5.32	20.8	5.17	20.0	5.10	19.3	5.02	17.8	4.85	16.3	4.68
	-4.4	-5.0	23.7	4.97	22.2	4.85	20.8	4.73	20.0	4.67	19.3	4.60	17.8	4.45	16.3	4.29
	-1.8	-2.5	23.7	4.69	22.2	4.59	20.8	4.47	20.0	4.41	19.3	4.34	17.8	4.21	16.3	4.06
	0.8	0.0	23.7	4.38	22.2	4.29	20.8	4.19	20.0	4.13	19.3	4.08	17.8	3.93	16.3	3.74
	2.8	2.0	23.7	4.12	22.2	4.03	20.8	3.93	20.0	3.86	19.3	3.80	17.8	3.65	16.3	3.51
	6.0	5.0	23.7	3.64	22.2	3.56	20.8	3.48	20.0	3.43	19.3	3.39	17.8	3.29	16.3	3.16
	7.0	6.0	23.7	3.48	22.2	3.42	20.8	3.34	20.0	3.30	19.3	3.26	17.8	3.16	16.3	3.06
	8.6	7.5	23.7	3.42	22.2	3.28	20.8	3.15	20.0	3.11	19.3	3.07	17.8	2.99	16.3	2.90
	11.2	10.0	23.7	3.42	22.2	3.28	20.8	3.12	20.0	3.06	19.3	2.98	17.8	2.83	16.3	2.69
	16.4	15.0	23.7	3.42	22.2	3.28	20.8	3.12	20.0	3.06	19.3	2.98	17.8	2.83	16.3	2.69

Combination(%) :Indoor/outdoor capacity ratio	Outdoor air temp.		Indoor air temp. : °CDB													
			15.0		17.0		19.0		20.0		21.0		23.0		25.0	
			TC	PI	TC	PI	TC	PI	TC	PI	TC	PI	TC	PI	TC	PI
	°CDB	°CWB	kW	kW	kW	kW	kW	kW	kW	kW	kW	kW	kW	kW	kW	kW
30%	-24.9	-25.0	17.8	4.89	16.7	4.82	15.6	4.72	15.0	4.67	14.5	4.60	13.4	4.47	12.2	4.34
	-19.8	-20.0	17.8	4.65	16.7	4.59	15.6	4.52	15.0	4.47	14.5	4.42	13.4	4.29	12.2	4.16
	-14.7	-15.0	17.8	4.38	16.7	4.33	15.6	4.28	15.0	4.24	14.5	4.20	13.4	4.10	12.2	3.97
	-9.6	-10.0	17.8	4.07	16.7	4.03	15.6	3.98	15.0	3.95	14.5	3.91	13.4	3.84	12.2	3.73
	-4.4	-5.0	17.8	3.68	16.7	3.65	15.6	3.61	15.0	3.59	14.5	3.56	13.4	3.45	12.2	3.32
	-1.8	-2.5	17.8	3.46	16.7	3.45	15.6	3.37	15.0	3.33	14.5	3.29	13.4	3.20	12.2	3.08
	0.8	0.0	17.8	3.19	16.7	3.15	15.6	3.09	15.0	3.06	14.5	3.03	13.4	2.95	12.2	2.86
	2.8	2.0	17.8	2.94	16.7	2.91	15.6	2.87	15.0	2.85	14.5	2.82	13.4	2.77	12.2	2.69
	6.0	5.0	17.8	2.83	16.7	2.73	15.6	2.61	15.0	2.56	14.5	2.54	13.4	2.50	12.2	2.44
	7.0	6.0	17.8	2.83	16.7	2.73	15.6	2.61	15.0	2.56	14.5	2.51	13.4	2.42	12.2	2.37
	8.6	7.5	17.8	2.83	16.7	2.73	15.6	2.61	15.0	2.56	14.5	2.51	13.4	2.39	12.2	2.29
	11.2	10.0	17.8	2.83	16.7	2.73	15.6	2.61	15.0	2.56	14.5	2.51	13.4	2.39	12.2	2.29
	16.4	15.0	17.8	2.83	16.7	2.73	15.6	2.61	15.0	2.56	14.5	2.51	13.4	2.39	12.2	2.29

1. Capacity Ratio of Outdoor Unit (Standard-COP mode)

1-11. U-18ME1E81 (Cooling)

Capacity Ratio 30-130%

TC: Total capacity (kW), PI: Power input (kW)

Combination(%) :Indoor/outdoor capacity ratio	Outdoor air temp. ℃DB	Indoor air temp. : ℃WB													
		16.0		17.0		18.0		19.0		20.0		21.0		22.0	
		TC	PI	TC	PI	TC	PI	TC	PI	TC	PI	TC	PI	TC	PI
		kW	kW	kW	kW	kW	kW	kW	kW	kW	kW	kW	kW	kW	kW
130%	-10.0	53.8	6.66	53.8	6.66	53.8	6.66	53.8	6.66	57.4	7.11	60.9	7.55	64.5	8.01
	-5.0	53.8	6.68	53.8	6.68	53.8	6.68	53.8	6.68	57.4	7.12	60.9	7.58	64.5	8.02
	0.0	53.8	6.71	53.8	6.71	53.8	6.71	53.8	6.71	57.4	7.16	60.9	7.61	64.5	8.07
	5.0	53.8	6.75	53.8	6.75	53.8	6.75	53.8	6.75	57.4	7.22	60.9	7.69	64.5	8.15
	10.0	53.8	6.88	53.8	6.88	53.8	6.88	53.8	6.88	57.4	7.36	60.9	7.87	64.5	8.35
	15.0	53.8	7.21	53.8	7.21	53.8	7.21	53.8	7.21	57.4	7.76	60.9	8.34	64.5	9.17
	20.0	53.8	8.75	53.8	8.75	53.8	8.75	53.8	8.75	57.4	9.67	60.9	10.62	64.5	11.65
	25.0	53.8	10.90	53.8	10.90	53.8	10.90	53.8	10.90	57.4	12.00	60.9	13.16	64.5	14.39
	30.0	53.8	13.26	53.8	13.26	53.8	13.26	53.8	13.26	57.4	14.56	60.9	15.94	64.5	17.39
	35.0	53.8	15.82	53.8	15.82	53.8	15.82	53.8	15.82	57.4	17.35	60.4	18.59	61.6	18.59
	40.0	53.8	18.59	53.8	18.59	53.8	18.59	53.8	18.59	54.9	18.59	56.0	18.59	57.2	18.59
	43.0	51.4	18.59	51.4	18.59	51.4	18.59	51.4	18.59	52.4	18.59	53.5	18.59	54.7	18.59

Combination(%) :Indoor/outdoor capacity ratio	Outdoor air temp. ℃DB	Indoor air temp. : ℃WB													
		16.0		17.0		18.0		19.0		20.0		21.0		22.0	
		TC	PI	TC	PI	TC	PI	TC	PI	TC	PI	TC	PI	TC	PI
		kW	kW	kW	kW	kW	kW	kW	kW	kW	kW	kW	kW	kW	kW
120%	-10.0	50.4	6.23	52.5	6.51	52.5	6.51	52.5	6.51	56.0	6.94	59.5	7.38	63.0	7.82
	-5.0	50.4	6.25	52.5	6.52	52.5	6.52	52.5	6.52	56.0	6.96	59.5	7.39	63.0	7.84
	0.0	50.4	6.25	52.5	6.55	52.5	6.55	52.5	6.55	56.0	6.99	59.5	7.44	63.0	7.88
	5.0	50.4	6.28	52.5	6.59	52.5	6.59	52.5	6.59	56.0	7.05	59.5	7.51	63.0	7.97
	10.0	50.4	6.33	52.5	6.71	52.5	6.71	52.5	6.71	56.0	7.18	59.5	7.66	63.0	8.15
	15.0	50.4	6.51	52.5	7.01	52.5	7.01	52.5	7.01	56.0	7.55	59.5	8.11	63.0	8.81
	20.0	50.4	7.18	52.5	8.44	52.5	8.44	52.5	8.44	56.0	9.31	59.5	10.24	63.0	11.23
	25.0	50.4	9.07	52.5	10.52	52.5	10.52	52.5	10.52	56.0	11.58	59.5	12.70	63.0	13.87
	30.0	50.4	11.14	52.5	12.81	52.5	12.81	52.5	12.81	56.0	14.07	59.5	15.39	63.0	16.77
	35.0	50.4	13.40	52.5	15.30	52.5	15.30	52.5	15.30	56.0	16.77	59.5	18.30	61.1	18.59
	40.0	50.4	15.84	52.5	17.99	52.5	17.99	52.5	17.99	54.5	18.59	55.6	18.59	56.7	18.59
	43.0	50.4	17.42	51.0	18.59	51.0	18.59	51.0	18.59	52.1	18.59	53.2	18.59	54.3	18.59

Combination(%) :Indoor/outdoor capacity ratio	Outdoor air temp. ℃DB	Indoor air temp. : ℃WB													
		16.0		17.0		18.0		19.0		20.0		21.0		22.0	
		TC	PI	TC	PI	TC	PI	TC	PI	TC	PI	TC	PI	TC	PI
		kW	kW	kW	kW	kW	kW	kW	kW	kW	kW	kW	kW	kW	kW
110%	-10.0	45.1	5.58	48.9	6.05	51.3	6.35	51.3	6.35	54.7	6.78	58.1	7.21	61.5	7.62
	-5.0	45.1	5.59	48.9	6.06	51.3	6.36	51.3	6.36	54.7	6.79	58.1	7.22	61.5	7.65
	0.0	45.1	5.61	48.9	6.08	51.3	6.39	51.3	6.39	54.7	6.82	58.1	7.25	61.5	7.69
	5.0	45.1	5.62	48.9	6.11	51.3	6.44	51.3	6.44	54.7	6.88	58.1	7.32	61.5	7.76
	10.0	45.1	5.68	48.9	6.18	51.3	6.54	51.3	6.54	54.7	6.99	58.1	7.46	61.5	7.94
	15.0	45.1	5.83	48.9	6.36	51.3	6.82	51.3	6.82	54.7	7.35	58.1	7.88	61.5	8.45
	20.0	45.1	6.44	48.9	7.19	51.3	8.14	51.3	8.14	54.7	8.98	58.1	9.87	61.5	10.80
	25.0	45.1	8.12	48.9	9.05	51.3	10.17	51.3	10.17	54.7	11.17	58.1	12.24	61.5	13.36
	30.0	45.1	9.95	48.9	11.08	51.3	12.38	51.3	12.38	54.7	13.59	58.1	14.84	61.5	16.17
	35.0	45.1	11.97	48.9	13.31	51.3	14.80	51.3	14.80	54.7	16.20	58.1	17.67	60.6	18.59
	40.0	45.1	14.16	48.9	15.72	51.3	17.40	51.3	17.40	54.1	18.59	55.2	18.59	56.3	18.59
	43.0	45.1	15.54	48.9	17.25	50.6	18.59	50.6	18.59	51.7	18.59	52.8	18.59	53.8	18.59

Combination(%) :Indoor/outdoor capacity ratio	Outdoor air temp. ℃DB	Indoor air temp. : ℃WB													
		16.0		17.0		18.0		19.0		20.0		21.0		22.0	
		TC	PI	TC	PI	TC	PI	TC	PI	TC	PI	TC	PI	TC	PI
		kW	kW	kW	kW	kW	kW	kW	kW	kW	kW	kW	kW	kW	kW
100%	-10.0	40.0	4.95	43.4	5.36	46.7	5.78	50.0	6.19	53.4	6.61	56.7	7.02	60.0	7.44
	-5.0	40.0	4.96	43.4	5.38	46.7	5.79	50.0	6.21	53.4	6.62	56.7	7.04	60.0	7.46
	0.0	40.0	4.98	43.4	5.39	46.7	5.81	50.0	6.23	53.4	6.65	56.7	7.08	60.0	7.49
	5.0	40.0	4.99	43.4	5.42	46.7	5.85	50.0	6.28	53.4	6.71	56.7	7.14	60.0	7.56
	10.0	40.0	5.05	43.4	5.48	46.7	5.92	50.0	6.36	53.4	6.82	56.7	7.28	60.0	7.74
	15.0	40.0	5.19	43.4	5.66	46.7	6.15	50.0	6.64	53.4	7.14	56.7	7.65	60.0	8.18
	20.0	40.0	5.75	43.4	6.39	46.7	7.09	50.0	7.85	53.4	8.65	56.7	9.48	60.0	10.38
	25.0	40.0	7.22	43.4	8.04	46.7	8.89	50.0	9.81	53.4	10.77	56.7	11.80	60.0	12.86
	30.0	40.0	8.84	43.4	9.82	46.7	10.87	50.0	11.95	53.4	13.11	56.7	14.31	60.0	15.59
	35.0	40.0	10.61	43.4	11.78	46.7	13.01	50.0	14.30	53.4	15.64	56.7	17.06	60.0	18.53
	40.0	40.0	12.54	43.4	13.90	46.7	15.33	50.0	16.82	53.4	18.39	54.7	18.59	55.8	18.59
	43.0	40.0	13.77	43.4	15.26	46.7	16.82	50.0	18.43	51.3	18.59	52.3	18.59	53.4	18.59

1. Capacity Ratio of Outdoor Unit (Standard-COP mode)

U-18ME1E81 (Cooling)

Capacity Ratio 30-130%

TC: Total capacity (kW), PI: Power input (kW)

Combination(%) :Indoor/outdoor capacity ratio	Outdoor air temp. ℃DB	Indoor air temp. : ℃WB													
		16.0		17.0		18.0		19.0		20.0		21.0		22.0	
		TC	PI	TC	PI	TC	PI	TC	PI	TC	PI	TC	PI	TC	PI
		kW	kW	kW	kW	kW	kW	kW	kW	kW	kW	kW	kW	kW	kW
90%	-10.0	36.0	4.46	39.0	4.83	42.0	5.21	45.0	5.58	48.0	5.95	51.0	6.32	54.0	6.69
	-5.0	36.0	4.46	39.0	4.83	42.0	5.21	45.0	5.58	48.0	5.96	51.0	6.33	54.0	6.71
	0.0	36.0	4.48	39.0	4.85	42.0	5.22	45.0	5.59	48.0	5.98	51.0	6.35	54.0	6.74
	5.0	36.0	4.49	39.0	4.86	42.0	5.25	45.0	5.63	48.0	6.02	51.0	6.41	54.0	6.79
	10.0	36.0	4.52	39.0	4.92	42.0	5.31	45.0	5.71	48.0	6.11	51.0	6.51	54.0	6.91
	15.0	36.0	4.63	39.0	5.05	42.0	5.48	45.0	5.91	48.0	6.33	51.0	6.79	54.0	7.25
	20.0	36.0	5.05	39.0	5.56	42.0	6.12	45.0	6.74	48.0	7.39	51.0	8.08	54.0	8.81
	25.0	36.0	6.29	39.0	6.98	42.0	7.69	45.0	8.45	48.0	9.25	51.0	10.10	54.0	10.97
	30.0	36.0	7.72	39.0	8.55	42.0	9.42	45.0	10.34	48.0	11.30	51.0	12.30	54.0	13.34
	35.0	36.0	9.30	39.0	10.28	42.0	11.31	45.0	12.40	48.0	13.53	51.0	14.70	54.0	15.93
	40.0	36.0	11.00	39.0	12.14	42.0	13.36	45.0	14.61	48.0	15.92	51.0	17.29	53.7	18.55
	43.0	36.0	12.07	39.0	13.34	42.0	14.66	45.0	16.03	48.0	17.46	50.6	18.59	51.6	18.59

Combination(%) :Indoor/outdoor capacity ratio	Outdoor air temp. ℃DB	Indoor air temp. : ℃WB													
		16.0		17.0		18.0		19.0		20.0		21.0		22.0	
		TC	PI	TC	PI	TC	PI	TC	PI	TC	PI	TC	PI	TC	PI
		kW	kW	kW	kW	kW	kW	kW	kW	kW	kW	kW	kW	kW	kW
80%	-10.0	32.0	3.96	34.7	4.29	37.4	4.62	40.0	4.95	42.7	5.28	45.4	5.62	48.0	5.95
	-5.0	32.0	3.96	34.7	4.29	37.4	4.63	40.0	4.96	42.7	5.29	45.4	5.62	48.0	5.96
	0.0	32.0	3.98	34.7	4.30	37.4	4.63	40.0	4.98	42.7	5.31	45.4	5.63	48.0	5.98
	5.0	32.0	3.99	34.7	4.32	37.4	4.66	40.0	4.99	42.7	5.33	45.4	5.68	48.0	6.02
	10.0	32.0	4.00	34.7	4.35	37.4	4.70	40.0	5.05	42.7	5.39	45.4	5.75	48.0	6.11
	15.0	32.0	4.09	34.7	4.45	37.4	4.82	40.0	5.19	42.7	5.56	45.4	5.95	48.0	6.33
	20.0	32.0	4.39	34.7	4.82	37.4	5.28	40.0	5.75	42.7	6.26	45.4	6.81	48.0	7.39
	25.0	32.0	5.45	34.7	6.01	37.4	6.59	40.0	7.22	42.7	7.87	45.4	8.55	48.0	9.25
	30.0	32.0	6.69	34.7	7.38	37.4	8.09	40.0	8.84	42.7	9.62	45.4	10.44	48.0	11.30
	35.0	32.0	8.05	34.7	8.87	37.4	9.72	40.0	10.62	42.7	11.55	45.4	12.51	48.0	13.53
	40.0	32.0	9.54	34.7	10.50	37.4	11.50	40.0	12.54	42.7	13.63	45.4	14.76	48.0	15.93
	43.0	32.0	10.47	34.7	11.53	37.4	12.63	40.0	13.77	42.7	14.96	45.4	16.19	48.0	17.46

Combination(%) :Indoor/outdoor capacity ratio	Outdoor air temp. ℃DB	Indoor air temp. : ℃WB													
		16.0		17.0		18.0		19.0		20.0		21.0		22.0	
		TC	PI	TC	PI	TC	PI	TC	PI	TC	PI	TC	PI	TC	PI
		kW	kW	kW	kW	kW	kW	kW	kW	kW	kW	kW	kW	kW	kW
70%	-10.0	28.0	3.46	30.4	3.75	32.7	4.05	35.0	4.33	37.4	4.62	39.7	4.90	42.0	5.21
	-5.0	28.0	3.46	30.4	3.76	32.7	4.05	35.0	4.33	37.4	4.63	39.7	4.92	42.0	5.21
	0.0	28.0	3.47	30.4	3.76	32.7	4.05	35.0	4.35	37.4	4.63	39.7	4.93	42.0	5.22
	5.0	28.0	3.47	30.4	3.78	32.7	4.06	35.0	4.36	37.4	4.66	39.7	4.95	42.0	5.25
	10.0	28.0	3.50	30.4	3.80	32.7	4.09	35.0	4.39	37.4	4.70	39.7	5.01	42.0	5.31
	15.0	28.0	3.55	30.4	3.86	32.7	4.18	35.0	4.49	37.4	4.82	39.7	5.15	42.0	5.48
	20.0	28.0	3.76	30.4	4.12	32.7	4.49	35.0	4.88	37.4	5.28	39.7	5.69	42.0	6.12
	25.0	28.0	4.66	30.4	5.12	32.7	5.59	35.0	6.08	37.4	6.59	39.7	7.14	42.0	7.71
	30.0	28.0	5.73	30.4	6.28	32.7	6.86	35.0	7.46	37.4	8.09	39.7	8.75	42.0	9.42
	35.0	28.0	6.89	30.4	7.56	32.7	8.25	35.0	8.98	37.4	9.72	39.7	10.51	42.0	11.31
	40.0	28.0	8.17	30.4	8.95	32.7	9.77	35.0	10.62	37.4	11.50	39.7	12.41	42.0	13.36
	43.0	28.0	8.97	30.4	9.84	32.7	10.74	35.0	11.67	37.4	12.63	39.7	13.63	42.0	14.66

Combination(%) :Indoor/outdoor capacity ratio	Outdoor air temp. ℃DB	Indoor air temp. : ℃WB													
		16.0		17.0		18.0		19.0		20.0		21.0		22.0	
		TC	PI	TC	PI	TC	PI	TC	PI	TC	PI	TC	PI	TC	PI
		kW	kW	kW	kW	kW	kW	kW	kW	kW	kW	kW	kW	kW	kW
60%	-10.0	24.0	2.97	26.0	3.22	28.0	3.46	30.0	3.72	32.0	3.96	34.0	4.20	36.0	4.46
	-5.0	24.0	2.97	26.0	3.22	28.0	3.46	30.0	3.72	32.0	3.96	34.0	4.22	36.0	4.46
	0.0	24.0	2.97	26.0	3.22	28.0	3.47	30.0	3.72	32.0	3.98	34.0	4.22	36.0	4.48
	5.0	24.0	2.97	26.0	3.23	28.0	3.47	30.0	3.73	32.0	3.99	34.0	4.23	36.0	4.49
	10.0	24.0	2.99	26.0	3.25	28.0	3.50	30.0	3.76	32.0	4.00	34.0	4.26	36.0	4.52
	15.0	24.0	3.03	26.0	3.29	28.0	3.55	30.0	3.82	32.0	4.09	34.0	4.36	36.0	4.63
	20.0	24.0	3.16	26.0	3.46	28.0	3.76	30.0	4.06	32.0	4.39	34.0	4.72	36.0	5.05
	25.0	24.0	3.95	26.0	4.29	28.0	4.66	30.0	5.05	32.0	5.45	34.0	5.86	36.0	6.31
	30.0	24.0	4.83	26.0	5.28	28.0	5.73	30.0	6.21	32.0	6.69	34.0	7.21	36.0	7.74
	35.0	24.0	5.81	26.0	6.33	28.0	6.89	30.0	7.46	32.0	8.05	34.0	8.67	36.0	9.30
	40.0	24.0	6.88	26.0	7.51	28.0	8.17	30.0	8.84	32.0	9.54	34.0	10.25	36.0	11.00
	43.0	24.0	7.55	26.0	8.25	28.0	8.97	30.0	9.71	32.0	10.48	34.0	11.27	36.0	12.08

1. Capacity Ratio of Outdoor Unit (Standard-COP mode)

U-18ME1E81 (Cooling) **Capacity Ratio 30-130%**

TC: Total capacity (kW), PI: Power input (kW)

Combination(%) :Indoor/outdoor capacity ratio	Outdoor air temp. ℃DB	Indoor air temp. :℃WB													
		16.0		17.0		18.0		19.0		20.0		21.0		22.0	
		TC	PI	TC	PI	TC	PI	TC	PI	TC	PI	TC	PI	TC	PI
		kW	kW	kW	kW	kW	kW	kW	kW	kW	kW	kW	kW	kW	kW
50%	-10.0	20.0	2.47	21.7	2.67	23.4	2.89	25.0	3.09	26.7	3.30	28.4	3.50	30.0	3.72
	-5.0	20.0	2.47	21.7	2.69	23.4	2.89	25.0	3.09	26.7	3.30	28.4	3.50	30.0	3.72
	0.0	20.0	2.47	21.7	2.69	23.4	2.89	25.0	3.10	26.7	3.30	28.4	3.52	30.0	3.72
	5.0	20.0	2.49	21.7	2.69	23.4	2.90	25.0	3.10	26.7	3.32	28.4	3.52	30.0	3.73
	10.0	20.0	2.49	21.7	2.70	23.4	2.92	25.0	3.12	26.7	3.33	28.4	3.55	30.0	3.76
	15.0	20.0	2.52	21.7	2.73	23.4	2.95	25.0	3.16	26.7	3.37	28.4	3.60	30.0	3.82
	20.0	20.0	2.59	21.7	2.83	23.4	3.06	25.0	3.30	26.7	3.56	28.4	3.80	30.0	4.08
	25.0	20.0	3.27	21.7	3.55	23.4	3.83	25.0	4.12	26.7	4.42	28.4	4.73	30.0	5.05
	30.0	20.0	4.00	21.7	4.35	23.4	4.69	25.0	5.05	26.7	5.42	28.4	5.81	30.0	6.21
	35.0	20.0	4.80	21.7	5.22	23.4	5.63	25.0	6.08	26.7	6.52	28.4	6.99	30.0	7.46
	40.0	20.0	5.68	21.7	6.16	23.4	6.66	25.0	7.19	26.7	7.72	28.4	8.28	30.0	8.84
	43.0	20.0	6.22	21.7	6.76	23.4	7.32	25.0	7.91	26.7	8.49	28.4	9.09	30.0	9.71

Combination(%) :Indoor/outdoor capacity ratio	Outdoor air temp. ℃DB	Indoor air temp. :℃WB													
		16.0		17.0		18.0		19.0		20.0		21.0		22.0	
		TC	PI	TC	PI	TC	PI	TC	PI	TC	PI	TC	PI	TC	PI
		kW	kW	kW	kW	kW	kW	kW	kW	kW	kW	kW	kW	kW	kW
40%	-10.0	16.0	1.97	17.4	2.15	18.7	2.30	20.0	2.47	21.4	2.63	22.7	2.80	24.0	2.97
	-5.0	16.0	1.97	17.4	2.15	18.7	2.32	20.0	2.47	21.4	2.65	22.7	2.80	24.0	2.97
	0.0	16.0	1.99	17.4	2.15	18.7	2.32	20.0	2.47	21.4	2.65	22.7	2.80	24.0	2.97
	5.0	16.0	1.99	17.4	2.15	18.7	2.32	20.0	2.49	21.4	2.65	22.7	2.82	24.0	2.97
	10.0	16.0	1.99	17.4	2.16	18.7	2.32	20.0	2.49	21.4	2.66	22.7	2.83	24.0	2.99
	15.0	16.0	2.00	17.4	2.17	18.7	2.35	20.0	2.52	21.4	2.69	22.7	2.86	24.0	3.03
	20.0	16.0	2.04	17.4	2.23	18.7	2.40	20.0	2.59	21.4	2.77	22.7	2.97	24.0	3.16
	25.0	16.0	2.40	17.4	2.67	18.7	2.97	20.0	3.27	21.4	3.50	22.7	3.72	24.0	3.95
	30.0	16.0	3.25	17.4	3.49	18.7	3.75	20.0	4.00	21.4	4.28	22.7	4.55	24.0	4.83
	35.0	16.0	3.88	17.4	4.18	18.7	4.49	20.0	4.80	21.4	5.13	22.7	5.46	24.0	5.81
	40.0	16.0	4.55	17.4	4.92	18.7	5.29	20.0	5.68	21.4	6.06	22.7	6.46	24.0	6.88
	43.0	16.0	4.99	17.4	5.39	18.7	5.81	20.0	6.23	21.4	6.66	22.7	7.11	24.0	7.56

Combination(%) :Indoor/outdoor capacity ratio	Outdoor air temp. ℃DB	Indoor air temp. :℃WB													
		16.0		17.0		18.0		19.0		20.0		21.0		22.0	
		TC	PI	TC	PI	TC	PI	TC	PI	TC	PI	TC	PI	TC	PI
		kW	kW	kW	kW	kW	kW	kW	kW	kW	kW	kW	kW	kW	kW
30%	-10.0	12.0	1.49	13.0	1.60	14.0	1.73	15.0	1.86	16.0	1.97	17.0	2.10	18.0	2.23
	-5.0	12.0	1.49	13.0	1.60	14.0	1.73	15.0	1.86	16.0	1.97	17.0	2.10	18.0	2.23
	0.0	12.0	1.49	13.0	1.62	14.0	1.73	15.0	1.86	16.0	1.99	17.0	2.10	18.0	2.23
	5.0	12.0	1.49	13.0	1.62	14.0	1.73	15.0	1.86	16.0	1.99	17.0	2.12	18.0	2.23
	10.0	12.0	1.49	13.0	1.62	14.0	1.74	15.0	1.86	16.0	1.99	17.0	2.12	18.0	2.25
	15.0	12.0	1.50	13.0	1.63	14.0	1.74	15.0	1.87	16.0	2.00	17.0	2.13	18.0	2.26
	20.0	12.0	1.52	13.0	1.64	14.0	1.77	15.0	1.92	16.0	2.04	17.0	2.17	18.0	2.32
	25.0	12.0	1.67	13.0	1.84	14.0	2.03	15.0	2.22	16.0	2.40	17.0	2.62	18.0	2.83
	30.0	12.0	2.56	13.0	2.72	14.0	2.89	15.0	3.07	16.0	3.25	17.0	3.43	18.0	3.62
	35.0	12.0	3.02	13.0	3.22	14.0	3.43	15.0	3.65	16.0	3.88	17.0	4.10	18.0	4.33
	40.0	12.0	3.50	13.0	3.76	14.0	4.02	15.0	4.29	16.0	4.55	17.0	4.82	18.0	5.11
	43.0	12.0	3.83	13.0	4.10	14.0	4.40	15.0	4.69	16.0	4.99	17.0	5.29	18.0	5.61

1. Capacity Ratio of Outdoor Unit (Standard-COP mode)

1-12. U-18ME1E81 (Heating)

Capacity Ratio 30-130%

TC: Total capacity (kW), PI: Power input (kW)

Combination(%) :Indoor/outdoor capacity ratio	Outdoor air temp.		Indoor air temp. : °CDB													
			15.0		17.0		19.0		20.0		21.0		23.0		25.0	
			TC	PI	TC	PI	TC	PI	TC	PI	TC	PI	TC	PI	TC	PI
	°CDB	°CWB	kW	kW	kW	kW	kW	kW	kW	kW	kW	kW	kW	kW	kW	kW
130%	-24.9	-25.0	44.2	18.68	41.9	17.37	39.6	16.08	38.4	15.44	38.4	15.44	38.4	15.44	38.4	15.44
	-19.8	-20.0	46.6	18.85	44.2	17.59	41.8	16.30	40.5	15.67	40.5	15.67	40.5	15.67	40.5	15.67
	-14.7	-15.0	48.9	18.85	46.9	17.94	44.4	16.65	43.1	16.01	43.1	16.01	43.1	16.01	43.1	16.01
	-9.6	-10.0	51.8	18.85	50.5	18.46	47.8	17.17	46.5	16.52	46.5	16.52	46.5	16.52	46.5	16.52
	-4.4	-5.0	55.5	18.85	54.6	18.85	52.4	17.92	51.0	17.27	51.0	17.27	51.0	17.27	51.0	17.27
	-1.8	-2.5	57.8	18.85	56.8	18.85	55.3	18.43	53.9	17.75	53.9	17.75	53.9	17.75	53.9	17.75
	0.8	0.0	60.4	18.85	59.5	18.85	58.5	18.85	57.3	18.33	57.3	18.33	57.3	18.33	57.3	18.33
	2.8	2.0	62.9	18.85	61.9	18.85	60.9	18.85	60.2	18.71	60.2	18.71	60.2	18.71	60.2	18.71
	6.0	5.0	66.6	18.85	65.4	18.85	62.4	17.85	60.2	16.99	60.2	16.99	60.2	16.99	60.2	16.99
	7.0	6.0	67.9	18.85	66.7	18.85	62.4	17.24	60.2	16.43	60.2	16.43	60.2	16.43	60.2	16.43
	8.6	7.5	69.9	18.85	66.9	17.97	62.4	16.40	60.2	15.65	60.2	15.65	60.2	15.65	60.2	15.65
	11.2	10.0	71.3	18.04	66.9	16.49	62.4	14.99	60.2	14.27	60.2	14.27	60.2	14.27	60.2	14.27
	16.4	15.0	71.3	14.65	66.9	13.38	62.4	12.19	60.2	11.61	60.2	11.61	60.2	11.61	60.2	11.61

Combination(%) :Indoor/outdoor capacity ratio	Outdoor air temp.		Indoor air temp. : °CDB													
			15.0		17.0		19.0		20.0		21.0		23.0		25.0	
			TC	PI	TC	PI	TC	PI	TC	PI	TC	PI	TC	PI	TC	PI
	°CDB	°CWB	kW	kW	kW	kW	kW	kW	kW	kW	kW	kW	kW	kW	kW	kW
120%	-24.9	-25.0	44.4	18.40	42.0	17.12	39.6	15.86	38.4	15.25	38.4	15.25	38.4	15.25	38.4	15.25
	-19.8	-20.0	46.7	18.65	44.3	17.37	41.8	16.11	40.6	15.49	40.6	15.49	40.6	15.49	40.6	15.49
	-14.7	-15.0	49.3	18.85	47.0	17.72	44.5	16.46	43.2	15.83	43.2	15.83	43.2	15.83	43.2	15.83
	-9.6	-10.0	52.2	18.85	50.6	18.26	47.9	16.98	46.5	16.34	46.5	16.34	46.5	16.34	46.5	16.34
	-4.4	-5.0	55.9	18.85	54.9	18.85	52.5	17.73	51.0	17.10	51.0	17.10	51.0	17.10	51.0	17.10
	-1.8	-2.5	58.1	18.85	57.2	18.85	55.4	18.23	53.9	17.57	53.9	17.57	53.9	17.57	53.9	17.57
	0.8	0.0	60.8	18.85	59.8	18.85	58.8	18.81	57.2	18.13	57.2	18.13	57.2	18.13	57.2	18.13
	2.8	2.0	63.2	18.85	62.2	18.85	61.0	18.79	58.8	17.85	58.8	17.85	58.8	17.85	57.5	16.21
	6.0	5.0	66.7	18.85	65.4	18.76	61.0	17.07	58.8	16.27	58.8	16.27	58.8	16.27	57.5	14.99
	7.0	6.0	67.9	18.85	65.4	18.11	61.0	16.52	58.8	15.76	58.8	15.76	58.8	15.76	57.5	14.54
	8.6	7.5	69.7	18.75	65.4	17.20	61.0	15.73	58.8	15.04	58.8	15.04	58.8	15.04	57.5	13.75
	11.2	10.0	69.7	17.18	65.4	15.72	61.0	14.31	58.8	13.63	58.8	13.63	58.8	13.63	57.5	12.47
	16.4	15.0	69.7	13.91	65.4	12.73	61.0	11.61	58.8	11.08	58.8	11.08	58.8	11.08	57.5	10.15

Combination(%) :Indoor/outdoor capacity ratio	Outdoor air temp.		Indoor air temp. : °CDB													
			15.0		17.0		19.0		20.0		21.0		23.0		25.0	
			TC	PI	TC	PI	TC	PI	TC	PI	TC	PI	TC	PI	TC	PI
	°CDB	°CWB	kW	kW	kW	kW	kW	kW	kW	kW	kW	kW	kW	kW	kW	kW
110%	-24.9	-25.0	44.4	18.13	42.1	16.89	39.7	15.67	38.5	15.07	38.5	15.07	38.2	14.57	35.4	13.34
	-19.8	-20.0	46.8	18.39	44.4	17.14	41.9	15.92	40.6	15.31	40.6	15.31	40.4	14.83	37.5	13.57
	-14.7	-15.0	49.6	18.76	47.1	17.52	44.5	16.27	43.2	15.66	43.2	15.66	43.1	15.18	40.1	13.91
	-9.6	-10.0	52.6	18.85	50.6	18.05	47.9	16.79	46.5	16.18	46.5	16.18	46.5	16.18	43.3	14.40
	-4.4	-5.0	56.2	18.85	55.3	18.85	52.5	17.56	51.0	16.92	51.0	16.92	51.0	16.92	47.7	15.07
	-1.8	-2.5	58.5	18.85	57.5	18.85	55.4	18.04	53.9	17.39	53.9	17.39	53.9	17.39	50.5	15.50
	0.8	0.0	61.1	18.85	60.1	18.85	58.8	18.59	57.2	17.94	57.2	17.94	56.1	16.82	51.5	15.05
	2.8	2.0	63.5	18.85	62.3	18.85	59.5	17.91	57.4	17.04	57.4	17.04	56.1	15.98	51.5	14.34
	6.0	5.0	66.8	18.85	63.8	17.89	59.5	16.33	57.4	15.59	57.4	15.59	56.1	14.75	51.5	13.30
	7.0	6.0	68.0	18.85	63.8	17.30	59.5	15.82	57.4	15.11	57.4	15.11	56.1	14.33	51.5	12.86
	8.6	7.5	68.0	17.91	63.8	16.47	59.5	15.08	57.4	14.38	57.4	14.38	56.1	13.53	51.5	12.14
	11.2	10.0	68.0	16.34	63.8	14.96	59.5	13.64	57.4	13.02	57.4	13.02	56.1	12.27	51.5	11.01
	16.4	15.0	68.0	13.20	63.8	12.09	59.5	11.06	57.4	10.56	57.4	10.56	56.1	9.95	51.5	8.96

Combination(%) :Indoor/outdoor capacity ratio	Outdoor air temp.		Indoor air temp. : °CDB													
			15.0		17.0		19.0		20.0		21.0		23.0		25.0	
			TC	PI	TC	PI	TC	PI	TC	PI	TC	PI	TC	PI	TC	PI
	°CDB	°CWB	kW	kW	kW	kW	kW	kW	kW	kW	kW	kW	kW	kW	kW	kW
100%	-24.9	-25.0	44.5	17.86	42.2	16.66	39.8	15.49	38.5	14.89	37.3	14.31	34.8	13.18	32.3	12.08
	-19.8	-20.0	46.9	18.14	44.4	16.92	41.9	15.73	40.7	15.14	39.4	14.56	36.8	13.41	34.1	12.30
	-14.7	-15.0	49.7	18.53	47.2	17.30	44.6	16.11	43.3	15.50	41.9	14.91	39.3	13.75	36.5	12.62
	-9.6	-10.0	53.0	18.85	50.7	17.85	48.0	16.63	46.6	16.02	45.2	15.41	42.3	14.21	39.4	13.05
	-4.4	-5.0	56.6	18.85	55.4	18.65	52.5	17.39	51.1	16.75	49.6	16.12	46.5	14.88	43.3	13.64
	-1.8	-2.5	58.9	18.85	57.8	18.85	55.4	17.85	53.9	17.20	52.3	16.56	49.1	15.28	45.6	13.95
	0.8	0.0	61.5	18.85	60.5	18.85	58.1	18.04	56.0	17.17	53.9	16.31	49.8	14.70	45.6	13.20
	2.8	2.0	63.6	18.85	62.2	18.75	58.1	17.07	56.0	16.25	53.9	15.49	49.8	13.99	45.6	12.60
	6.0	5.0	66.4	18.62	62.2	17.08	58.1	15.63	56.0	14.94	53.9	14.25	49.8	12.95	45.6	11.67
	7.0	6.0	66.4	17.98	62.2	16.53	58.1	15.15	56.0	14.50	53.9	13.85	49.8	12.54	45.6	11.27
	8.6	7.5	66.4	17.11	62.2	15.75	58.1	14.38	56.0	13.73	53.9	13.08	49.8	11.83	45.6	10.64
	11.2	10.0	66.4	15.52	62.2	14.24	58.1	13.01	56.0	12.41	53.9	11.85	49.8	10.72	45.6	9.66
	16.4	15.0	66.4	12.50	62.2	11.48	58.1	10.51	56.0	10.05	53.9	9.58	49.8	8.70	45.6	7.86

1. Capacity Ratio of Outdoor Unit (Standard-COP mode)

U-18ME1E81 (Heating)

Capacity Ratio 30-130%

TC: Total capacity (kW), PI: Power input (kW)

Combination(%) :Indoor/outdoor capacity ratio	Outdoor air temp.		Indoor air temp. : ℃CDB													
			15.0		17.0		19.0		20.0		21.0		23.0		25.0	
			TC	PI	TC	PI	TC	PI	TC	PI	TC	PI	TC	PI	TC	PI
	℃CDB	℃CWB	kW	kW	kW	kW	kW	kW	kW	kW	kW	kW	kW	kW	kW	kW
90%	-24.9	-25.0	44.9	16.94	42.4	15.85	40.0	14.79	38.8	14.25	37.5	13.73	34.9	12.72	32.3	11.73
	-19.8	-20.0	47.3	17.24	44.7	16.15	42.2	15.07	40.9	14.53	39.6	14.01	36.9	12.96	34.2	11.95
	-14.7	-15.0	50.1	17.68	47.5	16.56	44.9	15.46	43.5	14.91	42.1	14.37	39.4	13.30	36.5	12.25
	-9.6	-10.0	53.8	18.27	51.0	17.12	48.2	15.99	46.8	15.41	45.4	14.86	42.4	13.75	39.4	12.66
	-4.4	-5.0	58.1	18.85	55.7	17.89	52.2	16.50	50.4	15.75	48.6	15.02	44.8	13.63	41.0	12.33
	-1.8	-2.5	59.8	18.63	56.0	17.10	52.2	15.65	50.4	14.95	48.6	14.28	44.8	12.98	41.0	11.76
	0.8	0.0	59.8	17.52	56.0	16.11	52.2	14.79	50.4	14.15	48.6	13.53	44.8	12.34	41.0	11.19
	2.8	2.0	59.8	16.62	56.0	15.34	52.2	14.11	50.4	13.53	48.6	12.95	44.8	11.82	41.0	10.74
	6.0	5.0	59.8	15.31	56.0	14.15	52.2	13.01	50.4	12.46	48.6	11.90	44.8	10.85	41.0	9.82
	7.0	6.0	59.8	14.78	56.0	13.63	52.2	12.53	50.4	11.99	48.6	11.47	44.8	10.44	41.0	9.47
	8.6	7.5	59.8	13.89	56.0	12.82	52.2	11.79	50.4	11.30	48.6	10.80	44.8	9.85	41.0	8.93
	11.2	10.0	59.8	12.48	56.0	11.54	52.2	10.63	50.4	10.18	48.6	9.74	44.8	8.89	41.0	8.06
	16.4	15.0	59.8	9.95	56.0	9.21	52.2	8.51	50.4	8.16	48.6	7.83	44.8	7.16	41.0	6.53

Combination(%) :Indoor/outdoor capacity ratio	Outdoor air temp.		Indoor air temp. : ℃CDB													
			15.0		17.0		19.0		20.0		21.0		23.0		25.0	
			TC	PI	TC	PI	TC	PI	TC	PI	TC	PI	TC	PI	TC	PI
	℃CDB	℃CWB	kW	kW	kW	kW	kW	kW	kW	kW	kW	kW	kW	kW	kW	kW
80%	-24.9	-25.0	45.4	16.20	42.9	15.23	40.4	14.27	39.1	13.79	37.8	13.33	35.2	12.40	32.5	11.51
	-19.8	-20.0	47.8	16.56	45.2	15.56	42.6	14.57	41.2	14.08	39.9	13.60	37.2	12.66	34.4	11.73
	-14.7	-15.0	50.7	17.02	48.0	15.99	45.2	14.98	43.8	14.47	42.4	13.96	39.6	12.99	36.5	11.96
	-9.6	-10.0	53.1	16.98	49.8	15.70	46.5	14.49	44.8	13.89	43.1	13.33	39.8	12.21	36.5	11.15
	-4.4	-5.0	53.1	15.56	49.8	14.43	46.5	13.34	44.8	12.82	43.1	12.30	39.8	11.28	36.5	10.32
	-1.8	-2.5	53.1	14.83	49.8	13.78	46.5	12.75	44.8	12.25	43.1	11.76	39.8	10.82	36.5	9.90
	0.8	0.0	53.1	14.09	49.8	13.11	46.5	12.17	44.8	11.70	43.1	11.24	39.8	10.32	36.5	9.44
	2.8	2.0	53.1	13.47	49.8	12.51	46.5	11.59	44.8	11.14	43.1	10.69	39.8	9.82	36.5	8.96
	6.0	5.0	53.1	12.21	49.8	11.35	46.5	10.51	44.8	10.11	43.1	9.70	39.8	8.92	36.5	8.15
	7.0	6.0	53.1	11.73	49.8	10.92	46.5	10.11	44.8	9.72	43.1	9.34	39.8	8.57	36.5	7.83
	8.6	7.5	53.1	11.01	49.8	10.24	46.5	9.50	44.8	9.14	43.1	8.77	39.8	8.06	36.5	7.38
	11.2	10.0	53.1	9.83	49.8	9.16	46.5	8.51	44.8	8.19	43.1	7.87	39.8	7.25	36.5	6.64
	16.4	15.0	53.1	7.73	49.8	7.24	46.5	6.76	44.8	6.51	43.1	6.28	39.8	5.81	36.5	5.35

Combination(%) :Indoor/outdoor capacity ratio	Outdoor air temp.		Indoor air temp. : ℃CDB													
			15.0		17.0		19.0		20.0		21.0		23.0		25.0	
			TC	PI	TC	PI	TC	PI	TC	PI	TC	PI	TC	PI	TC	PI
	℃CDB	℃CWB	kW	kW	kW	kW	kW	kW	kW	kW	kW	kW	kW	kW	kW	kW
70%	-24.9	-25.0	46.3	15.78	43.6	14.85	40.7	13.85	39.2	13.35	37.7	12.88	34.8	11.95	31.9	11.08
	-19.8	-20.0	46.5	15.02	43.6	14.04	40.7	13.09	39.2	12.64	37.7	12.18	34.8	11.31	31.9	10.48
	-14.7	-15.0	46.5	14.17	43.6	13.25	40.7	12.35	39.2	11.93	37.7	11.50	34.8	10.67	31.9	9.87
	-9.6	-10.0	46.5	13.28	43.6	12.43	40.7	11.60	39.2	11.19	37.7	10.80	34.8	10.02	31.9	9.27
	-4.4	-5.0	46.5	12.35	43.6	11.57	40.7	10.80	39.2	10.44	37.7	10.06	34.8	9.34	31.9	8.63
	-1.8	-2.5	46.5	11.83	43.6	11.08	40.7	10.34	39.2	9.98	37.7	9.63	34.8	8.93	31.9	8.25
	0.8	0.0	46.5	11.14	43.6	10.44	40.7	9.74	39.2	9.41	37.7	9.08	34.8	8.42	31.9	7.79
	2.8	2.0	46.5	10.53	43.6	9.87	40.7	9.22	39.2	8.92	37.7	8.60	34.8	7.98	31.9	7.37
	6.0	5.0	46.5	9.50	43.6	8.90	40.7	8.34	39.2	8.05	37.7	7.76	34.8	7.21	31.9	6.64
	7.0	6.0	46.5	9.09	43.6	8.54	40.7	7.99	39.2	7.71	37.7	7.45	34.8	6.92	31.9	6.38
	8.6	7.5	46.5	8.50	43.6	7.99	40.7	7.48	39.2	7.24	37.7	6.97	34.8	6.48	31.9	5.99
	11.2	10.0	46.5	7.54	43.6	7.11	40.7	6.67	39.2	6.45	37.7	6.25	34.8	5.81	31.9	5.39
	16.4	15.0	46.5	5.84	43.6	5.54	40.7	5.23	39.2	5.09	37.7	4.93	34.8	4.63	31.9	4.32

Combination(%) :Indoor/outdoor capacity ratio	Outdoor air temp.		Indoor air temp. : ℃CDB													
			15.0		17.0		19.0		20.0		21.0		23.0		25.0	
			TC	PI	TC	PI	TC	PI	TC	PI	TC	PI	TC	PI	TC	PI
	℃CDB	℃CWB	kW	kW	kW	kW	kW	kW	kW	kW	kW	kW	kW	kW	kW	kW
60%	-24.9	-25.0	39.8	12.14	37.4	11.48	34.8	10.86	33.6	10.56	32.4	10.25	29.8	9.66	27.4	9.08
	-19.8	-20.0	39.8	11.57	37.4	10.95	34.8	10.35	33.6	10.05	32.4	9.76	29.8	9.18	27.4	8.61
	-14.7	-15.0	39.8	11.02	37.4	10.41	34.8	9.83	33.6	9.54	32.4	9.27	29.8	8.70	27.4	8.15
	-9.6	-10.0	39.8	10.43	37.4	9.86	34.8	9.31	33.6	9.02	32.4	8.74	29.8	8.21	27.4	7.67
	-4.4	-5.0	39.8	9.58	37.4	9.08	34.8	8.57	33.6	8.32	32.4	8.08	29.8	7.60	27.4	7.11
	-1.8	-2.5	39.8	9.08	37.4	8.60	34.8	8.13	33.6	7.89	32.4	7.66	29.8	7.19	27.4	6.74
	0.8	0.0	39.8	8.53	37.4	8.08	34.8	7.64	33.6	7.42	32.4	7.19	29.8	6.76	27.4	6.32
	2.8	2.0	39.8	8.02	37.4	7.61	34.8	7.21	33.6	7.00	32.4	6.79	29.8	6.38	27.4	5.96
	6.0	5.0	39.8	7.18	37.4	6.82	34.8	6.44	33.6	6.25	32.4	6.06	29.8	5.68	27.4	5.31
	7.0	6.0	39.8	6.86	37.4	6.51	34.8	6.16	33.6	5.99	32.4	5.81	29.8	5.45	27.4	5.09
	8.6	7.5	39.8	6.38	37.4	6.06	34.8	5.76	33.6	5.60	32.4	5.44	29.8	5.10	27.4	4.79
	11.2	10.0	39.8	5.63	37.4	5.37	34.8	5.10	33.6	4.97	32.4	4.84	29.8	4.57	27.4	4.29
	16.4	15.0	39.8	4.84	37.4	4.60	34.8	4.34	33.6	4.21	32.4	4.07	29.8	3.81	27.4	3.55

1. Capacity Ratio of Outdoor Unit (Standard-COP mode)

U-18ME1E81 (Heating)

Capacity Ratio 30-130%

TC: Total capacity (kW), PI: Power input (kW)

Combination(%) :Indoor/outdoor capacity ratio	Outdoor air temp.		Indoor air temp. : °CDB													
			15.0		17.0		19.0		20.0		21.0		23.0		25.0	
			TC	PI	TC	PI	TC	PI	TC	PI	TC	PI	TC	PI	TC	PI
	°CDB	°CWB	kW	kW	kW	kW	kW	kW	kW	kW	kW	kW	kW	kW	kW	kW
50%	-24.9	-25.0	33.2	9.32	31.1	8.93	29.1	8.54	28.0	8.35	26.9	8.16	24.9	7.79	22.8	7.41
	-19.8	-20.0	33.2	8.95	31.1	8.57	29.1	8.18	28.0	7.99	26.9	7.80	24.9	7.41	22.8	7.03
	-14.7	-15.0	33.2	8.51	31.1	8.16	29.1	7.80	28.0	7.61	26.9	7.42	24.9	7.05	22.8	6.67
	-9.6	-10.0	33.2	7.92	31.1	7.61	29.1	7.29	28.0	7.13	26.9	6.96	24.9	6.64	22.8	6.29
	-4.4	-5.0	33.2	7.22	31.1	6.93	29.1	6.64	28.0	6.50	26.9	6.35	24.9	6.05	22.8	5.74
	-1.8	-2.5	33.2	6.80	31.1	6.54	29.1	6.28	28.0	6.13	26.9	6.00	24.9	5.71	22.8	5.42
	0.8	0.0	33.2	6.35	31.1	6.10	29.1	5.86	28.0	5.73	26.9	5.60	24.9	5.34	22.8	5.05
	2.8	2.0	33.2	5.95	31.1	5.73	29.1	5.50	28.0	5.37	26.9	5.25	24.9	4.96	22.8	4.67
	6.0	5.0	33.2	5.25	31.1	5.05	29.1	4.84	28.0	4.73	26.9	4.61	24.9	4.38	22.8	4.15
	7.0	6.0	33.2	4.99	31.1	4.81	29.1	4.63	28.0	4.52	26.9	4.42	24.9	4.21	22.8	3.97
	8.6	7.5	33.2	4.63	31.1	4.47	29.1	4.31	28.0	4.22	26.9	4.12	24.9	3.93	22.8	3.73
	11.2	10.0	33.2	4.16	31.1	3.94	29.1	3.80	28.0	3.73	26.9	3.65	24.9	3.51	22.8	3.34
	16.4	15.0	33.2	4.16	31.1	3.94	29.1	3.73	28.0	3.63	26.9	3.51	24.9	3.31	22.8	3.09

Combination(%) :Indoor/outdoor capacity ratio	Outdoor air temp.		Indoor air temp. : °CDB													
			15.0		17.0		19.0		20.0		21.0		23.0		25.0	
			TC	PI	TC	PI	TC	PI	TC	PI	TC	PI	TC	PI	TC	PI
	°CDB	°CWB	kW	kW	kW	kW	kW	kW	kW	kW	kW	kW	kW	kW	kW	kW
40%	-24.9	-25.0	26.5	7.15	24.9	6.92	23.2	6.68	22.4	6.57	21.6	6.44	19.9	6.21	18.3	5.97
	-19.8	-20.0	26.5	6.79	24.9	6.61	23.2	6.41	22.4	6.28	21.6	6.16	19.9	5.92	18.3	5.67
	-14.7	-15.0	26.5	6.38	24.9	6.22	23.2	6.05	22.4	5.96	21.6	5.86	19.9	5.63	18.3	5.37
	-9.6	-10.0	26.5	5.90	24.9	5.76	23.2	5.60	22.4	5.52	21.6	5.42	19.9	5.25	18.3	5.03
	-4.4	-5.0	26.5	5.32	24.9	5.19	23.2	5.06	22.4	4.99	21.6	4.92	19.9	4.74	18.3	4.55
	-1.8	-2.5	26.5	4.97	24.9	4.87	23.2	4.74	22.4	4.67	21.6	4.61	19.9	4.42	18.3	4.19
	0.8	0.0	26.5	4.61	24.9	4.51	23.2	4.38	22.4	4.29	21.6	4.21	19.9	4.03	18.3	3.83
	2.8	2.0	26.5	4.26	24.9	4.15	23.2	4.02	22.4	3.94	21.6	3.87	19.9	3.73	18.3	3.55
	6.0	5.0	26.5	3.68	24.9	3.60	23.2	3.51	22.4	3.45	21.6	3.41	19.9	3.28	18.3	3.15
	7.0	6.0	26.5	3.49	24.9	3.42	23.2	3.35	22.4	3.31	21.6	3.25	19.9	3.15	18.3	3.02
	8.6	7.5	26.5	3.47	24.9	3.31	23.2	3.13	22.4	3.07	21.6	3.03	19.9	2.94	18.3	2.83
	11.2	10.0	26.5	3.47	24.9	3.31	23.2	3.13	22.4	3.05	21.6	2.96	19.9	2.78	18.3	2.61
	16.4	15.0	26.5	3.47	24.9	3.31	23.2	3.13	22.4	3.05	21.6	2.96	19.9	2.78	18.3	2.61

Combination(%) :Indoor/outdoor capacity ratio	Outdoor air temp.		Indoor air temp. : °CDB													
			15.0		17.0		19.0		20.0		21.0		23.0		25.0	
			TC	PI	TC	PI	TC	PI	TC	PI	TC	PI	TC	PI	TC	PI
	°CDB	°CWB	kW	kW	kW	kW	kW	kW	kW	kW	kW	kW	kW	kW	kW	kW
30%	-24.9	-25.0	19.9	5.31	18.6	5.23	17.4	5.10	16.8	5.03	16.2	4.96	15.0	4.81	13.7	4.67
	-19.8	-20.0	19.9	5.02	18.6	4.96	17.4	4.87	16.8	4.81	16.2	4.74	15.0	4.58	13.7	4.42
	-14.7	-15.0	19.9	4.70	18.6	4.64	17.4	4.57	16.8	4.52	16.2	4.48	15.0	4.35	13.7	4.19
	-9.6	-10.0	19.9	4.31	18.6	4.26	17.4	4.21	16.8	4.18	16.2	4.13	15.0	4.03	13.7	3.90
	-4.4	-5.0	19.9	3.83	18.6	3.80	17.4	3.73	16.8	3.67	16.2	3.61	15.0	3.48	13.7	3.34
	-1.8	-2.5	19.9	3.52	18.6	3.47	17.4	3.38	16.8	3.34	16.2	3.29	15.0	3.18	13.7	3.06
	0.8	0.0	19.9	3.16	18.6	3.12	17.4	3.06	16.8	3.03	16.2	2.99	15.0	2.90	13.7	2.80
	2.8	2.0	19.9	2.87	18.6	2.84	17.4	2.80	16.8	2.78	16.2	2.76	15.0	2.68	13.7	2.60
	6.0	5.0	19.9	2.78	18.6	2.65	17.4	2.52	16.8	2.47	16.2	2.42	15.0	2.38	13.7	2.32
	7.0	6.0	19.9	2.78	18.6	2.65	17.4	2.52	16.8	2.47	16.2	2.39	15.0	2.28	13.7	2.22
	8.6	7.5	19.9	2.78	18.6	2.65	17.4	2.52	16.8	2.47	16.2	2.39	15.0	2.26	13.7	2.13
	11.2	10.0	19.9	2.78	18.6	2.65	17.4	2.52	16.8	2.47	16.2	2.39	15.0	2.26	13.7	2.13
	16.4	15.0	19.9	2.78	18.6	2.65	17.4	2.52	16.8	2.47	16.2	2.39	15.0	2.26	13.7	2.13

1. Capacity Ratio of Outdoor Unit (Standard-COP mode)

1-13. U-20ME1E81 (Cooling)

Capacity Ratio 30-130%

TC: Total capacity (kW), PI: Power input (kW)

Combination(%) :Indoor/outdoor capacity ratio	Outdoor air temp. ℃DB	Indoor air temp. :℃WB													
		16.0		17.0		18.0		19.0		20.0		21.0		22.0	
		TC	PI	TC	PI	TC	PI	TC	PI	TC	PI	TC	PI	TC	PI
		kW	kW	kW	kW	kW	kW	kW	kW	kW	kW	kW	kW	kW	kW
130%	-10.0	60.2	7.21	60.2	7.21	60.2	7.21	60.2	7.21	64.2	7.69	68.2	8.18	72.2	8.67
	-5.0	60.2	7.24	60.2	7.24	60.2	7.24	60.2	7.24	64.2	7.73	68.2	8.22	72.2	8.72
	0.0	60.2	7.29	60.2	7.29	60.2	7.29	60.2	7.29	64.2	7.78	68.2	8.28	72.2	8.79
	5.0	60.2	7.38	60.2	7.38	60.2	7.38	60.2	7.38	64.2	7.90	68.2	8.42	72.2	8.94
	10.0	60.2	7.59	60.2	7.59	60.2	7.59	60.2	7.59	64.2	8.16	68.2	8.74	72.2	9.31
	15.0	60.2	8.32	60.2	8.32	60.2	8.32	60.2	8.32	64.2	9.27	68.2	10.28	72.2	11.36
	20.0	60.2	10.55	60.2	10.55	60.2	10.55	60.2	10.55	64.2	11.71	68.2	12.94	72.2	14.23
	25.0	60.2	13.00	60.2	13.00	60.2	13.00	60.2	13.00	64.2	14.38	68.2	15.84	72.2	17.40
	30.0	60.2	15.71	60.2	15.71	60.2	15.71	60.2	15.71	64.2	17.32	68.2	19.03	72.2	20.85
	35.0	60.2	18.61	60.2	18.61	60.2	18.61	60.2	18.61	64.2	20.50	67.4	21.84	68.6	21.84
	40.0	60.2	21.76	60.2	21.76	60.2	21.76	60.2	21.76	61.5	21.84	62.7	21.84	63.9	21.84
	43.0	58.0	21.84	58.0	21.84	58.0	21.84	58.0	21.84	59.0	21.84	60.1	21.84	61.3	21.84

Combination(%) :Indoor/outdoor capacity ratio	Outdoor air temp. ℃DB	Indoor air temp. :℃WB													
		16.0		17.0		18.0		19.0		20.0		21.0		22.0	
		TC	PI	TC	PI	TC	PI	TC	PI	TC	PI	TC	PI	TC	PI
		kW	kW	kW	kW	kW	kW	kW	kW	kW	kW	kW	kW	kW	kW
120%	-10.0	56.4	6.75	58.8	7.04	58.8	7.04	58.8	7.04	62.7	7.53	66.6	8.00	70.6	8.47
	-5.0	56.4	6.75	58.8	7.07	58.8	7.07	58.8	7.07	62.7	7.54	66.6	8.03	70.6	8.50
	0.0	56.4	6.79	58.8	7.11	58.8	7.11	58.8	7.11	62.7	7.59	66.6	8.10	70.6	8.58
	5.0	56.4	6.82	58.8	7.19	58.8	7.19	58.8	7.19	62.7	7.71	66.6	8.22	70.6	8.72
	10.0	56.4	6.92	58.8	7.39	58.8	7.39	58.8	7.39	62.7	7.95	66.6	8.52	70.6	9.07
	15.0	56.4	7.22	58.8	8.01	58.8	8.01	58.8	8.01	62.7	8.92	66.6	9.88	70.6	10.92
	20.0	56.4	8.55	58.8	10.18	58.8	10.18	58.8	10.18	62.7	11.29	66.6	12.45	70.6	13.69
	25.0	56.4	10.67	58.8	12.55	58.8	12.55	58.8	12.55	62.7	13.88	66.6	15.27	70.6	16.77
	30.0	56.4	13.02	58.8	15.17	58.8	15.17	58.8	15.17	62.7	16.73	66.6	18.36	70.6	20.09
	35.0	56.4	15.57	58.8	17.99	58.8	17.99	58.8	17.99	62.7	19.81	66.6	21.71	68.1	21.84
	40.0	56.4	18.33	58.8	21.07	58.8	21.07	58.8	21.07	61.0	21.84	62.2	21.84	63.4	21.84
	43.0	56.4	20.09	57.6	21.84	57.6	21.84	57.6	21.84	58.6	21.84	59.7	21.84	60.8	21.84

Combination(%) :Indoor/outdoor capacity ratio	Outdoor air temp. ℃DB	Indoor air temp. :℃WB													
		16.0		17.0		18.0		19.0		20.0		21.0		22.0	
		TC	PI	TC	PI	TC	PI	TC	PI	TC	PI	TC	PI	TC	PI
		kW	kW	kW	kW	kW	kW	kW	kW	kW	kW	kW	kW	kW	kW
110%	-10.0	50.5	6.03	54.7	6.55	57.4	6.87	57.4	6.87	61.2	7.34	65.1	7.80	68.9	8.27
	-5.0	50.5	6.05	54.7	6.55	57.4	6.90	57.4	6.90	61.2	7.36	65.1	7.83	68.9	8.30
	0.0	50.5	6.06	54.7	6.59	57.4	6.94	57.4	6.94	61.2	7.41	65.1	7.90	68.9	8.37
	5.0	50.5	6.12	54.7	6.64	57.4	7.02	57.4	7.02	61.2	7.51	65.1	8.01	68.9	8.50
	10.0	50.5	6.22	54.7	6.75	57.4	7.21	57.4	7.21	61.2	7.74	65.1	8.28	68.9	8.84
	15.0	50.5	6.48	54.7	7.12	57.4	7.76	57.4	7.76	61.2	8.58	65.1	9.49	68.9	10.48
	20.0	50.5	7.66	54.7	8.60	57.4	9.81	57.4	9.81	61.2	10.87	65.1	12.00	68.9	13.17
	25.0	50.5	9.54	54.7	10.70	57.4	12.11	57.4	12.11	61.2	13.37	65.1	14.72	68.9	16.13
	30.0	50.5	11.63	54.7	13.00	57.4	14.65	57.4	14.65	61.2	16.14	65.1	17.71	68.9	19.37
	35.0	50.5	13.91	54.7	15.52	57.4	17.39	57.4	17.39	61.2	19.12	65.1	20.95	67.5	21.84
	40.0	50.5	16.35	54.7	18.23	57.4	20.36	57.4	20.36	60.5	21.84	61.7	21.84	62.9	21.84
	43.0	50.5	17.93	54.7	19.96	57.2	21.84	57.2	21.84	58.2	21.84	59.2	21.84	60.4	21.84

Combination(%) :Indoor/outdoor capacity ratio	Outdoor air temp. ℃DB	Indoor air temp. :℃WB													
		16.0		17.0		18.0		19.0		20.0		21.0		22.0	
		TC	PI	TC	PI	TC	PI	TC	PI	TC	PI	TC	PI	TC	PI
		kW	kW	kW	kW	kW	kW	kW	kW	kW	kW	kW	kW	kW	kW
100%	-10.0	44.8	5.36	48.6	5.81	52.2	6.25	56.0	6.70	59.8	7.16	63.4	7.61	67.2	8.06
	-5.0	44.8	5.38	48.6	5.81	52.2	6.27	56.0	6.72	59.8	7.17	63.4	7.64	67.2	8.10
	0.0	44.8	5.39	48.6	5.85	52.2	6.30	56.0	6.77	59.8	7.22	63.4	7.69	67.2	8.16
	5.0	44.8	5.43	48.6	5.90	52.2	6.37	56.0	6.84	59.8	7.32	63.4	7.80	67.2	8.30
	10.0	44.8	5.51	48.6	6.01	52.2	6.50	56.0	7.02	59.8	7.53	63.4	8.06	67.2	8.60
	15.0	44.8	5.78	48.6	6.35	52.2	6.92	56.0	7.54	59.8	8.25	63.4	9.12	67.2	10.06
	20.0	44.8	6.82	48.6	7.64	52.2	8.52	56.0	9.46	59.8	10.47	63.4	11.52	67.2	12.67
	25.0	44.8	8.48	48.6	9.49	52.2	10.55	56.0	11.69	59.8	12.90	63.4	14.18	67.2	15.52
	30.0	44.8	10.32	48.6	11.52	52.2	12.78	56.0	14.15	59.8	15.57	63.4	17.07	67.2	18.66
	35.0	44.8	12.33	48.6	13.74	52.2	15.22	56.0	16.80	59.8	18.46	63.4	20.21	66.9	21.81
	40.0	44.8	14.48	48.6	16.13	52.2	17.86	56.0	19.69	59.8	21.59	61.2	21.84	62.4	21.84
	43.0	44.8	15.88	48.6	17.66	52.2	19.44	56.0	21.29	57.8	21.84	58.9	21.84	59.9	21.84

1. Capacity Ratio of Outdoor Unit (Standard-COP mode)

U-20ME1E81 (Cooling) **Capacity Ratio 30-130%**

TC: Total capacity (kW), PI: Power input (kW)

Combination(%) :Indoor/outdoor capacity ratio	Outdoor air temp. ℃DB	Indoor air temp. : ℃WB													
		16.0		17.0		18.0		19.0		20.0		21.0		22.0	
		TC	PI	TC	PI	TC	PI	TC	PI	TC	PI	TC	PI	TC	PI
		kW	kW	kW	kW	kW	kW	kW	kW	kW	kW	kW	kW	kW	kW
90%	-10.0	40.3	4.82	43.7	5.22	47.0	5.63	50.4	6.03	53.8	6.43	57.1	6.84	60.5	7.24
	-5.0	40.3	4.82	43.7	5.24	47.0	5.64	50.4	6.05	53.8	6.45	57.1	6.87	60.5	7.27
	0.0	40.3	4.84	43.7	5.26	47.0	5.66	50.4	6.08	53.8	6.48	57.1	6.90	60.5	7.32
	5.0	40.3	4.87	43.7	5.29	47.0	5.71	50.4	6.13	53.8	6.55	57.1	6.99	60.5	7.43
	10.0	40.3	4.94	43.7	5.38	47.0	5.81	50.4	6.27	53.8	6.72	57.1	7.17	60.5	7.64
	15.0	40.3	5.14	43.7	5.63	47.0	6.13	50.4	6.65	53.8	7.19	57.1	7.74	60.5	8.48
	20.0	40.3	5.93	43.7	6.60	47.0	7.34	50.4	8.11	53.8	8.94	57.1	9.81	60.5	10.74
	25.0	40.3	7.39	43.7	8.23	47.0	9.12	50.4	10.06	53.8	11.05	57.1	12.11	60.5	13.22
	30.0	40.3	9.00	43.7	10.01	47.0	11.07	50.4	12.20	53.8	13.39	57.1	14.63	60.5	15.94
	35.0	40.3	10.77	43.7	11.96	47.0	13.22	50.4	14.53	53.8	15.91	57.1	17.37	60.5	18.90
	40.0	40.3	12.68	43.7	14.06	47.0	15.52	50.4	17.05	53.8	18.66	57.1	20.34	60.2	21.84
	43.0	40.3	13.89	43.7	15.41	47.0	17.00	50.4	18.61	53.8	20.24	57.0	21.84	58.0	21.84

Combination(%) :Indoor/outdoor capacity ratio	Outdoor air temp. ℃DB	Indoor air temp. : ℃WB													
		16.0		17.0		18.0		19.0		20.0		21.0		22.0	
		TC	PI	TC	PI	TC	PI	TC	PI	TC	PI	TC	PI	TC	PI
		kW	kW	kW	kW	kW	kW	kW	kW	kW	kW	kW	kW	kW	kW
80%	-10.0	35.8	4.28	38.8	4.64	41.8	5.01	44.8	5.36	47.8	5.71	50.8	6.08	53.8	6.43
	-5.0	35.8	4.28	38.8	4.65	41.8	5.01	44.8	5.38	47.8	5.73	50.8	6.10	53.8	6.45
	0.0	35.8	4.30	38.8	4.65	41.8	5.02	44.8	5.39	47.8	5.75	50.8	6.12	53.8	6.48
	5.0	35.8	4.32	38.8	4.69	41.8	5.06	44.8	5.43	47.8	5.80	50.8	6.18	53.8	6.55
	10.0	35.8	4.37	38.8	4.75	41.8	5.14	44.8	5.53	47.8	5.91	50.8	6.32	53.8	6.72
	15.0	35.8	4.50	38.8	4.92	41.8	5.36	44.8	5.80	47.8	6.25	50.8	6.72	53.8	7.21
	20.0	35.8	5.11	38.8	5.68	41.8	6.27	44.8	6.89	47.8	7.56	50.8	8.25	53.8	9.00
	25.0	35.8	6.38	38.8	7.07	41.8	7.80	44.8	8.57	47.8	9.37	50.8	10.23	53.8	11.12
	30.0	35.8	7.78	38.8	8.62	41.8	9.49	44.8	10.42	47.8	11.37	50.8	12.40	53.8	13.47
	35.0	35.8	9.32	38.8	10.30	41.8	11.34	44.8	12.43	47.8	13.57	50.8	14.77	53.8	16.01
	40.0	35.8	10.97	38.8	12.13	41.8	13.34	44.8	14.60	47.8	15.93	50.8	17.32	53.8	18.77
	43.0	35.8	12.03	38.8	13.31	41.8	14.62	44.8	16.01	47.8	17.44	50.8	18.87	53.8	20.33

Combination(%) :Indoor/outdoor capacity ratio	Outdoor air temp. ℃DB	Indoor air temp. : ℃WB													
		16.0		17.0		18.0		19.0		20.0		21.0		22.0	
		TC	PI	TC	PI	TC	PI	TC	PI	TC	PI	TC	PI	TC	PI
		kW	kW	kW	kW	kW	kW	kW	kW	kW	kW	kW	kW	kW	kW
70%	-10.0	31.4	3.75	34.0	4.07	36.6	4.37	39.2	4.69	41.8	5.01	44.4	5.31	47.0	5.63
	-5.0	31.4	3.75	34.0	4.07	36.6	4.38	39.2	4.69	41.8	5.01	44.4	5.33	47.0	5.64
	0.0	31.4	3.76	34.0	4.08	36.6	4.38	39.2	4.70	41.8	5.02	44.4	5.34	47.0	5.66
	5.0	31.4	3.78	34.0	4.10	36.6	4.42	39.2	4.74	41.8	5.06	44.4	5.38	47.0	5.71
	10.0	31.4	3.81	34.0	4.13	36.6	4.47	39.2	4.80	41.8	5.14	44.4	5.48	47.0	5.83
	15.0	31.4	3.90	34.0	4.25	36.6	4.62	39.2	4.99	41.8	5.38	44.4	5.76	47.0	6.17
	20.0	31.4	4.32	34.0	4.79	36.6	5.29	39.2	5.78	41.8	6.30	44.4	6.85	47.0	7.44
	25.0	31.4	5.46	34.0	6.01	36.6	6.60	39.2	7.21	41.8	7.85	44.4	8.53	47.0	9.24
	30.0	31.4	6.65	34.0	7.32	36.6	8.03	39.2	8.77	41.8	9.54	44.4	10.37	47.0	11.21
	35.0	31.4	7.96	34.0	8.77	36.6	9.61	39.2	10.48	41.8	11.41	44.4	12.36	47.0	13.37
	40.0	31.4	9.37	34.0	10.33	36.6	11.31	39.2	12.35	41.8	13.41	44.4	14.53	47.0	15.69
	43.0	31.4	10.28	34.0	11.32	36.6	12.40	39.2	13.52	41.8	14.70	44.4	15.91	47.0	17.17

Combination(%) :Indoor/outdoor capacity ratio	Outdoor air temp. ℃DB	Indoor air temp. : ℃WB													
		16.0		17.0		18.0		19.0		20.0		21.0		22.0	
		TC	PI	TC	PI	TC	PI	TC	PI	TC	PI	TC	PI	TC	PI
		kW	kW	kW	kW	kW	kW	kW	kW	kW	kW	kW	kW	kW	kW
60%	-10.0	26.9	3.21	29.1	3.48	31.4	3.75	33.6	4.02	35.8	4.28	38.1	4.55	40.3	4.82
	-5.0	26.9	3.21	29.1	3.48	31.4	3.75	33.6	4.02	35.8	4.28	38.1	4.55	40.3	4.82
	0.0	26.9	3.23	29.1	3.49	31.4	3.76	33.6	4.03	35.8	4.30	38.1	4.57	40.3	4.84
	5.0	26.9	3.23	29.1	3.49	31.4	3.78	33.6	4.05	35.8	4.32	38.1	4.60	40.3	4.87
	10.0	26.9	3.24	29.1	3.53	31.4	3.81	33.6	4.08	35.8	4.37	38.1	4.65	40.3	4.96
	15.0	26.9	3.31	29.1	3.61	31.4	3.91	33.6	4.22	35.8	4.52	38.1	4.84	40.3	5.16
	20.0	26.9	3.58	29.1	3.95	31.4	4.35	33.6	4.75	35.8	5.19	38.1	5.61	40.3	6.05
	25.0	26.9	4.60	29.1	5.04	31.4	5.49	33.6	5.98	35.8	6.47	38.1	6.99	40.3	7.54
	30.0	26.9	5.61	29.1	6.13	31.4	6.69	33.6	7.27	35.8	7.88	38.1	8.52	40.3	9.17
	35.0	26.9	6.70	29.1	7.34	31.4	8.01	33.6	8.70	35.8	9.42	38.1	10.18	40.3	10.95
	40.0	26.9	7.90	29.1	8.65	31.4	9.42	33.6	10.25	35.8	11.09	38.1	11.98	40.3	12.89
	43.0	26.9	8.65	29.1	9.48	31.4	10.33	33.6	11.24	35.8	12.16	38.1	13.12	40.3	14.13

1. Capacity Ratio of Outdoor Unit (Standard-COP mode)

U-20ME1E81 (Cooling) **Capacity Ratio 30-130%**

TC: Total capacity (kW), PI: Power input (kW)

Combination(%) :Indoor/outdoor capacity ratio	Outdoor air temp. ℃DB	Indoor air temp. :℃WB													
		16.0		17.0		18.0		19.0		20.0		21.0		22.0	
		TC	PI	TC	PI	TC	PI	TC	PI	TC	PI	TC	PI	TC	PI
		kW	kW	kW	kW	kW	kW	kW	kW	kW	kW	kW	kW	kW	kW
50%	-10.0	22.4	2.67	24.2	2.89	26.2	3.12	28.0	3.34	29.8	3.56	31.8	3.80	33.6	4.02
	-5.0	22.4	2.67	24.2	2.91	26.2	3.12	28.0	3.34	29.8	3.58	31.8	3.80	33.6	4.02
	0.0	22.4	2.69	24.2	2.91	26.2	3.12	28.0	3.36	29.8	3.58	31.8	3.80	33.6	4.03
	5.0	22.4	2.69	24.2	2.91	26.2	3.14	28.0	3.36	29.8	3.60	31.8	3.81	33.6	4.05
	10.0	22.4	2.70	24.2	2.92	26.2	3.16	28.0	3.39	29.8	3.63	31.8	3.86	33.6	4.10
	15.0	22.4	2.74	24.2	2.97	26.2	3.23	28.0	3.46	29.8	3.71	31.8	3.96	33.6	4.22
	20.0	22.4	2.89	24.2	3.18	26.2	3.48	28.0	3.80	29.8	4.12	31.8	4.45	33.6	4.82
	25.0	22.4	3.83	24.2	4.17	26.2	4.50	28.0	4.86	29.8	5.24	31.8	5.63	33.6	6.03
	30.0	22.4	4.64	24.2	5.06	26.2	5.48	28.0	5.91	29.8	6.37	31.8	6.85	33.6	7.34
	35.0	22.4	5.53	24.2	6.03	26.2	6.54	28.0	7.07	29.8	7.61	31.8	8.18	33.6	8.77
	40.0	22.4	6.50	24.2	7.09	26.2	7.69	28.0	8.32	29.8	8.97	31.8	9.64	33.6	10.33
	43.0	22.4	7.12	24.2	7.76	26.2	8.43	28.0	9.12	29.8	9.83	31.8	10.57	33.6	11.32

Combination(%) :Indoor/outdoor capacity ratio	Outdoor air temp. ℃DB	Indoor air temp. :℃WB													
		16.0		17.0		18.0		19.0		20.0		21.0		22.0	
		TC	PI	TC	PI	TC	PI	TC	PI	TC	PI	TC	PI	TC	PI
		kW	kW	kW	kW	kW	kW	kW	kW	kW	kW	kW	kW	kW	kW
40%	-10.0	17.9	2.13	19.4	2.32	20.9	2.50	22.4	2.67	23.9	2.86	25.4	3.02	26.9	3.21
	-5.0	17.9	2.13	19.4	2.32	20.9	2.50	22.4	2.67	23.9	2.86	25.4	3.04	26.9	3.21
	0.0	17.9	2.15	19.4	2.32	20.9	2.50	22.4	2.69	23.9	2.86	25.4	3.04	26.9	3.23
	5.0	17.9	2.15	19.4	2.34	20.9	2.50	22.4	2.69	23.9	2.87	25.4	3.04	26.9	3.23
	10.0	17.9	2.15	19.4	2.34	20.9	2.52	22.4	2.70	23.9	2.89	25.4	3.07	26.9	3.26
	15.0	17.9	2.18	19.4	2.37	20.9	2.55	22.4	2.74	23.9	2.94	25.4	3.12	26.9	3.33
	20.0	17.9	2.27	19.4	2.47	20.9	2.69	22.4	2.92	23.9	3.14	25.4	3.39	26.9	3.65
	25.0	17.9	3.12	19.4	3.36	20.9	3.61	22.4	3.86	23.9	4.13	25.4	4.42	26.9	4.70
	30.0	17.9	3.76	19.4	4.07	20.9	4.37	22.4	4.69	23.9	5.01	25.4	5.36	26.9	5.71
	35.0	17.9	4.45	19.4	4.82	20.9	5.19	22.4	5.58	23.9	5.98	25.4	6.38	26.9	6.82
	40.0	17.9	5.21	19.4	5.64	20.9	6.10	22.4	6.55	23.9	7.02	25.4	7.53	26.9	8.01
	43.0	17.9	5.70	19.4	6.18	20.9	6.67	22.4	7.17	23.9	7.69	25.4	8.23	26.9	8.79

Combination(%) :Indoor/outdoor capacity ratio	Outdoor air temp. ℃DB	Indoor air temp. :℃WB													
		16.0		17.0		18.0		19.0		20.0		21.0		22.0	
		TC	PI	TC	PI	TC	PI	TC	PI	TC	PI	TC	PI	TC	PI
		kW	kW	kW	kW	kW	kW	kW	kW	kW	kW	kW	kW	kW	kW
30%	-10.0	13.4	1.60	14.6	1.73	15.7	1.86	16.8	2.00	17.9	2.13	19.0	2.27	20.2	2.40
	-5.0	13.4	1.61	14.6	1.75	15.7	1.86	16.8	2.00	17.9	2.13	19.0	2.27	20.2	2.40
	0.0	13.4	1.61	14.6	1.75	15.7	1.88	16.8	2.02	17.9	2.15	19.0	2.28	20.2	2.42
	5.0	13.4	1.61	14.6	1.75	15.7	1.88	16.8	2.02	17.9	2.15	19.0	2.28	20.2	2.42
	10.0	13.4	1.61	14.6	1.75	15.7	1.88	16.8	2.02	17.9	2.15	19.0	2.28	20.2	2.44
	15.0	13.4	1.63	14.6	1.76	15.7	1.90	16.8	2.03	17.9	2.18	19.0	2.32	20.2	2.45
	20.0	13.4	1.66	14.6	1.81	15.7	1.97	16.8	2.12	17.9	2.27	19.0	2.44	20.2	2.60
	25.0	13.4	2.08	14.6	2.39	15.7	2.70	16.8	3.07	17.9	3.16	19.0	3.34	20.2	3.53
	30.0	13.4	2.96	14.6	3.16	15.7	3.38	16.8	3.58	17.9	3.80	19.0	4.03	20.2	4.27
	35.0	13.4	3.46	14.6	3.71	15.7	3.96	16.8	4.23	17.9	4.50	19.0	4.77	20.2	5.06
	40.0	13.4	4.02	14.6	4.32	15.7	4.62	16.8	4.94	17.9	5.28	19.0	5.59	20.2	5.93
	43.0	13.4	4.37	14.6	4.70	15.7	5.06	16.8	5.39	17.9	5.76	19.0	6.12	20.2	6.50

1. Capacity Ratio of Outdoor Unit (Standard-COP mode)

1-14. U-20ME1E81 (Heating)

Capacity Ratio 30-130%

TC: Total capacity (kW), PI: Power input (kW)

Combination(%) :Indoor/outdoor capacity ratio	Outdoor air temp.		Indoor air temp. : ℃CDB													
			15.0		17.0		19.0		20.0		21.0		23.0		25.0	
			TC	PI	TC	PI	TC	PI	TC	PI	TC	PI	TC	PI	TC	PI
	℃CDB	℃CWB	kW	kW	kW	kW	kW	kW	kW	kW	kW	kW	kW	kW	kW	kW
130%	-24.9	-25.0	48.3	21.17	45.8	19.62	43.2	18.08	42.0	17.36	42.0	17.36	42.0	17.36	42.0	17.36
	-19.8	-20.0	50.8	21.33	48.3	19.80	45.6	18.30	44.3	17.57	44.3	17.57	44.3	17.57	44.3	17.57
	-14.7	-15.0	53.7	21.45	51.2	20.11	48.5	18.63	47.1	17.89	47.1	17.89	47.1	17.89	47.1	17.89
	-9.6	-10.0	57.0	21.45	55.1	20.64	52.2	19.14	50.8	18.41	50.8	18.41	50.8	18.41	50.8	18.41
	-4.4	-5.0	61.2	21.45	60.2	21.45	57.3	19.97	55.8	19.22	55.8	19.22	55.8	19.22	55.8	19.22
	-1.8	-2.5	63.8	21.45	62.8	21.45	60.6	20.53	59.0	19.77	59.0	19.77	59.0	19.77	59.0	19.77
	0.8	0.0	66.8	21.45	65.8	21.45	64.5	21.17	62.9	20.43	62.9	20.43	62.9	20.43	62.9	20.43
	2.8	2.0	69.7	21.45	68.7	21.45	67.7	21.45	66.6	21.04	66.6	21.04	66.6	21.04	66.6	21.04
	6.0	5.0	74.5	21.45	73.1	21.45	70.2	20.53	67.7	19.47	67.7	19.47	67.7	19.47	67.7	19.47
	7.0	6.0	75.9	21.45	74.5	21.45	70.2	19.77	67.7	18.79	67.7	18.79	67.7	18.79	67.7	18.79
	8.6	7.5	78.2	21.45	75.2	20.59	70.2	18.71	67.7	17.82	67.7	17.82	67.7	17.82	67.7	17.82
	11.2	10.0	80.3	20.63	75.2	18.89	70.2	17.23	67.7	16.40	67.7	16.40	67.7	16.40	67.7	16.40
	16.4	15.0	80.3	16.98	75.2	15.49	70.2	14.07	67.7	13.40	67.7	13.40	67.7	13.40	67.7	13.40

Combination(%) :Indoor/outdoor capacity ratio	Outdoor air temp.		Indoor air temp. : ℃CDB													
			15.0		17.0		19.0		20.0		21.0		23.0		25.0	
			TC	PI	TC	PI	TC	PI	TC	PI	TC	PI	TC	PI	TC	PI
	℃CDB	℃CWB	kW	kW	kW	kW	kW	kW	kW	kW	kW	kW	kW	kW	kW	kW
120%	-24.9	-25.0	48.4	20.82	45.9	19.31	43.3	17.84	42.0	17.13	42.0	17.13	42.0	17.13	42.0	17.13
	-19.8	-20.0	50.9	21.00	48.3	19.50	45.7	18.07	44.4	17.34	44.4	17.34	44.4	17.34	44.4	17.34
	-14.7	-15.0	54.0	21.33	51.3	19.85	48.6	18.40	47.2	17.69	47.2	17.69	47.2	17.69	47.2	17.69
	-9.6	-10.0	57.4	21.45	55.2	20.38	52.4	18.93	50.9	18.20	50.9	18.20	50.9	18.20	50.9	18.20
	-4.4	-5.0	61.6	21.45	60.4	21.22	57.4	19.75	55.9	19.01	55.9	19.01	55.9	19.01	55.9	19.01
	-1.8	-2.5	64.2	21.45	63.3	21.45	60.7	20.30	59.1	19.55	59.1	19.55	59.1	19.55	59.1	19.55
	0.8	0.0	67.3	21.45	66.3	21.45	64.6	20.94	62.9	20.20	62.9	20.20	62.9	20.20	62.9	20.20
	2.8	2.0	70.1	21.45	69.0	21.45	68.0	21.45	66.2	20.58	66.2	20.58	66.2	20.58	64.7	18.43
	6.0	5.0	74.5	21.45	73.1	21.45	68.6	19.59	66.2	18.61	66.2	18.61	66.2	18.61	64.7	16.96
	7.0	6.0	75.9	21.45	73.5	20.81	68.6	18.89	66.2	17.99	66.2	17.99	66.2	17.99	64.7	16.47
	8.6	7.5	78.2	21.45	73.5	19.67	68.6	17.94	66.2	17.09	66.2	17.09	66.2	17.09	64.7	15.68
	11.2	10.0	78.4	19.73	73.5	18.10	68.6	16.47	66.2	15.68	66.2	15.68	66.2	15.68	64.7	14.24
	16.4	15.0	78.4	16.12	73.5	14.73	68.6	13.43	66.2	12.79	66.2	12.79	66.2	12.79	64.7	11.65

Combination(%) :Indoor/outdoor capacity ratio	Outdoor air temp.		Indoor air temp. : ℃CDB													
			15.0		17.0		19.0		20.0		21.0		23.0		25.0	
			TC	PI	TC	PI	TC	PI	TC	PI	TC	PI	TC	PI	TC	PI
	℃CDB	℃CWB	kW	kW	kW	kW	kW	kW	kW	kW	kW	kW	kW	kW	kW	kW
110%	-24.9	-25.0	48.4	20.46	45.9	19.01	43.4	17.59	42.1	16.90	42.1	16.90	41.9	16.25	38.9	14.82
	-19.8	-20.0	51.0	20.67	48.4	19.24	45.7	17.82	44.4	17.13	44.4	17.13	44.3	16.50	41.1	15.06
	-14.7	-15.0	54.1	21.04	51.4	19.59	48.7	18.17	47.3	17.47	47.3	17.47	47.3	16.86	44.0	15.41
	-9.6	-10.0	57.9	21.45	55.3	20.13	52.4	18.69	51.0	18.00	51.0	18.00	51.0	18.00	47.6	15.94
	-4.4	-5.0	62.1	21.45	60.5	20.97	57.5	19.52	55.9	18.81	55.9	18.81	55.9	18.81	52.5	16.71
	-1.8	-2.5	64.7	21.45	63.6	21.45	60.7	20.06	59.1	19.34	59.1	19.34	59.1	19.34	55.7	17.23
	0.8	0.0	67.7	21.45	66.7	21.45	64.6	20.71	62.9	19.97	62.9	19.97	62.9	19.97	57.9	17.14
	2.8	2.0	70.5	21.45	69.5	21.45	67.0	20.66	64.6	19.60	64.6	19.60	63.1	18.23	57.9	16.30
	6.0	5.0	74.5	21.45	71.8	20.58	67.0	18.69	64.6	17.80	64.6	17.80	63.1	16.73	57.9	15.05
	7.0	6.0	76.0	21.45	71.8	19.83	67.0	18.07	64.6	17.23	64.6	17.23	63.1	16.24	57.9	14.62
	8.6	7.5	76.5	20.53	71.8	18.79	67.0	17.18	64.6	16.40	64.6	16.40	63.1	15.46	57.9	13.86
	11.2	10.0	76.5	18.86	71.8	17.24	67.0	15.71	64.6	14.97	64.6	14.97	63.1	14.04	57.9	12.59
	16.4	15.0	76.5	15.31	71.8	14.01	67.0	12.79	64.6	12.19	64.6	12.19	63.1	11.45	57.9	10.30

Combination(%) :Indoor/outdoor capacity ratio	Outdoor air temp.		Indoor air temp. : ℃CDB													
			15.0		17.0		19.0		20.0		21.0		23.0		25.0	
			TC	PI	TC	PI	TC	PI	TC	PI	TC	PI	TC	PI	TC	PI
	℃CDB	℃CWB	kW	kW	kW	kW	kW	kW	kW	kW	kW	kW	kW	kW	kW	kW
100%	-24.9	-25.0	48.6	20.13	46.1	18.74	43.5	17.34	42.1	16.67	40.8	16.01	38.1	14.69	35.3	13.41
	-19.8	-20.0	51.2	20.38	48.5	18.98	45.9	17.59	44.5	16.91	43.1	16.24	40.3	14.93	37.4	13.65
	-14.7	-15.0	54.2	20.74	51.5	19.34	48.8	17.95	47.3	17.26	45.9	16.58	43.0	15.26	39.9	13.98
	-9.6	-10.0	58.2	21.30	55.4	19.88	52.5	18.50	51.0	17.80	49.5	17.13	46.4	15.77	43.3	14.45
	-4.4	-5.0	62.6	21.45	60.5	20.72	57.5	19.31	56.0	18.61	54.4	17.90	51.1	16.50	47.8	15.15
	-1.8	-2.5	65.1	21.45	63.9	21.29	60.7	19.83	59.2	19.12	57.5	18.41	54.1	16.98	50.5	15.58
	0.8	0.0	68.2	21.45	67.1	21.45	64.6	20.46	62.9	19.73	60.7	18.76	56.0	16.81	51.3	15.03
	2.8	2.0	70.9	21.45	69.6	21.45	65.3	19.64	63.0	18.66	60.7	17.72	56.0	15.96	51.3	14.31
	6.0	5.0	74.6	21.45	70.0	19.59	65.3	17.85	63.0	17.03	60.7	16.22	56.0	14.69	51.3	13.25
	7.0	6.0	74.7	20.66	70.0	18.91	65.3	17.28	63.0	16.50	60.7	15.72	56.0	14.27	51.3	12.87
	8.6	7.5	74.7	19.57	70.0	17.97	65.3	16.47	63.0	15.74	60.7	15.00	56.0	13.55	51.3	12.18
	11.2	10.0	74.7	17.94	70.0	16.42	65.3	14.97	63.0	14.27	60.7	13.60	56.0	12.29	51.3	11.06
	16.4	15.0	74.7	14.52	70.0	13.32	65.3	12.16	63.0	11.62	60.7	11.07	56.0	10.03	51.3	9.06

1. Capacity Ratio of Outdoor Unit (Standard-COP mode)

U-20ME1E81 (Heating) **Capacity Ratio 30-130%**

TC: Total capacity (kW), PI: Power input (kW)

Combination(%) :Indoor/outdoor capacity ratio	Outdoor air temp.		Indoor air temp. : ℃CDB													
			15.0		17.0		19.0		20.0		21.0		23.0		25.0	
			TC	PI	TC	PI	TC	PI	TC	PI	TC	PI	TC	PI	TC	PI
	℃CDB	℃CWB	kW	kW	kW	kW	kW	kW	kW	kW	kW	kW	kW	kW	kW	kW
90%	-24.9	-25.0	49.0	18.93	46.4	17.67	43.7	16.45	42.4	15.84	41.0	15.25	38.2	14.07	35.4	12.94
	-19.8	-20.0	51.6	19.21	48.9	17.97	46.1	16.71	44.7	16.12	43.3	15.51	40.4	14.32	37.5	13.17
	-14.7	-15.0	54.7	19.64	51.9	18.38	49.1	17.13	47.6	16.50	46.1	15.89	43.1	14.67	40.0	13.48
	-9.6	-10.0	58.7	20.26	55.8	18.96	52.8	17.69	51.2	17.04	49.7	16.42	46.5	15.16	43.2	13.94
	-4.4	-5.0	64.0	21.14	60.9	19.80	57.7	18.48	56.1	17.80	54.4	17.14	50.4	15.56	46.2	14.01
	-1.8	-2.5	66.9	21.45	63.0	19.73	58.8	17.99	56.7	17.14	54.6	16.34	50.4	14.78	46.2	13.35
	0.8	0.0	67.2	20.21	63.0	18.51	58.8	16.93	56.7	16.17	54.6	15.43	50.4	14.03	46.2	12.67
	2.8	2.0	67.2	19.11	63.0	17.56	58.8	16.10	56.7	15.39	54.6	14.72	50.4	13.40	46.2	12.16
	6.0	5.0	67.2	17.47	63.0	16.14	58.8	14.88	56.7	14.26	54.6	13.63	50.4	12.39	46.2	11.20
	7.0	6.0	67.2	16.95	63.0	15.66	58.8	14.37	56.7	13.76	54.6	13.13	50.4	11.95	46.2	10.81
	8.6	7.5	67.2	16.02	63.0	14.77	58.8	13.55	56.7	12.97	54.6	12.39	50.4	11.29	46.2	10.21
	11.2	10.0	67.2	14.44	63.0	13.32	58.8	12.24	56.7	11.72	54.6	11.20	50.4	10.21	46.2	9.26
	16.4	15.0	67.2	11.57	63.0	10.71	58.8	9.87	56.7	9.45	54.6	9.06	50.4	8.28	46.2	7.54

Combination(%) :Indoor/outdoor capacity ratio	Outdoor air temp.		Indoor air temp. : ℃CDB													
			15.0		17.0		19.0		20.0		21.0		23.0		25.0	
			TC	PI	TC	PI	TC	PI	TC	PI	TC	PI	TC	PI	TC	PI
	℃CDB	℃CWB	kW	kW	kW	kW	kW	kW	kW	kW	kW	kW	kW	kW	kW	kW
80%	-24.9	-25.0	49.5	17.90	46.7	16.80	44.0	15.69	42.7	15.16	41.3	14.62	38.4	13.58	35.5	12.57
	-19.8	-20.0	52.1	18.25	49.3	17.13	46.4	16.01	45.0	15.46	43.5	14.92	40.6	13.84	37.6	12.80
	-14.7	-15.0	55.3	18.73	52.4	17.57	49.4	16.42	47.9	15.86	46.4	15.30	43.3	14.19	40.1	13.12
	-9.6	-10.0	59.2	19.37	56.0	18.08	52.3	16.60	50.4	15.89	48.5	15.20	44.8	13.88	41.1	12.62
	-4.4	-5.0	59.7	17.89	56.0	16.53	52.3	15.23	50.4	14.60	48.5	13.98	44.8	12.80	41.1	11.67
	-1.8	-2.5	59.7	17.00	56.0	15.74	52.3	14.52	50.4	13.94	48.5	13.37	44.8	12.24	41.1	11.19
	0.8	0.0	59.7	16.10	56.0	14.93	52.3	13.81	50.4	13.27	48.5	12.74	44.8	11.70	41.1	10.69
	2.8	2.0	59.7	15.38	56.0	14.31	52.3	13.25	50.4	12.72	48.5	12.21	44.8	11.19	41.1	10.21
	6.0	5.0	59.7	14.06	56.0	13.05	52.3	12.06	50.4	11.58	48.5	11.12	44.8	10.20	41.1	9.31
	7.0	6.0	59.7	13.53	56.0	12.56	52.3	11.62	50.4	11.15	48.5	10.71	44.8	9.83	41.1	8.98
	8.6	7.5	59.7	12.71	56.0	11.81	52.3	10.94	50.4	10.51	48.5	10.08	44.8	9.26	41.1	8.46
	11.2	10.0	59.7	11.40	56.0	10.61	52.3	9.83	50.4	9.45	48.5	9.09	44.8	8.37	41.1	7.66
	16.4	15.0	59.7	9.04	56.0	8.43	52.3	7.85	50.4	7.57	48.5	7.29	44.8	6.75	41.1	6.20

Combination(%) :Indoor/outdoor capacity ratio	Outdoor air temp.		Indoor air temp. : ℃CDB													
			15.0		17.0		19.0		20.0		21.0		23.0		25.0	
			TC	PI	TC	PI	TC	PI	TC	PI	TC	PI	TC	PI	TC	PI
	℃CDB	℃CWB	kW	kW	kW	kW	kW	kW	kW	kW	kW	kW	kW	kW	kW	kW
70%	-24.9	-25.0	50.1	17.18	47.4	16.19	44.5	15.21	43.2	14.72	41.7	14.26	38.8	13.33	35.8	12.42
	-19.8	-20.0	52.3	17.28	49.0	16.07	45.7	14.92	44.1	14.37	42.5	13.83	39.2	12.77	35.9	11.78
	-14.7	-15.0	52.3	16.24	49.0	15.13	45.7	14.06	44.1	13.55	42.5	13.04	39.2	12.06	35.9	11.12
	-9.6	-10.0	52.3	15.16	49.0	14.16	45.7	13.17	44.1	12.69	42.5	12.23	39.2	11.32	35.9	10.43
	-4.4	-5.0	52.3	14.06	49.0	13.13	45.7	12.24	44.1	11.81	42.5	11.39	39.2	10.54	35.9	9.72
	-1.8	-2.5	52.3	13.48	49.0	12.62	45.7	11.76	44.1	11.35	42.5	10.94	39.2	10.13	35.9	9.34
	0.8	0.0	52.3	12.80	49.0	11.96	45.7	11.14	44.1	10.74	42.5	10.35	39.2	9.59	35.9	8.84
	2.8	2.0	52.3	12.11	49.0	11.34	45.7	10.56	44.1	10.20	42.5	9.82	39.2	9.09	35.9	8.40
	6.0	5.0	52.3	10.96	49.0	10.26	45.7	9.59	44.1	9.24	42.5	8.91	39.2	8.27	35.9	7.61
	7.0	6.0	52.3	10.51	49.0	9.85	45.7	9.21	44.1	8.89	42.5	8.56	39.2	7.94	35.9	7.33
	8.6	7.5	52.3	9.85	49.0	9.24	45.7	8.65	44.1	8.35	42.5	8.05	39.2	7.47	35.9	6.90
	11.2	10.0	52.3	8.78	49.0	8.25	45.7	7.74	44.1	7.47	42.5	7.23	39.2	6.73	35.9	6.24
	16.4	15.0	52.3	6.88	49.0	6.50	45.7	6.14	44.1	5.96	42.5	5.76	39.2	5.40	35.9	5.03

Combination(%) :Indoor/outdoor capacity ratio	Outdoor air temp.		Indoor air temp. : ℃CDB													
			15.0		17.0		19.0		20.0		21.0		23.0		25.0	
			TC	PI	TC	PI	TC	PI	TC	PI	TC	PI	TC	PI	TC	PI
	℃CDB	℃CWB	kW	kW	kW	kW	kW	kW	kW	kW	kW	kW	kW	kW	kW	kW
60%	-24.9	-25.0	44.8	13.79	42.0	13.02	39.2	12.26	37.8	11.88	36.4	11.52	33.6	10.82	30.8	10.13
	-19.8	-20.0	44.8	13.13	42.0	12.39	39.2	11.68	37.8	11.32	36.4	10.97	33.6	10.30	30.8	9.62
	-14.7	-15.0	44.8	12.49	42.0	11.78	39.2	11.09	37.8	10.76	36.4	10.43	33.6	9.77	30.8	9.12
	-9.6	-10.0	44.8	11.81	42.0	11.14	39.2	10.49	37.8	10.16	36.4	9.85	33.6	9.22	30.8	8.60
	-4.4	-5.0	44.8	10.96	42.0	10.35	39.2	9.75	37.8	9.45	36.4	9.16	33.6	8.58	30.8	8.02
	-1.8	-2.5	44.8	10.41	42.0	9.83	39.2	9.26	37.8	8.98	36.4	8.71	33.6	8.17	30.8	7.62
	0.8	0.0	44.8	9.78	42.0	9.26	39.2	8.73	37.8	8.46	36.4	8.22	33.6	7.69	30.8	7.19
	2.8	2.0	44.8	9.24	42.0	8.75	39.2	8.25	37.8	8.02	36.4	7.77	33.6	7.28	30.8	6.80
	6.0	5.0	44.8	8.30	42.0	7.87	39.2	7.44	37.8	7.21	36.4	7.00	33.6	6.55	30.8	6.11
	7.0	6.0	44.8	7.95	42.0	7.54	39.2	7.13	37.8	6.91	36.4	6.72	33.6	6.29	30.8	5.87
	8.6	7.5	44.8	7.43	42.0	7.05	39.2	6.67	37.8	6.48	36.4	6.30	33.6	5.91	30.8	5.53
	11.2	10.0	44.8	6.58	42.0	6.27	39.2	5.96	37.8	5.79	36.4	5.64	33.6	5.31	30.8	4.98
	16.4	15.0	44.8	5.48	42.0	5.20	39.2	4.92	37.8	4.77	36.4	4.64	33.6	4.36	30.8	4.08

1. Capacity Ratio of Outdoor Unit (Standard-COP mode)

U-20ME1E81 (Heating)

Capacity Ratio 30-130%

TC: Total capacity (kW), PI: Power input (kW)

Combination(%) :Indoor/outdoor capacity ratio	Outdoor air temp.		Indoor air temp. : ℃CDB													
			15.0		17.0		19.0		20.0		21.0		23.0		25.0	
			TC	PI	TC	PI	TC	PI	TC	PI	TC	PI	TC	PI	TC	PI
	℃CDB	℃CWB	kW	kW	kW	kW	kW	kW	kW	kW	kW	kW	kW	kW	kW	kW
50%	-24.9	-25.0	37.4	10.49	35.0	10.03	32.7	9.57	31.5	9.34	30.3	9.12	28.0	8.68	25.6	8.23
	-19.8	-20.0	37.4	10.08	35.0	9.62	32.7	9.17	31.5	8.94	30.3	8.73	28.0	8.28	25.6	7.85
	-14.7	-15.0	37.4	9.62	35.0	9.21	32.7	8.76	31.5	8.55	30.3	8.32	28.0	7.89	25.6	7.46
	-9.6	-10.0	37.4	8.99	35.0	8.61	32.7	8.23	31.5	8.04	30.3	7.85	28.0	7.46	25.6	7.05
	-4.4	-5.0	37.4	8.23	35.0	7.89	32.7	7.54	31.5	7.38	30.3	7.19	28.0	6.83	25.6	6.48
	-1.8	-2.5	37.4	7.79	35.0	7.47	32.7	7.14	31.5	6.98	30.3	6.81	28.0	6.48	25.6	6.14
	0.8	0.0	37.4	7.29	35.0	7.00	32.7	6.70	31.5	6.55	30.3	6.40	28.0	6.09	25.6	5.76
	2.8	2.0	37.4	6.86	35.0	6.58	32.7	6.30	31.5	6.17	30.3	6.02	28.0	5.73	25.6	5.38
	6.0	5.0	37.4	6.11	35.0	5.87	32.7	5.61	31.5	5.49	30.3	5.36	28.0	5.08	25.6	4.80
	7.0	6.0	37.4	5.82	35.0	5.61	32.7	5.38	31.5	5.26	30.3	5.13	28.0	4.88	25.6	4.62
	8.6	7.5	37.4	5.43	35.0	5.23	32.7	5.03	31.5	4.92	30.3	4.82	28.0	4.59	25.6	4.34
	11.2	10.0	37.4	4.77	35.0	4.62	32.7	4.47	31.5	4.39	30.3	4.29	28.0	4.11	25.6	3.93
	16.4	15.0	37.4	4.74	35.0	4.49	32.7	4.26	31.5	4.14	30.3	4.03	28.0	3.80	25.6	3.56

Combination(%) :Indoor/outdoor capacity ratio	Outdoor air temp.		Indoor air temp. : ℃CDB													
			15.0		17.0		19.0		20.0		21.0		23.0		25.0	
			TC	PI	TC	PI	TC	PI	TC	PI	TC	PI	TC	PI	TC	PI
	℃CDB	℃CWB	kW	kW	kW	kW	kW	kW	kW	kW	kW	kW	kW	kW	kW	kW
40%	-24.9	-25.0	29.9	8.00	28.0	7.74	26.1	7.46	25.2	7.33	24.3	7.19	22.4	6.91	20.5	6.65
	-19.8	-20.0	29.9	7.62	28.0	7.41	26.1	7.16	25.2	7.03	24.3	6.90	22.4	6.62	20.5	6.34
	-14.7	-15.0	29.9	7.19	28.0	7.00	26.1	6.78	25.2	6.68	24.3	6.57	22.4	6.30	20.5	6.02
	-9.6	-10.0	29.9	6.68	28.0	6.50	26.1	6.32	25.2	6.22	24.3	6.11	22.4	5.89	20.5	5.66
	-4.4	-5.0	29.9	6.06	28.0	5.91	26.1	5.74	25.2	5.66	24.3	5.56	22.4	5.38	20.5	5.16
	-1.8	-2.5	29.9	5.69	28.0	5.56	26.1	5.41	25.2	5.33	24.3	5.25	22.4	5.07	20.5	4.83
	0.8	0.0	29.9	5.30	28.0	5.18	26.1	5.03	25.2	4.97	24.3	4.88	22.4	4.67	20.5	4.44
	2.8	2.0	29.9	4.95	28.0	4.83	26.1	4.69	25.2	4.60	24.3	4.50	22.4	4.32	20.5	4.13
	6.0	5.0	29.9	4.32	28.0	4.22	26.1	4.13	25.2	4.06	24.3	3.99	22.4	3.84	20.5	3.70
	7.0	6.0	29.9	4.13	28.0	4.04	26.1	3.94	25.2	3.88	24.3	3.83	22.4	3.70	20.5	3.55
	8.6	7.5	29.9	3.98	28.0	3.80	26.1	3.68	25.2	3.63	24.3	3.58	22.4	3.47	20.5	3.35
	11.2	10.0	29.9	3.98	28.0	3.80	26.1	3.61	25.2	3.51	24.3	3.42	22.4	3.23	20.5	3.05
	16.4	15.0	29.9	3.98	28.0	3.80	26.1	3.61	25.2	3.51	24.3	3.42	22.4	3.23	20.5	3.05

Combination(%) :Indoor/outdoor capacity ratio	Outdoor air temp.		Indoor air temp. : ℃CDB													
			15.0		17.0		19.0		20.0		21.0		23.0		25.0	
			TC	PI	TC	PI	TC	PI	TC	PI	TC	PI	TC	PI	TC	PI
	℃CDB	℃CWB	kW	kW	kW	kW	kW	kW	kW	kW	kW	kW	kW	kW	kW	kW
30%	-24.9	-25.0	22.4	5.94	21.0	5.86	19.6	5.71	18.9	5.63	18.2	5.56	16.8	5.40	15.4	5.23
	-19.8	-20.0	22.4	5.64	21.0	5.56	19.6	5.46	18.9	5.41	18.2	5.33	16.8	5.15	15.4	4.98
	-14.7	-15.0	22.4	5.30	21.0	5.23	19.6	5.15	18.9	5.10	18.2	5.03	16.8	4.92	15.4	4.74
	-9.6	-10.0	22.4	4.88	21.0	4.83	19.6	4.77	18.9	4.72	18.2	4.67	16.8	4.57	15.4	4.44
	-4.4	-5.0	22.4	4.39	21.0	4.34	19.6	4.29	18.9	4.26	18.2	4.19	16.8	4.04	15.4	3.88
	-1.8	-2.5	22.4	4.09	21.0	4.04	19.6	3.94	18.9	3.89	18.2	3.84	16.8	3.71	15.4	3.58
	0.8	0.0	22.4	3.71	21.0	3.66	19.6	3.60	18.9	3.55	18.2	3.50	16.8	3.40	15.4	3.28
	2.8	2.0	22.4	3.40	21.0	3.37	19.6	3.32	18.9	3.28	18.2	3.25	16.8	3.17	15.4	3.07
	6.0	5.0	22.4	3.23	21.0	3.10	19.6	2.95	18.9	2.90	18.2	2.89	16.8	2.82	15.4	2.76
	7.0	6.0	22.4	3.23	21.0	3.10	19.6	2.95	18.9	2.89	18.2	2.82	16.8	2.72	15.4	2.66
	8.6	7.5	22.4	3.23	21.0	3.10	19.6	2.95	18.9	2.89	18.2	2.82	16.8	2.67	15.4	2.54
	11.2	10.0	22.4	3.23	21.0	3.10	19.6	2.95	18.9	2.89	18.2	2.82	16.8	2.67	15.4	2.54
	16.4	15.0	22.4	3.23	21.0	3.10	19.6	2.95	18.9	2.89	18.2	2.82	16.8	2.67	15.4	2.54

2. Capacity Raito of Outdoor Unit (High-COP mode)

2-1. U-14ME1E81 (Cooling)

Capacity Ratio 30-130%

TC: Total capacity (kW), PI: Power input (kW)

Combination(%) :Indoor/outdoor capacity ratio	Outdoor air temp. °C DB	Indoor air temp. :℃WB													
		16.0		17.0		18.0		19.0		20.0		21.0		22.0	
		TC	PI	TC	PI	TC	PI	TC	PI	TC	PI	TC	PI	TC	PI
		kW	kW	kW	kW	kW	kW	kW	kW	kW	kW	kW	kW	kW	kW
130% or more	-10.0	30.1	3.47	30.1	3.47	30.1	3.47	30.1	3.47	32.1	3.70	34.1	3.93	36.1	4.17
	-5.0	30.1	3.47	30.1	3.47	30.1	3.47	30.1	3.47	32.1	3.71	34.1	3.94	36.1	4.17
	0.0	30.1	3.48	30.1	3.48	30.1	3.48	30.1	3.48	32.1	3.72	34.1	3.95	36.1	4.19
	5.0	30.1	3.50	30.1	3.50	30.1	3.50	30.1	3.50	32.1	3.74	34.1	3.98	36.1	4.22
	10.0	30.1	3.54	30.1	3.54	30.1	3.54	30.1	3.54	32.1	3.79	34.1	4.04	36.1	4.28
	15.0	30.1	3.65	30.1	3.65	30.1	3.65	30.1	3.65	32.1	3.91	34.1	4.18	36.1	4.45
	20.0	30.1	4.11	30.1	4.11	30.1	4.11	30.1	4.11	32.1	4.52	34.1	4.95	36.1	5.40
	25.0	30.1	5.18	30.1	5.18	30.1	5.18	30.1	5.18	32.1	5.67	34.1	6.20	36.1	6.73
	30.0	30.1	6.34	30.1	6.34	30.1	6.34	30.1	6.34	32.1	6.93	34.1	7.56	36.1	8.20
	35.0	30.1	7.62	30.1	7.62	30.1	7.62	30.1	7.62	32.1	8.31	34.0	8.97	34.7	8.97
	40.0	29.9	8.92	29.9	8.92	29.9	8.92	29.9	8.92	30.7	8.97	31.4	8.97	32.1	8.97
	43.0	28.6	8.97	28.6	8.97	28.6	8.97	28.6	8.97	29.3	8.97	29.9	8.97	30.6	8.97

Combination(%) :Indoor/outdoor capacity ratio	Outdoor air temp. °C DB	Indoor air temp. :℃WB													
		16.0		17.0		18.0		19.0		20.0		21.0		22.0	
		TC	PI	TC	PI	TC	PI	TC	PI	TC	PI	TC	PI	TC	PI
		kW	kW	kW	kW	kW	kW	kW	kW	kW	kW	kW	kW	kW	kW
120%	-10.0	28.2	3.25	29.4	3.39	29.4	3.39	29.4	3.39	31.4	3.62	33.3	3.84	35.3	4.06
	-5.0	28.2	3.25	29.4	3.39	29.4	3.39	29.4	3.39	31.4	3.62	33.3	3.85	35.3	4.08
	0.0	28.2	3.26	29.4	3.40	29.4	3.40	29.4	3.40	31.4	3.63	33.3	3.86	35.3	4.09
	5.0	28.2	3.26	29.4	3.42	29.4	3.42	29.4	3.42	31.4	3.65	33.3	3.88	35.3	4.12
	10.0	28.2	3.28	29.4	3.46	29.4	3.46	29.4	3.46	31.4	3.70	33.3	3.94	35.3	4.18
	15.0	28.2	3.34	29.4	3.55	29.4	3.55	29.4	3.55	31.4	3.82	33.3	4.08	35.3	4.34
	20.0	28.2	3.54	29.4	3.97	29.4	3.97	29.4	3.97	31.4	4.36	33.3	4.77	35.3	5.20
	25.0	28.2	4.37	29.4	5.01	29.4	5.01	29.4	5.01	31.4	5.48	33.3	5.98	35.3	6.50
	30.0	28.2	5.41	29.4	6.13	29.4	6.13	29.4	6.13	31.4	6.71	33.3	7.30	35.3	7.92
	35.0	28.2	6.55	29.4	7.38	29.4	7.38	29.4	7.38	31.4	8.05	33.3	8.74	34.4	8.97
	40.0	28.2	7.78	29.4	8.71	29.4	8.71	29.4	8.71	30.5	8.97	31.2	8.97	31.8	8.97
	43.0	28.2	8.56	28.4	8.97	28.4	8.97	28.4	8.97	29.1	8.97	29.7	8.97	30.4	8.97

Combination(%) :Indoor/outdoor capacity ratio	Outdoor air temp. °C DB	Indoor air temp. :℃WB													
		16.0		17.0		18.0		19.0		20.0		21.0		22.0	
		TC	PI	TC	PI	TC	PI	TC	PI	TC	PI	TC	PI	TC	PI
		kW	kW	kW	kW	kW	kW	kW	kW	kW	kW	kW	kW	kW	kW
110%	-10.0	25.3	2.90	27.4	3.15	28.7	3.31	28.7	3.31	30.6	3.53	32.5	3.75	34.4	3.97
	-5.0	25.3	2.91	27.4	3.15	28.7	3.31	28.7	3.31	30.6	3.53	32.5	3.75	34.4	3.97
	0.0	25.3	2.91	27.4	3.16	28.7	3.32	28.7	3.32	30.6	3.54	32.5	3.77	34.4	3.99
	5.0	25.3	2.93	27.4	3.17	28.7	3.33	28.7	3.33	30.6	3.56	32.5	3.79	34.4	4.02
	10.0	25.3	2.94	27.4	3.19	28.7	3.37	28.7	3.37	30.6	3.60	32.5	3.84	34.4	4.08
	15.0	25.3	2.99	27.4	3.26	28.7	3.46	28.7	3.46	30.6	3.71	32.5	3.97	34.4	4.22
	20.0	25.3	3.18	27.4	3.49	28.7	3.84	28.7	3.84	30.6	4.20	32.5	4.60	34.4	5.00
	25.0	25.3	3.93	27.4	4.35	28.7	4.84	28.7	4.84	30.6	5.29	32.5	5.77	34.4	6.27
	30.0	25.3	4.84	27.4	5.37	28.7	5.93	28.7	5.93	30.6	6.48	32.5	7.05	34.4	7.65
	35.0	25.3	5.85	27.4	6.47	28.7	7.13	28.7	7.13	30.6	7.78	32.5	8.45	34.1	8.97
	40.0	25.3	6.95	27.4	7.68	28.7	8.42	28.7	8.42	30.3	8.97	30.9	8.97	31.6	8.97
	43.0	25.3	7.65	27.4	8.44	28.2	8.97	28.2	8.97	28.9	8.97	29.5	8.97	30.1	8.97

2. Capacity Raito of Outdoor Unit (High-COP mode)

U-14ME1E81 (Cooling) **Capacity Ratio 30-130%**

TC: Total capacity (kW), PI: Power input (kW)

Combination(%) :Indoor/outdoor capacity ratio	Outdoor air temp. °C DB	Indoor air temp. :°CWB													
		16.0		17.0		18.0		19.0		20.0		21.0		22.0	
		TC	PI	TC	PI	TC	PI	TC	PI	TC	PI	TC	PI	TC	PI
		kW	kW	kW	kW	kW	kW	kW	kW	kW	kW	kW	kW	kW	kW
100%	-10.0	22.4	2.58	24.3	2.79	26.1	3.01	28.0	3.22	29.9	3.44	31.7	3.66	33.6	3.87
	-5.0	22.4	2.58	24.3	2.79	26.1	3.02	28.0	3.23	29.9	3.44	31.7	3.66	33.6	3.88
	0.0	22.4	2.59	24.3	2.80	26.1	3.02	28.0	3.24	29.9	3.46	31.7	3.67	33.6	3.89
	5.0	22.4	2.59	24.3	2.82	26.1	3.03	28.0	3.25	29.9	3.47	31.7	3.69	33.6	3.92
	10.0	22.4	2.62	24.3	2.84	26.1	3.06	28.0	3.28	29.9	3.51	31.7	3.74	33.6	3.97
	15.0	22.4	2.66	24.3	2.90	26.1	3.13	28.0	3.37	29.9	3.62	31.7	3.86	33.6	4.11
	20.0	22.4	2.84	24.3	3.11	26.1	3.39	28.0	3.70	29.9	4.05	31.7	4.42	33.6	4.82
	25.0	22.4	3.49	24.3	3.86	26.1	4.26	28.0	4.67	29.9	5.11	31.7	5.56	33.6	6.04
	30.0	22.4	4.31	24.3	4.76	26.1	5.24	28.0	5.73	29.9	6.26	31.7	6.80	33.6	7.37
	35.0	22.4	5.20	24.3	5.74	26.1	6.31	28.0	6.90	29.9	7.51	31.7	8.16	33.6	8.83
	40.0	22.4	6.16	24.3	6.80	26.1	7.47	28.0	8.16	29.9	8.87	30.7	8.97	31.3	8.97
	43.0	22.4	6.78	24.3	7.47	26.1	8.20	28.0	8.96	28.6	8.97	29.3	8.97	29.9	8.97

Combination(%) :Indoor/outdoor capacity ratio	Outdoor air temp. °C DB	Indoor air temp. :°CWB													
		16.0		17.0		18.0		19.0		20.0		21.0		22.0	
		TC	PI	TC	PI	TC	PI	TC	PI	TC	PI	TC	PI	TC	PI
		kW	kW	kW	kW	kW	kW	kW	kW	kW	kW	kW	kW	kW	kW
90%	-10.0	20.2	2.32	21.8	2.51	23.5	2.70	25.2	2.90	26.9	3.10	28.6	3.29	30.2	3.48
	-5.0	20.2	2.33	21.8	2.52	23.5	2.71	25.2	2.90	26.9	3.10	28.6	3.29	30.2	3.49
	0.0	20.2	2.33	21.8	2.52	23.5	2.72	25.2	2.91	26.9	3.11	28.6	3.31	30.2	3.50
	5.0	20.2	2.33	21.8	2.53	23.5	2.73	25.2	2.92	26.9	3.12	28.6	3.32	30.2	3.52
	10.0	20.2	2.35	21.8	2.55	23.5	2.75	25.2	2.95	26.9	3.15	28.6	3.35	30.2	3.55
	15.0	20.2	2.38	21.8	2.59	23.5	2.80	25.2	3.01	26.9	3.22	28.6	3.44	30.2	3.66
	20.0	20.2	2.51	21.8	2.75	23.5	2.99	25.2	3.24	26.9	3.50	28.6	3.79	30.2	4.11
	25.0	20.2	3.06	21.8	3.37	23.5	3.70	25.2	4.04	26.9	4.40	28.6	4.78	30.2	5.17
	30.0	20.2	3.78	21.8	4.16	23.5	4.56	25.2	4.97	26.9	5.41	28.6	5.87	30.2	6.33
	35.0	20.2	4.56	21.8	5.02	23.5	5.50	25.2	6.00	26.9	6.51	28.6	7.05	30.2	7.61
	40.0	20.2	5.42	21.8	5.96	23.5	6.52	25.2	7.11	26.9	7.71	28.6	8.34	30.0	8.92
	43.0	20.2	5.96	21.8	6.56	23.5	7.17	25.2	7.81	26.9	8.47	28.3	8.97	28.9	8.97

Combination(%) :Indoor/outdoor capacity ratio	Outdoor air temp. °C DB	Indoor air temp. :°CWB													
		16.0		17.0		18.0		19.0		20.0		21.0		22.0	
		TC	PI	TC	PI	TC	PI	TC	PI	TC	PI	TC	PI	TC	PI
		kW	kW	kW	kW	kW	kW	kW	kW	kW	kW	kW	kW	kW	kW
80%	-10.0	17.9	2.06	19.4	2.24	20.9	2.41	22.4	2.58	23.9	2.75	25.4	2.93	26.9	3.10
	-5.0	17.9	2.06	19.4	2.24	20.9	2.41	22.4	2.58	23.9	2.75	25.4	2.93	26.9	3.10
	0.0	17.9	2.06	19.4	2.24	20.9	2.42	22.4	2.59	23.9	2.76	25.4	2.93	26.9	3.11
	5.0	17.9	2.07	19.4	2.24	20.9	2.42	22.4	2.59	23.9	2.77	25.4	2.95	26.9	3.12
	10.0	17.9	2.08	19.4	2.26	20.9	2.44	22.4	2.61	23.9	2.79	25.4	2.97	26.9	3.15
	15.0	17.9	2.10	19.4	2.29	20.9	2.47	22.4	2.66	23.9	2.84	25.4	3.03	26.9	3.22
	20.0	17.9	2.20	19.4	2.40	20.9	2.61	22.4	2.82	23.9	3.04	25.4	3.26	26.9	3.48
	25.0	17.9	2.66	19.4	2.91	20.9	3.18	22.4	3.46	23.9	3.75	25.4	4.06	26.9	4.38
	30.0	17.9	3.28	19.4	3.60	20.9	3.93	22.4	4.27	23.9	4.63	25.4	5.00	26.9	5.38
	35.0	17.9	3.97	19.4	4.35	20.9	4.75	22.4	5.16	23.9	5.59	25.4	6.03	26.9	6.49
	40.0	17.9	4.71	19.4	5.17	20.9	5.64	22.4	6.12	23.9	6.62	25.4	7.14	26.9	7.67
	43.0	17.9	5.19	19.4	5.69	20.9	6.20	22.4	6.73	23.9	7.28	25.4	7.85	26.9	8.43

Combination(%) :Indoor/outdoor capacity ratio	Outdoor air temp. °C DB	Indoor air temp. :°CWB													
		16.0		17.0		18.0		19.0		20.0		21.0		22.0	
		TC	PI	TC	PI	TC	PI	TC	PI	TC	PI	TC	PI	TC	PI
		kW	kW	kW	kW	kW	kW	kW	kW	kW	kW	kW	kW	kW	kW
70%	-10.0	15.7	1.80	17.0	1.95	18.3	2.10	19.6	2.26	20.9	2.41	22.2	2.56	23.5	2.70
	-5.0	15.7	1.81	17.0	1.96	18.3	2.10	19.6	2.26	20.9	2.41	22.2	2.56	23.5	2.71
	0.0	15.7	1.81	17.0	1.96	18.3	2.11	19.6	2.26	20.9	2.42	22.2	2.57	23.5	2.72
	5.0	15.7	1.81	17.0	1.96	18.3	2.11	19.6	2.26	20.9	2.42	22.2	2.57	23.5	2.73
	10.0	15.7	1.81	17.0	1.97	18.3	2.13	19.6	2.28	20.9	2.44	22.2	2.59	23.5	2.75
	15.0	15.7	1.84	17.0	1.99	18.3	2.15	19.6	2.31	20.9	2.47	22.2	2.63	23.5	2.79
	20.0	15.7	1.90	17.0	2.07	18.3	2.25	19.6	2.42	20.9	2.61	22.2	2.79	23.5	2.97
	25.0	15.7	2.28	17.0	2.49	18.3	2.70	19.6	2.93	20.9	3.17	22.2	3.41	23.5	3.66
	30.0	15.7	2.82	17.0	3.08	18.3	3.35	19.6	3.62	20.9	3.91	22.2	4.21	23.5	4.51
	35.0	15.7	3.41	17.0	3.72	18.3	4.04	19.6	4.38	20.9	4.73	22.2	5.08	23.5	5.45
	40.0	15.7	4.05	17.0	4.42	18.3	4.80	19.6	5.20	20.9	5.61	22.2	6.03	23.5	6.47
	43.0	15.7	4.46	17.0	4.86	18.3	5.29	19.6	5.73	20.9	6.18	22.2	6.63	23.5	7.11

2. Capacity Raito of Outdoor Unit (High-COP mode)

U-14ME1E81 (Cooling) **Capacity Ratio 30-130%**

TC: Total capacity (kW), PI: Power input (kW)

Combination(%) :Indoor/outdoor capacity ratio	Outdoor air temp. °C DB	Indoor air temp. :°CWB													
		16.0		17.0		18.0		19.0		20.0		21.0		22.0	
		TC	PI	TC	PI	TC	PI	TC	PI	TC	PI	TC	PI	TC	PI
		kW	kW	kW	kW	kW	kW	kW	kW	kW	kW	kW	kW	kW	kW
60%	-10.0	13.4	1.55	14.6	1.68	15.7	1.80	16.8	1.93	17.9	2.06	19.0	2.19	20.2	2.32
	-5.0	13.4	1.55	14.6	1.68	15.7	1.81	16.8	1.93	17.9	2.06	19.0	2.19	20.2	2.33
	0.0	13.4	1.55	14.6	1.68	15.7	1.81	16.8	1.94	17.9	2.06	19.0	2.19	20.2	2.33
	5.0	13.4	1.55	14.6	1.68	15.7	1.81	16.8	1.94	17.9	2.07	19.0	2.20	20.2	2.33
	10.0	13.4	1.55	14.6	1.68	15.7	1.81	16.8	1.95	17.9	2.08	19.0	2.21	20.2	2.35
	15.0	13.4	1.57	14.6	1.70	15.7	1.84	16.8	1.97	17.9	2.10	19.0	2.24	20.2	2.38
	20.0	13.4	1.61	14.6	1.75	15.7	1.90	16.8	2.04	17.9	2.19	19.0	2.34	20.2	2.49
	25.0	13.4	1.90	14.6	2.11	15.7	2.27	16.8	2.45	17.9	2.63	19.0	2.82	20.2	3.01
	30.0	13.4	2.39	14.6	2.59	15.7	2.81	16.8	3.03	17.9	3.25	19.0	3.48	20.2	3.72
	35.0	13.4	2.88	14.6	3.13	15.7	3.39	16.8	3.66	17.9	3.93	19.0	4.21	20.2	4.50
	40.0	13.4	3.42	14.6	3.72	15.7	4.03	16.8	4.35	17.9	4.67	19.0	5.00	20.2	5.34
	43.0	13.4	3.77	14.6	4.10	15.7	4.44	16.8	4.78	17.9	5.14	19.0	5.51	20.2	5.88

Combination(%) :Indoor/outdoor capacity ratio	Outdoor air temp. °C DB	Indoor air temp. :°CWB													
		16.0		17.0		18.0		19.0		20.0		21.0		22.0	
		TC	PI	TC	PI	TC	PI	TC	PI	TC	PI	TC	PI	TC	PI
		kW	kW	kW	kW	kW	kW	kW	kW	kW	kW	kW	kW	kW	kW
50%	-10.0	11.2	1.29	12.1	1.39	13.1	1.50	14.0	1.61	14.9	1.72	15.9	1.83	16.8	1.93
	-5.0	11.2	1.29	12.1	1.39	13.1	1.50	14.0	1.61	14.9	1.72	15.9	1.83	16.8	1.93
	0.0	11.2	1.29	12.1	1.40	13.1	1.50	14.0	1.61	14.9	1.72	15.9	1.83	16.8	1.94
	5.0	11.2	1.29	12.1	1.40	13.1	1.51	14.0	1.61	14.9	1.73	15.9	1.84	16.8	1.94
	10.0	11.2	1.30	12.1	1.40	13.1	1.51	14.0	1.62	14.9	1.73	15.9	1.84	16.8	1.95
	15.0	11.2	1.30	12.1	1.41	13.1	1.52	14.0	1.64	14.9	1.75	15.9	1.86	16.8	1.97
	20.0	11.2	1.32	12.1	1.44	13.1	1.56	14.0	1.68	14.9	1.79	15.9	1.92	16.8	2.04
	25.0	11.2	1.50	12.1	1.66	13.1	1.81	14.0	1.98	14.9	2.15	15.9	2.28	16.8	2.43
	30.0	11.2	1.99	12.1	2.15	13.1	2.31	14.0	2.48	14.9	2.65	15.9	2.82	16.8	3.00
	35.0	11.2	2.39	12.1	2.59	13.1	2.79	14.0	2.99	14.9	3.20	15.9	3.41	16.8	3.63
	40.0	11.2	2.84	12.1	3.07	13.1	3.31	14.0	3.55	14.9	3.80	15.9	4.06	16.8	4.31
	43.0	11.2	3.11	12.1	3.37	13.1	3.64	14.0	3.91	14.9	4.18	15.9	4.46	16.8	4.75

Combination(%) :Indoor/outdoor capacity ratio	Outdoor air temp. °C DB	Indoor air temp. :°CWB													
		16.0		17.0		18.0		19.0		20.0		21.0		22.0	
		TC	PI	TC	PI	TC	PI	TC	PI	TC	PI	TC	PI	TC	PI
		kW	kW	kW	kW	kW	kW	kW	kW	kW	kW	kW	kW	kW	kW
40%	-10.0	9.0	1.03	9.7	1.12	10.4	1.20	11.2	1.29	12.0	1.37	12.7	1.46	13.4	1.55
	-5.0	9.0	1.03	9.7	1.12	10.4	1.20	11.2	1.29	12.0	1.37	12.7	1.46	13.4	1.55
	0.0	9.0	1.04	9.7	1.12	10.4	1.21	11.2	1.29	12.0	1.37	12.7	1.46	13.4	1.55
	5.0	9.0	1.04	9.7	1.12	10.4	1.21	11.2	1.29	12.0	1.38	12.7	1.46	13.4	1.55
	10.0	9.0	1.04	9.7	1.12	10.4	1.21	11.2	1.30	12.0	1.38	12.7	1.47	13.4	1.55
	15.0	9.0	1.04	9.7	1.12	10.4	1.21	11.2	1.30	12.0	1.39	12.7	1.48	13.4	1.57
	20.0	9.0	1.06	9.7	1.15	10.4	1.24	11.2	1.32	12.0	1.41	12.7	1.51	13.4	1.60
	25.0	9.0	1.15	9.7	1.26	10.4	1.37	11.2	1.48	12.0	1.60	12.7	1.73	13.4	1.85
	30.0	9.0	1.63	9.7	1.74	10.4	1.86	11.2	1.98	12.0	2.10	12.7	2.23	13.4	2.35
	35.0	9.0	1.94	9.7	2.08	10.4	2.23	11.2	2.38	12.0	2.53	12.7	2.68	13.4	2.84
	40.0	9.0	2.28	9.7	2.46	10.4	2.64	11.2	2.82	12.0	3.00	12.7	3.19	13.4	3.37
	43.0	9.0	2.50	9.7	2.70	10.4	2.90	11.2	3.10	12.0	3.30	12.7	3.51	13.4	3.72

Combination(%) :Indoor/outdoor capacity ratio	Outdoor air temp. °C DB	Indoor air temp. :°CWB													
		16.0		17.0		18.0		19.0		20.0		21.0		22.0	
		TC	PI	TC	PI	TC	PI	TC	PI	TC	PI	TC	PI	TC	PI
		kW	kW	kW	kW	kW	kW	kW	kW	kW	kW	kW	kW	kW	kW
30%	-10.0	6.7	0.77	7.3	0.83	7.8	0.90	8.4	0.97	9.0	1.03	9.5	1.10	10.1	1.16
	-5.0	6.7	0.77	7.3	0.83	7.8	0.90	8.4	0.97	9.0	1.03	9.5	1.10	10.1	1.16
	0.0	6.7	0.77	7.3	0.83	7.8	0.90	8.4	0.97	9.0	1.04	9.5	1.10	10.1	1.16
	5.0	6.7	0.77	7.3	0.84	7.8	0.90	8.4	0.97	9.0	1.04	9.5	1.10	10.1	1.16
	10.0	6.7	0.77	7.3	0.84	7.8	0.90	8.4	0.97	9.0	1.04	9.5	1.10	10.1	1.17
	15.0	6.7	0.78	7.3	0.84	7.8	0.91	8.4	0.97	9.0	1.04	9.5	1.10	10.1	1.17
	20.0	6.7	0.79	7.3	0.85	7.8	0.92	8.4	0.99	9.0	1.05	9.5	1.12	10.1	1.19
	25.0	6.7	0.83	7.3	0.90	7.8	0.98	8.4	1.06	9.0	1.13	9.5	1.21	10.1	1.30
	30.0	6.7	1.28	7.3	1.37	7.8	1.45	8.4	1.52	9.0	1.61	9.5	1.69	10.1	1.78
	35.0	6.7	1.52	7.3	1.61	7.8	1.72	8.4	1.82	9.0	1.93	9.5	2.03	10.1	2.13
	40.0	6.7	1.77	7.3	1.89	7.8	2.01	8.4	2.14	9.0	2.26	9.5	2.39	10.1	2.52
	43.0	6.7	1.93	7.3	2.07	7.8	2.21	8.4	2.35	9.0	2.48	9.5	2.63	10.1	2.77

2. Capacity Raito of Outdoor Unit (High-COP mode)

2-2. U-14ME1E81 (Heatling)

Capacity Ratio 30-130%

TC: Total capacity (kW), PI: Power input (kW)

Combination(%) :Indoor/outdoor capacity ratio	Outdoor air temp.		Indoor air temp. : °CWB													
			15.0		17.0		19.0		20.0		21.0		23.0		25.0	
			TC	PI	TC	PI	TC	PI	TC	PI	TC	PI	TC	PI	TC	PI
	°CDB	°CWB	kW	kW	kW	kW	kW	kW	kW	kW	kW	kW	kW	kW	kW	kW
130% or more	-24.9	-25.0	26.0	9.20	25.5	9.20	25.1	9.20	25.0	9.20	25.0	9.20	25.0	9.20	25.0	9.20
	-19.8	-20.0	27.6	9.20	27.1	9.20	26.6	9.20	26.4	9.20	26.4	9.20	26.4	9.20	26.4	9.20
	-14.7	-15.0	29.3	9.20	28.7	9.20	28.2	9.20	27.9	9.20	27.9	9.20	27.9	9.20	27.9	9.20
	-9.6	-10.0	31.1	9.20	30.5	9.20	29.9	9.20	29.5	9.20	29.5	9.20	29.5	9.20	29.5	9.20
	-4.4	-5.0	33.0	9.20	32.3	9.20	31.7	9.20	31.3	9.20	31.3	9.20	31.3	9.20	31.3	9.20
	-1.8	-2.5	34.0	9.20	33.3	9.20	32.6	9.20	32.3	9.20	32.3	9.20	32.3	9.20	32.3	9.20
	0.8	0.0	35.1	9.20	34.4	9.20	33.7	9.20	33.4	9.20	33.4	9.20	33.4	9.20	33.4	9.20
	2.8	2.0	36.1	9.20	35.4	9.20	34.7	9.20	33.9	8.98	33.9	8.98	33.9	8.98	33.9	8.98
	6.0	5.0	37.8	9.20	37.0	9.20	35.1	8.69	33.9	8.33	33.9	8.33	33.9	8.33	33.9	8.33
	7.0	6.0	38.5	9.20	37.6	9.18	35.1	8.43	33.9	8.06	33.9	8.06	33.9	8.06	33.9	8.06
	8.6	7.5	39.6	9.20	37.6	8.69	35.1	7.97	33.9	7.63	33.9	7.63	33.9	7.63	33.9	7.63
	11.2	10.0	40.1	8.56	37.6	7.89	35.1	7.24	33.9	6.92	33.9	6.92	33.9	6.92	33.9	6.92
	16.4	15.0	40.1	6.96	37.6	6.42	35.1	5.90	33.9	5.64	33.9	5.64	33.9	5.64	33.9	5.64

Combination(%) :Indoor/outdoor capacity ratio	Outdoor air temp.		Indoor air temp. : °CWB													
			15.0		17.0		19.0		20.0		21.0		23.0		25.0	
			TC	PI	TC	PI	TC	PI	TC	PI	TC	PI	TC	PI	TC	PI
	°CDB	°CWB	kW	kW	kW	kW	kW	kW	kW	kW	kW	kW	kW	kW	kW	kW
120%	-24.9	-25.0	26.1	9.20	25.7	9.20	25.3	9.20	25.1	9.20	25.1	9.20	25.1	9.20	25.1	9.20
	-19.8	-20.0	27.7	9.20	27.2	9.20	26.7	9.20	26.5	9.20	26.5	9.20	26.5	9.20	26.5	9.20
	-14.7	-15.0	29.4	9.20	28.8	9.20	28.3	9.20	28.0	9.20	28.0	9.20	28.0	9.20	28.0	9.20
	-9.6	-10.0	31.2	9.20	30.6	9.20	29.9	9.20	29.6	9.20	29.6	9.20	29.6	9.20	29.6	9.20
	-4.4	-5.0	33.0	9.20	32.4	9.20	31.7	9.20	31.3	9.20	31.3	9.20	31.3	9.20	31.3	9.20
	-1.8	-2.5	34.1	9.20	33.4	9.20	32.7	9.20	32.3	9.20	32.3	9.20	32.3	9.20	32.3	9.20
	0.8	0.0	35.2	9.20	34.5	9.20	33.8	9.20	33.1	9.04	33.1	9.04	33.1	9.04	32.4	8.48
	2.8	2.0	36.1	9.20	35.4	9.20	34.3	9.02	33.1	8.64	33.1	8.64	33.1	8.64	32.4	8.13
	6.0	5.0	37.8	9.20	36.8	9.08	34.3	8.37	33.1	8.01	33.1	8.01	33.1	8.01	32.4	7.47
	7.0	6.0	38.5	9.20	36.8	8.80	34.3	8.08	33.1	7.73	33.1	7.73	33.1	7.73	32.4	7.20
	8.6	7.5	39.2	9.01	36.8	8.31	34.3	7.63	33.1	7.30	33.1	7.30	33.1	7.30	32.4	6.80
	11.2	10.0	39.2	8.16	36.8	7.53	34.3	6.92	33.1	6.62	33.1	6.62	33.1	6.62	32.4	6.17
	16.4	15.0	39.2	6.62	36.8	6.12	34.3	5.63	33.1	5.39	33.1	5.39	33.1	5.39	32.4	5.04

Combination(%) :Indoor/outdoor capacity ratio	Outdoor air temp.		Indoor air temp. : °CWB													
			15.0		17.0		19.0		20.0		21.0		23.0		25.0	
			TC	PI	TC	PI	TC	PI	TC	PI	TC	PI	TC	PI	TC	PI
	°CDB	°CWB	kW	kW	kW	kW	kW	kW	kW	kW	kW	kW	kW	kW	kW	kW
110%	-24.9	-25.0	26.3	9.20	25.8	9.20	25.4	9.20	25.2	9.20	25.2	9.20	25.2	9.20	25.2	9.20
	-19.8	-20.0	27.9	9.20	27.3	9.20	26.8	9.20	26.6	9.20	26.6	9.20	26.6	9.20	26.6	9.20
	-14.7	-15.0	29.5	9.20	28.9	9.20	28.4	9.20	28.1	9.20	28.1	9.20	28.1	9.20	28.1	9.20
	-9.6	-10.0	31.3	9.20	30.6	9.20	30.0	9.20	29.7	9.20	29.7	9.20	29.7	9.20	28.9	9.09
	-4.4	-5.0	33.1	9.20	32.4	9.20	31.7	9.20	31.4	9.20	31.4	9.20	31.4	9.20	28.9	8.31
	-1.8	-2.5	34.1	9.20	33.4	9.20	32.7	9.20	32.3	9.15	32.3	9.15	31.6	8.73	28.9	7.92
	0.8	0.0	35.2	9.20	34.5	9.20	33.5	9.06	32.3	8.68	32.3	8.68	31.6	8.29	28.9	7.53
	2.8	2.0	36.1	9.20	35.4	9.20	33.5	8.66	32.3	8.30	32.3	8.30	31.6	7.94	28.9	7.23
	6.0	5.0	37.8	9.20	35.9	8.71	33.5	8.01	32.3	7.67	32.3	7.67	31.6	7.31	28.9	6.61
	7.0	6.0	38.3	9.11	35.9	8.41	33.5	7.73	32.3	7.40	32.3	7.40	31.6	7.04	28.9	6.38
	8.6	7.5	38.3	8.60	35.9	7.94	33.5	7.30	32.3	6.99	32.3	6.99	31.6	6.66	28.9	6.03
	11.2	10.0	38.3	7.77	35.9	7.19	33.5	6.61	32.3	6.33	32.3	6.33	31.6	6.03	28.9	5.47
	16.4	15.0	38.3	6.29	35.9	5.82	33.5	5.37	32.3	5.15	32.3	5.15	31.6	4.91	28.9	4.47

2. Capacity Raito of Outdoor Unit (High-COP mode)

U-14ME1E81 (Heatling) **Capacity Ratio 30-130%**

TC: Total capacity (kW), PI: Power input (kW)

Combination(%) :Indoor/outdoor capacity ratio	Outdoor air temp.		Indoor air temp. :℃WB													
			15.0		17.0		19.0		20.0		21.0		23.0		25.0	
			TC	PI	TC	PI	TC	PI	TC	PI	TC	PI	TC	PI	TC	PI
	°CDB	°CWB	kW	kW	kW	kW	kW	kW	kW	kW	kW	kW	kW	kW	kW	kW
100%	-24.9	-25.0	26.4	9.20	26.0	9.20	25.5	9.20	25.4	9.20	25.2	9.20	24.8	9.20	24.3	9.10
	-19.8	-20.0	28.0	9.20	27.5	9.20	27.0	9.20	26.7	9.20	26.5	9.20	26.0	9.20	25.5	9.20
	-14.7	-15.0	29.7	9.20	29.1	9.20	28.5	9.20	28.2	9.20	27.9	9.20	27.4	9.20	25.7	8.63
	-9.6	-10.0	31.3	9.20	30.7	9.20	30.1	9.20	29.8	9.20	29.5	9.20	28.0	8.79	25.7	7.98
	-4.4	-5.0	33.1	9.20	32.4	9.20	31.8	9.20	31.4	9.20	30.3	8.81	28.0	8.04	25.7	7.31
	-1.8	-2.5	34.1	9.20	33.4	9.20	32.7	9.15	31.5	8.77	30.3	8.40	28.0	7.67	25.7	6.98
	0.8	0.0	35.2	9.20	34.5	9.20	32.7	8.69	31.5	8.33	30.3	7.97	28.0	7.30	25.7	6.65
	2.8	2.0	36.2	9.20	35.0	9.01	32.7	8.31	31.5	7.97	30.3	7.64	28.0	7.00	25.7	6.39
	6.0	5.0	37.3	9.00	35.0	8.33	32.7	7.67	31.5	7.34	30.3	7.03	28.0	6.41	25.7	5.82
	7.0	6.0	37.3	8.68	35.0	8.03	32.7	7.39	31.5	7.08	30.3	6.78	28.0	6.18	25.7	5.61
	8.6	7.5	37.3	8.18	35.0	7.57	32.7	6.97	31.5	6.68	30.3	6.40	28.0	5.84	25.7	5.30
	11.2	10.0	37.3	7.40	35.0	6.85	32.7	6.31	31.5	6.05	30.3	5.79	28.0	5.30	25.7	4.81
	16.4	15.0	37.3	5.97	35.0	5.54	32.7	5.11	31.5	4.91	30.3	4.71	28.0	4.31	25.7	3.93

Combination(%) :Indoor/outdoor capacity ratio	Outdoor air temp.		Indoor air temp. :℃WB													
			15.0		17.0		19.0		20.0		21.0		23.0		25.0	
			TC	PI	TC	PI	TC	PI	TC	PI	TC	PI	TC	PI	TC	PI
	°CDB	°CWB	kW	kW	kW	kW	kW	kW	kW	kW	kW	kW	kW	kW	kW	kW
90%	-24.9	-25.0	27.1	9.20	26.6	9.20	26.2	9.20	26.0	9.20	25.8	9.20	25.2	9.08	23.1	8.36
	-19.8	-20.0	28.7	9.20	28.2	9.20	27.7	9.20	27.4	9.20	27.2	9.20	25.2	8.52	23.1	7.84
	-14.7	-15.0	30.2	9.20	29.6	9.20	29.0	9.20	28.4	9.01	27.3	8.66	25.2	7.98	23.1	7.33
	-9.6	-10.0	31.7	9.20	31.1	9.20	29.4	8.72	28.4	8.38	27.3	8.05	25.2	7.42	23.1	6.82
	-4.4	-5.0	33.4	9.20	31.5	8.65	29.4	8.03	28.4	7.72	27.3	7.43	25.2	6.85	23.1	6.29
	-1.8	-2.5	33.6	8.89	31.5	8.27	29.4	7.68	28.4	7.39	27.3	7.11	25.2	6.55	23.1	6.02
	0.8	0.0	33.6	8.46	31.5	7.89	29.4	7.33	28.4	7.06	27.3	6.79	25.2	6.26	23.1	5.74
	2.8	2.0	33.6	8.10	31.5	7.54	29.4	7.00	28.4	6.73	27.3	6.46	25.2	5.95	23.1	5.45
	6.0	5.0	33.6	7.36	31.5	6.85	29.4	6.35	28.4	6.11	27.3	5.87	25.2	5.39	23.1	4.93
	7.0	6.0	33.6	7.09	31.5	6.60	29.4	6.12	28.4	5.88	27.3	5.65	25.2	5.19	23.1	4.74
	8.6	7.5	33.6	6.67	31.5	6.21	29.4	5.76	28.4	5.54	27.3	5.32	25.2	4.89	23.1	4.47
	11.2	10.0	33.6	5.99	31.5	5.59	29.4	5.19	28.4	4.99	27.3	4.80	25.2	4.42	23.1	4.05
	16.4	15.0	33.6	4.78	31.5	4.47	29.4	4.17	28.4	4.02	27.3	3.87	25.2	3.58	23.1	3.29

Combination(%) :Indoor/outdoor capacity ratio	Outdoor air temp.		Indoor air temp. :℃WB													
			15.0		17.0		19.0		20.0		21.0		23.0		25.0	
			TC	PI	TC	PI	TC	PI	TC	PI	TC	PI	TC	PI	TC	PI
	°CDB	°CWB	kW	kW	kW	kW	kW	kW	kW	kW	kW	kW	kW	kW	kW	kW
80%	-24.9	-25.0	28.3	9.20	27.9	9.20	26.1	8.67	25.2	8.38	24.3	8.10	22.4	7.57	20.5	7.06
	-19.8	-20.0	29.6	9.20	28.0	8.74	26.1	8.18	25.2	7.91	24.3	7.65	22.4	7.14	20.5	6.65
	-14.7	-15.0	29.9	8.77	28.0	8.23	26.1	7.70	25.2	7.45	24.3	7.19	22.4	6.70	20.5	6.24
	-9.6	-10.0	29.9	8.21	28.0	7.70	26.1	7.21	25.2	6.97	24.3	6.73	22.4	6.27	20.5	5.81
	-4.4	-5.0	29.9	7.63	28.0	7.16	26.1	6.70	25.2	6.47	24.3	6.25	22.4	5.81	20.5	5.39
	-1.8	-2.5	29.9	7.32	28.0	6.87	26.1	6.43	25.2	6.21	24.3	6.00	22.4	5.57	20.5	5.16
	0.8	0.0	29.9	6.91	28.0	6.49	26.1	6.07	25.2	5.86	24.3	5.66	22.4	5.25	20.5	4.86
	2.8	2.0	29.9	6.54	28.0	6.14	26.1	5.74	25.2	5.55	24.3	5.35	22.4	4.97	20.5	4.60
	6.0	5.0	29.9	5.91	28.0	5.55	26.1	5.18	25.2	5.01	24.3	4.82	22.4	4.47	20.5	4.11
	7.0	6.0	29.9	5.68	28.0	5.32	26.1	4.98	25.2	4.81	24.3	4.64	22.4	4.30	20.5	3.96
	8.6	7.5	29.9	5.32	28.0	4.99	26.1	4.67	25.2	4.52	24.3	4.35	22.4	4.04	20.5	3.73
	11.2	10.0	29.9	4.75	28.0	4.47	26.1	4.19	25.2	4.05	24.3	3.92	22.4	3.64	20.5	3.36
	16.4	15.0	29.9	3.75	28.0	3.54	26.1	3.33	25.2	3.24	24.3	3.13	22.4	2.92	20.5	2.73

Combination(%) :Indoor/outdoor capacity ratio	Outdoor air temp.		Indoor air temp. :℃WB													
			15.0		17.0		19.0		20.0		21.0		23.0		25.0	
			TC	PI	TC	PI	TC	PI	TC	PI	TC	PI	TC	PI	TC	PI
	°CDB	°CWB	kW	kW	kW	kW	kW	kW	kW	kW	kW	kW	kW	kW	kW	kW
70%	-24.9	-25.0	26.1	7.84	24.5	7.45	22.9	7.06	22.1	6.87	21.2	6.68	19.6	6.32	18.0	5.96
	-19.8	-20.0	26.1	7.46	24.5	7.07	22.9	6.70	22.1	6.51	21.2	6.33	19.6	5.98	18.0	5.62
	-14.7	-15.0	26.1	7.07	24.5	6.70	22.9	6.34	22.1	6.16	21.2	5.98	19.6	5.63	18.0	5.29
	-9.6	-10.0	26.1	6.68	24.5	6.32	22.9	5.97	22.1	5.79	21.2	5.62	19.6	5.28	18.0	4.94
	-4.4	-5.0	26.1	6.18	24.5	5.86	22.9	5.54	22.1	5.37	21.2	5.22	19.6	4.90	18.0	4.59
	-1.8	-2.5	26.1	5.86	24.5	5.55	22.9	5.25	22.1	5.10	21.2	4.94	19.6	4.64	18.0	4.35
	0.8	0.0	26.1	5.50	24.5	5.22	22.9	4.93	22.1	4.79	21.2	4.64	19.6	4.36	18.0	4.08
	2.8	2.0	26.1	5.19	24.5	4.92	22.9	4.65	22.1	4.51	21.2	4.38	19.6	4.09	18.0	3.79
	6.0	5.0	26.1	4.64	24.5	4.40	22.9	4.14	22.1	4.02	21.2	3.89	19.6	3.64	18.0	3.38
	7.0	6.0	26.1	4.45	24.5	4.21	22.9	3.97	22.1	3.85	21.2	3.73	19.6	3.50	18.0	3.25
	8.6	7.5	26.1	4.15	24.5	3.94	22.9	3.72	22.1	3.61	21.2	3.50	19.6	3.29	18.0	3.06
	11.2	10.0	26.1	3.69	24.5	3.50	22.9	3.32	22.1	3.23	21.2	3.14	19.6	2.95	18.0	2.75
	16.4	15.0	26.1	3.02	24.5	2.85	22.9	2.70	22.1	2.61	21.2	2.53	19.6	2.37	18.0	2.22

2. Capacity Raito of Outdoor Unit (High-COP mode)

U-14ME1E81 (Heatling) **Capacity Ratio 30-130%**

TC: Total capacity (kW), PI: Power input (kW)

Combination(%) :Indoor/outdoor capacity ratio	Outdoor air temp.		Indoor air temp. :℃WB													
			15.0		17.0		19.0		20.0		21.0		23.0		25.0	
			TC	PI	TC	PI	TC	PI	TC	PI	TC	PI	TC	PI	TC	PI
	°CDB	°CWB	kW	kW	kW	kW	kW	kW	kW	kW	kW	kW	kW	kW	kW	kW
60%	-24.9	-25.0	22.4	6.27	21.0	6.02	19.6	5.76	18.9	5.64	18.2	5.51	16.8	5.26	15.4	5.01
	-19.8	-20.0	22.4	6.00	21.0	5.73	19.6	5.49	18.9	5.36	18.2	5.23	16.8	4.98	15.4	4.73
	-14.7	-15.0	22.4	5.71	21.0	5.46	19.6	5.21	18.9	5.08	18.2	4.96	16.8	4.71	15.4	4.45
	-9.6	-10.0	22.4	5.35	21.0	5.13	19.6	4.91	18.9	4.79	18.2	4.67	16.8	4.43	15.4	4.17
	-4.4	-5.0	22.4	4.88	21.0	4.68	19.6	4.47	18.9	4.37	18.2	4.27	16.8	4.06	15.4	3.84
	-1.8	-2.5	22.4	4.60	21.0	4.42	19.6	4.22	18.9	4.13	18.2	4.03	16.8	3.82	15.4	3.62
	0.8	0.0	22.4	4.30	21.0	4.12	19.6	3.94	18.9	3.85	18.2	3.76	16.8	3.54	15.4	3.31
	2.8	2.0	22.4	4.03	21.0	3.87	19.6	3.68	18.9	3.58	18.2	3.48	16.8	3.29	15.4	3.07
	6.0	5.0	22.4	3.55	21.0	3.40	19.6	3.24	18.9	3.16	18.2	3.08	16.8	2.91	15.4	2.73
	7.0	6.0	22.4	3.39	21.0	3.25	19.6	3.10	18.9	3.02	18.2	2.95	16.8	2.79	15.4	2.63
	8.6	7.5	22.4	3.15	21.0	3.03	19.6	2.90	18.9	2.83	18.2	2.76	16.8	2.62	15.4	2.47
	11.2	10.0	22.4	2.78	21.0	2.68	19.6	2.58	18.9	2.52	18.2	2.46	16.8	2.34	15.4	2.22
	16.4	15.0	22.4	2.65	21.0	2.51	19.6	2.37	18.9	2.30	18.2	2.24	16.8	2.10	15.4	1.96

Combination(%) :Indoor/outdoor capacity ratio	Outdoor air temp.		Indoor air temp. :℃WB													
			15.0		17.0		19.0		20.0		21.0		23.0		25.0	
			TC	PI	TC	PI	TC	PI	TC	PI	TC	PI	TC	PI	TC	PI
	°CDB	°CWB	kW	kW	kW	kW	kW	kW	kW	kW	kW	kW	kW	kW	kW	kW
50%	-24.9	-25.0	18.7	5.01	17.5	4.84	16.3	4.68	15.8	4.59	15.2	4.51	14.0	4.35	12.8	4.18
	-19.8	-20.0	18.7	4.80	17.5	4.63	16.3	4.46	15.8	4.38	15.2	4.29	14.0	4.11	12.8	3.94
	-14.7	-15.0	18.7	4.53	17.5	4.40	16.3	4.24	15.8	4.16	15.2	4.07	14.0	3.89	12.8	3.71
	-9.6	-10.0	18.7	4.20	17.5	4.08	16.3	3.94	15.8	3.87	15.2	3.81	14.0	3.65	12.8	3.48
	-4.4	-5.0	18.7	3.79	17.5	3.68	16.3	3.57	15.8	3.50	15.2	3.44	14.0	3.31	12.8	3.12
	-1.8	-2.5	18.7	3.55	17.5	3.46	16.3	3.35	15.8	3.29	15.2	3.21	14.0	3.04	12.8	2.87
	0.8	0.0	18.7	3.29	17.5	3.19	16.3	3.06	15.8	2.99	15.2	2.92	14.0	2.78	12.8	2.63
	2.8	2.0	18.7	3.03	17.5	2.93	16.3	2.82	15.8	2.76	15.2	2.70	14.0	2.57	12.8	2.44
	6.0	5.0	18.7	2.63	17.5	2.56	16.3	2.47	15.8	2.43	15.2	2.38	14.0	2.27	12.8	2.17
	7.0	6.0	18.7	2.51	17.5	2.44	16.3	2.36	15.8	2.32	15.2	2.27	14.0	2.18	12.8	2.08
	8.6	7.5	18.7	2.32	17.5	2.27	16.3	2.20	15.8	2.17	15.2	2.12	14.0	2.05	12.8	1.95
	11.2	10.0	18.7	2.28	17.5	2.17	16.3	2.05	15.8	1.99	15.2	1.93	14.0	1.83	12.8	1.76
	16.4	15.0	18.7	2.28	17.5	2.17	16.3	2.05	15.8	1.99	15.2	1.93	14.0	1.82	12.8	1.71

Combination(%) :Indoor/outdoor capacity ratio	Outdoor air temp.		Indoor air temp. :℃WB													
			15.0		17.0		19.0		20.0		21.0		23.0		25.0	
			TC	PI	TC	PI	TC	PI	TC	PI	TC	PI	TC	PI	TC	PI
	°CDB	°CWB	kW	kW	kW	kW	kW	kW	kW	kW	kW	kW	kW	kW	kW	kW
40%	-24.9	-25.0	14.9	3.95	14.0	3.85	13.1	3.75	12.6	3.69	12.1	3.63	11.2	3.52	10.3	3.41
	-19.8	-20.0	14.9	3.76	14.0	3.68	13.1	3.57	12.6	3.51	12.1	3.46	11.2	3.33	10.3	3.21
	-14.7	-15.0	14.9	3.53	14.0	3.46	13.1	3.38	12.6	3.33	12.1	3.28	11.2	3.15	10.3	3.02
	-9.6	-10.0	14.9	3.24	14.0	3.19	13.1	3.12	12.6	3.08	12.1	3.04	11.2	2.94	10.3	2.82
	-4.4	-5.0	14.9	2.90	14.0	2.85	13.1	2.76	12.6	2.70	12.1	2.66	11.2	2.53	10.3	2.41
	-1.8	-2.5	14.9	2.66	14.0	2.59	13.1	2.51	12.6	2.47	12.1	2.42	11.2	2.32	10.3	2.22
	0.8	0.0	14.9	2.39	14.0	2.34	13.1	2.27	12.6	2.24	12.1	2.20	11.2	2.12	10.3	2.02
	2.8	2.0	14.9	2.19	14.0	2.14	13.1	2.09	12.6	2.06	12.1	2.03	11.2	1.96	10.3	1.88
	6.0	5.0	14.9	1.91	14.0	1.86	13.1	1.83	12.6	1.81	12.1	1.78	11.2	1.73	10.3	1.67
	7.0	6.0	14.9	1.91	14.0	1.82	13.1	1.74	12.6	1.73	12.1	1.71	11.2	1.66	10.3	1.61
	8.6	7.5	14.9	1.91	14.0	1.82	13.1	1.73	12.6	1.69	12.1	1.64	11.2	1.56	10.3	1.52
	11.2	10.0	14.9	1.91	14.0	1.82	13.1	1.73	12.6	1.69	12.1	1.64	11.2	1.54	10.3	1.45
	16.4	15.0	14.9	1.91	14.0	1.82	13.1	1.73	12.6	1.69	12.1	1.64	11.2	1.54	10.3	1.45

Combination(%) :Indoor/outdoor capacity ratio	Outdoor air temp.		Indoor air temp. :℃WB													
			15.0		17.0		19.0		20.0		21.0		23.0		25.0	
			TC	PI	TC	PI	TC	PI	TC	PI	TC	PI	TC	PI	TC	PI
	°CDB	°CWB	kW	kW	kW	kW	kW	kW	kW	kW	kW	kW	kW	kW	kW	kW
30%	-24.9	-25.0	11.2	3.03	10.5	2.96	9.8	2.90	9.5	2.86	9.1	2.82	8.4	2.75	7.7	2.68
	-19.8	-20.0	11.2	2.86	10.5	2.82	9.8	2.76	9.5	2.72	9.1	2.68	8.4	2.61	7.7	2.52
	-14.7	-15.0	11.2	2.67	10.5	2.64	9.8	2.60	9.5	2.57	9.1	2.54	8.4	2.46	7.7	2.36
	-9.6	-10.0	11.2	2.44	10.5	2.41	9.8	2.34	9.5	2.30	9.1	2.27	8.4	2.18	7.7	2.08
	-4.4	-5.0	11.2	2.05	10.5	2.01	9.8	1.97	9.5	1.95	9.1	1.92	8.4	1.85	7.7	1.79
	-1.8	-2.5	11.2	1.85	10.5	1.83	9.8	1.79	9.5	1.77	9.1	1.76	8.4	1.71	7.7	1.65
	0.8	0.0	11.2	1.66	10.5	1.64	9.8	1.62	9.5	1.61	9.1	1.59	8.4	1.56	7.7	1.51
	2.8	2.0	11.2	1.54	10.5	1.51	9.8	1.49	9.5	1.49	9.1	1.47	8.4	1.44	7.7	1.41
	6.0	5.0	11.2	1.54	10.5	1.47	9.8	1.40	9.5	1.37	9.1	1.34	8.4	1.28	7.7	1.26
	7.0	6.0	11.2	1.54	10.5	1.47	9.8	1.40	9.5	1.37	9.1	1.34	8.4	1.27	7.7	1.21
	8.6	7.5	11.2	1.54	10.5	1.47	9.8	1.40	9.5	1.37	9.1	1.34	8.4	1.27	7.7	1.20
	11.2	10.0	11.2	1.54	10.5	1.47	9.8	1.40	9.5	1.37	9.1	1.34	8.4	1.27	7.7	1.20
	16.4	15.0	11.2	1.54	10.5	1.47	9.8	1.40	9.5	1.37	9.1	1.34	8.4	1.27	7.7	1.20

2. Capacity Raito of Outdoor Unit (High-COP mode)

2-3. U-16ME1E81 (Cooling)

Capacity Ratio 30-130%

TC: Total capacity (kW), PI: Power input (kW)

Combination(%) :Indoor/outdoor capacity ratio	Outdoor air temp. °C DB	Indoor air temp. :℃WB													
		16.0		17.0		18.0		19.0		20.0		21.0		22.0	
		TC	PI	TC	PI	TC	PI	TC	PI	TC	PI	TC	PI	TC	PI
		kW	kW	kW	kW	kW	kW	kW	kW	kW	kW	kW	kW	kW	kW
130% or more	-10.0	36.0	4.16	36.0	4.16	36.0	4.16	36.0	4.16	38.4	4.44	40.8	4.72	43.2	5.00
	-5.0	36.0	4.17	36.0	4.17	36.0	4.17	36.0	4.17	38.4	4.45	40.8	4.73	43.2	5.01
	0.0	36.0	4.19	36.0	4.19	36.0	4.19	36.0	4.19	38.4	4.47	40.8	4.76	43.2	5.04
	5.0	36.0	4.22	36.0	4.22	36.0	4.22	36.0	4.22	38.4	4.51	40.8	4.80	43.2	5.09
	10.0	36.0	4.29	36.0	4.29	36.0	4.29	36.0	4.29	38.4	4.58	40.8	4.89	43.2	5.19
	15.0	36.0	4.45	36.0	4.45	36.0	4.45	36.0	4.45	38.4	4.77	40.8	5.11	43.2	5.44
	20.0	36.0	4.99	36.0	4.99	36.0	4.99	36.0	4.99	38.4	5.44	40.8	5.91	43.2	6.40
	25.0	36.0	6.23	36.0	6.23	36.0	6.23	36.0	6.23	38.4	6.78	40.8	7.36	43.2	7.96
	30.0	36.0	7.59	36.0	7.59	36.0	7.59	36.0	7.59	38.4	8.25	40.8	8.94	43.2	9.66
	35.0	36.0	9.07	36.0	9.07	36.0	9.07	36.0	9.07	38.4	9.85	40.8	10.67	41.7	10.70
	40.0	36.0	10.67	36.0	10.67	36.0	10.67	36.0	10.67	36.9	10.70	37.7	10.70	38.5	10.70
	43.0	34.3	10.70	34.3	10.70	34.3	10.70	34.3	10.70	35.1	10.70	35.9	10.70	36.7	10.70

Combination(%) :Indoor/outdoor capacity ratio	Outdoor air temp. °C DB	Indoor air temp. :℃WB													
		16.0		17.0		18.0		19.0		20.0		21.0		22.0	
		TC	PI	TC	PI	TC	PI	TC	PI	TC	PI	TC	PI	TC	PI
		kW	kW	kW	kW	kW	kW	kW	kW	kW	kW	kW	kW	kW	kW
120%	-10.0	33.8	3.89	35.2	4.07	35.2	4.07	35.2	4.07	37.5	4.34	39.9	4.61	42.2	4.88
	-5.0	33.8	3.90	35.2	4.07	35.2	4.07	35.2	4.07	37.5	4.35	39.9	4.62	42.2	4.90
	0.0	33.8	3.91	35.2	4.09	35.2	4.09	35.2	4.09	37.5	4.36	39.9	4.64	42.2	4.92
	5.0	33.8	3.93	35.2	4.12	35.2	4.12	35.2	4.12	37.5	4.40	39.9	4.68	42.2	4.97
	10.0	33.8	3.96	35.2	4.18	35.2	4.18	35.2	4.18	37.5	4.47	39.9	4.77	42.2	5.06
	15.0	33.8	4.05	35.2	4.33	35.2	4.33	35.2	4.33	37.5	4.65	39.9	4.97	42.2	5.30
	20.0	33.8	4.35	35.2	4.82	35.2	4.82	35.2	4.82	37.5	5.25	39.9	5.70	42.2	6.17
	25.0	33.8	5.34	35.2	6.03	35.2	6.03	35.2	6.03	37.5	6.56	39.9	7.11	42.2	7.69
	30.0	33.8	6.56	35.2	7.35	35.2	7.35	35.2	7.35	37.5	7.98	39.9	8.64	42.2	9.33
	35.0	33.8	7.88	35.2	8.78	35.2	8.78	35.2	8.78	37.5	9.54	39.9	10.31	41.4	10.70
	40.0	33.8	9.32	35.2	10.34	35.2	10.34	35.2	10.34	36.6	10.70	37.4	10.70	38.2	10.70
	43.0	33.8	10.24	34.1	10.70	34.1	10.70	34.1	10.70	34.9	10.70	35.6	10.70	36.4	10.70

Combination(%) :Indoor/outdoor capacity ratio	Outdoor air temp. °C DB	Indoor air temp. :℃WB													
		16.0		17.0		18.0		19.0		20.0		21.0		22.0	
		TC	PI	TC	PI	TC	PI	TC	PI	TC	PI	TC	PI	TC	PI
		kW	kW	kW	kW	kW	kW	kW	kW	kW	kW	kW	kW	kW	kW
110%	-10.0	30.2	3.48	32.7	3.78	34.3	3.97	34.3	3.97	36.6	4.23	38.9	4.49	41.2	4.77
	-5.0	30.2	3.49	32.7	3.79	34.3	3.98	34.3	3.98	36.6	4.24	38.9	4.51	41.2	4.77
	0.0	30.2	3.50	32.7	3.79	34.3	3.99	34.3	3.99	36.6	4.25	38.9	4.53	41.2	4.80
	5.0	30.2	3.51	32.7	3.81	34.3	4.02	34.3	4.02	36.6	4.29	38.9	4.57	41.2	4.85
	10.0	30.2	3.55	32.7	3.85	34.3	4.07	34.3	4.07	36.6	4.36	38.9	4.65	41.2	4.94
	15.0	30.2	3.63	32.7	3.95	34.3	4.21	34.3	4.21	36.6	4.53	38.9	4.84	41.2	5.15
	20.0	30.2	3.91	32.7	4.29	34.3	4.67	34.3	4.67	36.6	5.07	38.9	5.50	41.2	5.95
	25.0	30.2	4.81	32.7	5.30	34.3	5.84	34.3	5.84	36.6	6.34	38.9	6.86	41.2	7.42
	30.0	30.2	5.90	32.7	6.49	34.3	7.11	34.3	7.11	36.6	7.72	38.9	8.35	41.2	9.00
	35.0	30.2	7.08	32.7	7.78	34.3	8.50	34.3	8.50	36.6	9.23	38.9	9.97	41.0	10.67
	40.0	30.2	8.36	32.7	9.18	34.3	10.01	34.3	10.01	36.3	10.70	37.2	10.70	38.0	10.70
	43.0	30.2	9.18	32.7	10.07	33.9	10.70	33.9	10.70	34.6	10.70	35.4	10.70	36.2	10.70

2. Capacity Raito of Outdoor Unit (High-COP mode)

U-16ME1E81 (Cooling)

Capacity Ratio 30-130%

TC: Total capacity (kW), PI: Power input (kW)

Combination(%) :Indoor/outdoor capacity ratio	Outdoor air temp. °C DB	Indoor air temp. :°CWB													
		16.0		17.0		18.0		19.0		20.0		21.0		22.0	
		TC	PI	TC	PI	TC	PI	TC	PI	TC	PI	TC	PI	TC	PI
		kW	kW	kW	kW	kW	kW	kW	kW	kW	kW	kW	kW	kW	kW
100%	-10.0	26.8	3.09	29.0	3.35	31.3	3.60	33.5	3.87	35.7	4.12	38.0	4.39	40.2	4.65
	-5.0	26.8	3.09	29.0	3.36	31.3	3.61	33.5	3.88	35.7	4.14	38.0	4.39	40.2	4.66
	0.0	26.8	3.10	29.0	3.37	31.3	3.63	33.5	3.89	35.7	4.16	38.0	4.42	40.2	4.68
	5.0	26.8	3.12	29.0	3.38	31.3	3.65	33.5	3.92	35.7	4.18	38.0	4.45	40.2	4.72
	10.0	26.8	3.15	29.0	3.42	31.3	3.70	33.5	3.97	35.7	4.25	38.0	4.53	40.2	4.81
	15.0	26.8	3.23	29.0	3.51	31.3	3.81	33.5	4.11	35.7	4.40	38.0	4.71	40.2	5.01
	20.0	26.8	3.49	29.0	3.83	31.3	4.17	33.5	4.53	35.7	4.89	38.0	5.30	40.2	5.73
	25.0	26.8	4.32	29.0	4.74	31.3	5.18	33.5	5.64	35.7	6.12	38.0	6.63	40.2	7.14
	30.0	26.8	5.28	29.0	5.79	31.3	6.32	33.5	6.88	35.7	7.46	38.0	8.07	40.2	8.69
	35.0	26.8	6.31	29.0	6.93	31.3	7.56	33.5	8.23	35.7	8.92	38.0	9.63	40.2	10.37
	40.0	26.8	7.45	29.0	8.17	31.3	8.91	33.5	9.69	35.7	10.49	36.9	10.70	37.7	10.70
	43.0	26.8	8.16	29.0	8.95	31.3	9.77	33.5	10.62	34.4	10.70	35.1	10.70	35.9	10.70

Combination(%) :Indoor/outdoor capacity ratio	Outdoor air temp. °C DB	Indoor air temp. :°CWB													
		16.0		17.0		18.0		19.0		20.0		21.0		22.0	
		TC	PI	TC	PI	TC	PI	TC	PI	TC	PI	TC	PI	TC	PI
		kW	kW	kW	kW	kW	kW	kW	kW	kW	kW	kW	kW	kW	kW
90%	-10.0	24.1	2.78	26.1	3.01	28.1	3.24	30.2	3.48	32.2	3.71	34.2	3.94	36.2	4.18
	-5.0	24.1	2.78	26.1	3.02	28.1	3.25	30.2	3.48	32.2	3.72	34.2	3.95	36.2	4.19
	0.0	24.1	2.79	26.1	3.03	28.1	3.26	30.2	3.50	32.2	3.73	34.2	3.97	36.2	4.21
	5.0	24.1	2.80	26.1	3.04	28.1	3.28	30.2	3.51	32.2	3.75	34.2	3.99	36.2	4.23
	10.0	24.1	2.82	26.1	3.07	28.1	3.31	30.2	3.56	32.2	3.80	34.2	4.05	36.2	4.30
	15.0	24.1	2.88	26.1	3.14	28.1	3.39	30.2	3.65	32.2	3.92	34.2	4.18	36.2	4.44
	20.0	24.1	3.08	26.1	3.37	28.1	3.66	30.2	3.97	32.2	4.28	34.2	4.59	36.2	4.91
	25.0	24.1	3.81	26.1	4.16	28.1	4.53	30.2	4.91	32.2	5.30	34.2	5.71	36.2	6.14
	30.0	24.1	4.66	26.1	5.09	28.1	5.53	30.2	5.99	32.2	6.47	34.2	6.97	36.2	7.49
	35.0	24.1	5.57	26.1	6.09	28.1	6.63	30.2	7.18	32.2	7.75	34.2	8.35	36.2	8.96
	40.0	24.1	6.58	26.1	7.18	28.1	7.81	30.2	8.47	32.2	9.14	34.2	9.83	36.2	10.54
	43.0	24.1	7.21	26.1	7.88	28.1	8.57	30.2	9.28	32.2	10.02	34.0	10.70	34.8	10.70

Combination(%) :Indoor/outdoor capacity ratio	Outdoor air temp. °C DB	Indoor air temp. :°CWB													
		16.0		17.0		18.0		19.0		20.0		21.0		22.0	
		TC	PI	TC	PI	TC	PI	TC	PI	TC	PI	TC	PI	TC	PI
		kW	kW	kW	kW	kW	kW	kW	kW	kW	kW	kW	kW	kW	kW
80%	-10.0	21.4	2.47	23.2	2.67	25.0	2.88	26.8	3.09	28.6	3.30	30.4	3.51	32.2	3.71
	-5.0	21.4	2.48	23.2	2.68	25.0	2.89	26.8	3.09	28.6	3.30	30.4	3.51	32.2	3.72
	0.0	21.4	2.48	23.2	2.68	25.0	2.90	26.8	3.10	28.6	3.31	30.4	3.52	32.2	3.73
	5.0	21.4	2.49	23.2	2.70	25.0	2.91	26.8	3.12	28.6	3.32	30.4	3.54	32.2	3.75
	10.0	21.4	2.50	23.2	2.72	25.0	2.93	26.8	3.14	28.6	3.36	30.4	3.58	32.2	3.79
	15.0	21.4	2.54	23.2	2.77	25.0	2.99	26.8	3.22	28.6	3.44	30.4	3.67	32.2	3.90
	20.0	21.4	2.68	23.2	2.93	25.0	3.19	26.8	3.44	28.6	3.70	30.4	3.97	32.2	4.24
	25.0	21.4	3.34	23.2	3.63	25.0	3.93	26.8	4.23	28.6	4.55	30.4	4.88	32.2	5.23
	30.0	21.4	4.07	23.2	4.43	25.0	4.80	26.8	5.18	28.6	5.56	30.4	5.97	32.2	6.39
	35.0	21.4	4.87	23.2	5.30	25.0	5.74	26.8	6.20	28.6	6.67	30.4	7.15	32.2	7.65
	40.0	21.4	5.74	23.2	6.25	25.0	6.78	26.8	7.32	28.6	7.88	30.4	8.44	32.2	9.03
	43.0	21.4	6.30	23.2	6.86	25.0	7.43	26.8	8.02	28.6	8.63	30.4	9.26	32.2	9.90

Combination(%) :Indoor/outdoor capacity ratio	Outdoor air temp. °C DB	Indoor air temp. :°CWB													
		16.0		17.0		18.0		19.0		20.0		21.0		22.0	
		TC	PI	TC	PI	TC	PI	TC	PI	TC	PI	TC	PI	TC	PI
		kW	kW	kW	kW	kW	kW	kW	kW	kW	kW	kW	kW	kW	kW
70%	-10.0	18.8	2.16	20.3	2.35	21.9	2.53	23.5	2.71	25.0	2.88	26.6	3.06	28.1	3.24
	-5.0	18.8	2.16	20.3	2.35	21.9	2.53	23.5	2.71	25.0	2.89	26.6	3.07	28.1	3.25
	0.0	18.8	2.16	20.3	2.35	21.9	2.53	23.5	2.72	25.0	2.90	26.6	3.08	28.1	3.26
	5.0	18.8	2.17	20.3	2.35	21.9	2.53	23.5	2.72	25.0	2.91	26.6	3.09	28.1	3.28
	10.0	18.8	2.18	20.3	2.37	21.9	2.55	23.5	2.74	25.0	2.93	26.6	3.12	28.1	3.30
	15.0	18.8	2.21	20.3	2.40	21.9	2.59	23.5	2.79	25.0	2.99	26.6	3.19	28.1	3.37
	20.0	18.8	2.30	20.3	2.52	21.9	2.73	23.5	2.95	25.0	3.16	26.6	3.38	28.1	3.60
	25.0	18.8	2.84	20.3	3.14	21.9	3.37	23.5	3.61	25.0	3.87	26.6	4.13	28.1	4.39
	30.0	18.8	3.54	20.3	3.83	21.9	4.12	23.5	4.42	25.0	4.73	26.6	5.05	28.1	5.38
	35.0	18.8	4.22	20.3	4.57	21.9	4.93	23.5	5.29	25.0	5.67	26.6	6.07	28.1	6.46
	40.0	18.8	4.97	20.3	5.38	21.9	5.81	23.5	6.25	25.0	6.70	26.6	7.16	28.1	7.63
	43.0	18.8	5.45	20.3	5.90	21.9	6.38	23.5	6.86	25.0	7.35	26.6	7.85	28.1	8.37

2. Capacity Raito of Outdoor Unit (High-COP mode)

U-16ME1E81 (Cooling)

Capacity Ratio 30-130%

TC: Total capacity (kW), PI: Power input (kW)

Combination(%) :Indoor/outdoor capacity ratio	Outdoor air temp. °C DB	Indoor air temp. :°CWB													
		16.0		17.0		18.0		19.0		20.0		21.0		22.0	
		TC	PI	TC	PI	TC	PI	TC	PI	TC	PI	TC	PI	TC	PI
		kW	kW	kW	kW	kW	kW	kW	kW	kW	kW	kW	kW	kW	kW
60%	-10.0	16.1	1.85	17.4	2.01	18.8	2.16	20.1	2.32	21.4	2.47	22.8	2.63	24.1	2.78
	-5.0	16.1	1.85	17.4	2.01	18.8	2.16	20.1	2.32	21.4	2.48	22.8	2.63	24.1	2.78
	0.0	16.1	1.86	17.4	2.01	18.8	2.16	20.1	2.32	21.4	2.48	22.8	2.63	24.1	2.79
	5.0	16.1	1.86	17.4	2.02	18.8	2.17	20.1	2.33	21.4	2.49	22.8	2.64	24.1	2.80
	10.0	16.1	1.87	17.4	2.02	18.8	2.18	20.1	2.35	21.4	2.50	22.8	2.66	24.1	2.82
	15.0	16.1	1.88	17.4	2.05	18.8	2.21	20.1	2.37	21.4	2.53	22.8	2.70	24.1	2.86
	20.0	16.1	1.95	17.4	2.12	18.8	2.30	20.1	2.48	21.4	2.65	22.8	2.83	24.1	3.01
	25.0	16.1	2.29	17.4	2.52	18.8	2.76	20.1	3.00	21.4	3.23	22.8	3.45	24.1	3.65
	30.0	16.1	3.04	17.4	3.26	18.8	3.49	20.1	3.73	21.4	3.98	22.8	4.22	24.1	4.48
	35.0	16.1	3.61	17.4	3.89	18.8	4.17	20.1	4.46	21.4	4.76	22.8	5.06	24.1	5.37
	40.0	16.1	4.24	17.4	4.57	18.8	4.91	20.1	5.26	21.4	5.61	22.8	5.97	24.1	6.35
	43.0	16.1	4.64	17.4	5.01	18.8	5.38	20.1	5.77	21.4	6.16	22.8	6.56	24.1	6.96

Combination(%) :Indoor/outdoor capacity ratio	Outdoor air temp. °C DB	Indoor air temp. :°CWB													
		16.0		17.0		18.0		19.0		20.0		21.0		22.0	
		TC	PI	TC	PI	TC	PI	TC	PI	TC	PI	TC	PI	TC	PI
		kW	kW	kW	kW	kW	kW	kW	kW	kW	kW	kW	kW	kW	kW
50%	-10.0	13.4	1.55	14.5	1.67	15.6	1.80	16.8	1.93	17.9	2.06	19.0	2.19	20.1	2.31
	-5.0	13.4	1.55	14.5	1.67	15.6	1.80	16.8	1.93	17.9	2.06	19.0	2.19	20.1	2.32
	0.0	13.4	1.55	14.5	1.68	15.6	1.80	16.8	1.93	17.9	2.07	19.0	2.19	20.1	2.32
	5.0	13.4	1.55	14.5	1.68	15.6	1.81	16.8	1.93	17.9	2.07	19.0	2.20	20.1	2.33
	10.0	13.4	1.56	14.5	1.69	15.6	1.82	16.8	1.94	17.9	2.07	19.0	2.21	20.1	2.34
	15.0	13.4	1.56	14.5	1.70	15.6	1.83	16.8	1.97	17.9	2.10	19.0	2.23	20.1	2.37
	20.0	13.4	1.60	14.5	1.74	15.6	1.88	16.8	2.02	17.9	2.16	19.0	2.31	20.1	2.45
	25.0	13.4	1.81	14.5	1.98	15.6	2.16	16.8	2.34	17.9	2.52	19.0	2.70	20.1	2.88
	30.0	13.4	2.58	14.5	2.75	15.6	2.92	16.8	3.10	17.9	3.28	19.0	3.47	20.1	3.66
	35.0	13.4	3.05	14.5	3.26	15.6	3.47	16.8	3.70	17.9	3.92	19.0	4.15	20.1	4.38
	40.0	13.4	3.56	14.5	3.81	15.6	4.07	16.8	4.35	17.9	4.61	19.0	4.89	20.1	5.17
	43.0	13.4	3.88	14.5	4.17	15.6	4.46	16.8	4.76	17.9	5.05	19.0	5.36	20.1	5.67

Combination(%) :Indoor/outdoor capacity ratio	Outdoor air temp. °C DB	Indoor air temp. :°CWB													
		16.0		17.0		18.0		19.0		20.0		21.0		22.0	
		TC	PI	TC	PI	TC	PI	TC	PI	TC	PI	TC	PI	TC	PI
		kW	kW	kW	kW	kW	kW	kW	kW	kW	kW	kW	kW	kW	kW
40%	-10.0	10.7	1.23	11.6	1.34	12.5	1.44	13.4	1.55	14.3	1.65	15.2	1.75	16.1	1.85
	-5.0	10.7	1.23	11.6	1.34	12.5	1.44	13.4	1.55	14.3	1.65	15.2	1.75	16.1	1.85
	0.0	10.7	1.23	11.6	1.34	12.5	1.44	13.4	1.55	14.3	1.65	15.2	1.75	16.1	1.86
	5.0	10.7	1.23	11.6	1.34	12.5	1.45	13.4	1.55	14.3	1.65	15.2	1.75	16.1	1.86
	10.0	10.7	1.24	11.6	1.34	12.5	1.45	13.4	1.56	14.3	1.65	15.2	1.76	16.1	1.87
	15.0	10.7	1.25	11.6	1.35	12.5	1.46	13.4	1.56	14.3	1.67	15.2	1.78	16.1	1.88
	20.0	10.7	1.27	11.6	1.37	12.5	1.48	13.4	1.60	14.3	1.70	15.2	1.82	16.1	1.93
	25.0	10.7	1.37	11.6	1.51	12.5	1.63	13.4	1.76	14.3	1.89	15.2	2.02	16.1	2.16
	30.0	10.7	2.16	11.6	2.28	12.5	2.40	13.4	2.53	14.3	2.66	15.2	2.79	16.1	2.93
	35.0	10.7	2.52	11.6	2.67	12.5	2.83	13.4	3.00	14.3	3.16	15.2	3.32	16.1	3.49
	40.0	10.7	2.92	11.6	3.11	12.5	3.30	13.4	3.50	14.3	3.70	15.2	3.89	16.1	4.10
	43.0	10.7	3.18	11.6	3.39	12.5	3.60	13.4	3.82	14.3	4.04	15.2	4.26	16.1	4.49

Combination(%) :Indoor/outdoor capacity ratio	Outdoor air temp. °C DB	Indoor air temp. :°CWB													
		16.0		17.0		18.0		19.0		20.0		21.0		22.0	
		TC	PI	TC	PI	TC	PI	TC	PI	TC	PI	TC	PI	TC	PI
		kW	kW	kW	kW	kW	kW	kW	kW	kW	kW	kW	kW	kW	kW
30%	-10.0	8.0	0.93	8.7	1.00	9.4	1.08	10.1	1.16	10.7	1.23	11.4	1.31	12.1	1.39
	-5.0	8.0	0.93	8.7	1.00	9.4	1.08	10.1	1.16	10.7	1.23	11.4	1.32	12.1	1.39
	0.0	8.0	0.93	8.7	1.00	9.4	1.08	10.1	1.16	10.7	1.23	11.4	1.32	12.1	1.39
	5.0	8.0	0.93	8.7	1.00	9.4	1.09	10.1	1.16	10.7	1.23	11.4	1.32	12.1	1.39
	10.0	8.0	0.93	8.7	1.00	9.4	1.09	10.1	1.16	10.7	1.24	11.4	1.32	12.1	1.40
	15.0	8.0	0.93	8.7	1.01	9.4	1.09	10.1	1.17	10.7	1.24	11.4	1.33	12.1	1.41
	20.0	8.0	0.95	8.7	1.02	9.4	1.10	10.1	1.19	10.7	1.26	11.4	1.34	12.1	1.42
	25.0	8.0	0.99	8.7	1.08	9.4	1.17	10.1	1.26	10.7	1.34	11.4	1.43	12.1	1.52
	30.0	8.0	1.77	8.7	1.85	9.4	1.93	10.1	2.02	10.7	2.11	11.4	2.19	12.1	2.28
	35.0	8.0	2.03	8.7	2.14	9.4	2.25	10.1	2.36	10.7	2.47	11.4	2.58	12.1	2.69
	40.0	8.0	2.33	8.7	2.46	9.4	2.59	10.1	2.72	10.7	2.86	11.4	3.00	12.1	3.13
	43.0	8.0	2.52	8.7	2.67	9.4	2.81	10.1	2.96	10.7	3.11	11.4	3.27	12.1	3.42

2. Capacity Raito of Outdoor Unit (High-COP mode)

2-4. U-16ME1E81 (Heatling)

Capacity Ratio 30-130%

TC: Total capacity (kW), PI: Power input (kW)

Combination(%) :Indoor/outdoor capacity ratio	Outdoor air temp.		Indoor air temp. : °CWB													
			15.0		17.0		19.0		20.0		21.0		23.0		25.0	
			TC	PI	TC	PI	TC	PI	TC	PI	TC	PI	TC	PI	TC	PI
	°CDB	°CWB	kW	kW	kW	kW	kW	kW	kW	kW	kW	kW	kW	kW	kW	kW
130% or more	-24.9	-25.0	31.0	10.96	30.6	10.96	30.4	10.96	29.7	10.69	29.7	10.69	29.7	10.69	29.7	10.69
	-19.8	-20.0	32.6	10.96	32.1	10.96	31.7	10.96	31.3	10.89	31.3	10.89	31.3	10.89	31.3	10.89
	-14.7	-15.0	34.3	10.96	33.7	10.96	33.2	10.96	32.9	10.96	32.9	10.96	32.9	10.96	32.9	10.96
	-9.6	-10.0	36.3	10.96	35.7	10.96	35.0	10.96	34.7	10.96	34.7	10.96	34.7	10.96	34.7	10.96
	-4.4	-5.0	38.8	10.96	38.1	10.96	37.4	10.96	37.0	10.96	37.0	10.96	37.0	10.96	37.0	10.96
	-1.8	-2.5	40.2	10.96	39.5	10.96	38.7	10.96	38.3	10.96	38.3	10.96	38.3	10.96	38.3	10.96
	0.8	0.0	41.6	10.96	40.8	10.96	40.0	10.96	39.6	10.96	39.6	10.96	39.6	10.96	39.6	10.96
	2.8	2.0	42.8	10.96	42.0	10.96	41.1	10.96	40.3	10.77	40.3	10.77	40.3	10.77	40.3	10.77
	6.0	5.0	44.9	10.96	44.0	10.96	41.8	10.41	40.3	9.96	40.3	9.96	40.3	9.96	40.3	9.96
	7.0	6.0	45.8	10.96	44.8	10.95	41.8	10.05	40.3	9.61	40.3	9.61	40.3	9.61	40.3	9.61
	8.6	7.5	47.3	10.96	44.8	10.32	41.8	9.47	40.3	9.06	40.3	9.06	40.3	9.06	40.3	9.06
	11.2	10.0	47.8	10.09	44.8	9.31	41.8	8.56	40.3	8.19	40.3	8.19	40.3	8.19	40.3	8.19
	16.4	15.0	47.8	8.09	44.8	7.48	41.8	6.90	40.3	6.61	40.3	6.61	40.3	6.61	40.3	6.61

Combination(%) :Indoor/outdoor capacity ratio	Outdoor air temp.		Indoor air temp. : °CWB													
			15.0		17.0		19.0		20.0		21.0		23.0		25.0	
			TC	PI	TC	PI	TC	PI	TC	PI	TC	PI	TC	PI	TC	PI
	°CDB	°CWB	kW	kW	kW	kW	kW	kW	kW	kW	kW	kW	kW	kW	kW	kW
120%	-24.9	-25.0	31.3	10.96	30.9	10.96	30.6	10.96	29.7	10.60	29.7	10.60	29.7	10.60	29.7	10.60
	-19.8	-20.0	32.8	10.96	32.3	10.96	31.9	10.96	31.4	10.81	31.4	10.81	31.4	10.81	31.4	10.81
	-14.7	-15.0	34.5	10.96	33.9	10.96	33.3	10.96	33.1	10.96	33.1	10.96	33.1	10.96	33.1	10.96
	-9.6	-10.0	36.5	10.96	35.9	10.96	35.2	10.96	34.9	10.96	34.9	10.96	34.9	10.96	34.9	10.96
	-4.4	-5.0	39.0	10.96	38.3	10.96	37.5	10.96	37.2	10.96	37.2	10.96	37.2	10.96	37.2	10.96
	-1.8	-2.5	40.4	10.96	39.5	10.96	38.7	10.96	38.3	10.96	38.3	10.96	38.3	10.96	38.3	10.96
	0.8	0.0	41.6	10.96	40.8	10.96	40.0	10.96	39.4	10.84	39.4	10.84	39.4	10.84	38.5	10.17
	2.8	2.0	42.8	10.96	42.0	10.96	40.8	10.81	39.4	10.35	39.4	10.35	39.4	10.35	38.5	9.76
	6.0	5.0	44.9	10.96	43.8	10.86	40.8	9.98	39.4	9.56	39.4	9.56	39.4	9.56	38.5	8.93
	7.0	6.0	45.9	10.96	43.8	10.47	40.8	9.62	39.4	9.21	39.4	9.21	39.4	9.21	38.5	8.61
	8.6	7.5	46.7	10.68	43.8	9.85	40.8	9.06	39.4	8.68	39.4	8.68	39.4	8.68	38.5	8.12
	11.2	10.0	46.7	9.62	43.8	8.89	40.8	8.18	39.4	7.84	39.4	7.84	39.4	7.84	38.5	7.33
	16.4	15.0	46.7	7.70	43.8	7.12	40.8	6.58	39.4	6.31	39.4	6.31	39.4	6.31	38.5	5.94

Combination(%) :Indoor/outdoor capacity ratio	Outdoor air temp.		Indoor air temp. : °CWB													
			15.0		17.0		19.0		20.0		21.0		23.0		25.0	
			TC	PI	TC	PI	TC	PI	TC	PI	TC	PI	TC	PI	TC	PI
	°CDB	°CWB	kW	kW	kW	kW	kW	kW	kW	kW	kW	kW	kW	kW	kW	kW
110%	-24.9	-25.0	31.5	10.96	31.2	10.96	30.7	10.90	29.8	10.52	29.8	10.52	29.5	10.30	27.3	9.52
	-19.8	-20.0	33.0	10.96	32.6	10.96	32.1	10.96	31.4	10.73	31.4	10.73	31.2	10.50	28.9	9.70
	-14.7	-15.0	34.8	10.96	34.1	10.96	33.6	10.96	33.3	10.96	33.3	10.96	33.2	10.77	30.8	9.95
	-9.6	-10.0	36.7	10.96	36.0	10.96	35.4	10.96	35.0	10.96	35.0	10.96	35.0	10.96	33.2	10.27
	-4.4	-5.0	39.2	10.96	38.4	10.96	37.6	10.96	37.2	10.96	37.2	10.96	37.2	10.96	34.5	9.94
	-1.8	-2.5	40.4	10.96	39.6	10.96	38.8	10.96	38.4	10.96	38.4	10.96	37.6	10.46	34.5	9.49
	0.8	0.0	41.7	10.96	40.9	10.96	39.9	10.87	38.4	10.40	38.4	10.40	37.6	9.95	34.5	9.05
	2.8	2.0	42.8	10.96	42.0	10.96	39.9	10.38	38.4	9.96	38.4	9.96	37.6	9.54	34.5	8.67
	6.0	5.0	45.0	10.96	42.7	10.38	39.9	9.55	38.4	9.15	38.4	9.15	37.6	8.73	34.5	7.92
	7.0	6.0	45.6	10.82	42.7	10.00	39.9	9.21	38.4	8.82	38.4	8.82	37.6	8.41	34.5	7.63
	8.6	7.5	45.6	10.18	42.7	9.41	39.9	8.67	38.4	8.31	38.4	8.31	37.6	7.93	34.5	7.20
	11.2	10.0	45.6	9.15	42.7	8.47	39.9	7.81	38.4	7.49	38.4	7.49	37.6	7.16	34.5	6.51
	16.4	15.0	45.6	7.31	42.7	6.79	39.9	6.27	38.4	6.03	38.4	6.03	37.6	5.77	34.5	5.27

2. Capacity Raito of Outdoor Unit (High-COP mode)

U-16ME1E81 (Heatling) **Capacity Ratio 30-130%**

TC: Total capacity (kW), PI: Power input (kW)

Combination(%) :Indoor/outdoor capacity ratio	Outdoor air temp.		Indoor air temp. :℃WB													
			15.0		17.0		19.0		20.0		21.0		23.0		25.0	
			TC	PI	TC	PI	TC	PI	TC	PI	TC	PI	TC	PI	TC	PI
	°CDB	°CWB	kW	kW	kW	kW	kW	kW	kW	kW	kW	kW	kW	kW	kW	kW
100%	-24.9	-25.0	31.8	10.96	31.4	10.96	30.8	10.82	29.8	10.44	28.8	10.08	26.9	9.37	24.8	8.67
	-19.8	-20.0	33.3	10.96	32.8	10.96	32.3	10.96	31.5	10.66	30.5	10.28	28.4	9.55	26.3	8.84
	-14.7	-15.0	35.0	10.96	34.4	10.96	33.8	10.96	33.5	10.95	32.4	10.56	30.2	9.80	28.0	9.06
	-9.6	-10.0	36.9	10.96	36.2	10.96	35.6	10.96	35.2	10.96	34.8	10.93	32.6	10.12	30.2	9.35
	-4.4	-5.0	39.3	10.96	38.5	10.96	37.7	10.96	37.3	10.96	36.1	10.55	33.3	9.63	30.6	8.75
	-1.8	-2.5	40.4	10.96	39.6	10.96	38.8	10.96	37.5	10.51	36.1	10.07	33.3	9.20	30.6	8.37
	0.8	0.0	41.7	10.96	40.9	10.96	38.9	10.41	37.5	9.99	36.1	9.57	33.3	8.76	30.6	7.98
	2.8	2.0	42.9	10.96	41.7	10.79	38.9	9.97	37.5	9.57	36.1	9.18	33.3	8.40	30.6	7.65
	6.0	5.0	44.4	10.71	41.7	9.91	38.9	9.14	37.5	8.76	36.1	8.39	33.3	7.66	30.6	6.97
	7.0	6.0	44.4	10.31	41.7	9.54	38.9	8.80	37.5	8.43	36.1	8.08	33.3	7.38	30.6	6.72
	8.6	7.5	44.4	9.69	41.7	8.98	38.9	8.29	37.5	7.95	36.1	7.61	33.3	6.96	30.6	6.34
	11.2	10.0	44.4	8.71	41.7	8.08	38.9	7.46	37.5	7.16	36.1	6.86	33.3	6.29	30.6	5.73
	16.4	15.0	44.4	6.94	41.7	6.45	38.9	5.98	37.5	5.75	36.1	5.52	33.3	5.07	30.6	4.64

Combination(%) :Indoor/outdoor capacity ratio	Outdoor air temp.		Indoor air temp. :℃WB													
			15.0		17.0		19.0		20.0		21.0		23.0		25.0	
			TC	PI	TC	PI	TC	PI	TC	PI	TC	PI	TC	PI	TC	PI
	°CDB	°CWB	kW	kW	kW	kW	kW	kW	kW	kW	kW	kW	kW	kW	kW	kW
90%	-24.9	-25.0	32.8	10.96	32.4	10.96	31.1	10.57	30.1	10.23	29.1	9.90	27.1	9.25	25.0	8.62
	-19.8	-20.0	34.2	10.96	33.6	10.96	32.8	10.81	31.8	10.46	30.8	10.12	28.6	9.43	26.5	8.78
	-14.7	-15.0	35.8	10.96	35.2	10.96	34.5	10.96	33.8	10.73	32.5	10.30	30.0	9.48	27.5	8.69
	-9.6	-10.0	37.6	10.96	36.9	10.96	35.0	10.41	33.8	10.01	32.5	9.61	30.0	8.84	27.5	8.12
	-4.4	-5.0	39.5	10.96	37.5	10.37	35.0	9.62	33.8	9.26	32.5	8.89	30.0	8.19	27.5	7.52
	-1.8	-2.5	40.0	10.66	37.5	9.92	35.0	9.21	33.8	8.87	32.5	8.52	30.0	7.87	27.5	7.22
	0.8	0.0	40.0	10.16	37.5	9.47	35.0	8.79	33.8	8.46	32.5	8.13	30.0	7.49	27.5	6.87
	2.8	2.0	40.0	9.67	37.5	9.00	35.0	8.35	33.8	8.03	32.5	7.72	30.0	7.11	27.5	6.52
	6.0	5.0	40.0	8.76	37.5	8.16	35.0	7.58	33.8	7.29	32.5	7.01	30.0	6.46	27.5	5.92
	7.0	6.0	40.0	8.41	37.5	7.85	35.0	7.29	33.8	7.01	32.5	6.74	30.0	6.21	27.5	5.69
	8.6	7.5	40.0	7.89	37.5	7.36	35.0	6.85	33.8	6.59	32.5	6.34	30.0	5.84	27.5	5.36
	11.2	10.0	40.0	7.05	37.5	6.59	35.0	6.14	33.8	5.92	32.5	5.69	30.0	5.26	27.5	4.83
	16.4	15.0	40.0	5.56	37.5	5.22	35.0	4.88	33.8	4.71	32.5	4.55	30.0	4.22	27.5	3.90

Combination(%) :Indoor/outdoor capacity ratio	Outdoor air temp.		Indoor air temp. :℃WB													
			15.0		17.0		19.0		20.0		21.0		23.0		25.0	
			TC	PI	TC	PI	TC	PI	TC	PI	TC	PI	TC	PI	TC	PI
	°CDB	°CWB	kW	kW	kW	kW	kW	kW	kW	kW	kW	kW	kW	kW	kW	kW
80%	-24.9	-25.0	33.7	10.96	33.3	10.96	31.1	10.25	30.0	9.91	28.9	9.57	26.7	8.90	24.5	8.28
	-19.8	-20.0	35.2	10.96	33.3	10.39	31.1	9.71	30.0	9.38	28.9	9.05	26.7	8.43	24.5	7.83
	-14.7	-15.0	35.6	10.47	33.3	9.80	31.1	9.17	30.0	8.86	28.9	8.56	26.7	7.96	24.5	7.38
	-9.6	-10.0	35.6	9.82	33.3	9.21	31.1	8.62	30.0	8.32	28.9	8.03	26.7	7.47	24.5	6.92
	-4.4	-5.0	35.6	9.15	33.3	8.59	31.1	8.03	30.0	7.76	28.9	7.49	26.7	6.96	24.5	6.45
	-1.8	-2.5	35.6	8.75	33.3	8.21	31.1	7.68	30.0	7.42	28.9	7.16	26.7	6.65	24.5	6.16
	0.8	0.0	35.6	8.24	33.3	7.74	31.1	7.24	30.0	7.00	28.9	6.75	26.7	6.28	24.5	5.81
	2.8	2.0	35.6	7.80	33.3	7.32	31.1	6.85	30.0	6.63	28.9	6.40	26.7	5.94	24.5	5.50
	6.0	5.0	35.6	7.03	33.3	6.61	31.1	6.19	30.0	5.98	28.9	5.77	26.7	5.36	24.5	4.95
	7.0	6.0	35.6	6.74	33.3	6.34	31.1	5.93	30.0	5.74	28.9	5.54	26.7	5.15	24.5	4.75
	8.6	7.5	35.6	6.30	33.3	5.93	31.1	5.56	30.0	5.38	28.9	5.20	26.7	4.84	24.5	4.48
	11.2	10.0	35.6	5.60	33.3	5.29	31.1	4.97	30.0	4.81	28.9	4.65	26.7	4.34	24.5	4.03
	16.4	15.0	35.6	4.36	33.3	4.14	31.1	3.91	30.0	3.80	28.9	3.69	26.7	3.46	24.5	3.24

Combination(%) :Indoor/outdoor capacity ratio	Outdoor air temp.		Indoor air temp. :℃WB													
			15.0		17.0		19.0		20.0		21.0		23.0		25.0	
			TC	PI	TC	PI	TC	PI	TC	PI	TC	PI	TC	PI	TC	PI
	°CDB	°CWB	kW	kW	kW	kW	kW	kW	kW	kW	kW	kW	kW	kW	kW	kW
70%	-24.9	-25.0	31.1	9.31	29.2	8.82	27.2	8.34	26.3	8.10	25.3	7.87	23.3	7.42	21.4	6.98
	-19.8	-20.0	31.1	8.88	29.2	8.40	27.2	7.94	26.3	7.71	25.3	7.49	23.3	7.05	21.4	6.62
	-14.7	-15.0	31.1	8.44	29.2	7.99	27.2	7.54	26.3	7.33	25.3	7.11	23.3	6.68	21.4	6.26
	-9.6	-10.0	31.1	7.99	29.2	7.56	27.2	7.13	26.3	6.92	25.3	6.71	23.3	6.30	21.4	5.89
	-4.4	-5.0	31.1	7.36	29.2	6.97	27.2	6.58	26.3	6.40	25.3	6.20	23.3	5.83	21.4	5.46
	-1.8	-2.5	31.1	6.98	29.2	6.61	27.2	6.25	26.3	6.07	25.3	5.89	23.3	5.53	21.4	5.18
	0.8	0.0	31.1	6.55	29.2	6.21	27.2	5.88	26.3	5.71	25.3	5.54	23.3	5.20	21.4	4.87
	2.8	2.0	31.1	6.18	29.2	5.86	27.2	5.54	26.3	5.39	25.3	5.23	23.3	4.91	21.4	4.59
	6.0	5.0	31.1	5.53	29.2	5.24	27.2	4.97	26.3	4.81	25.3	4.67	23.3	4.38	21.4	4.08
	7.0	6.0	31.1	5.29	29.2	5.02	27.2	4.75	26.3	4.61	25.3	4.48	23.3	4.20	21.4	3.92
	8.6	7.5	31.1	4.92	29.2	4.69	27.2	4.44	26.3	4.32	25.3	4.19	23.3	3.95	21.4	3.68
	11.2	10.0	31.1	4.35	29.2	4.16	27.2	3.95	26.3	3.84	25.3	3.74	23.3	3.53	21.4	3.31
	16.4	15.0	31.1	3.72	29.2	3.52	27.2	3.32	26.3	3.23	25.3	3.13	23.3	2.93	21.4	2.74

2. Capacity Raito of Outdoor Unit (High-COP mode)

U-16ME1E81 (Heatling) **Capacity Ratio 30-130%**

TC: Total capacity (kW), PI: Power input (kW)

Combination(%) :Indoor/outdoor capacity ratio	Outdoor air temp.		Indoor air temp. :℃WB													
			15.0		17.0		19.0		20.0		21.0		23.0		25.0	
			TC	PI	TC	PI	TC	PI	TC	PI	TC	PI	TC	PI	TC	PI
	°CDB	°CWB	kW	kW	kW	kW	kW	kW	kW	kW	kW	kW	kW	kW	kW	kW
60%	-24.9	-25.0	26.7	7.44	25.0	7.11	23.3	6.79	22.5	6.64	21.7	6.48	20.0	6.18	18.3	5.88
	-19.8	-20.0	26.7	7.12	25.0	6.81	23.3	6.50	22.5	6.34	21.7	6.19	20.0	5.88	18.3	5.58
	-14.7	-15.0	26.7	6.80	25.0	6.51	23.3	6.20	22.5	6.04	21.7	5.89	20.0	5.59	18.3	5.28
	-9.6	-10.0	26.7	6.35	25.0	6.08	23.3	5.82	22.5	5.68	21.7	5.55	20.0	5.27	18.3	4.97
	-4.4	-5.0	26.7	5.79	25.0	5.56	23.3	5.31	22.5	5.19	21.7	5.07	20.0	4.81	18.3	4.56
	-1.8	-2.5	26.7	5.47	25.0	5.24	23.3	5.02	22.5	4.91	21.7	4.79	20.0	4.55	18.3	4.31
	0.8	0.0	26.7	5.11	25.0	4.91	23.3	4.70	22.5	4.59	21.7	4.48	20.0	4.26	18.3	4.02
	2.8	2.0	26.7	4.80	25.0	4.60	23.3	4.41	22.5	4.31	21.7	4.21	20.0	3.97	18.3	3.73
	6.0	5.0	26.7	4.24	25.0	4.07	23.3	3.89	22.5	3.80	21.7	3.71	20.0	3.52	18.3	3.31
	7.0	6.0	26.7	4.05	25.0	3.89	23.3	3.73	22.5	3.64	21.7	3.55	20.0	3.37	18.3	3.19
	8.6	7.5	26.7	3.76	25.0	3.62	23.3	3.47	22.5	3.40	21.7	3.32	20.0	3.16	18.3	2.99
	11.2	10.0	26.7	3.30	25.0	3.19	23.3	3.08	22.5	3.02	21.7	2.95	20.0	2.82	18.3	2.68
	16.4	15.0	26.7	3.27	25.0	3.10	23.3	2.93	22.5	2.85	21.7	2.77	20.0	2.60	18.3	2.43

Combination(%) :Indoor/outdoor capacity ratio	Outdoor air temp.		Indoor air temp. :℃WB													
			15.0		17.0		19.0		20.0		21.0		23.0		25.0	
			TC	PI	TC	PI	TC	PI	TC	PI	TC	PI	TC	PI	TC	PI
	°CDB	°CWB	kW	kW	kW	kW	kW	kW	kW	kW	kW	kW	kW	kW	kW	kW
50%	-24.9	-25.0	22.2	5.93	20.9	5.73	19.5	5.52	18.8	5.42	18.0	5.32	16.7	5.11	15.3	4.91
	-19.8	-20.0	22.2	5.67	20.9	5.50	19.5	5.29	18.8	5.18	18.0	5.08	16.7	4.87	15.3	4.65
	-14.7	-15.0	22.2	5.34	20.9	5.18	19.5	5.02	18.8	4.93	18.0	4.84	16.7	4.63	15.3	4.41
	-9.6	-10.0	22.2	4.96	20.9	4.81	19.5	4.66	18.8	4.59	18.0	4.50	16.7	4.33	15.3	4.15
	-4.4	-5.0	22.2	4.48	20.9	4.36	19.5	4.23	18.8	4.16	18.0	4.09	16.7	3.93	15.3	3.77
	-1.8	-2.5	22.2	4.21	20.9	4.10	19.5	3.97	18.8	3.91	18.0	3.84	16.7	3.70	15.3	3.51
	0.8	0.0	22.2	3.91	20.9	3.80	19.5	3.69	18.8	3.62	18.0	3.55	16.7	3.38	15.3	3.20
	2.8	2.0	22.2	3.64	20.9	3.53	19.5	3.41	18.8	3.35	18.0	3.27	16.7	3.13	15.3	2.97
	6.0	5.0	22.2	3.16	20.9	3.08	19.5	2.98	18.8	2.93	18.0	2.88	16.7	2.77	15.3	2.64
	7.0	6.0	22.2	3.01	20.9	2.93	19.5	2.85	18.8	2.81	18.0	2.76	16.7	2.65	15.3	2.54
	8.6	7.5	22.2	2.82	20.9	2.72	19.5	2.66	18.8	2.61	18.0	2.57	16.7	2.48	15.3	2.38
	11.2	10.0	22.2	2.82	20.9	2.68	19.5	2.54	18.8	2.47	18.0	2.40	16.7	2.26	15.3	2.14
	16.4	15.0	22.2	2.82	20.9	2.68	19.5	2.54	18.8	2.47	18.0	2.40	16.7	2.26	15.3	2.12

Combination(%) :Indoor/outdoor capacity ratio	Outdoor air temp.		Indoor air temp. :℃WB													
			15.0		17.0		19.0		20.0		21.0		23.0		25.0	
			TC	PI	TC	PI	TC	PI	TC	PI	TC	PI	TC	PI	TC	PI
	°CDB	°CWB	kW	kW	kW	kW	kW	kW	kW	kW	kW	kW	kW	kW	kW	kW
40%	-24.9	-25.0	17.8	4.67	16.7	4.56	15.6	4.43	15.0	4.37	14.4	4.30	13.4	4.16	12.2	4.02
	-19.8	-20.0	17.8	4.43	16.7	4.34	15.6	4.25	15.0	4.18	14.4	4.11	13.4	3.96	12.2	3.82
	-14.7	-15.0	17.8	4.15	16.7	4.08	15.6	4.00	15.0	3.95	14.4	3.89	13.4	3.77	12.2	3.61
	-9.6	-10.0	17.8	3.82	16.7	3.76	15.6	3.69	15.0	3.65	14.4	3.60	13.4	3.50	12.2	3.38
	-4.4	-5.0	17.8	3.42	16.7	3.37	15.6	3.31	15.0	3.28	14.4	3.25	13.4	3.10	12.2	2.96
	-1.8	-2.5	17.8	3.19	16.7	3.15	15.6	3.06	15.0	3.01	14.4	2.96	13.4	2.84	12.2	2.72
	0.8	0.0	17.8	2.91	16.7	2.84	15.6	2.77	15.0	2.73	14.4	2.69	13.4	2.60	12.2	2.49
	2.8	2.0	17.8	2.66	16.7	2.60	15.6	2.55	15.0	2.51	14.4	2.48	13.4	2.40	12.2	2.31
	6.0	5.0	17.8	2.37	16.7	2.26	15.6	2.23	15.0	2.21	14.4	2.18	13.4	2.12	12.2	2.06
	7.0	6.0	17.8	2.37	16.7	2.26	15.6	2.15	15.0	2.11	14.4	2.09	13.4	2.04	12.2	1.97
	8.6	7.5	17.8	2.37	16.7	2.26	15.6	2.15	15.0	2.09	14.4	2.04	13.4	1.92	12.2	1.86
	11.2	10.0	17.8	2.37	16.7	2.26	15.6	2.15	15.0	2.09	14.4	2.04	13.4	1.92	12.2	1.81
	16.4	15.0	17.8	2.37	16.7	2.26	15.6	2.15	15.0	2.09	14.4	2.04	13.4	1.92	12.2	1.81

Combination(%) :Indoor/outdoor capacity ratio	Outdoor air temp.		Indoor air temp. :℃WB													
			15.0		17.0		19.0		20.0		21.0		23.0		25.0	
			TC	PI	TC	PI	TC	PI	TC	PI	TC	PI	TC	PI	TC	PI
	°CDB	°CWB	kW	kW	kW	kW	kW	kW	kW	kW	kW	kW	kW	kW	kW	kW
30%	-24.9	-25.0	13.4	3.57	12.5	3.53	11.7	3.46	11.3	3.41	10.8	3.37	10.0	3.29	9.2	3.19
	-19.8	-20.0	13.4	3.38	12.5	3.35	11.7	3.30	11.3	3.26	10.8	3.22	10.0	3.12	9.2	3.02
	-14.7	-15.0	13.4	3.16	12.5	3.14	11.7	3.09	11.3	3.07	10.8	3.04	10.0	2.96	9.2	2.86
	-9.6	-10.0	13.4	2.89	12.5	2.87	11.7	2.85	11.3	2.83	10.8	2.78	10.0	2.68	9.2	2.57
	-4.4	-5.0	13.4	2.51	12.5	2.47	11.7	2.42	11.3	2.39	10.8	2.36	10.0	2.29	9.2	2.21
	-1.8	-2.5	13.4	2.27	12.5	2.24	11.7	2.21	11.3	2.18	10.8	2.16	10.0	2.11	9.2	2.04
	0.8	0.0	13.4	2.03	12.5	2.02	11.7	2.00	11.3	1.98	10.8	1.96	10.0	1.92	9.2	1.87
	2.8	2.0	13.4	1.92	12.5	1.85	11.7	1.84	11.3	1.83	10.8	1.82	10.0	1.79	9.2	1.75
	6.0	5.0	13.4	1.92	12.5	1.84	11.7	1.75	11.3	1.71	10.8	1.67	10.0	1.59	9.2	1.56
	7.0	6.0	13.4	1.92	12.5	1.84	11.7	1.75	11.3	1.71	10.8	1.67	10.0	1.59	9.2	1.51
	8.6	7.5	13.4	1.92	12.5	1.84	11.7	1.75	11.3	1.71	10.8	1.67	10.0	1.59	9.2	1.51
	11.2	10.0	13.4	1.92	12.5	1.84	11.7	1.75	11.3	1.71	10.8	1.67	10.0	1.59	9.2	1.51
	16.4	15.0	13.4	1.92	12.5	1.84	11.7	1.75	11.3	1.71	10.8	1.67	10.0	1.59	9.2	1.51

2. Capacity Raito of Outdoor Unit (High-COP mode)

2-5. U-18ME1E81 (Cooling)

Capacity Ratio 30-130%

TC: Total capacity (kW), PI: Power input (kW)

Combination(%) :Indoor/outdoor capacity ratio	Outdoor air temp. °C DB	Indoor air temp. :℃WB													
		16.0		17.0		18.0		19.0		20.0		21.0		22.0	
		TC	PI	TC	PI	TC	PI	TC	PI	TC	PI	TC	PI	TC	PI
		kW	kW	kW	kW	kW	kW	kW	kW	kW	kW	kW	kW	kW	kW
130% or more	-10.0	43.0	5.12	43.0	5.12	43.0	5.12	43.0	5.12	45.9	5.46	48.7	5.81	51.6	6.15
	-5.0	43.0	5.13	43.0	5.13	43.0	5.13	43.0	5.13	45.9	5.47	48.7	5.82	51.6	6.16
	0.0	43.0	5.14	43.0	5.14	43.0	5.14	43.0	5.14	45.9	5.49	48.7	5.83	51.6	6.18
	5.0	43.0	5.16	43.0	5.16	43.0	5.16	43.0	5.16	45.9	5.51	48.7	5.87	51.6	6.22
	10.0	43.0	5.22	43.0	5.22	43.0	5.22	43.0	5.22	45.9	5.58	48.7	5.94	51.6	6.30
	15.0	43.0	5.35	43.0	5.35	43.0	5.35	43.0	5.35	45.9	5.74	48.7	6.13	51.6	6.52
	20.0	43.0	5.90	43.0	5.90	43.0	5.90	43.0	5.90	45.9	6.47	48.7	7.08	51.6	7.70
	25.0	43.0	7.46	43.0	7.46	43.0	7.46	43.0	7.46	45.9	8.15	48.7	8.89	51.6	9.66
	30.0	43.0	9.15	43.0	9.15	43.0	9.15	43.0	9.15	45.9	9.99	48.7	10.87	51.6	11.79
	35.0	43.0	11.01	43.0	11.01	43.0	11.01	43.0	11.01	45.9	12.00	48.6	12.96	49.6	12.97
	40.0	42.7	12.90	42.7	12.90	42.7	12.90	42.7	12.90	43.9	12.97	44.8	12.97	45.8	12.97
	43.0	40.9	12.97	40.9	12.97	40.9	12.97	40.9	12.97	41.8	12.97	42.7	12.97	43.7	12.97

Combination(%) :Indoor/outdoor capacity ratio	Outdoor air temp. °C DB	Indoor air temp. :℃WB													
		16.0		17.0		18.0		19.0		20.0		21.0		22.0	
		TC	PI	TC	PI	TC	PI	TC	PI	TC	PI	TC	PI	TC	PI
		kW	kW	kW	kW	kW	kW	kW	kW	kW	kW	kW	kW	kW	kW
120%	-10.0	40.3	4.79	42.0	5.00	42.0	5.00	42.0	5.00	44.8	5.33	47.6	5.67	50.4	6.01
	-5.0	40.3	4.80	42.0	5.01	42.0	5.01	42.0	5.01	44.8	5.34	47.6	5.68	50.4	6.02
	0.0	40.3	4.80	42.0	5.02	42.0	5.02	42.0	5.02	44.8	5.36	47.6	5.70	50.4	6.04
	5.0	40.3	4.82	42.0	5.04	42.0	5.04	42.0	5.04	44.8	5.38	47.6	5.73	50.4	6.07
	10.0	40.3	4.84	42.0	5.09	42.0	5.09	42.0	5.09	44.8	5.44	47.6	5.79	50.4	6.15
	15.0	40.3	4.92	42.0	5.22	42.0	5.22	42.0	5.22	44.8	5.59	47.6	5.97	50.4	6.36
	20.0	40.3	5.17	42.0	5.70	42.0	5.70	42.0	5.70	44.8	6.25	47.6	6.83	50.4	7.43
	25.0	40.3	6.33	42.0	7.21	42.0	7.21	42.0	7.21	44.8	7.88	47.6	8.58	50.4	9.32
	30.0	40.3	7.83	42.0	8.85	42.0	8.85	42.0	8.85	44.8	9.66	47.6	10.51	50.4	11.39
	35.0	40.3	9.49	42.0	10.66	42.0	10.66	42.0	10.66	44.8	11.62	47.6	12.60	49.2	12.97
	40.0	40.3	11.29	42.0	12.60	42.0	12.60	42.0	12.60	43.6	12.97	44.5	12.97	45.5	12.97
	43.0	40.3	12.43	40.6	12.97	40.6	12.97	40.6	12.97	41.5	12.97	42.4	12.97	43.4	12.97

Combination(%) :Indoor/outdoor capacity ratio	Outdoor air temp. °C DB	Indoor air temp. :℃WB													
		16.0		17.0		18.0		19.0		20.0		21.0		22.0	
		TC	PI	TC	PI	TC	PI	TC	PI	TC	PI	TC	PI	TC	PI
		kW	kW	kW	kW	kW	kW	kW	kW	kW	kW	kW	kW	kW	kW
110%	-10.0	36.1	4.29	39.1	4.65	41.0	4.88	41.0	4.88	43.7	5.21	46.5	5.53	49.2	5.86
	-5.0	36.1	4.29	39.1	4.65	41.0	4.89	41.0	4.89	43.7	5.22	46.5	5.54	49.2	5.87
	0.0	36.1	4.30	39.1	4.66	41.0	4.90	41.0	4.90	43.7	5.23	46.5	5.56	49.2	5.89
	5.0	36.1	4.31	39.1	4.68	41.0	4.92	41.0	4.92	43.7	5.25	46.5	5.59	49.2	5.92
	10.0	36.1	4.34	39.1	4.71	41.0	4.96	41.0	4.96	43.7	5.31	46.5	5.65	49.2	6.00
	15.0	36.1	4.40	39.1	4.79	41.0	5.08	41.0	5.08	43.7	5.45	46.5	5.82	49.2	6.19
	20.0	36.1	4.65	39.1	5.09	41.0	5.51	41.0	5.51	43.7	6.03	46.5	6.58	49.2	7.16
	25.0	36.1	5.67	39.1	6.29	41.0	6.97	41.0	6.97	43.7	7.61	46.5	8.28	49.2	8.99
	30.0	36.1	7.02	39.1	7.76	41.0	8.56	41.0	8.56	43.7	9.34	46.5	10.15	49.2	10.99
	35.0	36.1	8.49	39.1	9.38	41.0	10.32	41.0	10.32	43.7	11.24	46.5	12.19	48.8	12.97
	40.0	36.1	10.09	39.1	11.14	41.0	12.21	41.0	12.21	43.2	12.97	44.2	12.97	45.1	12.97
	43.0	36.1	11.11	39.1	12.26	40.3	12.97	40.3	12.97	41.2	12.97	42.1	12.97	43.0	12.97

2. Capacity Raito of Outdoor Unit (High-COP mode)

U-18ME1E81 (Cooling)

Capacity Ratio 30-130%

TC: Total capacity (kW), PI: Power input (kW)

Combination(%) :Indoor/outdoor capacity ratio	Outdoor air temp. °C DB	Indoor air temp. :°CWB													
		16.0		17.0		18.0		19.0		20.0		21.0		22.0	
		TC	PI	TC	PI	TC	PI	TC	PI	TC	PI	TC	PI	TC	PI
		kW	kW	kW	kW	kW	kW	kW	kW	kW	kW	kW	kW	kW	kW
100%	-10.0	32.0	3.81	34.7	4.12	37.3	4.44	40.0	4.76	42.7	5.08	45.3	5.40	48.0	5.72
	-5.0	32.0	3.81	34.7	4.13	37.3	4.45	40.0	4.77	42.7	5.09	45.3	5.41	48.0	5.73
	0.0	32.0	3.81	34.7	4.13	37.3	4.46	40.0	4.78	42.7	5.10	45.3	5.42	48.0	5.74
	5.0	32.0	3.83	34.7	4.15	37.3	4.47	40.0	4.80	42.7	5.12	45.3	5.45	48.0	5.78
	10.0	32.0	3.85	34.7	4.18	37.3	4.51	40.0	4.84	42.7	5.17	45.3	5.51	48.0	5.84
	15.0	32.0	3.91	34.7	4.25	37.3	4.60	40.0	4.95	42.7	5.30	45.3	5.66	48.0	6.02
	20.0	32.0	4.14	34.7	4.53	37.3	4.93	40.0	5.35	42.7	5.82	45.3	6.34	48.0	6.89
	25.0	32.0	5.05	34.7	5.59	37.3	6.15	40.0	6.74	42.7	7.35	45.3	7.99	48.0	8.66
	30.0	32.0	6.25	34.7	6.90	37.3	7.57	40.0	8.28	42.7	9.02	45.3	9.80	48.0	10.61
	35.0	32.0	7.54	34.7	8.32	37.3	9.13	40.0	9.98	42.7	10.86	45.3	11.78	48.0	12.72
	40.0	32.0	8.96	34.7	9.87	37.3	10.83	40.0	11.82	42.7	12.83	43.8	12.97	44.8	12.97
	43.0	32.0	9.86	34.7	10.86	37.3	11.90	39.8	12.89	40.9	12.97	41.8	12.97	42.7	12.97

Combination(%) :Indoor/outdoor capacity ratio	Outdoor air temp. °C DB	Indoor air temp. :°CWB													
		16.0		17.0		18.0		19.0		20.0		21.0		22.0	
		TC	PI	TC	PI	TC	PI	TC	PI	TC	PI	TC	PI	TC	PI
		kW	kW	kW	kW	kW	kW	kW	kW	kW	kW	kW	kW	kW	kW
90%	-10.0	28.8	3.42	31.2	3.71	33.6	4.00	36.0	4.28	38.4	4.57	40.8	4.86	43.2	5.14
	-5.0	28.8	3.43	31.2	3.71	33.6	4.00	36.0	4.29	38.4	4.57	40.8	4.86	43.2	5.15
	0.0	28.8	3.43	31.2	3.72	33.6	4.01	36.0	4.30	38.4	4.58	40.8	4.87	43.2	5.16
	5.0	28.8	3.44	31.2	3.73	33.6	4.02	36.0	4.31	38.4	4.60	40.8	4.89	43.2	5.19
	10.0	28.8	3.46	31.2	3.75	33.6	4.05	36.0	4.34	38.4	4.64	40.8	4.94	43.2	5.24
	15.0	28.8	3.50	31.2	3.81	33.6	4.11	36.0	4.42	38.4	4.74	40.8	5.05	43.2	5.37
	20.0	28.8	3.67	31.2	4.01	33.6	4.36	36.0	4.72	38.4	5.08	40.8	5.46	43.2	5.88
	25.0	28.8	4.43	31.2	4.88	33.6	5.35	36.0	5.84	38.4	6.35	40.8	6.89	43.2	7.44
	30.0	28.8	5.49	31.2	6.04	33.6	6.61	36.0	7.20	38.4	7.82	40.8	8.46	43.2	9.13
	35.0	28.8	6.64	31.2	7.30	33.6	7.97	36.0	8.69	38.4	9.43	40.8	10.20	43.2	10.99
	40.0	28.8	7.88	31.2	8.66	33.6	9.47	36.0	10.31	38.4	11.18	40.8	12.07	42.9	12.90
	43.0	28.8	8.68	31.2	9.53	33.6	10.42	36.0	11.34	38.4	12.28	40.4	12.97	41.2	12.97

Combination(%) :Indoor/outdoor capacity ratio	Outdoor air temp. °C DB	Indoor air temp. :°CWB													
		16.0		17.0		18.0		19.0		20.0		21.0		22.0	
		TC	PI	TC	PI	TC	PI	TC	PI	TC	PI	TC	PI	TC	PI
		kW	kW	kW	kW	kW	kW	kW	kW	kW	kW	kW	kW	kW	kW
80%	-10.0	25.6	3.04	27.7	3.30	29.9	3.55	32.0	3.81	34.1	4.06	36.3	4.31	38.4	4.57
	-5.0	25.6	3.04	27.7	3.30	29.9	3.55	32.0	3.81	34.1	4.06	36.3	4.32	38.4	4.57
	0.0	25.6	3.05	27.7	3.30	29.9	3.56	32.0	3.81	34.1	4.07	36.3	4.33	38.4	4.58
	5.0	25.6	3.05	27.7	3.31	29.9	3.57	32.0	3.83	34.1	4.08	36.3	4.34	38.4	4.60
	10.0	25.6	3.07	27.7	3.33	29.9	3.59	32.0	3.85	34.1	4.11	36.3	4.37	38.4	4.64
	15.0	25.6	3.10	27.7	3.37	29.9	3.64	32.0	3.91	34.1	4.18	36.3	4.46	38.4	4.73
	20.0	25.6	3.22	27.7	3.51	29.9	3.81	32.0	4.12	34.1	4.43	36.3	4.75	38.4	5.07
	25.0	25.6	3.86	27.7	4.23	29.9	4.61	32.0	5.01	34.1	5.43	36.3	5.86	38.4	6.31
	30.0	25.6	4.78	27.7	5.23	29.9	5.70	32.0	6.20	34.1	6.71	36.3	7.24	38.4	7.77
	35.0	25.6	5.78	27.7	6.33	29.9	6.90	32.0	7.49	34.1	8.09	36.3	8.73	38.4	9.38
	40.0	25.6	6.87	27.7	7.52	29.9	8.19	32.0	8.89	34.1	9.61	36.3	10.36	38.4	11.12
	43.0	25.6	7.56	27.7	8.28	29.9	9.02	32.0	9.79	34.1	10.58	36.3	11.39	38.4	12.23

Combination(%) :Indoor/outdoor capacity ratio	Outdoor air temp. °C DB	Indoor air temp. :°CWB													
		16.0		17.0		18.0		19.0		20.0		21.0		22.0	
		TC	PI	TC	PI	TC	PI	TC	PI	TC	PI	TC	PI	TC	PI
		kW	kW	kW	kW	kW	kW	kW	kW	kW	kW	kW	kW	kW	kW
70%	-10.0	22.4	2.66	24.3	2.88	26.1	3.10	28.0	3.33	29.9	3.55	31.7	3.77	33.6	4.00
	-5.0	22.4	2.66	24.3	2.88	26.1	3.11	28.0	3.33	29.9	3.55	31.7	3.78	33.6	4.00
	0.0	22.4	2.66	24.3	2.89	26.1	3.11	28.0	3.34	29.9	3.56	31.7	3.78	33.6	4.01
	5.0	22.4	2.67	24.3	2.89	26.1	3.12	28.0	3.34	29.9	3.57	31.7	3.79	33.6	4.02
	10.0	22.4	2.68	24.3	2.91	26.1	3.13	28.0	3.36	29.9	3.59	31.7	3.81	33.6	4.04
	15.0	22.4	2.70	24.3	2.93	26.1	3.17	28.0	3.40	29.9	3.63	31.7	3.87	33.6	4.11
	20.0	22.4	2.78	24.3	3.03	26.1	3.29	28.0	3.54	29.9	3.81	31.7	4.07	33.6	4.34
	25.0	22.4	3.32	24.3	3.62	26.1	3.93	28.0	4.25	29.9	4.58	31.7	4.93	33.6	5.29
	30.0	22.4	4.11	24.3	4.48	26.1	4.87	28.0	5.26	29.9	5.67	31.7	6.10	33.6	6.54
	35.0	22.4	4.97	24.3	5.42	26.1	5.89	28.0	6.37	29.9	6.86	31.7	7.38	33.6	7.89
	40.0	22.4	5.91	24.3	6.45	26.1	7.00	28.0	7.57	29.9	8.15	31.7	8.76	33.6	9.38
	43.0	22.4	6.51	24.3	7.10	26.1	7.70	28.0	8.33	29.9	8.98	31.7	9.64	33.6	10.32

2. Capacity Raito of Outdoor Unit (High-COP mode)

U-18ME1E81 (Cooling) **Capacity Ratio 30-130%**

TC: Total capacity (kW), PI: Power input (kW)

Combination(%) :Indoor/outdoor capacity ratio	Outdoor air temp. °C DB	Indoor air temp. :°CWB													
		16.0		17.0		18.0		19.0		20.0		21.0		22.0	
		TC	PI	TC	PI	TC	PI	TC	PI	TC	PI	TC	PI	TC	PI
		kW	kW	kW	kW	kW	kW	kW	kW	kW	kW	kW	kW	kW	kW
60%	-10.0	19.2	2.29	20.8	2.48	22.4	2.66	24.0	2.85	25.6	3.04	27.2	3.23	28.8	3.42
	-5.0	19.2	2.29	20.8	2.48	22.4	2.66	24.0	2.85	25.6	3.04	27.2	3.24	28.8	3.43
	0.0	19.2	2.29	20.8	2.48	22.4	2.66	24.0	2.86	25.6	3.05	27.2	3.24	28.8	3.43
	5.0	19.2	2.30	20.8	2.49	22.4	2.67	24.0	2.86	25.6	3.05	27.2	3.25	28.8	3.44
	10.0	19.2	2.30	20.8	2.49	22.4	2.68	24.0	2.87	25.6	3.07	27.2	3.26	28.8	3.46
	15.0	19.2	2.32	20.8	2.50	22.4	2.70	24.0	2.90	25.6	3.10	27.2	3.30	28.8	3.50
	20.0	19.2	2.37	20.8	2.57	22.4	2.78	24.0	2.99	25.6	3.21	27.2	3.43	28.8	3.65
	25.0	19.2	2.74	20.8	3.02	22.4	3.32	24.0	3.55	25.6	3.81	27.2	4.08	28.8	4.36
	30.0	19.2	3.49	20.8	3.78	22.4	4.09	24.0	4.40	25.6	4.72	27.2	5.06	28.8	5.40
	35.0	19.2	4.21	20.8	4.57	22.4	4.94	24.0	5.33	25.6	5.72	27.2	6.12	28.8	6.54
	40.0	19.2	5.00	20.8	5.44	22.4	5.88	24.0	6.34	25.6	6.81	27.2	7.29	28.8	7.77
	43.0	19.2	5.51	20.8	5.99	22.4	6.48	24.0	6.98	25.6	7.49	27.2	8.02	28.8	8.56

Combination(%) :Indoor/outdoor capacity ratio	Outdoor air temp. °C DB	Indoor air temp. :°CWB													
		16.0		17.0		18.0		19.0		20.0		21.0		22.0	
		TC	PI	TC	PI	TC	PI	TC	PI	TC	PI	TC	PI	TC	PI
		kW	kW	kW	kW	kW	kW	kW	kW	kW	kW	kW	kW	kW	kW
50%	-10.0	16.0	1.91	17.3	2.07	18.7	2.22	20.0	2.38	21.3	2.53	22.7	2.69	24.0	2.85
	-5.0	16.0	1.91	17.3	2.07	18.7	2.23	20.0	2.39	21.3	2.53	22.7	2.69	24.0	2.85
	0.0	16.0	1.91	17.3	2.07	18.7	2.23	20.0	2.39	21.3	2.54	22.7	2.70	24.0	2.86
	5.0	16.0	1.91	17.3	2.07	18.7	2.23	20.0	2.39	21.3	2.54	22.7	2.70	24.0	2.86
	10.0	16.0	1.92	17.3	2.08	18.7	2.24	20.0	2.40	21.3	2.55	22.7	2.71	24.0	2.87
	15.0	16.0	1.93	17.3	2.09	18.7	2.25	20.0	2.41	21.3	2.57	22.7	2.73	24.0	2.90
	20.0	16.0	1.96	17.3	2.13	18.7	2.30	20.0	2.47	21.3	2.63	22.7	2.81	24.0	2.99
	25.0	16.0	2.18	17.3	2.40	18.7	2.61	20.0	2.84	21.3	3.08	22.7	3.32	24.0	3.52
	30.0	16.0	2.91	17.3	3.14	18.7	3.37	20.0	3.61	21.3	3.86	22.7	4.11	24.0	4.37
	35.0	16.0	3.50	17.3	3.78	18.7	4.07	20.0	4.36	21.3	4.66	22.7	4.97	24.0	5.29
	40.0	16.0	4.15	17.3	4.49	18.7	4.83	20.0	5.19	21.3	5.55	22.7	5.92	24.0	6.29
	43.0	16.0	4.56	17.3	4.94	18.7	5.32	20.0	5.71	21.3	6.11	22.7	6.52	24.0	6.93

Combination(%) :Indoor/outdoor capacity ratio	Outdoor air temp. °C DB	Indoor air temp. :°CWB													
		16.0		17.0		18.0		19.0		20.0		21.0		22.0	
		TC	PI	TC	PI	TC	PI	TC	PI	TC	PI	TC	PI	TC	PI
		kW	kW	kW	kW	kW	kW	kW	kW	kW	kW	kW	kW	kW	kW
40%	-10.0	12.8	1.52	13.9	1.65	14.9	1.78	16.0	1.91	17.1	2.03	18.1	2.16	19.2	2.29
	-5.0	12.8	1.53	13.9	1.65	14.9	1.78	16.0	1.91	17.1	2.03	18.1	2.16	19.2	2.29
	0.0	12.8	1.53	13.9	1.65	14.9	1.78	16.0	1.91	17.1	2.04	18.1	2.16	19.2	2.29
	5.0	12.8	1.53	13.9	1.66	14.9	1.78	16.0	1.91	17.1	2.04	18.1	2.17	19.2	2.30
	10.0	12.8	1.53	13.9	1.66	14.9	1.79	16.0	1.92	17.1	2.05	18.1	2.17	19.2	2.30
	15.0	12.8	1.54	13.9	1.67	14.9	1.80	16.0	1.93	17.1	2.05	18.1	2.19	19.2	2.32
	20.0	12.8	1.56	13.9	1.69	14.9	1.82	16.0	1.96	17.1	2.09	18.1	2.23	19.2	2.36
	25.0	12.8	1.68	13.9	1.83	14.9	2.00	16.0	2.16	17.1	2.33	18.1	2.50	19.2	2.66
	30.0	12.8	2.39	13.9	2.54	14.9	2.71	16.0	2.89	17.1	3.07	18.1	3.25	19.2	3.43
	35.0	12.8	2.84	13.9	3.05	14.9	3.26	16.0	3.48	17.1	3.70	18.1	3.92	19.2	4.15
	40.0	12.8	3.35	13.9	3.60	14.9	3.86	16.0	4.12	17.1	4.38	18.1	4.65	19.2	4.93
	43.0	12.8	3.67	13.9	3.95	14.9	4.24	16.0	4.53	17.1	4.83	18.1	5.13	19.2	5.43

Combination(%) :Indoor/outdoor capacity ratio	Outdoor air temp. °C DB	Indoor air temp. :°CWB													
		16.0		17.0		18.0		19.0		20.0		21.0		22.0	
		TC	PI	TC	PI	TC	PI	TC	PI	TC	PI	TC	PI	TC	PI
		kW	kW	kW	kW	kW	kW	kW	kW	kW	kW	kW	kW	kW	kW
30%	-10.0	9.6	1.14	10.4	1.24	11.2	1.33	12.0	1.43	12.8	1.52	13.6	1.62	14.4	1.72
	-5.0	9.6	1.14	10.4	1.24	11.2	1.34	12.0	1.43	12.8	1.53	13.6	1.62	14.4	1.72
	0.0	9.6	1.15	10.4	1.24	11.2	1.34	12.0	1.43	12.8	1.53	13.6	1.62	14.4	1.72
	5.0	9.6	1.15	10.4	1.24	11.2	1.34	12.0	1.43	12.8	1.53	13.6	1.62	14.4	1.72
	10.0	9.6	1.15	10.4	1.24	11.2	1.34	12.0	1.44	12.8	1.53	13.6	1.63	14.4	1.72
	15.0	9.6	1.15	10.4	1.25	11.2	1.35	12.0	1.44	12.8	1.54	13.6	1.64	14.4	1.73
	20.0	9.6	1.16	10.4	1.26	11.2	1.36	12.0	1.46	12.8	1.56	13.6	1.65	14.4	1.75
	25.0	9.6	1.22	10.4	1.32	11.2	1.44	12.0	1.55	12.8	1.66	13.6	1.77	14.4	1.89
	30.0	9.6	1.89	10.4	2.01	11.2	2.12	12.0	2.24	12.8	2.36	13.6	2.48	14.4	2.60
	35.0	9.6	2.23	10.4	2.38	11.2	2.51	12.0	2.66	12.8	2.81	13.6	2.97	14.4	3.12
	40.0	9.6	2.60	10.4	2.77	11.2	2.95	12.0	3.13	12.8	3.32	13.6	3.50	14.4	3.69
	43.0	9.6	2.84	10.4	3.03	11.2	3.23	12.0	3.43	12.8	3.64	13.6	3.85	14.4	4.05

2. Capacity Raito of Outdoor Unit (High-COP mode)

2-6. U-18ME1E81 (Heatling)

Capacity Ratio 30-130%

TC: Total capacity (kW), PI: Power input (kW)

Combination(%) :Indoor/outdoor capacity ratio	Outdoor air temp.		Indoor air temp. : °CWB													
			15.0		17.0		19.0		20.0		21.0		23.0		25.0	
			TC	PI	TC	PI	TC	PI	TC	PI	TC	PI	TC	PI	TC	PI
	°CDB	°CWB	kW	kW	kW	kW	kW	kW	kW	kW	kW	kW	kW	kW	kW	kW
130% or more	-24.9	-25.0	34.5	11.45	32.6	10.75	30.7	10.07	29.7	9.73	29.7	9.73	29.7	9.73	29.7	9.73
	-19.8	-20.0	36.4	11.68	34.4	10.98	32.4	10.28	31.4	9.93	31.4	9.93	31.4	9.93	31.4	9.93
	-14.7	-15.0	38.6	12.00	36.5	11.27	34.5	10.56	33.4	10.20	33.4	10.20	33.4	10.20	33.4	10.20
	-9.6	-10.0	41.4	12.41	39.2	11.67	37.0	10.92	35.9	10.55	35.9	10.55	35.9	10.55	35.9	10.55
	-4.4	-5.0	45.0	12.97	42.8	12.19	40.4	11.40	39.2	11.02	39.2	11.02	39.2	11.02	39.2	11.02
	-1.8	-2.5	47.2	13.26	44.9	12.52	42.5	11.70	41.2	11.30	41.2	11.30	41.2	11.30	41.2	11.30
	0.8	0.0	49.1	13.26	47.5	12.89	45.0	12.08	43.7	11.67	43.7	11.67	43.7	11.67	43.7	11.67
	2.8	2.0	50.8	13.26	50.0	13.26	47.5	12.48	46.2	12.08	46.2	12.08	46.2	12.08	46.2	12.08
	6.0	5.0	53.9	13.26	52.9	13.26	50.2	12.52	48.4	11.96	48.4	11.96	48.4	11.96	48.4	11.96
	7.0	6.0	54.8	13.26	53.7	13.26	50.2	12.16	48.4	11.62	48.4	11.62	48.4	11.62	48.4	11.62
	8.6	7.5	56.3	13.26	53.7	12.64	50.2	11.55	48.4	11.02	48.4	11.02	48.4	11.02	48.4	11.02
	11.2	10.0	57.3	12.50	53.7	11.46	50.2	10.47	48.4	9.99	48.4	9.99	48.4	9.99	48.4	9.99
	16.4	15.0	57.3	10.16	53.7	9.32	50.2	8.53	48.4	8.14	48.4	8.14	48.4	8.14	48.4	8.14

Combination(%) :Indoor/outdoor capacity ratio	Outdoor air temp.		Indoor air temp. : °CWB													
			15.0		17.0		19.0		20.0		21.0		23.0		25.0	
			TC	PI	TC	PI	TC	PI	TC	PI	TC	PI	TC	PI	TC	PI
	°CDB	°CWB	kW	kW	kW	kW	kW	kW	kW	kW	kW	kW	kW	kW	kW	kW
120%	-24.9	-25.0	34.6	11.35	32.7	10.68	30.8	10.01	29.8	9.67	29.8	9.67	29.8	9.67	29.8	9.61
	-19.8	-20.0	36.5	11.60	34.5	10.90	32.5	10.22	31.5	9.87	31.5	9.87	31.5	9.87	31.5	9.87
	-14.7	-15.0	38.7	11.91	36.6	11.20	34.5	10.50	33.5	10.14	33.5	10.14	33.5	10.14	33.5	10.14
	-9.6	-10.0	41.5	12.34	39.3	11.60	37.1	10.86	36.0	10.50	36.0	10.50	36.0	10.50	36.0	10.50
	-4.4	-5.0	45.1	12.89	42.8	12.12	40.5	11.34	39.2	10.95	39.2	10.95	39.2	10.95	39.2	10.95
	-1.8	-2.5	47.4	13.24	45.0	12.43	42.5	11.64	41.3	11.24	41.3	11.24	41.3	11.24	41.3	11.24
	0.8	0.0	49.3	13.26	47.6	12.82	45.0	12.02	43.7	11.61	43.7	11.61	43.7	11.61	43.7	11.61
	2.8	2.0	51.0	13.26	50.1	13.23	47.5	12.42	46.2	12.03	46.2	12.03	46.2	12.03	46.2	11.59
	6.0	5.0	53.9	13.26	52.5	13.10	49.0	12.02	47.3	11.50	47.3	11.50	47.3	11.50	46.2	10.70
	7.0	6.0	54.8	13.26	52.5	12.71	49.0	11.68	47.3	11.15	47.3	11.15	47.3	11.15	46.2	10.31
	8.6	7.5	56.0	13.14	52.5	12.08	49.0	11.04	47.3	10.54	47.3	10.54	47.3	10.54	46.2	9.74
	11.2	10.0	56.0	11.90	52.5	10.93	49.0	10.00	47.3	9.55	47.3	9.55	47.3	9.55	46.2	8.83
	16.4	15.0	56.0	9.65	52.5	8.87	49.0	8.12	47.3	7.76	47.3	7.76	47.3	7.76	46.2	7.19

Combination(%) :Indoor/outdoor capacity ratio	Outdoor air temp.		Indoor air temp. : °CWB													
			15.0		17.0		19.0		20.0		21.0		23.0		25.0	
			TC	PI	TC	PI	TC	PI	TC	PI	TC	PI	TC	PI	TC	PI
	°CDB	°CWB	kW	kW	kW	kW	kW	kW	kW	kW	kW	kW	kW	kW	kW	kW
110%	-24.9	-25.0	34.7	11.27	32.8	10.61	30.9	9.95	29.9	9.62	29.9	9.62	29.6	9.50	27.4	8.81
	-19.8	-20.0	36.5	11.52	34.6	10.84	32.6	10.16	31.5	9.82	31.5	9.82	31.3	9.69	28.9	8.99
	-14.7	-15.0	38.8	11.83	36.7	11.14	34.6	10.44	33.5	10.10	33.5	10.10	33.3	9.93	30.8	9.20
	-9.6	-10.0	41.6	12.27	39.4	11.54	37.2	10.81	36.0	10.44	36.0	10.44	35.8	10.27	33.2	9.50
	-4.4	-5.0	45.2	12.82	42.9	12.06	40.5	11.28	39.3	10.90	39.3	10.90	39.1	10.70	36.3	9.88
	-1.8	-2.5	47.5	13.16	45.0	12.37	42.6	11.59	41.3	11.19	41.3	11.19	41.2	10.99	38.3	10.14
	0.8	0.0	49.5	13.26	47.7	12.76	45.1	11.95	43.8	11.56	43.8	11.56	43.7	11.36	40.7	10.50
	2.8	2.0	51.3	13.26	50.2	13.19	47.6	12.38	46.1	11.92	46.1	11.92	45.1	11.35	41.4	10.26
	6.0	5.0	53.9	13.26	51.3	12.55	47.8	11.54	46.1	11.05	46.1	11.05	45.1	10.49	41.4	9.45
	7.0	6.0	54.7	13.20	51.3	12.19	47.8	11.17	46.1	10.67	46.1	10.67	45.1	10.11	41.4	9.10
	8.6	7.5	54.7	12.53	51.3	11.52	47.8	10.54	46.1	10.07	46.1	10.07	45.1	9.55	41.4	8.60
	11.2	10.0	54.7	11.32	51.3	10.41	47.8	9.55	46.1	9.12	46.1	9.12	45.1	8.65	41.4	7.79
	16.4	15.0	54.7	9.16	51.3	8.43	47.8	7.73	46.1	7.40	46.1	7.40	45.1	7.02	41.4	6.33

2. Capacity Raito of Outdoor Unit (High-COP mode)

U-18ME1E81 (Heatling) **Capacity Ratio 30-130%**

TC: Total capacity (kW), PI: Power input (kW)

Combination(%) :Indoor/outdoor capacity ratio	Outdoor air temp.		Indoor air temp. :℃WB													
			15.0		17.0		19.0		20.0		21.0		23.0		25.0	
			TC	PI	TC	PI	TC	PI	TC	PI	TC	PI	TC	PI	TC	PI
	°CDB	°CWB	kW	kW	kW	kW	kW	kW	kW	kW	kW	kW	kW	kW	kW	kW
100%	-24.9	-25.0	34.8	11.20	32.9	10.54	30.9	9.89	30.0	9.58	28.9	9.26	27.0	8.64	24.9	8.04
	-19.8	-20.0	36.7	11.44	34.7	10.78	32.6	10.11	31.6	9.78	30.6	9.46	28.5	8.81	26.3	8.19
	-14.7	-15.0	38.9	11.77	36.8	11.09	34.7	10.39	33.6	10.06	32.5	9.71	30.3	9.05	28.1	8.38
	-9.6	-10.0	41.7	12.21	39.5	11.48	37.3	10.76	36.1	10.40	35.0	10.05	32.6	9.34	30.2	8.65
	-4.4	-5.0	45.3	12.76	43.0	12.00	40.6	11.24	39.4	10.86	38.1	10.49	35.6	9.73	33.0	9.00
	-1.8	-2.5	47.6	13.10	45.1	12.31	42.7	11.54	41.4	11.14	40.1	10.76	37.5	9.99	34.8	9.22
	0.8	0.0	49.7	13.26	47.7	12.71	45.2	11.91	43.8	11.52	42.5	11.12	39.8	10.33	36.7	9.42
	2.8	2.0	51.5	13.26	50.0	13.01	46.7	11.94	45.0	11.42	43.3	10.92	40.0	9.96	36.7	9.03
	6.0	5.0	53.3	13.01	50.0	12.03	46.7	11.06	45.0	10.58	43.3	10.10	40.0	9.17	36.7	8.27
	7.0	6.0	53.3	12.63	50.0	11.63	46.7	10.67	45.0	10.20	43.3	9.73	40.0	8.83	36.7	7.98
	8.6	7.5	53.3	11.91	50.0	10.97	46.7	10.06	45.0	9.62	43.3	9.18	40.0	8.34	36.7	7.53
	11.2	10.0	53.3	10.76	50.0	9.91	46.7	9.10	45.0	8.70	43.3	8.31	40.0	7.55	36.7	6.81
	16.4	15.0	53.3	8.67	50.0	8.00	46.7	7.35	45.0	7.04	43.3	6.73	40.0	6.12	36.7	5.54

Combination(%) :Indoor/outdoor capacity ratio	Outdoor air temp.		Indoor air temp. :℃WB													
			15.0		17.0		19.0		20.0		21.0		23.0		25.0	
			TC	PI	TC	PI	TC	PI	TC	PI	TC	PI	TC	PI	TC	PI
	°CDB	°CWB	kW	kW	kW	kW	kW	kW	kW	kW	kW	kW	kW	kW	kW	kW
90%	-24.9	-25.0	35.3	10.99	33.3	10.37	31.3	9.78	30.3	9.49	29.3	9.19	27.3	8.62	25.2	8.07
	-19.8	-20.0	37.2	11.25	35.1	10.63	33.1	10.02	32.0	9.70	31.0	9.40	28.8	8.80	26.6	8.21
	-14.7	-15.0	39.5	11.61	37.4	10.95	35.1	10.30	34.1	9.98	32.9	9.66	30.6	9.03	28.4	8.40
	-9.6	-10.0	42.3	12.05	40.1	11.36	37.8	10.67	36.6	10.33	35.4	9.99	32.9	9.31	30.5	8.65
	-4.4	-5.0	46.0	12.62	43.6	11.88	41.1	11.14	39.8	10.78	38.5	10.41	36.0	9.69	33.0	8.86
	-1.8	-2.5	48.0	12.85	45.0	11.90	42.0	11.00	40.5	10.55	39.0	10.12	36.0	9.28	33.0	8.48
	0.8	0.0	48.0	12.19	45.0	11.30	42.0	10.46	40.5	10.05	39.0	9.64	36.0	8.84	33.0	8.08
	2.8	2.0	48.0	11.66	45.0	10.83	42.0	10.03	40.5	9.62	39.0	9.22	36.0	8.45	33.0	7.69
	6.0	5.0	48.0	10.66	45.0	9.87	42.0	9.12	40.5	8.74	39.0	8.37	36.0	7.66	33.0	6.96
	7.0	6.0	48.0	10.26	45.0	9.51	42.0	8.77	40.5	8.42	39.0	8.06	36.0	7.36	33.0	6.69
	8.6	7.5	48.0	9.64	45.0	8.94	42.0	8.25	40.5	7.92	39.0	7.59	36.0	6.94	33.0	6.31
	11.2	10.0	48.0	8.66	45.0	8.04	42.0	7.43	40.5	7.13	39.0	6.83	36.0	6.25	33.0	5.69
	16.4	15.0	48.0	6.90	45.0	6.42	42.0	5.95	40.5	5.71	39.0	5.49	36.0	5.04	33.0	4.60

Combination(%) :Indoor/outdoor capacity ratio	Outdoor air temp.		Indoor air temp. :℃WB													
			15.0		17.0		19.0		20.0		21.0		23.0		25.0	
			TC	PI	TC	PI	TC	PI	TC	PI	TC	PI	TC	PI	TC	PI
	°CDB	°CWB	kW	kW	kW	kW	kW	kW	kW	kW	kW	kW	kW	kW	kW	kW
80%	-24.9	-25.0	36.1	10.98	34.1	10.41	32.0	9.85	31.0	9.59	29.9	9.31	27.8	8.77	25.7	8.25
	-19.8	-20.0	38.1	11.29	36.0	10.69	33.8	10.10	32.7	9.81	31.6	9.53	29.4	8.96	27.1	8.40
	-14.7	-15.0	40.5	11.66	38.3	11.03	36.0	10.40	34.8	10.10	33.7	9.79	31.3	9.19	28.9	8.59
	-9.6	-10.0	42.7	11.81	40.0	11.03	37.4	10.27	36.0	9.90	34.7	9.54	32.0	8.83	29.3	8.15
	-4.4	-5.0	42.7	10.91	40.0	10.20	37.4	9.51	36.0	9.16	34.7	8.82	32.0	8.17	29.3	7.53
	-1.8	-2.5	42.7	10.46	40.0	9.78	37.4	9.11	36.0	8.78	34.7	8.47	32.0	7.83	29.3	7.21
	0.8	0.0	42.7	9.93	40.0	9.27	37.4	8.64	36.0	8.32	34.7	8.01	32.0	7.41	29.3	6.81
	2.8	2.0	42.7	9.40	40.0	8.78	37.4	8.18	36.0	7.87	34.7	7.58	32.0	7.01	29.3	6.44
	6.0	5.0	42.7	8.50	40.0	7.94	37.4	7.38	36.0	7.11	34.7	6.83	32.0	6.29	29.3	5.76
	7.0	6.0	42.7	8.16	40.0	7.62	37.4	7.09	36.0	6.82	34.7	6.56	32.0	6.05	29.3	5.54
	8.6	7.5	42.7	7.64	40.0	7.14	37.4	6.64	36.0	6.40	34.7	6.16	32.0	5.68	29.3	5.20
	11.2	10.0	42.7	6.81	40.0	6.38	37.4	5.95	36.0	5.73	34.7	5.52	32.0	5.10	29.3	4.68
	16.4	15.0	42.7	5.34	40.0	5.03	37.4	4.70	36.0	4.54	34.7	4.39	32.0	4.07	29.3	3.75

Combination(%) :Indoor/outdoor capacity ratio	Outdoor air temp.		Indoor air temp. :℃WB													
			15.0		17.0		19.0		20.0		21.0		23.0		25.0	
			TC	PI	TC	PI	TC	PI	TC	PI	TC	PI	TC	PI	TC	PI
	°CDB	°CWB	kW	kW	kW	kW	kW	kW	kW	kW	kW	kW	kW	kW	kW	kW
70%	-24.9	-25.0	37.4	11.23	35.0	10.61	32.7	10.01	31.5	9.71	30.3	9.42	28.0	8.86	25.7	8.32
	-19.8	-20.0	37.4	10.65	35.0	10.05	32.7	9.48	31.5	9.19	30.3	8.91	28.0	8.36	25.7	7.83
	-14.7	-15.0	37.4	10.07	35.0	9.50	32.7	8.94	31.5	8.67	30.3	8.39	28.0	7.86	25.7	7.35
	-9.6	-10.0	37.4	9.47	35.0	8.93	32.7	8.39	31.5	8.13	30.3	7.87	28.0	7.36	25.7	6.86
	-4.4	-5.0	37.4	8.79	35.0	8.29	32.7	7.80	31.5	7.56	30.3	7.31	28.0	6.83	25.7	6.35
	-1.8	-2.5	37.4	8.34	35.0	7.86	32.7	7.40	31.5	7.16	30.3	6.94	28.0	6.48	25.7	6.03
	0.8	0.0	37.4	7.83	35.0	7.38	32.7	6.95	31.5	6.72	30.3	6.51	28.0	6.08	25.7	5.65
	2.8	2.0	37.4	7.38	35.0	6.97	32.7	6.55	31.5	6.34	30.3	6.13	28.0	5.72	25.7	5.28
	6.0	5.0	37.4	6.61	35.0	6.23	32.7	5.84	31.5	5.65	30.3	5.46	28.0	5.07	25.7	4.69
	7.0	6.0	37.4	6.32	35.0	5.96	32.7	5.59	31.5	5.42	30.3	5.23	28.0	4.87	25.7	4.50
	8.6	7.5	37.4	5.90	35.0	5.56	32.7	5.23	31.5	5.06	30.3	4.90	28.0	4.56	25.7	4.22
	11.2	10.0	37.4	5.22	35.0	4.94	32.7	4.65	31.5	4.51	30.3	4.37	28.0	4.08	25.7	3.78
	16.4	15.0	37.4	4.05	35.0	3.83	32.7	3.63	31.5	3.53	30.3	3.43	28.0	3.21	25.7	3.01

2. Capacity Raito of Outdoor Unit (High-COP mode)

U-18ME1E81 (Heatling) **Capacity Ratio 30-130%**

TC: Total capacity (kW), PI: Power input (kW)

Combination(%) :Indoor/outdoor capacity ratio	Outdoor air temp.		Indoor air temp. :℃WB													
			15.0		17.0		19.0		20.0		21.0		23.0		25.0	
			TC	PI	TC	PI	TC	PI	TC	PI	TC	PI	TC	PI	TC	PI
	°CDB	°CWB	kW	kW	kW	kW	kW	kW	kW	kW	kW	kW	kW	kW	kW	kW
60%	-24.9	-25.0	32.0	8.83	30.0	8.44	28.0	8.05	27.0	7.85	26.0	7.67	24.0	7.29	22.0	6.93
	-19.8	-20.0	32.0	8.43	30.0	8.04	28.0	7.65	27.0	7.46	26.0	7.27	24.0	6.90	22.0	6.53
	-14.7	-15.0	32.0	8.01	30.0	7.63	28.0	7.25	27.0	7.06	26.0	6.87	24.0	6.50	22.0	6.13
	-9.6	-10.0	32.0	7.53	30.0	7.18	28.0	6.83	27.0	6.65	26.0	6.47	24.0	6.10	22.0	5.72
	-4.4	-5.0	32.0	6.85	30.0	6.55	28.0	6.23	27.0	6.07	26.0	5.92	24.0	5.59	22.0	5.26
	-1.8	-2.5	32.0	6.47	30.0	6.17	28.0	5.88	27.0	5.72	26.0	5.58	24.0	5.27	22.0	4.96
	0.8	0.0	32.0	6.04	30.0	5.76	28.0	5.49	27.0	5.34	26.0	5.20	24.0	4.91	22.0	4.56
	2.8	2.0	32.0	5.66	30.0	5.41	28.0	5.14	27.0	4.99	26.0	4.85	24.0	4.54	22.0	4.22
	6.0	5.0	32.0	4.99	30.0	4.75	28.0	4.51	27.0	4.38	26.0	4.25	24.0	4.00	22.0	3.73
	7.0	6.0	32.0	4.75	30.0	4.53	28.0	4.30	27.0	4.18	26.0	4.07	24.0	3.83	22.0	3.58
	8.6	7.5	32.0	4.42	30.0	4.21	28.0	4.01	27.0	3.91	26.0	3.79	24.0	3.58	22.0	3.36
	11.2	10.0	32.0	3.88	30.0	3.71	28.0	3.54	27.0	3.46	26.0	3.37	24.0	3.18	22.0	2.99
	16.4	15.0	32.0	3.53	30.0	3.34	28.0	3.14	27.0	3.04	26.0	2.94	24.0	2.74	22.0	2.55

Combination(%) :Indoor/outdoor capacity ratio	Outdoor air temp.		Indoor air temp. :℃WB													
			15.0		17.0		19.0		20.0		21.0		23.0		25.0	
			TC	PI	TC	PI	TC	PI	TC	PI	TC	PI	TC	PI	TC	PI
	°CDB	°CWB	kW	kW	kW	kW	kW	kW	kW	kW	kW	kW	kW	kW	kW	kW
50%	-24.9	-25.0	26.7	6.95	25.0	6.70	23.4	6.45	22.5	6.32	21.6	6.20	20.0	5.95	18.3	5.70
	-19.8	-20.0	26.7	6.65	25.0	6.40	23.4	6.14	22.5	6.02	21.6	5.89	20.0	5.63	18.3	5.37
	-14.7	-15.0	26.7	6.28	25.0	6.08	23.4	5.83	22.5	5.70	21.6	5.57	20.0	5.31	18.3	5.05
	-9.6	-10.0	26.7	5.81	25.0	5.62	23.4	5.42	22.5	5.31	21.6	5.21	20.0	4.98	18.3	4.71
	-4.4	-5.0	26.7	5.24	25.0	5.07	23.4	4.90	22.5	4.79	21.6	4.70	20.0	4.50	18.3	4.27
	-1.8	-2.5	26.7	4.91	25.0	4.75	23.4	4.58	22.5	4.50	21.6	4.41	20.0	4.17	18.3	3.92
	0.8	0.0	26.7	4.54	25.0	4.40	23.4	4.21	22.5	4.11	21.6	4.01	20.0	3.78	18.3	3.56
	2.8	2.0	26.7	4.20	25.0	4.04	23.4	3.87	22.5	3.77	21.6	3.68	20.0	3.49	18.3	3.28
	6.0	5.0	26.7	3.63	25.0	3.50	23.4	3.37	22.5	3.29	21.6	3.22	20.0	3.06	18.3	2.90
	7.0	6.0	26.7	3.45	25.0	3.34	23.4	3.20	22.5	3.14	21.6	3.07	20.0	2.93	18.3	2.77
	8.6	7.5	26.7	3.18	25.0	3.08	23.4	2.98	22.5	2.92	21.6	2.86	20.0	2.73	18.3	2.59
	11.2	10.0	26.7	3.01	25.0	2.85	23.4	2.68	22.5	2.60	21.6	2.52	20.0	2.42	18.3	2.31
	16.4	15.0	26.7	3.01	25.0	2.85	23.4	2.68	22.5	2.60	21.6	2.52	20.0	2.35	18.3	2.18

Combination(%) :Indoor/outdoor capacity ratio	Outdoor air temp.		Indoor air temp. :℃WB													
			15.0		17.0		19.0		20.0		21.0		23.0		25.0	
			TC	PI	TC	PI	TC	PI	TC	PI	TC	PI	TC	PI	TC	PI
	°CDB	°CWB	kW	kW	kW	kW	kW	kW	kW	kW	kW	kW	kW	kW	kW	kW
40%	-24.9	-25.0	21.3	5.40	20.0	5.24	18.7	5.09	18.0	5.01	17.3	4.93	16.0	4.76	14.7	4.59
	-19.8	-20.0	21.3	5.13	20.0	5.01	18.7	4.85	18.0	4.76	17.3	4.67	16.0	4.50	14.7	4.32
	-14.7	-15.0	21.3	4.79	20.0	4.69	18.7	4.58	18.0	4.51	17.3	4.43	16.0	4.24	14.7	4.06
	-9.6	-10.0	21.3	4.41	20.0	4.31	18.7	4.21	18.0	4.15	17.3	4.09	16.0	3.95	14.7	3.78
	-4.4	-5.0	21.3	3.92	20.0	3.85	18.7	3.75	18.0	3.68	17.3	3.59	16.0	3.42	14.7	3.23
	-1.8	-2.5	21.3	3.63	20.0	3.53	18.7	3.40	18.0	3.34	17.3	3.26	16.0	3.11	14.7	2.96
	0.8	0.0	21.3	3.24	20.0	3.16	18.7	3.06	18.0	3.00	17.3	2.95	16.0	2.82	14.7	2.68
	2.8	2.0	21.3	2.95	20.0	2.88	18.7	2.79	18.0	2.74	17.3	2.70	16.0	2.59	14.7	2.48
	6.0	5.0	21.3	2.52	20.0	2.48	18.7	2.42	18.0	2.39	17.3	2.35	16.0	2.26	14.7	2.18
	7.0	6.0	21.3	2.48	20.0	2.35	18.7	2.30	18.0	2.26	17.3	2.23	16.0	2.16	14.7	2.08
	8.6	7.5	21.3	2.48	20.0	2.35	18.7	2.22	18.0	2.15	17.3	2.09	16.0	2.02	14.7	1.95
	11.2	10.0	21.3	2.48	20.0	2.35	18.7	2.22	18.0	2.15	17.3	2.09	16.0	1.96	14.7	1.83
	16.4	15.0	21.3	2.48	20.0	2.35	18.7	2.22	18.0	2.15	17.3	2.09	16.0	1.96	14.7	1.83

Combination(%) :Indoor/outdoor capacity ratio	Outdoor air temp.		Indoor air temp. :℃WB													
			15.0		17.0		19.0		20.0		21.0		23.0		25.0	
			TC	PI	TC	PI	TC	PI	TC	PI	TC	PI	TC	PI	TC	PI
	°CDB	°CWB	kW	kW	kW	kW	kW	kW	kW	kW	kW	kW	kW	kW	kW	kW
30%	-24.9	-25.0	16.0	4.06	15.0	3.97	14.0	3.88	13.5	3.83	13.0	3.77	12.0	3.67	11.0	3.56
	-19.8	-20.0	16.0	3.83	15.0	3.77	14.0	3.68	13.5	3.63	13.0	3.57	12.0	3.46	11.0	3.34
	-14.7	-15.0	16.0	3.56	15.0	3.51	14.0	3.46	13.5	3.42	13.0	3.38	12.0	3.25	11.0	3.12
	-9.6	-10.0	16.0	3.23	15.0	3.20	14.0	3.13	13.5	3.07	13.0	3.02	12.0	2.89	11.0	2.75
	-4.4	-5.0	16.0	2.72	15.0	2.66	14.0	2.60	13.5	2.56	13.0	2.52	12.0	2.43	11.0	2.33
	-1.8	-2.5	16.0	2.44	15.0	2.40	14.0	2.35	13.5	2.32	13.0	2.28	12.0	2.21	11.0	2.12
	0.8	0.0	16.0	2.16	15.0	2.14	14.0	2.10	13.5	2.08	13.0	2.06	12.0	2.00	11.0	1.93
	2.8	2.0	16.0	1.96	15.0	1.94	14.0	1.92	13.5	1.91	13.0	1.89	12.0	1.84	11.0	1.79
	6.0	5.0	16.0	1.96	15.0	1.86	14.0	1.76	13.5	1.71	13.0	1.66	12.0	1.61	11.0	1.57
	7.0	6.0	16.0	1.96	15.0	1.86	14.0	1.76	13.5	1.71	13.0	1.66	12.0	1.56	11.0	1.50
	8.6	7.5	16.0	1.96	15.0	1.86	14.0	1.76	13.5	1.71	13.0	1.66	12.0	1.56	11.0	1.47
	11.2	10.0	16.0	1.96	15.0	1.86	14.0	1.76	13.5	1.71	13.0	1.66	12.0	1.56	11.0	1.47
	16.4	15.0	16.0	1.96	15.0	1.86	14.0	1.76	13.5	1.71	13.0	1.66	12.0	1.56	11.0	1.47

2. Capacity Raito of Outdoor Unit (High-COP mode)

2-7. U-20ME1E81 (Cooling)

Capacity Ratio 30-130%

TC: Total capacity (kW), PI: Power input (kW)

Combination(%) :Indoor/outdoor capacity ratio	Outdoor air temp. °C DB	Indoor air temp. :°CWB													
		16.0		17.0		18.0		19.0		20.0		21.0		22.0	
		TC	PI	TC	PI	TC	PI	TC	PI	TC	PI	TC	PI	TC	PI
		kW	kW	kW	kW	kW	kW	kW	kW	kW	kW	kW	kW	kW	kW
130% or more	-10.0	48.4	5.36	48.4	5.36	48.4	5.36	48.4	5.36	51.6	5.72	54.8	6.08	58.1	6.44
	-5.0	48.4	5.37	48.4	5.37	48.4	5.37	48.4	5.37	51.6	5.73	54.8	6.09	58.1	6.46
	0.0	48.4	5.39	48.4	5.39	48.4	5.39	48.4	5.39	51.6	5.75	54.8	6.12	58.1	6.50
	5.0	48.4	5.44	48.4	5.44	48.4	5.44	48.4	5.44	51.6	5.81	54.8	6.19	58.1	6.57
	10.0	48.4	5.54	48.4	5.54	48.4	5.54	48.4	5.54	51.6	5.94	54.8	6.35	58.1	6.75
	15.0	48.4	5.85	48.4	5.85	48.4	5.85	48.4	5.85	51.6	6.31	54.8	6.80	58.1	7.40
	20.0	48.4	7.09	48.4	7.09	48.4	7.09	48.4	7.09	51.6	7.82	54.8	8.58	58.1	9.40
	25.0	48.4	8.82	48.4	8.82	48.4	8.82	48.4	8.82	51.6	9.70	54.8	10.61	58.1	11.60
	30.0	48.4	10.72	48.4	10.72	48.4	10.72	48.4	10.72	51.6	11.76	54.8	12.85	58.1	14.01
	35.0	48.4	12.78	48.4	12.78	48.4	12.78	48.4	12.78	51.6	14.00	54.5	15.08	55.6	15.08
	40.0	48.4	15.01	48.4	15.01	48.4	15.01	48.4	15.01	49.5	15.08	50.5	15.08	51.6	15.08
	43.0	46.3	15.08	46.3	15.08	46.3	15.08	46.3	15.08	47.3	15.08	48.3	15.08	49.3	15.08

Combination(%) :Indoor/outdoor capacity ratio	Outdoor air temp. °C DB	Indoor air temp. :°CWB													
		16.0		17.0		18.0		19.0		20.0		21.0		22.0	
		TC	PI	TC	PI	TC	PI	TC	PI	TC	PI	TC	PI	TC	PI
		kW	kW	kW	kW	kW	kW	kW	kW	kW	kW	kW	kW	kW	kW
120%	-10.0	45.4	5.01	47.3	5.23	47.3	5.23	47.3	5.23	50.4	5.58	53.6	5.94	56.7	6.29
	-5.0	45.4	5.02	47.3	5.24	47.3	5.24	47.3	5.24	50.4	5.60	53.6	5.95	56.7	6.31
	0.0	45.4	5.03	47.3	5.27	47.3	5.27	47.3	5.27	50.4	5.63	53.6	5.99	56.7	6.35
	5.0	45.4	5.06	47.3	5.30	47.3	5.30	47.3	5.30	50.4	5.67	53.6	6.04	56.7	6.41
	10.0	45.4	5.10	47.3	5.41	47.3	5.41	47.3	5.41	50.4	5.79	53.6	6.18	56.7	6.58
	15.0	45.4	5.24	47.3	5.70	47.3	5.70	47.3	5.70	50.4	6.14	53.6	6.61	56.7	7.12
	20.0	45.4	5.86	47.3	6.86	47.3	6.86	47.3	6.86	50.4	7.55	53.6	8.28	56.7	9.07
	25.0	45.4	7.38	47.3	8.54	47.3	8.54	47.3	8.54	50.4	9.37	53.6	10.25	56.7	11.19
	30.0	45.4	9.04	47.3	10.37	47.3	10.37	47.3	10.37	50.4	11.38	53.6	12.42	56.7	13.54
	35.0	45.4	10.86	47.3	12.38	47.3	12.38	47.3	12.38	50.4	13.55	53.6	14.78	55.1	15.08
	40.0	45.4	12.83	47.3	14.55	47.3	14.55	47.3	14.55	49.1	15.08	50.1	15.08	51.1	15.08
	43.0	45.4	14.09	45.9	15.08	45.9	15.08	45.9	15.08	46.9	15.08	47.9	15.08	48.9	15.08

Combination(%) :Indoor/outdoor capacity ratio	Outdoor air temp. °C DB	Indoor air temp. :°CWB													
		16.0		17.0		18.0		19.0		20.0		21.0		22.0	
		TC	PI	TC	PI	TC	PI	TC	PI	TC	PI	TC	PI	TC	PI
		kW	kW	kW	kW	kW	kW	kW	kW	kW	kW	kW	kW	kW	kW
110%	-10.0	40.6	4.49	44.0	4.86	46.1	5.10	46.1	5.10	49.2	5.45	52.3	5.79	55.4	6.14
	-5.0	40.6	4.49	44.0	4.87	46.1	5.12	46.1	5.12	49.2	5.46	52.3	5.81	55.4	6.16
	0.0	40.6	4.50	44.0	4.88	46.1	5.14	46.1	5.14	49.2	5.49	52.3	5.83	55.4	6.18
	5.0	40.6	4.52	44.0	4.91	46.1	5.17	46.1	5.17	49.2	5.53	52.3	5.89	55.4	6.25
	10.0	40.6	4.57	44.0	4.96	46.1	5.27	46.1	5.27	49.2	5.65	52.3	6.02	55.4	6.41
	15.0	40.6	4.71	44.0	5.14	46.1	5.53	46.1	5.53	49.2	5.97	52.3	6.43	55.4	6.89
	20.0	40.6	5.29	44.0	5.87	46.1	6.62	46.1	6.62	49.2	7.30	52.3	7.99	55.4	8.73
	25.0	40.6	6.62	44.0	7.37	46.1	8.26	46.1	8.26	49.2	9.06	52.3	9.91	55.4	10.80
	30.0	40.6	8.10	44.0	9.00	46.1	10.03	46.1	10.03	49.2	11.00	52.3	12.01	55.4	13.07
	35.0	40.6	9.72	44.0	10.80	46.1	11.98	46.1	11.98	49.2	13.11	52.3	14.29	54.6	15.08
	40.0	40.6	11.48	44.0	12.73	46.1	14.09	46.1	14.09	48.7	15.08	49.7	15.08	50.7	15.08
	43.0	40.6	12.61	44.0	13.97	45.6	15.08	45.6	15.08	46.5	15.08	47.5	15.08	48.5	15.08

2. Capacity Raito of Outdoor Unit (High-COP mode)

U-20ME1E81 (Cooling)

Capacity Ratio 30-130%

TC: Total capacity (kW), PI: Power input (kW)

Combination(%) :Indoor/outdoor capacity ratio	Outdoor air temp. °C DB	Indoor air temp. :°CWB													
		16.0		17.0		18.0		19.0		20.0		21.0		22.0	
		TC	PI	TC	PI	TC	PI	TC	PI	TC	PI	TC	PI	TC	PI
		kW	kW	kW	kW	kW	kW	kW	kW	kW	kW	kW	kW	kW	kW
100%	-10.0	36.0	3.98	39.0	4.32	42.0	4.65	45.0	4.98	48.0	5.31	51.0	5.65	54.0	5.99
	-5.0	36.0	3.99	39.0	4.33	42.0	4.66	45.0	4.99	48.0	5.32	51.0	5.66	54.0	6.00
	0.0	36.0	4.00	39.0	4.34	42.0	4.67	45.0	5.01	48.0	5.35	51.0	5.70	54.0	6.03
	5.0	36.0	4.01	39.0	4.36	42.0	4.70	45.0	5.05	48.0	5.39	51.0	5.74	54.0	6.09
	10.0	36.0	4.06	39.0	4.41	42.0	4.77	45.0	5.13	48.0	5.50	51.0	5.87	54.0	6.24
	15.0	36.0	4.19	39.0	4.57	42.0	4.98	45.0	5.38	48.0	5.80	51.0	6.24	54.0	6.68
	20.0	36.0	4.73	39.0	5.24	42.0	5.80	45.0	6.40	48.0	7.04	51.0	7.71	54.0	8.42
	25.0	36.0	5.90	39.0	6.57	42.0	7.25	45.0	7.98	48.0	8.75	51.0	9.56	54.0	10.42
	30.0	36.0	7.22	39.0	8.00	42.0	8.83	45.0	9.71	48.0	10.63	51.0	11.60	54.0	12.62
	35.0	36.0	8.65	39.0	9.58	42.0	10.57	45.0	11.60	48.0	12.68	51.0	13.82	54.0	15.00
	40.0	36.0	10.20	39.0	11.29	42.0	12.44	45.0	13.64	48.0	14.89	49.3	15.08	50.3	15.08
	43.0	36.0	11.19	39.0	12.39	42.0	13.64	45.0	14.94	46.1	15.08	47.1	15.08	48.1	15.08

Combination(%) :Indoor/outdoor capacity ratio	Outdoor air temp. °C DB	Indoor air temp. :°CWB													
		16.0		17.0		18.0		19.0		20.0		21.0		22.0	
		TC	PI	TC	PI	TC	PI	TC	PI	TC	PI	TC	PI	TC	PI
		kW	kW	kW	kW	kW	kW	kW	kW	kW	kW	kW	kW	kW	kW
90%	-10.0	32.4	3.58	35.1	3.89	37.8	4.19	40.5	4.48	43.2	4.78	45.9	5.08	48.6	5.38
	-5.0	32.4	3.58	35.1	3.89	37.8	4.19	40.5	4.49	43.2	4.79	45.9	5.09	48.6	5.39
	0.0	32.4	3.60	35.1	3.90	37.8	4.20	40.5	4.50	43.2	4.80	45.9	5.12	48.6	5.42
	5.0	32.4	3.61	35.1	3.92	37.8	4.22	40.5	4.54	43.2	4.84	45.9	5.15	48.6	5.46
	10.0	32.4	3.64	35.1	3.96	37.8	4.27	40.5	4.59	43.2	4.92	45.9	5.24	48.6	5.58
	15.0	32.4	3.74	35.1	4.07	37.8	4.42	40.5	4.78	43.2	5.14	45.9	5.52	48.6	5.90
	20.0	32.4	4.14	35.1	4.59	37.8	5.06	40.5	5.54	43.2	6.08	45.9	6.64	48.6	7.22
	25.0	32.4	5.20	35.1	5.74	37.8	6.32	40.5	6.94	43.2	7.57	45.9	8.25	48.6	8.97
	30.0	32.4	6.35	35.1	7.02	37.8	7.71	40.5	8.44	43.2	9.22	45.9	10.03	48.6	10.88
	35.0	32.4	7.61	35.1	8.41	37.8	9.25	40.5	10.12	43.2	11.02	45.9	11.98	48.6	12.97
	40.0	32.4	8.99	35.1	9.92	37.8	10.89	40.5	11.90	43.2	12.97	45.9	14.07	48.3	15.06
	43.0	32.4	9.86	35.1	10.88	37.8	11.95	40.5	13.06	43.2	14.22	45.4	15.08	46.3	15.08

Combination(%) :Indoor/outdoor capacity ratio	Outdoor air temp. °C DB	Indoor air temp. :°CWB													
		16.0		17.0		18.0		19.0		20.0		21.0		22.0	
		TC	PI	TC	PI	TC	PI	TC	PI	TC	PI	TC	PI	TC	PI
		kW	kW	kW	kW	kW	kW	kW	kW	kW	kW	kW	kW	kW	kW
80%	-10.0	28.8	3.19	31.2	3.46	33.6	3.71	36.0	3.98	38.4	4.25	40.8	4.51	43.2	4.78
	-5.0	28.8	3.19	31.2	3.46	33.6	3.72	36.0	3.99	38.4	4.26	40.8	4.52	43.2	4.79
	0.0	28.8	3.19	31.2	3.46	33.6	3.74	36.0	4.00	38.4	4.27	40.8	4.54	43.2	4.81
	5.0	28.8	3.20	31.2	3.48	33.6	3.75	36.0	4.01	38.4	4.29	40.8	4.57	43.2	4.84
	10.0	28.8	3.22	31.2	3.50	33.6	3.78	36.0	4.06	38.4	4.35	40.8	4.63	43.2	4.92
	15.0	28.8	3.29	31.2	3.58	33.6	3.89	36.0	4.20	38.4	4.51	40.8	4.83	43.2	5.15
	20.0	28.8	3.58	31.2	3.97	33.6	4.36	36.0	4.79	38.4	5.20	40.8	5.65	43.2	6.11
	25.0	28.8	4.54	31.2	4.99	33.6	5.46	36.0	5.96	38.4	6.50	40.8	7.04	43.2	7.62
	30.0	28.8	5.53	31.2	6.09	33.6	6.67	36.0	7.28	38.4	7.92	40.8	8.58	43.2	9.28
	35.0	28.8	6.64	31.2	7.31	33.6	7.99	36.0	8.72	38.4	9.48	40.8	10.27	43.2	11.09
	40.0	28.8	7.84	31.2	8.62	33.6	9.43	36.0	10.28	38.4	11.17	40.8	12.09	43.2	13.04
	43.0	28.8	8.60	31.2	9.45	33.6	10.35	36.0	11.28	38.4	12.25	40.8	13.25	43.2	14.29

Combination(%) :Indoor/outdoor capacity ratio	Outdoor air temp. °C DB	Indoor air temp. :°CWB													
		16.0		17.0		18.0		19.0		20.0		21.0		22.0	
		TC	PI	TC	PI	TC	PI	TC	PI	TC	PI	TC	PI	TC	PI
		kW	kW	kW	kW	kW	kW	kW	kW	kW	kW	kW	kW	kW	kW
70%	-10.0	25.2	2.78	27.3	3.02	29.4	3.25	31.5	3.48	33.6	3.71	35.7	3.96	37.8	4.19
	-5.0	25.2	2.78	27.3	3.03	29.4	3.26	31.5	3.49	33.6	3.72	35.7	3.96	37.8	4.19
	0.0	25.2	2.80	27.3	3.03	29.4	3.26	31.5	3.49	33.6	3.74	35.7	3.97	37.8	4.20
	5.0	25.2	2.80	27.3	3.04	29.4	3.27	31.5	3.51	33.6	3.75	35.7	3.99	37.8	4.22
	10.0	25.2	2.82	27.3	3.05	29.4	3.29	31.5	3.54	33.6	3.78	35.7	4.03	37.8	4.28
	15.0	25.2	2.87	27.3	3.12	29.4	3.38	31.5	3.63	33.6	3.90	35.7	4.16	37.8	4.44
	20.0	25.2	3.06	27.3	3.38	29.4	3.70	31.5	4.04	33.6	4.40	35.7	4.76	37.8	5.13
	25.0	25.2	3.92	27.3	4.28	29.4	4.67	31.5	5.08	33.6	5.50	35.7	5.94	37.8	6.40
	30.0	25.2	4.78	27.3	5.23	29.4	5.71	31.5	6.19	33.6	6.72	35.7	7.25	37.8	7.81
	35.0	25.2	5.72	27.3	6.26	29.4	6.83	31.5	7.42	33.6	8.04	35.7	8.69	37.8	9.35
	40.0	25.2	6.75	27.3	7.40	29.4	8.07	31.5	8.77	33.6	9.49	35.7	10.23	37.8	11.01
	43.0	25.2	7.40	27.3	8.12	29.4	8.85	31.5	9.62	33.6	10.41	35.7	11.23	37.8	12.08

2. Capacity Raito of Outdoor Unit (High-COP mode)

U-20ME1E81 (Cooling)

Capacity Ratio 30-130%

TC: Total capacity (kW), PI: Power input (kW)

Combination(%) :Indoor/outdoor capacity ratio	Outdoor air temp. °C DB	Indoor air temp. :°CWB													
		16.0		17.0		18.0		19.0		20.0		21.0		22.0	
		TC	PI	TC	PI	TC	PI	TC	PI	TC	PI	TC	PI	TC	PI
		kW	kW	kW	kW	kW	kW	kW	kW	kW	kW	kW	kW	kW	kW
60%	-10.0	21.6	2.39	23.4	2.59	25.2	2.78	27.0	2.98	28.8	3.19	30.6	3.39	32.4	3.58
	-5.0	21.6	2.39	23.4	2.59	25.2	2.78	27.0	2.99	28.8	3.19	30.6	3.39	32.4	3.58
	0.0	21.6	2.39	23.4	2.60	25.2	2.80	27.0	2.99	28.8	3.19	30.6	3.40	32.4	3.60
	5.0	21.6	2.40	23.4	2.60	25.2	2.80	27.0	3.00	28.8	3.20	30.6	3.41	32.4	3.61
	10.0	21.6	2.41	23.4	2.61	25.2	2.82	27.0	3.03	28.8	3.22	30.6	3.43	32.4	3.64
	15.0	21.6	2.44	23.4	2.66	25.2	2.87	27.0	3.09	28.8	3.31	30.6	3.53	32.4	3.75
	20.0	21.6	2.56	23.4	2.82	25.2	3.07	27.0	3.34	28.8	3.63	30.6	3.92	32.4	4.23
	25.0	21.6	3.34	23.4	3.64	25.2	3.94	27.0	4.26	28.8	4.59	30.6	4.94	32.4	5.30
	30.0	21.6	4.07	23.4	4.43	25.2	4.80	27.0	5.20	28.8	5.60	30.6	6.03	32.4	6.46
	35.0	21.6	4.86	23.4	5.30	25.2	5.75	27.0	6.23	28.8	6.72	30.6	7.23	32.4	7.75
	40.0	21.6	5.73	23.4	6.25	25.2	6.79	27.0	7.34	28.8	7.92	30.6	8.51	32.4	9.13
	43.0	21.6	6.28	23.4	6.86	25.2	7.45	27.0	8.06	28.8	8.69	30.6	9.35	32.4	10.02

Combination(%) :Indoor/outdoor capacity ratio	Outdoor air temp. °C DB	Indoor air temp. :°CWB													
		16.0		17.0		18.0		19.0		20.0		21.0		22.0	
		TC	PI	TC	PI	TC	PI	TC	PI	TC	PI	TC	PI	TC	PI
		kW	kW	kW	kW	kW	kW	kW	kW	kW	kW	kW	kW	kW	kW
50%	-10.0	18.0	2.00	19.5	2.16	21.0	2.32	22.5	2.48	24.0	2.66	25.5	2.82	27.0	2.98
	-5.0	18.0	2.00	19.5	2.16	21.0	2.32	22.5	2.49	24.0	2.66	25.5	2.82	27.0	2.99
	0.0	18.0	2.00	19.5	2.16	21.0	2.33	22.5	2.49	24.0	2.66	25.5	2.83	27.0	2.99
	5.0	18.0	2.00	19.5	2.17	21.0	2.33	22.5	2.49	24.0	2.67	25.5	2.83	27.0	3.00
	10.0	18.0	2.01	19.5	2.17	21.0	2.34	22.5	2.52	24.0	2.68	25.5	2.85	27.0	3.03
	15.0	18.0	2.02	19.5	2.19	21.0	2.37	22.5	2.55	24.0	2.73	25.5	2.90	27.0	3.09
	20.0	18.0	2.10	19.5	2.30	21.0	2.49	22.5	2.70	24.0	2.92	25.5	3.14	27.0	3.38
	25.0	18.0	2.82	19.5	3.04	21.0	3.27	22.5	3.51	24.0	3.77	25.5	4.04	27.0	4.30
	30.0	18.0	3.41	19.5	3.69	21.0	3.98	22.5	4.28	24.0	4.59	25.5	4.92	27.0	5.24
	35.0	18.0	4.06	19.5	4.40	21.0	4.74	22.5	5.12	24.0	5.49	25.5	5.88	27.0	6.28
	40.0	18.0	4.77	19.5	5.17	21.0	5.59	22.5	6.03	24.0	6.47	25.5	6.94	27.0	7.41
	43.0	18.0	5.22	19.5	5.67	21.0	6.12	22.5	6.61	24.0	7.10	25.5	7.60	27.0	8.12

Combination(%) :Indoor/outdoor capacity ratio	Outdoor air temp. °C DB	Indoor air temp. :°CWB													
		16.0		17.0		18.0		19.0		20.0		21.0		22.0	
		TC	PI	TC	PI	TC	PI	TC	PI	TC	PI	TC	PI	TC	PI
		kW	kW	kW	kW	kW	kW	kW	kW	kW	kW	kW	kW	kW	kW
40%	-10.0	14.4	1.59	15.6	1.73	16.8	1.86	18.0	2.00	19.2	2.12	20.4	2.25	21.6	2.39
	-5.0	14.4	1.59	15.6	1.73	16.8	1.86	18.0	2.00	19.2	2.12	20.4	2.26	21.6	2.39
	0.0	14.4	1.59	15.6	1.73	16.8	1.86	18.0	2.00	19.2	2.12	20.4	2.26	21.6	2.39
	5.0	14.4	1.60	15.6	1.73	16.8	1.87	18.0	2.00	19.2	2.13	20.4	2.26	21.6	2.40
	10.0	14.4	1.60	15.6	1.74	16.8	1.87	18.0	2.01	19.2	2.13	20.4	2.27	21.6	2.41
	15.0	14.4	1.61	15.6	1.75	16.8	1.89	18.0	2.03	19.2	2.16	20.4	2.31	21.6	2.45
	20.0	14.4	1.66	15.6	1.80	16.8	1.95	18.0	2.11	19.2	2.26	20.4	2.42	21.6	2.60
	25.0	14.4	2.11	15.6	2.41	16.8	2.67	18.0	2.84	19.2	3.03	20.4	3.21	21.6	3.41
	30.0	14.4	2.80	15.6	3.00	16.8	3.22	18.0	3.45	19.2	3.67	20.4	3.90	21.6	4.14
	35.0	14.4	3.31	15.6	3.56	16.8	3.82	18.0	4.09	19.2	4.36	20.4	4.65	21.6	4.94
	40.0	14.4	3.86	15.6	4.16	16.8	4.48	18.0	4.80	19.2	5.14	20.4	5.48	21.6	5.82
	43.0	14.4	4.22	15.6	4.56	16.8	4.91	18.0	5.25	19.2	5.63	20.4	6.00	21.6	6.38

Combination(%) :Indoor/outdoor capacity ratio	Outdoor air temp. °C DB	Indoor air temp. :°CWB													
		16.0		17.0		18.0		19.0		20.0		21.0		22.0	
		TC	PI	TC	PI	TC	PI	TC	PI	TC	PI	TC	PI	TC	PI
		kW	kW	kW	kW	kW	kW	kW	kW	kW	kW	kW	kW	kW	kW
30%	-10.0	10.8	1.19	11.7	1.29	12.6	1.39	13.5	1.50	14.4	1.59	15.3	1.69	16.2	1.79
	-5.0	10.8	1.19	11.7	1.30	12.6	1.39	13.5	1.50	14.4	1.59	15.3	1.69	16.2	1.79
	0.0	10.8	1.19	11.7	1.30	12.6	1.39	13.5	1.50	14.4	1.59	15.3	1.69	16.2	1.80
	5.0	10.8	1.19	11.7	1.30	12.6	1.39	13.5	1.50	14.4	1.60	15.3	1.69	16.2	1.80
	10.0	10.8	1.19	11.7	1.30	12.6	1.40	13.5	1.50	14.4	1.60	15.3	1.71	16.2	1.80
	15.0	10.8	1.21	11.7	1.31	12.6	1.40	13.5	1.51	14.4	1.61	15.3	1.72	16.2	1.82
	20.0	10.8	1.23	11.7	1.33	12.6	1.44	13.5	1.54	14.4	1.66	15.3	1.77	16.2	1.89
	25.0	10.8	1.43	11.7	1.60	12.6	1.80	13.5	2.01	14.4	2.24	15.3	2.51	16.2	2.62
	30.0	10.8	2.24	11.7	2.38	12.6	2.53	13.5	2.68	14.4	2.83	15.3	2.99	16.2	3.16
	35.0	10.8	2.61	11.7	2.78	12.6	2.97	13.5	3.16	14.4	3.34	15.3	3.54	16.2	3.74
	40.0	10.8	3.02	11.7	3.22	12.6	3.45	13.5	3.68	14.4	3.90	15.3	4.13	16.2	4.37
	43.0	10.8	3.28	11.7	3.51	12.6	3.76	13.5	4.00	14.4	4.26	15.3	4.51	16.2	4.78

2. Capacity Raito of Outdoor Unit (High-COP mode)

2-8. U-20ME1E81 (Heatling)

Capacity Ratio 30-130%

TC: Total capacity (kW), PI: Power input (kW)

Combination(%) :Indoor/outdoor capacity ratio	Outdoor air temp.		Indoor air temp. :℃WB													
			15.0		17.0		19.0		20.0		21.0		23.0		25.0	
			TC	PI	TC	PI	TC	PI	TC	PI	TC	PI	TC	PI	TC	PI
	°CDB	°CWB	kW	kW	kW	kW	kW	kW	kW	kW	kW	kW	kW	kW	kW	kW
130% or more	-24.9	-25.0	35.8	11.84	33.9	11.12	31.9	10.39	30.9	10.02	30.9	10.02	30.9	10.02	30.9	10.02
	-19.8	-20.0	37.7	12.05	35.7	11.31	33.7	10.56	32.7	10.19	32.7	10.19	32.7	10.19	32.7	10.19
	-14.7	-15.0	40.0	12.32	37.9	11.57	35.8	10.82	34.7	10.44	34.7	10.44	34.7	10.44	34.7	10.44
	-9.6	-10.0	42.9	12.71	40.7	11.94	38.5	11.17	37.4	10.80	37.4	10.80	37.4	10.80	37.4	10.80
	-4.4	-5.0	46.7	13.26	44.5	12.46	42.1	11.67	40.9	11.27	40.9	11.27	40.9	11.27	40.9	11.27
	-1.8	-2.5	49.2	13.60	46.8	12.79	44.4	11.97	43.1	11.57	43.1	11.57	43.1	11.57	43.1	11.57
	0.8	0.0	52.0	13.99	49.6	13.17	47.0	12.33	45.7	11.92	45.7	11.92	45.7	11.92	45.7	11.92
	2.8	2.0	54.7	14.36	52.2	13.53	49.6	12.71	48.3	12.29	48.3	12.29	48.3	12.29	48.3	12.29
	6.0	5.0	59.3	14.82	57.5	14.41	54.9	13.63	53.6	13.25	53.6	13.25	53.6	13.25	53.6	13.25
	7.0	6.0	60.7	14.82	59.7	14.82	55.8	13.52	53.8	12.89	53.8	12.89	53.8	12.89	53.8	12.89
	8.6	7.5	62.6	14.82	59.7	14.09	55.8	12.89	53.8	12.31	53.8	12.31	53.8	12.31	53.8	12.31
	11.2	10.0	63.7	14.11	59.7	12.90	55.8	11.75	53.8	11.19	53.8	11.19	53.8	11.19	53.8	11.19
	16.4	15.0	63.7	11.50	59.7	10.53	55.8	9.60	53.8	9.14	53.8	9.14	53.8	9.14	53.8	9.14

Combination(%) :Indoor/outdoor capacity ratio	Outdoor air temp.		Indoor air temp. :℃WB													
			15.0		17.0		19.0		20.0		21.0		23.0		25.0	
			TC	PI	TC	PI	TC	PI	TC	PI	TC	PI	TC	PI	TC	PI
	°CDB	°CWB	kW	kW	kW	kW	kW	kW	kW	kW	kW	kW	kW	kW	kW	kW
120%	-24.9	-25.0	35.9	11.72	33.9	11.00	32.0	10.28	31.0	9.93	31.0	9.93	31.0	9.93	31.0	9.93
	-19.8	-20.0	37.8	11.92	35.8	11.19	33.7	10.47	32.7	10.11	32.7	10.11	32.7	10.11	32.7	10.11
	-14.7	-15.0	40.1	12.20	38.0	11.47	35.9	10.73	34.8	10.36	34.8	10.36	34.8	10.36	34.8	10.36
	-9.6	-10.0	43.0	12.60	40.8	11.84	38.6	11.09	37.4	10.70	37.4	10.70	37.4	10.70	37.4	10.70
	-4.4	-5.0	46.8	13.14	44.5	12.36	42.1	11.57	40.9	11.18	40.9	11.18	40.9	11.18	40.9	11.18
	-1.8	-2.5	49.2	13.49	46.8	12.68	44.4	11.88	43.1	11.48	43.1	11.48	43.1	11.48	43.1	11.48
	0.8	0.0	52.1	13.86	49.6	13.05	47.0	12.23	45.7	11.82	45.7	11.82	45.7	11.82	45.7	11.82
	2.8	2.0	54.8	14.24	52.2	13.43	49.6	12.61	48.2	12.20	48.2	12.20	48.2	12.20	48.2	12.20
	6.0	5.0	59.5	14.82	57.5	14.33	54.5	13.37	52.5	12.76	52.5	12.76	52.5	12.76	51.4	11.83
	7.0	6.0	60.9	14.82	58.4	14.17	54.5	12.96	52.5	12.38	52.5	12.38	52.5	12.38	51.4	11.45
	8.6	7.5	62.2	14.68	58.4	13.51	54.5	12.37	52.5	11.80	52.5	11.80	52.5	11.80	51.4	10.82
	11.2	10.0	62.2	13.44	58.4	12.30	54.5	11.22	52.5	10.70	52.5	10.70	52.5	10.70	51.4	9.82
	16.4	15.0	62.2	10.93	58.4	10.02	54.5	9.14	52.5	8.72	52.5	8.72	52.5	8.72	51.4	8.01

Combination(%) :Indoor/outdoor capacity ratio	Outdoor air temp.		Indoor air temp. :℃WB													
			15.0		17.0		19.0		20.0		21.0		23.0		25.0	
			TC	PI	TC	PI	TC	PI	TC	PI	TC	PI	TC	PI	TC	PI
	°CDB	°CWB	kW	kW	kW	kW	kW	kW	kW	kW	kW	kW	kW	kW	kW	kW
110%	-24.9	-25.0	35.9	11.59	34.0	10.90	32.0	10.19	31.0	9.84	31.0	9.84	30.8	9.66	28.5	8.93
	-19.8	-20.0	37.8	11.80	35.8	11.09	33.8	10.39	32.7	10.03	32.7	10.03	32.5	9.84	30.1	9.09
	-14.7	-15.0	40.1	12.10	38.0	11.37	35.9	10.65	34.8	10.28	34.8	10.28	34.6	10.09	32.1	9.31
	-9.6	-10.0	43.0	12.48	40.9	11.74	38.6	11.00	37.5	10.62	37.5	10.62	37.3	10.43	34.7	9.62
	-4.4	-5.0	46.9	13.04	44.6	12.27	42.2	11.48	40.9	11.10	40.9	11.10	40.9	10.89	38.0	10.04
	-1.8	-2.5	49.3	13.37	46.9	12.57	44.4	11.79	43.1	11.39	43.1	11.39	43.1	11.17	40.1	10.31
	0.8	0.0	52.1	13.75	49.6	12.95	47.0	12.14	45.7	11.74	45.7	11.74	45.7	11.74	42.7	10.66
	2.8	2.0	54.8	14.12	52.2	13.33	49.6	12.52	48.2	12.12	48.2	12.12	48.2	12.12	45.3	11.08
	6.0	5.0	59.8	14.82	57.0	14.00	53.2	12.80	51.3	12.23	51.3	12.23	50.1	11.62	46.0	10.47
	7.0	6.0	60.8	14.75	57.0	13.55	53.2	12.43	51.3	11.88	51.3	11.88	50.1	11.25	46.0	10.10
	8.6	7.5	60.8	14.04	57.0	12.93	53.2	11.82	51.3	11.27	51.3	11.27	50.1	10.64	46.0	9.54
	11.2	10.0	60.8	12.78	57.0	11.72	53.2	10.70	51.3	10.21	51.3	10.21	50.1	9.64	46.0	8.66
	16.4	15.0	60.8	10.36	57.0	9.52	53.2	8.70	51.3	8.31	51.3	8.31	50.1	7.84	46.0	7.07

2. Capacity Raito of Outdoor Unit (High-COP mode)

U-20ME1E81 (Heatling) **Capacity Ratio 30-130%**

TC: Total capacity (kW), PI: Power input (kW)

Combination(%) :Indoor/outdoor capacity ratio	Outdoor air temp.		Indoor air temp. :℃WB													
			15.0		17.0		19.0		20.0		21.0		23.0		25.0	
			TC	PI	TC	PI	TC	PI	TC	PI	TC	PI	TC	PI	TC	PI
	°CDB	°CWB	kW	kW	kW	kW	kW	kW	kW	kW	kW	kW	kW	kW	kW	kW
100%	-24.9	-25.0	36.0	11.48	34.1	10.78	32.1	10.10	31.1	9.76	30.0	9.43	28.0	8.77	25.9	8.12
	-19.8	-20.0	37.9	11.70	35.9	10.99	33.8	10.31	32.8	9.95	31.7	9.61	29.6	8.93	27.4	8.27
	-14.7	-15.0	40.2	11.98	38.1	11.27	36.0	10.57	34.9	10.21	33.8	9.86	31.5	9.15	29.2	8.47
	-9.6	-10.0	43.1	12.38	40.9	11.65	38.7	10.92	37.5	10.56	36.3	10.19	34.0	9.46	31.5	8.74
	-4.4	-5.0	47.0	12.93	44.6	12.16	42.2	11.40	41.0	11.01	39.7	10.64	37.2	9.87	34.5	9.12
	-1.8	-2.5	49.4	13.26	46.9	12.48	44.4	11.70	43.1	11.30	41.8	10.91	39.2	10.12	36.4	9.35
	0.8	0.0	52.2	13.65	49.6	12.85	47.0	12.05	45.7	11.65	44.3	11.25	41.6	10.45	38.8	9.67
	2.8	2.0	54.9	14.02	52.3	13.24	49.6	12.44	48.2	12.04	46.9	11.64	44.1	10.84	40.8	9.92
	6.0	5.0	59.3	14.54	55.6	13.37	51.9	12.27	50.0	11.73	48.2	11.22	44.5	10.19	40.8	9.18
	7.0	6.0	59.3	14.08	55.6	12.97	51.9	11.91	50.0	11.40	48.2	10.86	44.5	9.84	40.8	8.85
	8.6	7.5	59.3	13.42	55.6	12.32	51.9	11.27	50.0	10.76	48.2	10.26	44.5	9.29	40.8	8.36
	11.2	10.0	59.3	12.14	55.6	11.15	51.9	10.20	50.0	9.75	48.2	9.29	44.5	8.42	40.8	7.58
	16.4	15.0	59.3	9.83	55.6	9.03	51.9	8.28	50.0	7.91	48.2	7.55	44.5	6.85	40.8	6.18

Combination(%) :Indoor/outdoor capacity ratio	Outdoor air temp.		Indoor air temp. :℃WB													
			15.0		17.0		19.0		20.0		21.0		23.0		25.0	
			TC	PI	TC	PI	TC	PI	TC	PI	TC	PI	TC	PI	TC	PI
	°CDB	°CWB	kW	kW	kW	kW	kW	kW	kW	kW	kW	kW	kW	kW	kW	kW
90%	-24.9	-25.0	36.4	11.07	34.4	10.45	32.3	9.82	31.3	9.51	30.3	9.20	28.2	8.60	26.0	8.00
	-19.8	-20.0	38.3	11.32	36.2	10.67	34.1	10.03	33.1	9.71	32.0	9.39	29.8	8.78	27.6	8.16
	-14.7	-15.0	40.7	11.64	38.5	10.97	36.3	10.31	35.1	9.98	34.0	9.64	31.7	8.99	29.4	8.36
	-9.6	-10.0	43.6	12.05	41.3	11.35	38.9	10.66	37.8	10.32	36.6	9.98	34.1	9.29	31.6	8.62
	-4.4	-5.0	47.4	12.59	44.9	11.86	42.4	11.13	41.2	10.76	39.9	10.40	37.2	9.67	34.5	8.95
	-1.8	-2.5	49.7	12.92	47.2	12.16	44.6	11.41	43.3	11.04	41.9	10.66	39.2	9.92	36.4	9.18
	0.8	0.0	52.5	13.32	49.9	12.54	46.7	11.58	45.0	11.10	43.4	10.62	40.0	9.71	36.7	8.84
	2.8	2.0	53.4	12.98	50.0	12.02	46.7	11.08	45.0	10.62	43.4	10.18	40.0	9.31	36.7	8.47
	6.0	5.0	53.4	11.98	50.0	11.07	46.7	10.19	45.0	9.76	43.4	9.34	40.0	8.50	36.7	7.71
	7.0	6.0	53.4	11.54	50.0	10.66	46.7	9.82	45.0	9.39	43.4	8.98	40.0	8.20	36.7	7.42
	8.6	7.5	53.4	10.86	50.0	10.03	46.7	9.25	45.0	8.86	43.4	8.47	40.0	7.73	36.7	7.01
	11.2	10.0	53.4	9.78	50.0	9.04	46.7	8.33	45.0	7.98	43.4	7.64	40.0	6.98	36.7	6.33
	16.4	15.0	53.4	7.81	50.0	7.24	46.7	6.69	45.0	6.42	43.4	6.16	40.0	5.63	36.7	5.13

Combination(%) :Indoor/outdoor capacity ratio	Outdoor air temp.		Indoor air temp. :℃WB													
			15.0		17.0		19.0		20.0		21.0		23.0		25.0	
			TC	PI	TC	PI	TC	PI	TC	PI	TC	PI	TC	PI	TC	PI
	°CDB	°CWB	kW	kW	kW	kW	kW	kW	kW	kW	kW	kW	kW	kW	kW	kW
80%	-24.9	-25.0	37.0	10.84	34.9	10.27	32.8	9.69	31.8	9.41	30.7	9.13	28.5	8.57	26.4	8.04
	-19.8	-20.0	39.0	11.12	36.8	10.51	34.6	9.92	33.5	9.62	32.4	9.33	30.2	8.74	27.9	8.19
	-14.7	-15.0	41.4	11.46	39.1	10.83	36.8	10.20	35.6	9.90	34.5	9.58	32.1	8.97	29.7	8.37
	-9.6	-10.0	44.3	11.88	41.9	11.23	39.5	10.56	38.3	10.24	37.0	9.91	34.5	9.26	31.9	8.61
	-4.4	-5.0	47.4	12.15	44.5	11.30	41.5	10.48	40.0	10.08	38.5	9.68	35.6	8.91	32.6	8.19
	-1.8	-2.5	47.4	11.61	44.5	10.81	41.5	10.02	40.0	9.64	38.5	9.27	35.6	8.55	32.6	7.84
	0.8	0.0	47.4	11.06	44.5	10.31	41.5	9.56	40.0	9.20	38.5	8.85	35.6	8.14	32.6	7.46
	2.8	2.0	47.4	10.53	44.5	9.79	41.5	9.09	40.0	8.73	38.5	8.39	35.6	7.72	32.6	7.07
	6.0	5.0	47.4	9.54	44.5	8.88	41.5	8.23	40.0	7.92	38.5	7.60	35.6	6.99	32.6	6.38
	7.0	6.0	47.4	9.17	44.5	8.54	41.5	7.92	40.0	7.62	38.5	7.31	35.6	6.71	32.6	6.14
	8.6	7.5	47.4	8.60	44.5	8.01	41.5	7.43	40.0	7.15	38.5	6.87	35.6	6.32	32.6	5.78
	11.2	10.0	47.4	7.68	44.5	7.17	41.5	6.67	40.0	6.42	38.5	6.17	35.6	5.68	32.6	5.21
	16.4	15.0	47.4	6.06	44.5	5.68	41.5	5.30	40.0	5.11	38.5	4.92	35.6	4.55	32.6	4.20

Combination(%) :Indoor/outdoor capacity ratio	Outdoor air temp.		Indoor air temp. :℃WB													
			15.0		17.0		19.0		20.0		21.0		23.0		25.0	
			TC	PI	TC	PI	TC	PI	TC	PI	TC	PI	TC	PI	TC	PI
	°CDB	°CWB	kW	kW	kW	kW	kW	kW	kW	kW	kW	kW	kW	kW	kW	kW
70%	-24.9	-25.0	38.0	10.88	35.9	10.34	33.7	9.80	32.6	9.54	31.5	9.28	29.2	8.77	27.0	8.27
	-19.8	-20.0	40.1	11.17	37.8	10.60	35.6	10.04	34.4	9.77	33.2	9.50	30.9	8.95	28.5	8.41
	-14.7	-15.0	41.5	11.12	38.9	10.43	36.3	9.77	35.0	9.45	33.7	9.13	31.1	8.52	28.5	7.91
	-9.6	-10.0	41.5	10.43	38.9	9.79	36.3	9.17	35.0	8.86	33.7	8.56	31.1	7.97	28.5	7.40
	-4.4	-5.0	41.5	9.71	38.9	9.12	36.3	8.54	35.0	8.25	33.7	7.97	31.1	7.41	28.5	6.86
	-1.8	-2.5	41.5	9.27	38.9	8.70	36.3	8.14	35.0	7.87	33.7	7.60	31.1	7.07	28.5	6.56
	0.8	0.0	41.5	8.72	38.9	8.19	36.3	7.66	35.0	7.41	33.7	7.16	31.1	6.66	28.5	6.16
	2.8	2.0	41.5	8.24	38.9	7.74	36.3	7.25	35.0	7.00	33.7	6.76	31.1	6.28	28.5	5.81
	6.0	5.0	41.5	7.42	38.9	6.97	36.3	6.52	35.0	6.29	33.7	6.08	31.1	5.63	28.5	5.19
	7.0	6.0	41.5	7.10	38.9	6.67	36.3	6.25	35.0	6.03	33.7	5.83	31.1	5.40	28.5	4.98
	8.6	7.5	41.5	6.63	38.9	6.24	36.3	5.85	35.0	5.65	33.7	5.46	31.1	5.07	28.5	4.69
	11.2	10.0	41.5	5.89	38.9	5.55	36.3	5.22	35.0	5.05	33.7	4.88	31.1	4.54	28.5	4.21
	16.4	15.0	41.5	4.57	38.9	4.33	36.3	4.09	35.0	3.97	33.7	3.85	31.1	3.60	28.5	3.36

2. Capacity Raito of Outdoor Unit (High-COP mode)

U-20ME1E81 (Heatling) **Capacity Ratio 30-130%**

TC: Total capacity (kW), PI: Power input (kW)

Combination(%) :Indoor/outdoor capacity ratio	Outdoor air temp.		Indoor air temp. :℃WB													
			15.0		17.0		19.0		20.0		21.0		23.0		25.0	
			TC	PI	TC	PI	TC	PI	TC	PI	TC	PI	TC	PI	TC	PI
	°CDB	°CWB	kW	kW	kW	kW	kW	kW	kW	kW	kW	kW	kW	kW	kW	kW
60%	-24.9	-25.0	35.6	9.62	33.4	9.15	31.1	8.69	30.0	8.46	28.9	8.23	26.7	7.79	24.5	7.36
	-19.8	-20.0	35.6	9.18	33.4	8.71	31.1	8.27	30.0	8.04	28.9	7.82	26.7	7.39	24.5	6.95
	-14.7	-15.0	35.6	8.72	33.4	8.28	31.1	7.83	30.0	7.62	28.9	7.40	26.7	6.98	24.5	6.56
	-9.6	-10.0	35.6	8.24	33.4	7.82	31.1	7.40	30.0	7.18	28.9	6.98	26.7	6.56	24.5	6.14
	-4.4	-5.0	35.6	7.55	33.4	7.17	31.1	6.79	30.0	6.60	28.9	6.42	26.7	6.04	24.5	5.68
	-1.8	-2.5	35.6	7.14	33.4	6.78	31.1	6.43	30.0	6.25	28.9	6.08	26.7	5.71	24.5	5.36
	0.8	0.0	35.6	6.69	33.4	6.36	31.1	6.02	30.0	5.86	28.9	5.69	26.7	5.36	24.5	5.02
	2.8	2.0	35.6	6.29	33.4	5.97	31.1	5.67	30.0	5.51	28.9	5.35	26.7	5.02	24.5	4.66
	6.0	5.0	35.6	5.60	33.4	5.31	31.1	5.03	30.0	4.88	28.9	4.73	26.7	4.43	24.5	4.14
	7.0	6.0	35.6	5.34	33.4	5.07	31.1	4.80	30.0	4.66	28.9	4.53	26.7	4.25	24.5	3.97
	8.6	7.5	35.6	4.97	33.4	4.73	31.1	4.48	30.0	4.35	28.9	4.23	26.7	3.98	24.5	3.72
	11.2	10.0	35.6	4.38	33.4	4.17	31.1	3.98	30.0	3.88	28.9	3.76	26.7	3.56	24.5	3.33
	16.4	15.0	35.6	3.81	33.4	3.60	31.1	3.39	30.0	3.28	28.9	3.18	26.7	2.98	24.5	2.76

Combination(%) :Indoor/outdoor capacity ratio	Outdoor air temp.		Indoor air temp. :℃WB													
			15.0		17.0		19.0		20.0		21.0		23.0		25.0	
			TC	PI	TC	PI	TC	PI	TC	PI	TC	PI	TC	PI	TC	PI
	°CDB	°CWB	kW	kW	kW	kW	kW	kW	kW	kW	kW	kW	kW	kW	kW	kW
50%	-24.9	-25.0	29.7	7.47	27.8	7.18	26.0	6.89	25.0	6.75	24.1	6.60	22.2	6.32	20.4	6.03
	-19.8	-20.0	29.7	7.16	27.8	6.86	26.0	6.57	25.0	6.43	24.1	6.28	22.2	5.99	20.4	5.70
	-14.7	-15.0	29.7	6.79	27.8	6.53	26.0	6.26	25.0	6.11	24.1	5.96	22.2	5.67	20.4	5.37
	-9.6	-10.0	29.7	6.30	27.8	6.08	26.0	5.84	25.0	5.71	24.1	5.59	22.2	5.34	20.4	5.04
	-4.4	-5.0	29.7	5.72	27.8	5.51	26.0	5.29	25.0	5.19	24.1	5.07	22.2	4.83	20.4	4.59
	-1.8	-2.5	29.7	5.38	27.8	5.19	26.0	4.98	25.0	4.88	24.1	4.77	22.2	4.55	20.4	4.31
	0.8	0.0	29.7	5.00	27.8	4.82	26.0	4.63	25.0	4.54	24.1	4.43	22.2	4.18	20.4	3.92
	2.8	2.0	29.7	4.66	27.8	4.49	26.0	4.30	25.0	4.20	24.1	4.08	22.2	3.86	20.4	3.64
	6.0	5.0	29.7	4.07	27.8	3.92	26.0	3.75	25.0	3.67	24.1	3.58	22.2	3.40	20.4	3.21
	7.0	6.0	29.7	3.88	27.8	3.73	26.0	3.58	25.0	3.50	24.1	3.42	22.2	3.26	20.4	3.08
	8.6	7.5	29.7	3.58	27.8	3.47	26.0	3.33	25.0	3.26	24.1	3.19	22.2	3.04	20.4	2.88
	11.2	10.0	29.7	3.25	27.8	3.08	26.0	2.93	25.0	2.88	24.1	2.83	22.2	2.70	20.4	2.58
	16.4	15.0	29.7	3.25	27.8	3.08	26.0	2.91	25.0	2.82	24.1	2.72	22.2	2.55	20.4	2.38

Combination(%) :Indoor/outdoor capacity ratio	Outdoor air temp.		Indoor air temp. :℃WB													
			15.0		17.0		19.0		20.0		21.0		23.0		25.0	
			TC	PI	TC	PI	TC	PI	TC	PI	TC	PI	TC	PI	TC	PI
	°CDB	°CWB	kW	kW	kW	kW	kW	kW	kW	kW	kW	kW	kW	kW	kW	kW
40%	-24.9	-25.0	23.7	5.76	22.2	5.57	20.8	5.40	20.0	5.31	19.3	5.22	17.8	5.04	16.3	4.86
	-19.8	-20.0	23.7	5.48	22.2	5.34	20.8	5.15	20.0	5.06	19.3	4.97	17.8	4.78	16.3	4.58
	-14.7	-15.0	23.7	5.13	22.2	5.02	20.8	4.88	20.0	4.80	19.3	4.72	17.8	4.53	16.3	4.32
	-9.6	-10.0	23.7	4.73	22.2	4.63	20.8	4.50	20.0	4.43	19.3	4.37	17.8	4.22	16.3	4.05
	-4.4	-5.0	23.7	4.24	22.2	4.15	20.8	4.04	20.0	3.99	19.3	3.92	17.8	3.76	16.3	3.56
	-1.8	-2.5	23.7	3.94	22.2	3.86	20.8	3.76	20.0	3.68	19.3	3.60	17.8	3.43	16.3	3.25
	0.8	0.0	23.7	3.63	22.2	3.51	20.8	3.40	20.0	3.33	19.3	3.26	17.8	3.12	16.3	2.96
	2.8	2.0	23.7	3.29	22.2	3.20	20.8	3.11	20.0	3.06	19.3	3.00	17.8	2.87	16.3	2.74
	6.0	5.0	23.7	2.83	22.2	2.77	20.8	2.70	20.0	2.66	19.3	2.62	17.8	2.52	16.3	2.42
	7.0	6.0	23.7	2.69	22.2	2.63	20.8	2.58	20.0	2.54	19.3	2.50	17.8	2.42	16.3	2.31
	8.6	7.5	23.7	2.69	22.2	2.55	20.8	2.42	20.0	2.36	19.3	2.33	17.8	2.26	16.3	2.17
	11.2	10.0	23.7	2.69	22.2	2.55	20.8	2.42	20.0	2.35	19.3	2.28	17.8	2.14	16.3	2.00
	16.4	15.0	23.7	2.69	22.2	2.55	20.8	2.42	20.0	2.35	19.3	2.28	17.8	2.14	16.3	2.00

Combination(%) :Indoor/outdoor capacity ratio	Outdoor air temp.		Indoor air temp. :℃WB													
			15.0		17.0		19.0		20.0		21.0		23.0		25.0	
			TC	PI	TC	PI	TC	PI	TC	PI	TC	PI	TC	PI	TC	PI
	°CDB	°CWB	kW	kW	kW	kW	kW	kW	kW	kW	kW	kW	kW	kW	kW	kW
30%	-24.9	-25.0	17.8	4.31	16.7	4.22	15.6	4.12	15.0	4.06	14.5	4.00	13.4	3.89	12.2	3.77
	-19.8	-20.0	17.8	4.06	16.7	4.00	15.6	3.92	15.0	3.86	14.5	3.81	13.4	3.68	12.2	3.55
	-14.7	-15.0	17.8	3.78	16.7	3.74	15.6	3.68	15.0	3.64	14.5	3.59	13.4	3.48	12.2	3.34
	-9.6	-10.0	17.8	3.47	16.7	3.42	15.6	3.37	15.0	3.34	14.5	3.31	13.4	3.17	12.2	3.02
	-4.4	-5.0	17.8	3.02	16.7	2.95	15.6	2.87	15.0	2.83	14.5	2.78	13.4	2.68	12.2	2.57
	-1.8	-2.5	17.8	2.71	16.7	2.67	15.6	2.60	15.0	2.57	14.5	2.53	13.4	2.45	12.2	2.35
	0.8	0.0	17.8	2.42	16.7	2.38	15.6	2.35	15.0	2.31	14.5	2.29	13.4	2.22	12.2	2.14
	2.8	2.0	17.8	2.19	16.7	2.18	15.6	2.14	15.0	2.12	14.5	2.10	13.4	2.05	12.2	1.98
	6.0	5.0	17.8	2.14	16.7	2.03	15.6	1.93	15.0	1.88	14.5	1.84	13.4	1.80	12.2	1.76
	7.0	6.0	17.8	2.14	16.7	2.03	15.6	1.93	15.0	1.88	14.5	1.82	13.4	1.72	12.2	1.68
	8.6	7.5	17.8	2.14	16.7	2.03	15.6	1.93	15.0	1.88	14.5	1.82	13.4	1.72	12.2	1.62
	11.2	10.0	17.8	2.14	16.7	2.03	15.6	1.93	15.0	1.88	14.5	1.82	13.4	1.72	12.2	1.62
	16.4	15.0	17.8	2.14	16.7	2.03	15.6	1.93	15.0	1.88	14.5	1.82	13.4	1.72	12.2	1.62

3. Cooling Capacity of Indoor Unit

3-1. 4-Way Cassette Type (U1 Type)

• S-22MU1E51, S-22MU1E5

Power supply :220/230/240V 1phase-50,60Hz TC : Total Cooling Capacity (kW) SHC : Sensible Heat Capacity (kW)

This data is when the indoor unit connects with 16HP outdoor unit.

RATING CAPACITY:		2.2 kW	AIR FLOW RATE: 14.0 m³/min														
EVAPORATOR			CONDENSER														
AIR INTAKE. TEMP			AMBIENT TEMP. (°C)														
W.B.	D.B.		15	17	19	21	23	25	27	29	31	33	35	37	39	41	43
14		TC	1.5	1.5	1.5	1.5	1.5	1.5	1.5	1.5	1.5	1.5	1.5	1.5	1.5	1.5	1.5
	21	SHC	1.5	1.5	1.5	1.5	1.5	1.5	1.5	1.5	1.5	1.5	1.5	1.5	1.5	1.5	1.5
	23	SHC	1.5	1.5	1.5	1.5	1.5	1.5	1.5	1.5	1.5	1.5	1.5	1.5	1.5	1.5	1.5
	25	SHC	1.5	1.5	1.5	1.5	1.5	1.5	1.5	1.5	1.5	1.5	1.5	1.5	1.5	1.5	1.5
	27	SHC	1.5	1.5	1.5	1.5	1.5	1.5	1.5	1.5	1.5	1.5	1.5	1.5	1.5	1.5	1.5
15		TC	1.6	1.6	1.6	1.6	1.6	1.6	1.6	1.6	1.6	1.6	1.6	1.6	1.6	1.6	1.6
	21	SHC	1.6	1.6	1.6	1.6	1.6	1.6	1.6	1.6	1.6	1.6	1.6	1.6	1.6	1.6	1.6
	23	SHC	1.6	1.6	1.6	1.6	1.6	1.6	1.6	1.6	1.6	1.6	1.6	1.6	1.6	1.6	1.6
	25	SHC	1.6	1.6	1.6	1.6	1.6	1.6	1.6	1.6	1.6	1.6	1.6	1.6	1.6	1.6	1.6
	27	SHC	1.6	1.6	1.6	1.6	1.6	1.6	1.6	1.6	1.6	1.6	1.6	1.6	1.6	1.6	1.6
16		TC	1.8	1.8	1.8	1.8	1.8	1.8	1.8	1.8	1.8	1.8	1.8	1.8	1.8	1.8	1.8
	21	SHC	1.5	1.5	1.5	1.5	1.5	1.5	1.5	1.5	1.5	1.5	1.5	1.5	1.5	1.5	1.5
	23	SHC	1.8	1.8	1.8	1.8	1.8	1.8	1.8	1.8	1.8	1.8	1.8	1.8	1.8	1.8	1.8
	25	SHC	1.8	1.8	1.8	1.8	1.8	1.8	1.8	1.8	1.8	1.8	1.8	1.8	1.8	1.8	1.8
	27	SHC	1.8	1.8	1.8	1.8	1.8	1.8	1.8	1.8	1.8	1.8	1.8	1.8	1.8	1.8	1.8
	29	SHC	1.8	1.8	1.8	1.8	1.8	1.8	1.8	1.8	1.8	1.8	1.8	1.8	1.8	1.8	1.8
17		TC	1.9	1.9	1.9	1.9	1.9	1.9	1.9	1.9	1.9	1.9	1.9	1.9	1.9	1.9	1.9
	21	SHC	1.4	1.4	1.4	1.4	1.4	1.4	1.4	1.4	1.4	1.4	1.4	1.4	1.4	1.4	1.4
	23	SHC	1.7	1.7	1.7	1.7	1.7	1.7	1.7	1.7	1.7	1.7	1.7	1.7	1.7	1.7	1.7
	25	SHC	1.9	1.9	1.9	1.9	1.9	1.9	1.9	1.9	1.9	1.9	1.9	1.9	1.9	1.9	1.9
	27	SHC	1.9	1.9	1.9	1.9	1.9	1.9	1.9	1.9	1.9	1.9	1.9	1.9	1.9	1.9	1.9
	29	SHC	1.9	1.9	1.9	1.9	1.9	1.9	1.9	1.9	1.9	1.9	1.9	1.9	1.9	1.9	1.9
18		TC	2.1	2.1	2.1	2.1	2.1	2.1	2.1	2.1	2.1	2.1	2.1	2.1	2.1	2.1	2.1
	21	SHC	1.2	1.2	1.2	1.2	1.2	1.2	1.2	1.2	1.2	1.2	1.2	1.2	1.2	1.2	1.2
	23	SHC	1.6	1.6	1.6	1.6	1.6	1.6	1.6	1.6	1.6	1.6	1.6	1.6	1.6	1.6	1.6
	25	SHC	1.9	1.9	1.9	1.9	1.9	1.9	1.9	1.9	1.9	1.9	1.9	1.9	1.9	1.9	1.9
	27	SHC	2.1	2.1	2.1	2.1	2.1	2.1	2.1	2.1	2.1	2.1	2.1	2.1	2.1	2.1	2.1
	29	SHC	2.1	2.1	2.1	2.1	2.1	2.1	2.1	2.1	2.1	2.1	2.1	2.1	2.1	2.1	2.1
	31	SHC	2.1	2.1	2.1	2.1	2.1	2.1	2.1	2.1	2.1	2.1	2.1	2.1	2.1	2.1	2.1
19		TC	2.2	2.2	2.2	2.2	2.2	2.2	2.2	2.2	2.2	2.2	2.2	2.2	2.2	2.2	2.2
	21	SHC	1.1	1.1	1.1	1.1	1.1	1.1	1.1	1.1	1.1	1.1	1.1	1.1	1.1	1.1	1.1
	23	SHC	1.4	1.4	1.4	1.4	1.4	1.4	1.4	1.4	1.4	1.4	1.4	1.4	1.4	1.4	1.4
	25	SHC	1.8	1.8	1.8	1.8	1.8	1.8	1.8	1.8	1.8	1.8	1.8	1.8	1.8	1.8	1.8
	27	SHC	2.1	2.1	2.1	2.1	2.1	2.1	2.1	2.1	2.1	2.1	2.1	2.1	2.1	2.1	2.1
	29	SHC	2.2	2.2	2.2	2.2	2.2	2.2	2.2	2.2	2.2	2.2	2.2	2.2	2.2	2.2	2.2
	31	SHC	2.2	2.2	2.2	2.2	2.2	2.2	2.2	2.2	2.2	2.2	2.2	2.2	2.2	2.2	2.2
20		TC	2.3	2.3	2.3	2.3	2.3	2.3	2.3	2.3	2.3	2.3	2.3	2.3	2.3	2.3	2.3
	23	SHC	1.3	1.3	1.3	1.3	1.3	1.3	1.3	1.3	1.3	1.3	1.3	1.3	1.3	1.3	1.3
	25	SHC	1.6	1.6	1.6	1.6	1.6	1.6	1.6	1.6	1.6	1.6	1.6	1.6	1.6	1.6	1.6
	27	SHC	2.0	2.0	2.0	2.0	2.0	2.0	2.0	2.0	2.0	2.0	2.0	2.0	2.0	2.0	2.0
	29	SHC	2.3	2.3	2.3	2.3	2.3	2.3	2.3	2.3	2.3	2.3	2.3	2.3	2.3	2.3	2.3
	31	SHC	2.3	2.3	2.3	2.3	2.3	2.3	2.3	2.3	2.3	2.3	2.3	2.3	2.3	2.3	2.3
21		TC	2.5	2.5	2.5	2.5	2.5	2.5	2.5	2.5	2.5	2.5	2.5	2.5	2.5	2.4	2.3
	23	SHC	1.1	1.1	1.1	1.1	1.1	1.1	1.1	1.1	1.1	1.1	1.1	1.1	1.1	1.1	1.1
	25	SHC	1.5	1.5	1.5	1.5	1.5	1.5	1.5	1.5	1.5	1.5	1.5	1.5	1.5	1.4	1.4
	27	SHC	1.8	1.8	1.8	1.8	1.8	1.8	1.8	1.8	1.8	1.8	1.8	1.8	1.8	1.8	1.8
	29	SHC	2.2	2.2	2.2	2.2	2.2	2.2	2.2	2.2	2.2	2.2	2.2	2.2	2.2	2.1	2.1
	31	SHC	2.5	2.5	2.5	2.5	2.5	2.5	2.5	2.5	2.5	2.5	2.5	2.5	2.5	2.4	2.3
22		TC	2.6	2.6	2.6	2.6	2.6	2.6	2.6	2.6	2.6	2.6	2.6	2.6	2.5	2.4	2.4
	25	SHC	1.3	1.3	1.3	1.3	1.3	1.3	1.3	1.3	1.3	1.3	1.3	1.3	1.3	1.3	1.2
	27	SHC	1.7	1.7	1.7	1.7	1.7	1.7	1.7	1.7	1.7	1.7	1.7	1.7	1.6	1.6	1.6
	29	SHC	2.0	2.0	2.0	2.0	2.0	2.0	2.0	2.0	2.0	2.0	2.0	2.0	2.0	1.9	1.9
	31	SHC	2.4	2.4	2.4	2.4	2.4	2.4	2.4	2.4	2.4	2.4	2.4	2.3	2.3	2.3	2.3
23		TC	2.8	2.8	2.8	2.8	2.8	2.8	2.8	2.8	2.8	2.8	2.7	2.6	2.6	2.5	2.4
	25	SHC	1.2	1.2	1.2	1.2	1.2	1.2	1.2	1.2	1.2	1.2	1.2	1.1	1.1	1.1	1.1
	27	SHC	1.5	1.5	1.5	1.5	1.5	1.5	1.5	1.5	1.5	1.5	1.5	1.5	1.4	1.4	1.4
	29	SHC	1.9	1.9	1.9	1.9	1.9	1.9	1.9	1.9	1.9	1.9	1.8	1.8	1.8	1.8	1.8
	31	SHC	2.2	2.2	2.2	2.2	2.2	2.2	2.2	2.2	2.2	2.2	2.2	2.2	2.1	2.1	2.1

3. Cooling Capacity of Indoor Unit

● S-28MU1E51, S-28MU1E5

Power supply : 220/230/240V 1phase-50,60Hz TC : Total Cooling Capacity (kW) SHC : Sensible Heat Capacity (kW)

This data is when the indoor unit connects with 16HP outdoor unit.

RATING CAPACITY:		2.8 kW AIR FLOW RATE: 14.0 m³/min																
EVAPORATOR		CONDENSER																
AIR INTAKE. TEMP		AMBIENT TEMP. (°C)																
W.B.	D.B.		15	17	19	21	23	25	27	29	31	33	35	37	39	41	43
14		TC	1.9	1.9	1.9	1.9	1.9	1.9	1.9	1.9	1.9	1.9	1.9	1.9	1.9	1.9	1.9
	21	SHC	1.9	1.9	1.9	1.9	1.9	1.9	1.9	1.9	1.9	1.9	1.9	1.9	1.9	1.9	1.9
	23	SHC	1.9	1.9	1.9	1.9	1.9	1.9	1.9	1.9	1.9	1.9	1.9	1.9	1.9	1.9	1.9
	25	SHC	1.9	1.9	1.9	1.9	1.9	1.9	1.9	1.9	1.9	1.9	1.9	1.9	1.9	1.9	1.9
	27	SHC	1.9	1.9	1.9	1.9	1.9	1.9	1.9	1.9	1.9	1.9	1.9	1.9	1.9	1.9	1.9
15		TC	2.1	2.1	2.1	2.1	2.1	2.1	2.1	2.1	2.1	2.1	2.1	2.1	2.1	2.1	2.1
	21	SHC	2.1	2.1	2.1	2.1	2.1	2.1	2.1	2.1	2.1	2.1	2.1	2.1	2.1	2.1	2.1
	23	SHC	2.1	2.1	2.1	2.1	2.1	2.1	2.1	2.1	2.1	2.1	2.1	2.1	2.1	2.1	2.1
	25	SHC	2.1	2.1	2.1	2.1	2.1	2.1	2.1	2.1	2.1	2.1	2.1	2.1	2.1	2.1	2.1
	27	SHC	2.1	2.1	2.1	2.1	2.1	2.1	2.1	2.1	2.1	2.1	2.1	2.1	2.1	2.1	2.1
16		TC	2.2	2.2	2.2	2.2	2.2	2.2	2.2	2.2	2.2	2.2	2.2	2.2	2.2	2.2	2.2
	21	SHC	1.9	1.9	1.9	1.9	1.9	1.9	1.9	1.9	1.9	1.9	1.9	1.9	1.9	1.9	1.9
	23	SHC	2.2	2.2	2.2	2.2	2.2	2.2	2.2	2.2	2.2	2.2	2.2	2.2	2.2	2.2	2.2
	25	SHC	2.2	2.2	2.2	2.2	2.2	2.2	2.2	2.2	2.2	2.2	2.2	2.2	2.2	2.2	2.2
	27	SHC	2.2	2.2	2.2	2.2	2.2	2.2	2.2	2.2	2.2	2.2	2.2	2.2	2.2	2.2	2.2
	29	SHC	2.2	2.2	2.2	2.2	2.2	2.2	2.2	2.2	2.2	2.2	2.2	2.2	2.2	2.2	2.2
17		TC	2.4	2.4	2.4	2.4	2.4	2.4	2.4	2.4	2.4	2.4	2.4	2.4	2.4	2.4	2.4
	21	SHC	1.8	1.8	1.8	1.8	1.8	1.8	1.8	1.8	1.8	1.8	1.8	1.8	1.8	1.8	1.8
	23	SHC	2.2	2.2	2.2	2.2	2.2	2.2	2.2	2.2	2.2	2.2	2.2	2.2	2.2	2.2	2.2
	25	SHC	2.4	2.4	2.4	2.4	2.4	2.4	2.4	2.4	2.4	2.4	2.4	2.4	2.4	2.4	2.4
	27	SHC	2.4	2.4	2.4	2.4	2.4	2.4	2.4	2.4	2.4	2.4	2.4	2.4	2.4	2.4	2.4
	29	SHC	2.4	2.4	2.4	2.4	2.4	2.4	2.4	2.4	2.4	2.4	2.4	2.4	2.4	2.4	2.4
18		TC	2.6	2.6	2.6	2.6	2.6	2.6	2.6	2.6	2.6	2.6	2.6	2.6	2.6	2.6	2.6
	21	SHC	1.6	1.6	1.6	1.6	1.6	1.6	1.6	1.6	1.6	1.6	1.6	1.6	1.6	1.6	1.6
	23	SHC	2.0	2.0	2.0	2.0	2.0	2.0	2.0	2.0	2.0	2.0	2.0	2.0	2.0	2.0	2.0
	25	SHC	2.4	2.4	2.4	2.4	2.4	2.4	2.4	2.4	2.4	2.4	2.4	2.4	2.4	2.4	2.4
	27	SHC	2.6	2.6	2.6	2.6	2.6	2.6	2.6	2.6	2.6	2.6	2.6	2.6	2.6	2.6	2.6
	29	SHC	2.6	2.6	2.6	2.6	2.6	2.6	2.6	2.6	2.6	2.6	2.6	2.6	2.6	2.6	2.6
	31	SHC	2.6	2.6	2.6	2.6	2.6	2.6	2.6	2.6	2.6	2.6	2.6	2.6	2.6	2.6	2.6
19		TC	2.8	2.8	2.8	2.8	2.8	2.8	2.8	2.8	2.8	2.8	2.8	2.8	2.8	2.8	2.8
	21	SHC	1.4	1.4	1.4	1.4	1.4	1.4	1.4	1.4	1.4	1.4	1.4	1.4	1.4	1.4	1.4
	23	SHC	1.8	1.8	1.8	1.8	1.8	1.8	1.8	1.8	1.8	1.8	1.8	1.8	1.8	1.8	1.8
	25	SHC	2.3	2.3	2.3	2.3	2.3	2.3	2.3	2.3	2.3	2.3	2.3	2.3	2.3	2.3	2.3
	27	SHC	2.7	2.7	2.7	2.7	2.7	2.7	2.7	2.7	2.7	2.7	2.7	2.7	2.7	2.7	2.7
	29	SHC	2.8	2.8	2.8	2.8	2.8	2.8	2.8	2.8	2.8	2.8	2.8	2.8	2.8	2.8	2.8
	31	SHC	2.8	2.8	2.8	2.8	2.8	2.8	2.8	2.8	2.8	2.8	2.8	2.8	2.8	2.8	2.8
20		TC	3.0	3.0	3.0	3.0	3.0	3.0	3.0	3.0	3.0	3.0	3.0	3.0	3.0	3.0	2.9
	23	SHC	1.6	1.6	1.6	1.6	1.6	1.6	1.6	1.6	1.6	1.6	1.6	1.6	1.6	1.6	1.6
	25	SHC	2.1	2.1	2.1	2.1	2.1	2.1	2.1	2.1	2.1	2.1	2.1	2.1	2.1	2.1	2.1
	27	SHC	2.5	2.5	2.5	2.5	2.5	2.5	2.5	2.5	2.5	2.5	2.5	2.5	2.5	2.5	2.5
	29	SHC	2.9	2.9	2.9	2.9	2.9	2.9	2.9	2.9	2.9	2.9	2.9	2.9	2.9	2.9	2.9
	31	SHC	3.0	3.0	3.0	3.0	3.0	3.0	3.0	3.0	3.0	3.0	3.0	3.0	3.0	3.0	2.9
21		TC	3.2	3.2	3.2	3.2	3.2	3.2	3.2	3.2	3.2	3.2	3.2	3.2	3.1	3.0	3.0
	23	SHC	1.4	1.4	1.4	1.4	1.4	1.4	1.4	1.4	1.4	1.4	1.4	1.4	1.4	1.4	1.4
	25	SHC	1.9	1.9	1.9	1.9	1.9	1.9	1.9	1.9	1.9	1.9	1.9	1.9	1.9	1.8	1.8
	27	SHC	2.3	2.3	2.3	2.3	2.3	2.3	2.3	2.3	2.3	2.3	2.3	2.3	2.3	2.3	2.3
	29	SHC	2.7	2.7	2.7	2.7	2.7	2.7	2.7	2.7	2.7	2.7	2.7	2.7	2.7	2.7	2.7
	31	SHC	3.2	3.2	3.2	3.2	3.2	3.2	3.2	3.2	3.2	3.2	3.2	3.2	3.1	3.0	3.0
22		TC	3.4	3.4	3.4	3.4	3.4	3.4	3.4	3.4	3.4	3.4	3.4	3.3	3.2	3.1	3.1
	25	SHC	1.7	1.7	1.7	1.7	1.7	1.7	1.7	1.7	1.7	1.7	1.7	1.7	1.6	1.6	1.6
	27	SHC	2.1	2.1	2.1	2.1	2.1	2.1	2.1	2.1	2.1	2.1	2.1	2.1	2.1	2.0	2.0
	29	SHC	2.6	2.6	2.6	2.6	2.6	2.6	2.6	2.6	2.6	2.6	2.6	2.5	2.5	2.5	2.4
	31	SHC	3.0	3.0	3.0	3.0	3.0	3.0	3.0	3.0	3.0	3.0	3.0	3.0	2.9	2.9	2.9
23		TC	3.5	3.5	3.5	3.5	3.5	3.5	3.5	3.5	3.5	3.5	3.4	3.3	3.3	3.2	3.1
	25	SHC	1.5	1.5	1.5	1.5	1.5	1.5	1.5	1.5	1.5	1.5	1.5	1.4	1.4	1.4	1.4
	27	SHC	1.9	1.9	1.9	1.9	1.9	1.9	1.9	1.9	1.9	1.9	1.9	1.9	1.8	1.8	1.8
	29	SHC	2.4	2.4	2.4	2.4	2.4	2.4	2.4	2.4	2.4	2.4	2.3	2.3	2.3	2.2	2.2
	31	SHC	2.8	2.8	2.8	2.8	2.8	2.8	2.8	2.8	2.8	2.8	2.8	2.7	2.7	2.7	2.7

3. Cooling Capacity of Indoor Unit

● S-36MU1E51, S-36MU1E5

Power supply : 220/230/240V 1phase-50,60Hz TC : Total Cooling Capacity (kW) SHC : Sensible Heat Capacity (kW)

This data is when the indoor unit connects with 16HP outdoor unit.

RATING CAPACITY:		3.6 kW	AIR FLOW RATE: 14.0 m³/min														
EVAPORATOR			CONDENSER														
AIR INTAKE. TEMP			AMBIENT TEMP. (°C)														
W.B.	D.B.		15	17	19	21	23	25	27	29	31	33	35	37	39	41	43
14		TC	2.4	2.4	2.4	2.4	2.4	2.4	2.4	2.4	2.4	2.4	2.4	2.4	2.4	2.4	2.4
	21	SHC	2.4	2.4	2.4	2.4	2.4	2.4	2.4	2.4	2.4	2.4	2.4	2.4	2.4	2.4	2.4
	23	SHC	2.4	2.4	2.4	2.4	2.4	2.4	2.4	2.4	2.4	2.4	2.4	2.4	2.4	2.4	2.4
	25	SHC	2.4	2.4	2.4	2.4	2.4	2.4	2.4	2.4	2.4	2.4	2.4	2.4	2.4	2.4	2.4
	27	SHC	2.4	2.4	2.4	2.4	2.4	2.4	2.4	2.4	2.4	2.4	2.4	2.4	2.4	2.4	2.4
15		TC	2.6	2.6	2.6	2.6	2.6	2.6	2.6	2.6	2.6	2.6	2.6	2.6	2.6	2.6	2.6
	21	SHC	2.4	2.4	2.4	2.4	2.4	2.4	2.4	2.4	2.4	2.4	2.4	2.4	2.4	2.4	2.4
	23	SHC	2.6	2.6	2.6	2.6	2.6	2.6	2.6	2.6	2.6	2.6	2.6	2.6	2.6	2.6	2.6
	25	SHC	2.6	2.6	2.6	2.6	2.6	2.6	2.6	2.6	2.6	2.6	2.6	2.6	2.6	2.6	2.6
	27	SHC	2.6	2.6	2.6	2.6	2.6	2.6	2.6	2.6	2.6	2.6	2.6	2.6	2.6	2.6	2.6
16		TC	2.9	2.9	2.9	2.9	2.9	2.9	2.9	2.9	2.9	2.9	2.9	2.9	2.9	2.9	2.9
	21	SHC	2.3	2.3	2.3	2.3	2.3	2.3	2.3	2.3	2.3	2.3	2.3	2.3	2.3	2.3	2.3
	23	SHC	2.7	2.7	2.7	2.7	2.7	2.7	2.7	2.7	2.7	2.7	2.7	2.7	2.7	2.7	2.7
	25	SHC	2.9	2.9	2.9	2.9	2.9	2.9	2.9	2.9	2.9	2.9	2.9	2.9	2.9	2.9	2.9
	27	SHC	2.9	2.9	2.9	2.9	2.9	2.9	2.9	2.9	2.9	2.9	2.9	2.9	2.9	2.9	2.9
	29	SHC	2.9	2.9	2.9	2.9	2.9	2.9	2.9	2.9	2.9	2.9	2.9	2.9	2.9	2.9	2.9
17		TC	3.1	3.1	3.1	3.1	3.1	3.1	3.1	3.1	3.1	3.1	3.1	3.1	3.1	3.1	3.1
	21	SHC	2.1	2.1	2.1	2.1	2.1	2.1	2.1	2.1	2.1	2.1	2.1	2.1	2.1	2.1	2.1
	23	SHC	2.6	2.6	2.6	2.6	2.6	2.6	2.6	2.6	2.6	2.6	2.6	2.6	2.6	2.6	2.6
	25	SHC	3.0	3.0	3.0	3.0	3.0	3.0	3.0	3.0	3.0	3.0	3.0	3.0	3.0	3.0	3.0
	27	SHC	3.1	3.1	3.1	3.1	3.1	3.1	3.1	3.1	3.1	3.1	3.1	3.1	3.1	3.1	3.1
	29	SHC	3.1	3.1	3.1	3.1	3.1	3.1	3.1	3.1	3.1	3.1	3.1	3.1	3.1	3.1	3.1
18		TC	3.4	3.4	3.4	3.4	3.4	3.4	3.4	3.4	3.4	3.4	3.4	3.4	3.4	3.4	3.4
	21	SHC	1.9	1.9	1.9	1.9	1.9	1.9	1.9	1.9	1.9	1.9	1.9	1.9	1.9	1.9	1.9
	23	SHC	2.4	2.4	2.4	2.4	2.4	2.4	2.4	2.4	2.4	2.4	2.4	2.4	2.4	2.4	2.4
	25	SHC	2.8	2.8	2.8	2.8	2.8	2.8	2.8	2.8	2.8	2.8	2.8	2.8	2.8	2.8	2.8
	27	SHC	3.3	3.3	3.3	3.3	3.3	3.3	3.3	3.3	3.3	3.3	3.3	3.3	3.3	3.3	3.3
	29	SHC	3.4	3.4	3.4	3.4	3.4	3.4	3.4	3.4	3.4	3.4	3.4	3.4	3.4	3.4	3.4
	31	SHC	3.4	3.4	3.4	3.4	3.4	3.4	3.4	3.4	3.4	3.4	3.4	3.4	3.4	3.4	3.4
19		TC	3.6	3.6	3.6	3.6	3.6	3.6	3.6	3.6	3.6	3.6	3.6	3.6	3.6	3.6	3.6
	21	SHC	1.7	1.7	1.7	1.7	1.7	1.7	1.7	1.7	1.7	1.7	1.7	1.7	1.7	1.7	1.7
	23	SHC	2.2	2.2	2.2	2.2	2.2	2.2	2.2	2.2	2.2	2.2	2.2	2.2	2.2	2.2	2.2
	25	SHC	2.6	2.6	2.6	2.6	2.6	2.6	2.6	2.6	2.6	2.6	2.6	2.6	2.6	2.6	2.6
	27	SHC	3.1	3.1	3.1	3.1	3.1	3.1	3.1	3.1	3.1	3.1	3.1	3.1	3.1	3.1	3.1
	29	SHC	3.6	3.6	3.6	3.6	3.6	3.6	3.6	3.6	3.6	3.6	3.6	3.6	3.6	3.6	3.6
	31	SHC	3.6	3.6	3.6	3.6	3.6	3.6	3.6	3.6	3.6	3.6	3.6	3.6	3.6	3.6	3.6
20		TC	3.8	3.8	3.8	3.8	3.8	3.8	3.8	3.8	3.8	3.8	3.8	3.8	3.8	3.8	3.8
	23	SHC	2.0	2.0	2.0	2.0	2.0	2.0	2.0	2.0	2.0	2.0	2.0	2.0	2.0	2.0	2.0
	25	SHC	2.5	2.5	2.5	2.5	2.5	2.5	2.5	2.5	2.5	2.5	2.5	2.5	2.5	2.4	2.4
	27	SHC	2.9	2.9	2.9	2.9	2.9	2.9	2.9	2.9	2.9	2.9	2.9	2.9	2.9	2.9	2.9
	29	SHC	3.4	3.4	3.4	3.4	3.4	3.4	3.4	3.4	3.4	3.4	3.4	3.4	3.4	3.4	3.4
	31	SHC	3.8	3.8	3.8	3.8	3.8	3.8	3.8	3.8	3.8	3.8	3.8	3.8	3.8	3.8	3.8
21		TC	4.1	4.1	4.1	4.1	4.1	4.1	4.1	4.1	4.1	4.1	4.1	4.1	4.0	3.9	3.8
	23	SHC	1.8	1.8	1.8	1.8	1.8	1.8	1.8	1.8	1.8	1.8	1.8	1.8	1.8	1.7	1.7
	25	SHC	2.3	2.3	2.3	2.3	2.3	2.3	2.3	2.3	2.3	2.3	2.3	2.3	2.2	2.2	2.2
	27	SHC	2.7	2.7	2.7	2.7	2.7	2.7	2.7	2.7	2.7	2.7	2.7	2.7	2.7	2.7	2.6
	29	SHC	3.2	3.2	3.2	3.2	3.2	3.2	3.2	3.2	3.2	3.2	3.2	3.2	3.2	3.1	3.1
	31	SHC	3.7	3.7	3.7	3.7	3.7	3.7	3.7	3.7	3.7	3.7	3.7	3.7	3.6	3.6	3.6
22		TC	4.3	4.3	4.3	4.3	4.3	4.3	4.3	4.3	4.3	4.3	4.3	4.2	4.1	4.0	3.9
	25	SHC	2.1	2.1	2.1	2.1	2.1	2.1	2.1	2.1	2.1	2.1	2.1	2.0	2.0	1.9	1.9
	27	SHC	2.5	2.5	2.5	2.5	2.5	2.5	2.5	2.5	2.5	2.5	2.5	2.5	2.4	2.4	2.4
	29	SHC	3.0	3.0	3.0	3.0	3.0	3.0	3.0	3.0	3.0	3.0	3.0	2.9	2.9	2.9	2.8
	31	SHC	3.5	3.5	3.5	3.5	3.5	3.5	3.5	3.5	3.5	3.5	3.5	3.4	3.4	3.3	3.3
23		TC	4.6	4.6	4.6	4.6	4.6	4.6	4.6	4.6	4.6	4.6	4.4	4.3	4.2	4.1	4.0
	25	SHC	1.8	1.8	1.8	1.8	1.8	1.8	1.8	1.8	1.8	1.8	1.8	1.8	1.7	1.7	1.7
	27	SHC	2.3	2.3	2.3	2.3	2.3	2.3	2.3	2.3	2.3	2.3	2.3	2.2	2.2	2.1	2.1
	29	SHC	2.8	2.8	2.8	2.8	2.8	2.8	2.8	2.8	2.8	2.8	2.7	2.7	2.6	2.6	2.6
	31	SHC	3.2	3.2	3.2	3.2	3.2	3.2	3.2	3.2	3.2	3.2	3.2	3.2	3.1	3.1	3.1

3. Cooling Capacity of Indoor Unit

• S-45MU1E51, S-45MU1E5

Power supply : 220/230/240V 1phase-50,60Hz TC : Total Cooling Capacity (kW) SHC : Sensible Heat Capacity (kW)

This data is when the indoor unit connects with 16HP outdoor unit.

RATING CAPACITY:		4.5 kW	AIR FLOW RATE: 15.0 m³/min														
EVAPORATOR			CONDENSER														
AIR INTAKE. TEMP			AMBIENT TEMP. (°C)														
W.B.	D.B.		15	17	19	21	23	25	27	29	31	33	35	37	39	41	43
14		TC	3.0	3.0	3.0	3.0	3.0	3.0	3.0	3.0	3.0	3.0	3.0	3.0	3.0	3.0	3.0
	21	SHC	2.9	2.9	2.9	2.9	2.9	2.9	2.9	2.9	2.9	2.9	2.9	2.9	2.9	2.9	2.9
	23	SHC	3.0	3.0	3.0	3.0	3.0	3.0	3.0	3.0	3.0	3.0	3.0	3.0	3.0	3.0	3.0
	25	SHC	3.0	3.0	3.0	3.0	3.0	3.0	3.0	3.0	3.0	3.0	3.0	3.0	3.0	3.0	3.0
	27	SHC	3.0	3.0	3.0	3.0	3.0	3.0	3.0	3.0	3.0	3.0	3.0	3.0	3.0	3.0	3.0
15		TC	3.3	3.3	3.3	3.3	3.3	3.3	3.3	3.3	3.3	3.3	3.3	3.3	3.3	3.3	3.3
	21	SHC	2.8	2.8	2.8	2.8	2.8	2.8	2.8	2.8	2.8	2.8	2.8	2.8	2.8	2.8	2.8
	23	SHC	3.2	3.2	3.2	3.2	3.2	3.2	3.2	3.2	3.2	3.2	3.2	3.2	3.2	3.2	3.2
	25	SHC	3.3	3.3	3.3	3.3	3.3	3.3	3.3	3.3	3.3	3.3	3.3	3.3	3.3	3.3	3.3
	27	SHC	3.3	3.3	3.3	3.3	3.3	3.3	3.3	3.3	3.3	3.3	3.3	3.3	3.3	3.3	3.3
16		TC	3.6	3.6	3.6	3.6	3.6	3.6	3.6	3.6	3.6	3.6	3.6	3.6	3.6	3.6	3.6
	21	SHC	2.6	2.6	2.6	2.6	2.6	2.6	2.6	2.6	2.6	2.6	2.6	2.6	2.6	2.6	2.6
	23	SHC	3.1	3.1	3.1	3.1	3.1	3.1	3.1	3.1	3.1	3.1	3.1	3.1	3.1	3.1	3.1
	25	SHC	3.6	3.6	3.6	3.6	3.6	3.6	3.6	3.6	3.6	3.6	3.6	3.6	3.6	3.6	3.6
	27	SHC	3.6	3.6	3.6	3.6	3.6	3.6	3.6	3.6	3.6	3.6	3.6	3.6	3.6	3.6	3.6
	29	SHC	3.6	3.6	3.6	3.6	3.6	3.6	3.6	3.6	3.6	3.6	3.6	3.6	3.6	3.6	3.6
17		TC	3.9	3.9	3.9	3.9	3.9	3.9	3.9	3.9	3.9	3.9	3.9	3.9	3.9	3.9	3.9
	21	SHC	2.4	2.4	2.4	2.4	2.4	2.4	2.4	2.4	2.4	2.4	2.4	2.4	2.4	2.4	2.4
	23	SHC	2.9	2.9	2.9	2.9	2.9	2.9	2.9	2.9	2.9	2.9	2.9	2.9	2.9	2.9	2.9
	25	SHC	3.4	3.4	3.4	3.4	3.4	3.4	3.4	3.4	3.4	3.4	3.4	3.4	3.4	3.4	3.4
	27	SHC	3.9	3.9	3.9	3.9	3.9	3.9	3.9	3.9	3.9	3.9	3.9	3.9	3.9	3.9	3.9
	29	SHC	3.9	3.9	3.9	3.9	3.9	3.9	3.9	3.9	3.9	3.9	3.9	3.9	3.9	3.9	3.9
18		TC	4.2	4.2	4.2	4.2	4.2	4.2	4.2	4.2	4.2	4.2	4.2	4.2	4.2	4.2	4.2
	21	SHC	2.3	2.3	2.3	2.3	2.3	2.3	2.3	2.3	2.3	2.3	2.3	2.3	2.3	2.3	2.3
	23	SHC	2.7	2.7	2.7	2.7	2.7	2.7	2.7	2.7	2.7	2.7	2.7	2.7	2.7	2.7	2.7
	25	SHC	3.2	3.2	3.2	3.2	3.2	3.2	3.2	3.2	3.2	3.2	3.2	3.2	3.2	3.2	3.2
	27	SHC	3.7	3.7	3.7	3.7	3.7	3.7	3.7	3.7	3.7	3.7	3.7	3.7	3.7	3.7	3.7
	29	SHC	4.2	4.2	4.2	4.2	4.2	4.2	4.2	4.2	4.2	4.2	4.2	4.2	4.2	4.2	4.2
	31	SHC	4.2	4.2	4.2	4.2	4.2	4.2	4.2	4.2	4.2	4.2	4.2	4.2	4.2	4.2	4.2
19		TC	4.5	4.5	4.5	4.5	4.5	4.5	4.5	4.5	4.5	4.5	4.5	4.5	4.5	4.5	4.5
	21	SHC	2.1	2.1	2.1	2.1	2.1	2.1	2.1	2.1	2.1	2.1	2.1	2.1	2.1	2.1	2.1
	23	SHC	2.6	2.6	2.6	2.6	2.6	2.6	2.6	2.6	2.6	2.6	2.6	2.6	2.6	2.6	2.6
	25	SHC	3.0	3.0	3.0	3.0	3.0	3.0	3.0	3.0	3.0	3.0	3.0	3.0	3.0	3.0	3.0
	27	SHC	3.5	3.5	3.5	3.5	3.5	3.5	3.5	3.5	3.5	3.5	3.5	3.5	3.5	3.5	3.5
	29	SHC	4.0	4.0	4.0	4.0	4.0	4.0	4.0	4.0	4.0	4.0	4.0	4.0	4.0	4.0	4.0
	31	SHC	4.5	4.5	4.5	4.5	4.5	4.5	4.5	4.5	4.5	4.5	4.5	4.5	4.5	4.5	4.5
20		TC	4.8	4.8	4.8	4.8	4.8	4.8	4.8	4.8	4.8	4.8	4.8	4.8	4.8	4.8	4.7
	23	SHC	2.4	2.4	2.4	2.4	2.4	2.4	2.4	2.4	2.4	2.4	2.4	2.4	2.4	2.4	2.3
	25	SHC	2.9	2.9	2.9	2.9	2.9	2.9	2.9	2.9	2.9	2.9	2.9	2.9	2.9	2.8	2.8
	27	SHC	3.3	3.3	3.3	3.3	3.3	3.3	3.3	3.3	3.3	3.3	3.3	3.3	3.3	3.3	3.3
	29	SHC	3.8	3.8	3.8	3.8	3.8	3.8	3.8	3.8	3.8	3.8	3.8	3.8	3.8	3.8	3.8
	31	SHC	4.3	4.3	4.3	4.3	4.3	4.3	4.3	4.3	4.3	4.3	4.3	4.3	4.3	4.3	4.3
21		TC	5.1	5.1	5.1	5.1	5.1	5.1	5.1	5.1	5.1	5.1	5.1	5.1	5.0	4.9	4.8
	23	SHC	2.2	2.2	2.2	2.2	2.2	2.2	2.2	2.2	2.2	2.2	2.2	2.2	2.2	2.1	2.1
	25	SHC	2.7	2.7	2.7	2.7	2.7	2.7	2.7	2.7	2.7	2.7	2.7	2.7	2.6	2.6	2.5
	27	SHC	3.1	3.1	3.1	3.1	3.1	3.1	3.1	3.1	3.1	3.1	3.1	3.1	3.1	3.1	3.0
	29	SHC	3.6	3.6	3.6	3.6	3.6	3.6	3.6	3.6	3.6	3.6	3.6	3.6	3.6	3.5	3.5
	31	SHC	4.1	4.1	4.1	4.1	4.1	4.1	4.1	4.1	4.1	4.1	4.1	4.1	4.1	4.0	4.0
22		TC	5.4	5.4	5.4	5.4	5.4	5.4	5.4	5.4	5.4	5.4	5.4	5.3	5.1	5.0	4.9
	25	SHC	2.5	2.5	2.5	2.5	2.5	2.5	2.5	2.5	2.5	2.5	2.5	2.4	2.4	2.3	2.3
	27	SHC	2.9	2.9	2.9	2.9	2.9	2.9	2.9	2.9	2.9	2.9	2.9	2.9	2.8	2.8	2.8
	29	SHC	3.4	3.4	3.4	3.4	3.4	3.4	3.4	3.4	3.4	3.4	3.4	3.4	3.3	3.3	3.2
	31	SHC	3.9	3.9	3.9	3.9	3.9	3.9	3.9	3.9	3.9	3.9	3.9	3.9	3.8	3.7	3.7
23		TC	5.7	5.7	5.7	5.7	5.7	5.7	5.7	5.7	5.7	5.7	5.5	5.4	5.2	5.1	5.0
	25	SHC	2.2	2.2	2.2	2.2	2.2	2.2	2.2	2.2	2.2	2.2	2.2	2.1	2.1	2.0	2.0
	27	SHC	2.7	2.7	2.7	2.7	2.7	2.7	2.7	2.7	2.7	2.7	2.7	2.6	2.6	2.5	2.5
	29	SHC	3.2	3.2	3.2	3.2	3.2	3.2	3.2	3.2	3.2	3.2	3.2	3.1	3.0	3.0	3.0
	31	SHC	3.7	3.7	3.7	3.7	3.7	3.7	3.7	3.7	3.7	3.7	3.6	3.6	3.5	3.5	3.4

3. Cooling Capacity of Indoor Unit

● S-56MU1E51, S-56MU1E5

Power supply : 220/230/240V 1phase-50,60Hz TC : Total Cooling Capacity (kW) SHC : Sensible Heat Capacity (kW)

This data is when the indoor unit connects with 16HP outdoor unit.

RATING CAPACITY:		5.6 kW AIR FLOW RATE:16.0 m³/min															
EVAPORATOR		CONDENSER															
AIR INTAKE. TEMP		AMBIENT TEMP. (°C)															
W.B.	D.B.		15	17	19	21	23	25	27	29	31	33	35	37	39	41	43
14		TC	3.7	3.7	3.7	3.7	3.7	3.7	3.7	3.7	3.7	3.7	3.7	3.7	3.7	3.7	3.7
	21	SHC	3.3	3.3	3.3	3.3	3.3	3.3	3.3	3.3	3.3	3.3	3.3	3.3	3.3	3.3	3.3
	23	SHC	3.7	3.7	3.7	3.7	3.7	3.7	3.7	3.7	3.7	3.7	3.7	3.7	3.7	3.7	3.7
	25	SHC	3.7	3.7	3.7	3.7	3.7	3.7	3.7	3.7	3.7	3.7	3.7	3.7	3.7	3.7	3.7
	27	SHC	3.7	3.7	3.7	3.7	3.7	3.7	3.7	3.7	3.7	3.7	3.7	3.7	3.7	3.7	3.7
15		TC	4.1	4.1	4.1	4.1	4.1	4.1	4.1	4.1	4.1	4.1	4.1	4.1	4.1	4.1	4.1
	21	SHC	3.1	3.1	3.1	3.1	3.1	3.1	3.1	3.1	3.1	3.1	3.1	3.1	3.1	3.1	3.1
	23	SHC	3.6	3.6	3.6	3.6	3.6	3.6	3.6	3.6	3.6	3.6	3.6	3.6	3.6	3.6	3.6
	25	SHC	4.1	4.1	4.1	4.1	4.1	4.1	4.1	4.1	4.1	4.1	4.1	4.1	4.1	4.1	4.1
	27	SHC	4.1	4.1	4.1	4.1	4.1	4.1	4.1	4.1	4.1	4.1	4.1	4.1	4.1	4.1	4.1
16		TC	4.5	4.5	4.5	4.5	4.5	4.5	4.5	4.5	4.5	4.5	4.5	4.5	4.5	4.5	4.5
	21	SHC	3.0	3.0	3.0	3.0	3.0	3.0	3.0	3.0	3.0	3.0	3.0	3.0	3.0	3.0	3.0
	23	SHC	3.5	3.5	3.5	3.5	3.5	3.5	3.5	3.5	3.5	3.5	3.5	3.5	3.5	3.5	3.5
	25	SHC	4.0	4.0	4.0	4.0	4.0	4.0	4.0	4.0	4.0	4.0	4.0	4.0	4.0	4.0	4.0
	27	SHC	4.4	4.4	4.4	4.4	4.4	4.4	4.4	4.4	4.4	4.4	4.4	4.4	4.4	4.4	4.4
	29	SHC	4.5	4.5	4.5	4.5	4.5	4.5	4.5	4.5	4.5	4.5	4.5	4.5	4.5	4.5	4.5
17		TC	4.9	4.9	4.9	4.9	4.9	4.9	4.9	4.9	4.9	4.9	4.9	4.9	4.9	4.9	4.9
	21	SHC	2.9	2.9	2.9	2.9	2.9	2.9	2.9	2.9	2.9	2.9	2.9	2.9	2.9	2.9	2.9
	23	SHC	3.3	3.3	3.3	3.3	3.3	3.3	3.3	3.3	3.3	3.3	3.3	3.3	3.3	3.3	3.3
	25	SHC	3.8	3.8	3.8	3.8	3.8	3.8	3.8	3.8	3.8	3.8	3.8	3.8	3.8	3.8	3.8
	27	SHC	4.3	4.3	4.3	4.3	4.3	4.3	4.3	4.3	4.3	4.3	4.3	4.3	4.3	4.3	4.3
	29	SHC	4.8	4.8	4.8	4.8	4.8	4.8	4.8	4.8	4.8	4.8	4.8	4.8	4.8	4.8	4.8
18		TC	5.2	5.2	5.2	5.2	5.2	5.2	5.2	5.2	5.2	5.2	5.2	5.2	5.2	5.2	5.2
	21	SHC	2.7	2.7	2.7	2.7	2.7	2.7	2.7	2.7	2.7	2.7	2.7	2.7	2.7	2.7	2.7
	23	SHC	3.2	3.2	3.2	3.2	3.2	3.2	3.2	3.2	3.2	3.2	3.2	3.2	3.2	3.2	3.2
	25	SHC	3.7	3.7	3.7	3.7	3.7	3.7	3.7	3.7	3.7	3.7	3.7	3.7	3.7	3.7	3.7
	27	SHC	4.1	4.1	4.1	4.1	4.1	4.1	4.1	4.1	4.1	4.1	4.1	4.1	4.1	4.1	4.1
	29	SHC	4.6	4.6	4.6	4.6	4.6	4.6	4.6	4.6	4.6	4.6	4.6	4.6	4.6	4.6	4.6
	31	SHC	5.1	5.1	5.1	5.1	5.1	5.1	5.1	5.1	5.1	5.1	5.1	5.1	5.1	5.1	5.1
19		TC	5.6	5.6	5.6	5.6	5.6	5.6	5.6	5.6	5.6	5.6	5.6	5.6	5.6	5.6	5.6
	21	SHC	2.6	2.6	2.6	2.6	2.6	2.6	2.6	2.6	2.6	2.6	2.6	2.6	2.6	2.6	2.6
	23	SHC	3.0	3.0	3.0	3.0	3.0	3.0	3.0	3.0	3.0	3.0	3.0	3.0	3.0	3.0	3.0
	25	SHC	3.5	3.5	3.5	3.5	3.5	3.5	3.5	3.5	3.5	3.5	3.5	3.5	3.5	3.5	3.5
	27	SHC	4.0	4.0	4.0	4.0	4.0	4.0	4.0	4.0	4.0	4.0	4.0	4.0	4.0	4.0	4.0
	29	SHC	4.5	4.5	4.5	4.5	4.5	4.5	4.5	4.5	4.5	4.5	4.5	4.5	4.5	4.5	4.5
	31	SHC	4.9	4.9	4.9	4.9	4.9	4.9	4.9	4.9	4.9	4.9	4.9	4.9	4.9	4.9	4.9
20		TC	6.0	6.0	6.0	6.0	6.0	6.0	6.0	6.0	6.0	6.0	6.0	6.0	6.0	5.9	5.9
	23	SHC	2.9	2.9	2.9	2.9	2.9	2.9	2.9	2.9	2.9	2.9	2.9	2.9	2.9	2.8	2.8
	25	SHC	3.3	3.3	3.3	3.3	3.3	3.3	3.3	3.3	3.3	3.3	3.3	3.3	3.3	3.3	3.3
	27	SHC	3.8	3.8	3.8	3.8	3.8	3.8	3.8	3.8	3.8	3.8	3.8	3.8	3.8	3.8	3.8
	29	SHC	4.3	4.3	4.3	4.3	4.3	4.3	4.3	4.3	4.3	4.3	4.3	4.3	4.3	4.3	4.2
	31	SHC	4.8	4.8	4.8	4.8	4.8	4.8	4.8	4.8	4.8	4.8	4.8	4.8	4.8	4.8	4.7
21		TC	6.3	6.3	6.3	6.3	6.3	6.3	6.3	6.3	6.3	6.3	6.3	6.3	6.3	6.1	6.0
	23	SHC	2.7	2.7	2.7	2.7	2.7	2.7	2.7	2.7	2.7	2.7	2.7	2.7	2.6	2.6	2.5
	25	SHC	3.2	3.2	3.2	3.2	3.2	3.2	3.2	3.2	3.2	3.2	3.2	3.2	3.1	3.0	3.0
	27	SHC	3.6	3.6	3.6	3.6	3.6	3.6	3.6	3.6	3.6	3.6	3.6	3.6	3.6	3.5	3.5
	29	SHC	4.1	4.1	4.1	4.1	4.1	4.1	4.1	4.1	4.1	4.1	4.1	4.1	4.1	4.0	4.0
	31	SHC	4.6	4.6	4.6	4.6	4.6	4.6	4.6	4.6	4.6	4.6	4.6	4.6	4.5	4.5	4.4
22		TC	6.7	6.7	6.7	6.7	6.7	6.7	6.7	6.7	6.7	6.7	6.7	6.6	6.4	6.2	6.1
	25	SHC	3.0	3.0	3.0	3.0	3.0	3.0	3.0	3.0	3.0	3.0	3.0	2.9	2.8	2.8	2.7
	27	SHC	3.4	3.4	3.4	3.4	3.4	3.4	3.4	3.4	3.4	3.4	3.4	3.4	3.3	3.2	3.2
	29	SHC	3.9	3.9	3.9	3.9	3.9	3.9	3.9	3.9	3.9	3.9	3.9	3.9	3.8	3.7	3.7
	31	SHC	4.4	4.4	4.4	4.4	4.4	4.4	4.4	4.4	4.4	4.4	4.4	4.3	4.3	4.2	4.2
23		TC	7.1	7.1	7.1	7.1	7.1	7.1	7.1	7.1	7.1	7.1	6.9	6.7	6.5	6.3	6.2
	25	SHC	2.8	2.8	2.8	2.8	2.8	2.8	2.8	2.8	2.8	2.8	2.7	2.6	2.5	2.5	2.4
	27	SHC	3.2	3.2	3.2	3.2	3.2	3.2	3.2	3.2	3.2	3.2	3.2	3.1	3.0	3.0	2.9
	29	SHC	3.7	3.7	3.7	3.7	3.7	3.7	3.7	3.7	3.7	3.7	3.6	3.6	3.5	3.4	3.4
	31	SHC	4.2	4.2	4.2	4.2	4.2	4.2	4.2	4.2	4.2	4.2	4.1	4.1	4.0	3.9	3.9

3. Cooling Capacity of Indoor Unit

• S-60MU1E51

Power supply : 220/230/240V 1phase-50,60Hz TC : Total Cooling Capacity (kW) SHC : Sensible Heat Capacity (kW)

This data is when the indoor unit connects with 16HP outdoor unit.

RATING CAPACITY:		6.0 kW AIR FLOW RATE: 21.0 m³/min															
EVAPORATOR		CONDENSER															
AIR INTAKE. TEMP		AMBIENT TEMP. (°C)															
W.B.	D.B.		15	17	19	21	23	25	27	29	31	33	35	37	39	41	43
14		TC	4.0	4.0	4.0	4.0	4.0	4.0	4.0	4.0	4.0	4.0	4.0	4.0	4.0	4.0	4.0
	21	SHC	4.0	4.0	4.0	4.0	4.0	4.0	4.0	4.0	4.0	4.0	4.0	4.0	4.0	4.0	4.0
	23	SHC	4.0	4.0	4.0	4.0	4.0	4.0	4.0	4.0	4.0	4.0	4.0	4.0	4.0	4.0	4.0
	25	SHC	4.0	4.0	4.0	4.0	4.0	4.0	4.0	4.0	4.0	4.0	4.0	4.0	4.0	4.0	4.0
	27	SHC	4.0	4.0	4.0	4.0	4.0	4.0	4.0	4.0	4.0	4.0	4.0	4.0	4.0	4.0	4.0
15		TC	4.4	4.4	4.4	4.4	4.4	4.4	4.4	4.4	4.4	4.4	4.4	4.4	4.4	4.4	4.4
	21	SHC	3.8	3.8	3.8	3.8	3.8	3.8	3.8	3.8	3.8	3.8	3.8	3.8	3.8	3.8	3.8
	23	SHC	4.4	4.4	4.4	4.4	4.4	4.4	4.4	4.4	4.4	4.4	4.4	4.4	4.4	4.4	4.4
	25	SHC	4.4	4.4	4.4	4.4	4.4	4.4	4.4	4.4	4.4	4.4	4.4	4.4	4.4	4.4	4.4
	27	SHC	4.4	4.4	4.4	4.4	4.4	4.4	4.4	4.4	4.4	4.4	4.4	4.4	4.4	4.4	4.4
16		TC	4.8	4.8	4.8	4.8	4.8	4.8	4.8	4.8	4.8	4.8	4.8	4.8	4.8	4.8	4.8
	21	SHC	3.6	3.6	3.6	3.6	3.6	3.6	3.6	3.6	3.6	3.6	3.6	3.6	3.6	3.6	3.6
	23	SHC	4.3	4.3	4.3	4.3	4.3	4.3	4.3	4.3	4.3	4.3	4.3	4.3	4.3	4.3	4.3
	25	SHC	4.8	4.8	4.8	4.8	4.8	4.8	4.8	4.8	4.8	4.8	4.8	4.8	4.8	4.8	4.8
	27	SHC	4.8	4.8	4.8	4.8	4.8	4.8	4.8	4.8	4.8	4.8	4.8	4.8	4.8	4.8	4.8
	29	SHC	4.8	4.8	4.8	4.8	4.8	4.8	4.8	4.8	4.8	4.8	4.8	4.8	4.8	4.8	4.8
17		TC	5.2	5.2	5.2	5.2	5.2	5.2	5.2	5.2	5.2	5.2	5.2	5.2	5.2	5.2	5.2
	21	SHC	3.3	3.3	3.3	3.3	3.3	3.3	3.3	3.3	3.3	3.3	3.3	3.3	3.3	3.3	3.3
	23	SHC	4.0	4.0	4.0	4.0	4.0	4.0	4.0	4.0	4.0	4.0	4.0	4.0	4.0	4.0	4.0
	25	SHC	4.7	4.7	4.7	4.7	4.7	4.7	4.7	4.7	4.7	4.7	4.7	4.7	4.7	4.7	4.7
	27	SHC	5.2	5.2	5.2	5.2	5.2	5.2	5.2	5.2	5.2	5.2	5.2	5.2	5.2	5.2	5.2
	29	SHC	5.2	5.2	5.2	5.2	5.2	5.2	5.2	5.2	5.2	5.2	5.2	5.2	5.2	5.2	5.2
18		TC	5.6	5.6	5.6	5.6	5.6	5.6	5.6	5.6	5.6	5.6	5.6	5.6	5.6	5.6	5.6
	21	SHC	3.1	3.1	3.1	3.1	3.1	3.1	3.1	3.1	3.1	3.1	3.1	3.1	3.1	3.1	3.1
	23	SHC	3.8	3.8	3.8	3.8	3.8	3.8	3.8	3.8	3.8	3.8	3.8	3.8	3.8	3.8	3.8
	25	SHC	4.5	4.5	4.5	4.5	4.5	4.5	4.5	4.5	4.5	4.5	4.5	4.5	4.5	4.5	4.5
	27	SHC	5.2	5.2	5.2	5.2	5.2	5.2	5.2	5.2	5.2	5.2	5.2	5.2	5.2	5.2	5.2
	29	SHC	5.6	5.6	5.6	5.6	5.6	5.6	5.6	5.6	5.6	5.6	5.6	5.6	5.6	5.6	5.6
	31	SHC	5.6	5.6	5.6	5.6	5.6	5.6	5.6	5.6	5.6	5.6	5.6	5.6	5.6	5.6	5.6
19		TC	6.0	6.0	6.0	6.0	6.0	6.0	6.0	6.0	6.0	6.0	6.0	6.0	6.0	6.0	6.0
	21	SHC	2.8	2.8	2.8	2.8	2.8	2.8	2.8	2.8	2.8	2.8	2.8	2.8	2.8	2.8	2.8
	23	SHC	3.5	3.5	3.5	3.5	3.5	3.5	3.5	3.5	3.5	3.5	3.5	3.5	3.5	3.5	3.5
	25	SHC	4.2	4.2	4.2	4.2	4.2	4.2	4.2	4.2	4.2	4.2	4.2	4.2	4.2	4.2	4.2
	27	SHC	4.9	4.9	4.9	4.9	4.9	4.9	4.9	4.9	4.9	4.9	4.9	4.9	4.9	4.9	4.9
	29	SHC	5.6	5.6	5.6	5.6	5.6	5.6	5.6	5.6	5.6	5.6	5.6	5.6	5.6	5.6	5.6
	31	SHC	6.0	6.0	6.0	6.0	6.0	6.0	6.0	6.0	6.0	6.0	6.0	6.0	6.0	6.0	6.0
20		TC	6.4	6.4	6.4	6.4	6.4	6.4	6.4	6.4	6.4	6.4	6.4	6.4	6.4	6.4	6.3
	23	SHC	3.2	3.2	3.2	3.2	3.2	3.2	3.2	3.2	3.2	3.2	3.2	3.2	3.2	3.2	3.2
	25	SHC	3.9	3.9	3.9	3.9	3.9	3.9	3.9	3.9	3.9	3.9	3.9	3.9	3.9	3.9	3.9
	27	SHC	4.6	4.6	4.6	4.6	4.6	4.6	4.6	4.6	4.6	4.6	4.6	4.6	4.6	4.6	4.6
	29	SHC	5.3	5.3	5.3	5.3	5.3	5.3	5.3	5.3	5.3	5.3	5.3	5.3	5.3	5.3	5.2
	31	SHC	6.0	6.0	6.0	6.0	6.0	6.0	6.0	6.0	6.0	6.0	6.0	6.0	6.0	6.0	5.9
21		TC	6.8	6.8	6.8	6.8	6.8	6.8	6.8	6.8	6.8	6.8	6.8	6.8	6.7	6.5	6.4
	23	SHC	2.9	2.9	2.9	2.9	2.9	2.9	2.9	2.9	2.9	2.9	2.9	2.9	2.9	2.8	2.8
	25	SHC	3.6	3.6	3.6	3.6	3.6	3.6	3.6	3.6	3.6	3.6	3.6	3.6	3.6	3.5	3.5
	27	SHC	4.3	4.3	4.3	4.3	4.3	4.3	4.3	4.3	4.3	4.3	4.3	4.3	4.3	4.2	4.2
	29	SHC	5.0	5.0	5.0	5.0	5.0	5.0	5.0	5.0	5.0	5.0	5.0	5.0	5.0	4.9	4.9
	31	SHC	5.7	5.7	5.7	5.7	5.7	5.7	5.7	5.7	5.7	5.7	5.7	5.7	5.7	5.6	5.6
22		TC	7.2	7.2	7.2	7.2	7.2	7.2	7.2	7.2	7.2	7.2	7.2	7.0	6.8	6.6	6.5
	25	SHC	3.3	3.3	3.3	3.3	3.3	3.3	3.3	3.3	3.3	3.3	3.3	3.3	3.2	3.1	3.1
	27	SHC	4.0	4.0	4.0	4.0	4.0	4.0	4.0	4.0	4.0	4.0	4.0	4.0	3.9	3.8	3.8
	29	SHC	4.7	4.7	4.7	4.7	4.7	4.7	4.7	4.7	4.7	4.7	4.7	4.7	4.6	4.5	4.5
	31	SHC	5.4	5.4	5.4	5.4	5.4	5.4	5.4	5.4	5.4	5.4	5.4	5.3	5.3	5.2	5.2
23		TC	7.6	7.6	7.6	7.6	7.6	7.6	7.6	7.6	7.6	7.6	7.4	7.2	7.0	6.8	6.7
	25	SHC	3.0	3.0	3.0	3.0	3.0	3.0	3.0	3.0	3.0	3.0	3.0	2.9	2.8	2.7	2.7
	27	SHC	3.7	3.7	3.7	3.7	3.7	3.7	3.7	3.7	3.7	3.7	3.6	3.6	3.5	3.4	3.4
	29	SHC	4.4	4.4	4.4	4.4	4.4	4.4	4.4	4.4	4.4	4.4	4.3	4.3	4.2	4.1	4.1
	31	SHC	5.1	5.1	5.1	5.1	5.1	5.1	5.1	5.1	5.1	5.1	5.0	5.0	4.9	4.8	4.8

3. Cooling Capacity of Indoor Unit

- S-73MU1E51, S-73MU1E5

Power supply : 220/230/240V 1phase-50,60Hz TC : Total Cooling Capacity (kW) SHC : Sensible Heat Capacity (kW)
This data is when the indoor unit connects with 16HP outdoor unit.

RATING CAPACITY:		7.3 kW	AIR FLOW RATE: 22.0 m³/min														
EVAPORATOR			CONDENSER														
AIR INTAKE. TEMP			AMBIENT TEMP. (°C)														
W.B.	D.B.		15	17	19	21	23	25	27	29	31	33	35	37	39	41	43
14		TC	4.9	4.9	4.9	4.9	4.9	4.9	4.9	4.9	4.9	4.9	4.9	4.9	4.9	4.9	4.9
	21	SHC	4.5	4.5	4.5	4.5	4.5	4.5	4.5	4.5	4.5	4.5	4.5	4.5	4.5	4.5	4.5
	23	SHC	4.9	4.9	4.9	4.9	4.9	4.9	4.9	4.9	4.9	4.9	4.9	4.9	4.9	4.9	4.9
	25	SHC	4.9	4.9	4.9	4.9	4.9	4.9	4.9	4.9	4.9	4.9	4.9	4.9	4.9	4.9	4.9
	27	SHC	4.9	4.9	4.9	4.9	4.9	4.9	4.9	4.9	4.9	4.9	4.9	4.9	4.9	4.9	4.9
15		TC	5.4	5.4	5.4	5.4	5.4	5.4	5.4	5.4	5.4	5.4	5.4	5.4	5.4	5.4	5.4
	21	SHC	4.3	4.3	4.3	4.3	4.3	4.3	4.3	4.3	4.3	4.3	4.3	4.3	4.3	4.3	4.3
	23	SHC	5.0	5.0	5.0	5.0	5.0	5.0	5.0	5.0	5.0	5.0	5.0	5.0	5.0	5.0	5.0
	25	SHC	5.4	5.4	5.4	5.4	5.4	5.4	5.4	5.4	5.4	5.4	5.4	5.4	5.4	5.4	5.4
	27	SHC	5.4	5.4	5.4	5.4	5.4	5.4	5.4	5.4	5.4	5.4	5.4	5.4	5.4	5.4	5.4
16		TC	5.8	5.8	5.8	5.8	5.8	5.8	5.8	5.8	5.8	5.8	5.8	5.8	5.8	5.8	5.8
	21	SHC	4.1	4.1	4.1	4.1	4.1	4.1	4.1	4.1	4.1	4.1	4.1	4.1	4.1	4.1	4.1
	23	SHC	4.8	4.8	4.8	4.8	4.8	4.8	4.8	4.8	4.8	4.8	4.8	4.8	4.8	4.8	4.8
	25	SHC	5.5	5.5	5.5	5.5	5.5	5.5	5.5	5.5	5.5	5.5	5.5	5.5	5.5	5.5	5.5
	27	SHC	5.8	5.8	5.8	5.8	5.8	5.8	5.8	5.8	5.8	5.8	5.8	5.8	5.8	5.8	5.8
	29	SHC	5.8	5.8	5.8	5.8	5.8	5.8	5.8	5.8	5.8	5.8	5.8	5.8	5.8	5.8	5.8
17		TC	6.3	6.3	6.3	6.3	6.3	6.3	6.3	6.3	6.3	6.3	6.3	6.3	6.3	6.3	6.3
	21	SHC	3.9	3.9	3.9	3.9	3.9	3.9	3.9	3.9	3.9	3.9	3.9	3.9	3.9	3.9	3.9
	23	SHC	4.6	4.6	4.6	4.6	4.6	4.6	4.6	4.6	4.6	4.6	4.6	4.6	4.6	4.6	4.6
	25	SHC	5.3	5.3	5.3	5.3	5.3	5.3	5.3	5.3	5.3	5.3	5.3	5.3	5.3	5.3	5.3
	27	SHC	6.0	6.0	6.0	6.0	6.0	6.0	6.0	6.0	6.0	6.0	6.0	6.0	6.0	6.0	6.0
	29	SHC	6.3	6.3	6.3	6.3	6.3	6.3	6.3	6.3	6.3	6.3	6.3	6.3	6.3	6.3	6.3
18		TC	6.8	6.8	6.8	6.8	6.8	6.8	6.8	6.8	6.8	6.8	6.8	6.8	6.8	6.8	6.8
	21	SHC	3.6	3.6	3.6	3.6	3.6	3.6	3.6	3.6	3.6	3.6	3.6	3.6	3.6	3.6	3.6
	23	SHC	4.3	4.3	4.3	4.3	4.3	4.3	4.3	4.3	4.3	4.3	4.3	4.3	4.3	4.3	4.3
	25	SHC	5.0	5.0	5.0	5.0	5.0	5.0	5.0	5.0	5.0	5.0	5.0	5.0	5.0	5.0	5.0
	27	SHC	5.7	5.7	5.7	5.7	5.7	5.7	5.7	5.7	5.7	5.7	5.7	5.7	5.7	5.7	5.7
	29	SHC	6.4	6.4	6.4	6.4	6.4	6.4	6.4	6.4	6.4	6.4	6.4	6.4	6.4	6.4	6.4
	31	SHC	6.8	6.8	6.8	6.8	6.8	6.8	6.8	6.8	6.8	6.8	6.8	6.8	6.8	6.8	6.8
19		TC	7.3	7.3	7.3	7.3	7.3	7.3	7.3	7.3	7.3	7.3	7.3	7.3	7.3	7.3	7.3
	21	SHC	3.4	3.4	3.4	3.4	3.4	3.4	3.4	3.4	3.4	3.4	3.4	3.4	3.4	3.4	3.4
	23	SHC	4.1	4.1	4.1	4.1	4.1	4.1	4.1	4.1	4.1	4.1	4.1	4.1	4.1	4.1	4.1
	25	SHC	4.8	4.8	4.8	4.8	4.8	4.8	4.8	4.8	4.8	4.8	4.8	4.8	4.8	4.8	4.8
	27	SHC	5.5	5.5	5.5	5.5	5.5	5.5	5.5	5.5	5.5	5.5	5.5	5.5	5.5	5.5	5.5
	29	SHC	6.2	6.2	6.2	6.2	6.2	6.2	6.2	6.2	6.2	6.2	6.2	6.2	6.2	6.2	6.2
	31	SHC	6.9	6.9	6.9	6.9	6.9	6.9	6.9	6.9	6.9	6.9	6.9	6.9	6.9	6.9	6.9
20		TC	7.8	7.8	7.8	7.8	7.8	7.8	7.8	7.8	7.8	7.8	7.8	7.8	7.8	7.8	7.6
	23	SHC	3.8	3.8	3.8	3.8	3.8	3.8	3.8	3.8	3.8	3.8	3.8	3.8	3.8	3.8	3.7
	25	SHC	4.5	4.5	4.5	4.5	4.5	4.5	4.5	4.5	4.5	4.5	4.5	4.5	4.5	4.5	4.4
	27	SHC	5.2	5.2	5.2	5.2	5.2	5.2	5.2	5.2	5.2	5.2	5.2	5.2	5.2	5.2	5.1
	29	SHC	5.9	5.9	5.9	5.9	5.9	5.9	5.9	5.9	5.9	5.9	5.9	5.9	5.9	5.9	5.8
	31	SHC	6.6	6.6	6.6	6.6	6.6	6.6	6.6	6.6	6.6	6.6	6.6	6.6	6.6	6.6	6.6
21		TC	8.3	8.3	8.3	8.3	8.3	8.3	8.3	8.3	8.3	8.3	8.3	8.3	8.2	7.9	7.8
	23	SHC	3.5	3.5	3.5	3.5	3.5	3.5	3.5	3.5	3.5	3.5	3.5	3.5	3.5	3.4	3.3
	25	SHC	4.2	4.2	4.2	4.2	4.2	4.2	4.2	4.2	4.2	4.2	4.2	4.2	4.2	4.1	4.0
	27	SHC	4.9	4.9	4.9	4.9	4.9	4.9	4.9	4.9	4.9	4.9	4.9	4.9	4.9	4.8	4.7
	29	SHC	5.6	5.6	5.6	5.6	5.6	5.6	5.6	5.6	5.6	5.6	5.6	5.6	5.6	5.5	5.4
	31	SHC	6.3	6.3	6.3	6.3	6.3	6.3	6.3	6.3	6.3	6.3	6.3	6.3	6.3	6.2	6.2
22		TC	8.8	8.8	8.8	8.8	8.8	8.8	8.8	8.8	8.8	8.8	8.8	8.6	8.3	8.1	8.0
	25	SHC	3.9	3.9	3.9	3.9	3.9	3.9	3.9	3.9	3.9	3.9	3.9	3.8	3.8	3.7	3.6
	27	SHC	4.6	4.6	4.6	4.6	4.6	4.6	4.6	4.6	4.6	4.6	4.6	4.6	4.5	4.4	4.3
	29	SHC	5.3	5.3	5.3	5.3	5.3	5.3	5.3	5.3	5.3	5.3	5.3	5.3	5.2	5.1	5.1
	31	SHC	6.1	6.1	6.1	6.1	6.1	6.1	6.1	6.1	6.1	6.1	6.1	6.0	5.9	5.8	5.8
23		TC	9.2	9.2	9.2	9.2	9.2	9.2	9.2	9.2	9.2	9.2	9.0	8.7	8.5	8.2	8.1
	25	SHC	3.6	3.6	3.6	3.6	3.6	3.6	3.6	3.6	3.6	3.6	3.5	3.4	3.3	3.3	3.2
	27	SHC	4.3	4.3	4.3	4.3	4.3	4.3	4.3	4.3	4.3	4.3	4.2	4.1	4.1	4.0	3.9
	29	SHC	5.0	5.0	5.0	5.0	5.0	5.0	5.0	5.0	5.0	5.0	5.0	4.9	4.8	4.7	4.6
	31	SHC	5.8	5.8	5.8	5.8	5.8	5.8	5.8	5.8	5.8	5.8	5.7	5.6	5.5	5.4	5.3

3. Cooling Capacity of Indoor Unit

• S-90MU1E51

Power supply : 220/230/240V 1phase-50,60Hz TC : Total Cooling Capacity (kW) SHC : Sensible Heat Capacity (kW)

This data is when the indoor unit connects with 16HP outdoor unit.

RATING CAPACITY:		9.0 kW AIR FLOW RATE: 23.0 m³/min																
EVAPORATOR		CONDENSER																
AIR INTAKE. TEMP		AMBIENT TEMP. (°C)																
W.B.	D.B.		15	17	19	21	23	25	27	29	31	33	35	37	39	41	43
14		TC	6.0	6.0	6.0	6.0	6.0	6.0	6.0	6.0	6.0	6.0	6.0	6.0	6.0	6.0	6.0
	21	SHC	5.0	5.0	5.0	5.0	5.0	5.0	5.0	5.0	5.0	5.0	5.0	5.0	5.0	5.0	5.0
	23	SHC	5.7	5.7	5.7	5.7	5.7	5.7	5.7	5.7	5.7	5.7	5.7	5.7	5.7	5.7	5.7
	25	SHC	6.0	6.0	6.0	6.0	6.0	6.0	6.0	6.0	6.0	6.0	6.0	6.0	6.0	6.0	6.0
	27	SHC	6.0	6.0	6.0	6.0	6.0	6.0	6.0	6.0	6.0	6.0	6.0	6.0	6.0	6.0	6.0
15		TC	6.6	6.6	6.6	6.6	6.6	6.6	6.6	6.6	6.6	6.6	6.6	6.6	6.6	6.6	6.6
	21	SHC	4.9	4.9	4.9	4.9	4.9	4.9	4.9	4.9	4.9	4.9	4.9	4.9	4.9	4.9	4.9
	23	SHC	5.6	5.6	5.6	5.6	5.6	5.6	5.6	5.6	5.6	5.6	5.6	5.6	5.6	5.6	5.6
	25	SHC	6.3	6.3	6.3	6.3	6.3	6.3	6.3	6.3	6.3	6.3	6.3	6.3	6.3	6.3	6.3
	27	SHC	6.6	6.6	6.6	6.6	6.6	6.6	6.6	6.6	6.6	6.6	6.6	6.6	6.6	6.6	6.6
16		TC	7.2	7.2	7.2	7.2	7.2	7.2	7.2	7.2	7.2	7.2	7.2	7.2	7.2	7.2	7.2
	21	SHC	4.7	4.7	4.7	4.7	4.7	4.7	4.7	4.7	4.7	4.7	4.7	4.7	4.7	4.7	4.7
	23	SHC	5.4	5.4	5.4	5.4	5.4	5.4	5.4	5.4	5.4	5.4	5.4	5.4	5.4	5.4	5.4
	25	SHC	6.1	6.1	6.1	6.1	6.1	6.1	6.1	6.1	6.1	6.1	6.1	6.1	6.1	6.1	6.1
	27	SHC	6.8	6.8	6.8	6.8	6.8	6.8	6.8	6.8	6.8	6.8	6.8	6.8	6.8	6.8	6.8
	29	SHC	7.2	7.2	7.2	7.2	7.2	7.2	7.2	7.2	7.2	7.2	7.2	7.2	7.2	7.2	7.2
17		TC	7.8	7.8	7.8	7.8	7.8	7.8	7.8	7.8	7.8	7.8	7.8	7.8	7.8	7.8	7.8
	21	SHC	4.5	4.5	4.5	4.5	4.5	4.5	4.5	4.5	4.5	4.5	4.5	4.5	4.5	4.5	4.5
	23	SHC	5.2	5.2	5.2	5.2	5.2	5.2	5.2	5.2	5.2	5.2	5.2	5.2	5.2	5.2	5.2
	25	SHC	5.9	5.9	5.9	5.9	5.9	5.9	5.9	5.9	5.9	5.9	5.9	5.9	5.9	5.9	5.9
	27	SHC	6.6	6.6	6.6	6.6	6.6	6.6	6.6	6.6	6.6	6.6	6.6	6.6	6.6	6.6	6.6
	29	SHC	7.3	7.3	7.3	7.3	7.3	7.3	7.3	7.3	7.3	7.3	7.3	7.3	7.3	7.3	7.3
18		TC	8.4	8.4	8.4	8.4	8.4	8.4	8.4	8.4	8.4	8.4	8.4	8.4	8.4	8.4	8.4
	21	SHC	4.3	4.3	4.3	4.3	4.3	4.3	4.3	4.3	4.3	4.3	4.3	4.3	4.3	4.3	4.3
	23	SHC	5.0	5.0	5.0	5.0	5.0	5.0	5.0	5.0	5.0	5.0	5.0	5.0	5.0	5.0	5.0
	25	SHC	5.7	5.7	5.7	5.7	5.7	5.7	5.7	5.7	5.7	5.7	5.7	5.7	5.7	5.7	5.7
	27	SHC	6.4	6.4	6.4	6.4	6.4	6.4	6.4	6.4	6.4	6.4	6.4	6.4	6.4	6.4	6.4
	29	SHC	7.1	7.1	7.1	7.1	7.1	7.1	7.1	7.1	7.1	7.1	7.1	7.1	7.1	7.1	7.1
	31	SHC	7.8	7.8	7.8	7.8	7.8	7.8	7.8	7.8	7.8	7.8	7.8	7.8	7.8	7.8	7.8
19		TC	9.0	9.0	9.0	9.0	9.0	9.0	9.0	9.0	9.0	9.0	9.0	9.0	9.0	9.0	9.0
	21	SHC	4.1	4.1	4.1	4.1	4.1	4.1	4.1	4.1	4.1	4.1	4.1	4.1	4.1	4.1	4.1
	23	SHC	4.8	4.8	4.8	4.8	4.8	4.8	4.8	4.8	4.8	4.8	4.8	4.8	4.8	4.8	4.8
	25	SHC	5.5	5.5	5.5	5.5	5.5	5.5	5.5	5.5	5.5	5.5	5.5	5.5	5.5	5.5	5.5
	27	SHC	6.2	6.2	6.2	6.2	6.2	6.2	6.2	6.2	6.2	6.2	6.2	6.2	6.2	6.2	6.2
	29	SHC	6.9	6.9	6.9	6.9	6.9	6.9	6.9	6.9	6.9	6.9	6.9	6.9	6.9	6.9	6.9
	31	SHC	7.6	7.6	7.6	7.6	7.6	7.6	7.6	7.6	7.6	7.6	7.6	7.6	7.6	7.6	7.6
20		TC	9.6	9.6	9.6	9.6	9.6	9.6	9.6	9.6	9.6	9.6	9.6	9.6	9.6	9.6	9.4
	23	SHC	4.6	4.6	4.6	4.6	4.6	4.6	4.6	4.6	4.6	4.6	4.6	4.6	4.6	4.5	4.5
	25	SHC	5.2	5.2	5.2	5.2	5.2	5.2	5.2	5.2	5.2	5.2	5.2	5.2	5.2	5.2	5.2
	27	SHC	5.9	5.9	5.9	5.9	5.9	5.9	5.9	5.9	5.9	5.9	5.9	5.9	5.9	5.9	5.9
	29	SHC	6.6	6.6	6.6	6.6	6.6	6.6	6.6	6.6	6.6	6.6	6.6	6.6	6.6	6.6	6.6
	31	SHC	7.3	7.3	7.3	7.3	7.3	7.3	7.3	7.3	7.3	7.3	7.3	7.3	7.3	7.3	7.3
21		TC	10.2	10.2	10.2	10.2	10.2	10.2	10.2	10.2	10.2	10.2	10.2	10.2	10.1	9.8	9.6
	23	SHC	4.3	4.3	4.3	4.3	4.3	4.3	4.3	4.3	4.3	4.3	4.3	4.3	4.2	4.1	4.0
	25	SHC	5.0	5.0	5.0	5.0	5.0	5.0	5.0	5.0	5.0	5.0	5.0	5.0	4.9	4.8	4.7
	27	SHC	5.7	5.7	5.7	5.7	5.7	5.7	5.7	5.7	5.7	5.7	5.7	5.7	5.6	5.5	5.4
	29	SHC	6.4	6.4	6.4	6.4	6.4	6.4	6.4	6.4	6.4	6.4	6.4	6.4	6.3	6.2	6.1
	31	SHC	7.1	7.1	7.1	7.1	7.1	7.1	7.1	7.1	7.1	7.1	7.1	7.1	7.0	6.9	6.9
22		TC	10.8	10.8	10.8	10.8	10.8	10.8	10.8	10.8	10.8	10.8	10.8	10.6	10.3	10.0	9.8
	25	SHC	4.7	4.7	4.7	4.7	4.7	4.7	4.7	4.7	4.7	4.7	4.7	4.6	4.5	4.4	4.3
	27	SHC	5.4	5.4	5.4	5.4	5.4	5.4	5.4	5.4	5.4	5.4	5.4	5.3	5.2	5.1	5.0
	29	SHC	6.1	6.1	6.1	6.1	6.1	6.1	6.1	6.1	6.1	6.1	6.1	6.0	5.9	5.8	5.7
	31	SHC	6.8	6.8	6.8	6.8	6.8	6.8	6.8	6.8	6.8	6.8	6.8	6.7	6.6	6.5	6.4
23		TC	11.4	11.4	11.4	11.4	11.4	11.4	11.4	11.4	11.4	11.4	11.1	10.8	10.5	10.2	10.0
	25	SHC	4.4	4.4	4.4	4.4	4.4	4.4	4.4	4.4	4.4	4.4	4.3	4.2	4.1	4.0	3.9
	27	SHC	5.2	5.2	5.2	5.2	5.2	5.2	5.2	5.2	5.2	5.2	5.0	4.9	4.8	4.7	4.6
	29	SHC	5.9	5.9	5.9	5.9	5.9	5.9	5.9	5.9	5.9	5.9	5.7	5.6	5.5	5.4	5.3
	31	SHC	6.6	6.6	6.6	6.6	6.6	6.6	6.6	6.6	6.6	6.6	6.4	6.3	6.2	6.1	6.0

3. Cooling Capacity of Indoor Unit

● S-106MU1E51, S-106MU1E5

Power supply : 220/230/240V 1phase-50,60Hz TC : Total Cooling Capacity (kW) SHC : Sensible Heat Capacity (kW)

This data is when the indoor unit connects with 16HP outdoor unit.

RATING CAPACITY:		10.6 kW	AIR FLOW RATE:33.0 m³/min														
EVAPORATOR			CONDENSER														
AIR INTAKE. TEMP			AMBIENT TEMP. (°C)														
W.B.	D.B.		15	17	19	21	23	25	27	29	31	33	35	37	39	41	43
14		TC	7.1	7.1	7.1	7.1	7.1	7.1	7.1	7.1	7.1	7.1	7.1	7.1	7.1	7.1	7.1
	21	SHC	6.6	6.6	6.6	6.6	6.6	6.6	6.6	6.6	6.6	6.6	6.6	6.6	6.6	6.6	6.6
	23	SHC	7.1	7.1	7.1	7.1	7.1	7.1	7.1	7.1	7.1	7.1	7.1	7.1	7.1	7.1	7.1
	25	SHC	7.1	7.1	7.1	7.1	7.1	7.1	7.1	7.1	7.1	7.1	7.1	7.1	7.1	7.1	7.1
	27	SHC	7.1	7.1	7.1	7.1	7.1	7.1	7.1	7.1	7.1	7.1	7.1	7.1	7.1	7.1	7.1
15		TC	7.8	7.8	7.8	7.8	7.8	7.8	7.8	7.8	7.8	7.8	7.8	7.8	7.8	7.8	7.8
	21	SHC	6.2	6.2	6.2	6.2	6.2	6.2	6.2	6.2	6.2	6.2	6.2	6.2	6.2	6.2	6.2
	23	SHC	7.3	7.3	7.3	7.3	7.3	7.3	7.3	7.3	7.3	7.3	7.3	7.3	7.3	7.3	7.3
	25	SHC	7.8	7.8	7.8	7.8	7.8	7.8	7.8	7.8	7.8	7.8	7.8	7.8	7.8	7.8	7.8
	27	SHC	7.8	7.8	7.8	7.8	7.8	7.8	7.8	7.8	7.8	7.8	7.8	7.8	7.8	7.8	7.8
16		TC	8.5	8.5	8.5	8.5	8.5	8.5	8.5	8.5	8.5	8.5	8.5	8.5	8.5	8.5	8.5
	21	SHC	5.9	5.9	5.9	5.9	5.9	5.9	5.9	5.9	5.9	5.9	5.9	5.9	5.9	5.9	5.9
	23	SHC	6.9	6.9	6.9	6.9	6.9	6.9	6.9	6.9	6.9	6.9	6.9	6.9	6.9	6.9	6.9
	25	SHC	8.0	8.0	8.0	8.0	8.0	8.0	8.0	8.0	8.0	8.0	8.0	8.0	8.0	8.0	8.0
	27	SHC	8.5	8.5	8.5	8.5	8.5	8.5	8.5	8.5	8.5	8.5	8.5	8.5	8.5	8.5	8.5
	29	SHC	8.5	8.5	8.5	8.5	8.5	8.5	8.5	8.5	8.5	8.5	8.5	8.5	8.5	8.5	8.5
17		TC	9.2	9.2	9.2	9.2	9.2	9.2	9.2	9.2	9.2	9.2	9.2	9.2	9.2	9.2	9.2
	21	SHC	5.6	5.6	5.6	5.6	5.6	5.6	5.6	5.6	5.6	5.6	5.6	5.6	5.6	5.6	5.6
	23	SHC	6.6	6.6	6.6	6.6	6.6	6.6	6.6	6.6	6.6	6.6	6.6	6.6	6.6	6.6	6.6
	25	SHC	7.6	7.6	7.6	7.6	7.6	7.6	7.6	7.6	7.6	7.6	7.6	7.6	7.6	7.6	7.6
	27	SHC	8.7	8.7	8.7	8.7	8.7	8.7	8.7	8.7	8.7	8.7	8.7	8.7	8.7	8.7	8.7
	29	SHC	9.2	9.2	9.2	9.2	9.2	9.2	9.2	9.2	9.2	9.2	9.2	9.2	9.2	9.2	9.2
18		TC	9.9	9.9	9.9	9.9	9.9	9.9	9.9	9.9	9.9	9.9	9.9	9.9	9.9	9.9	9.9
	21	SHC	5.2	5.2	5.2	5.2	5.2	5.2	5.2	5.2	5.2	5.2	5.2	5.2	5.2	5.2	5.2
	23	SHC	6.3	6.3	6.3	6.3	6.3	6.3	6.3	6.3	6.3	6.3	6.3	6.3	6.3	6.3	6.3
	25	SHC	7.3	7.3	7.3	7.3	7.3	7.3	7.3	7.3	7.3	7.3	7.3	7.3	7.3	7.3	7.3
	27	SHC	8.3	8.3	8.3	8.3	8.3	8.3	8.3	8.3	8.3	8.3	8.3	8.3	8.3	8.3	8.3
	29	SHC	9.3	9.3	9.3	9.3	9.3	9.3	9.3	9.3	9.3	9.3	9.3	9.3	9.3	9.3	9.3
	31	SHC	9.9	9.9	9.9	9.9	9.9	9.9	9.9	9.9	9.9	9.9	9.9	9.9	9.9	9.9	9.9
19		TC	10.6	10.6	10.6	10.6	10.6	10.6	10.6	10.6	10.6	10.6	10.6	10.6	10.6	10.6	10.6
	21	SHC	4.9	4.9	4.9	4.9	4.9	4.9	4.9	4.9	4.9	4.9	4.9	4.9	4.9	4.9	4.9
	23	SHC	5.9	5.9	5.9	5.9	5.9	5.9	5.9	5.9	5.9	5.9	5.9	5.9	5.9	5.9	5.9
	25	SHC	6.9	6.9	6.9	6.9	6.9	6.9	6.9	6.9	6.9	6.9	6.9	6.9	6.9	6.9	6.9
	27	SHC	7.9	7.9	7.9	7.9	7.9	7.9	7.9	7.9	7.9	7.9	7.9	7.9	7.9	7.9	7.9
	29	SHC	9.0	9.0	9.0	9.0	9.0	9.0	9.0	9.0	9.0	9.0	9.0	9.0	9.0	9.0	9.0
	31	SHC	10.0	10.0	10.0	10.0	10.0	10.0	10.0	10.0	10.0	10.0	10.0	10.0	10.0	10.0	10.0
20		TC	11.3	11.3	11.3	11.3	11.3	11.3	11.3	11.3	11.3	11.3	11.3	11.3	11.3	11.3	11.1
	23	SHC	5.5	5.5	5.5	5.5	5.5	5.5	5.5	5.5	5.5	5.5	5.5	5.5	5.5	5.5	5.4
	25	SHC	6.5	6.5	6.5	6.5	6.5	6.5	6.5	6.5	6.5	6.5	6.5	6.5	6.5	6.5	6.4
	27	SHC	7.5	7.5	7.5	7.5	7.5	7.5	7.5	7.5	7.5	7.5	7.5	7.5	7.5	7.5	7.5
	29	SHC	8.6	8.6	8.6	8.6	8.6	8.6	8.6	8.6	8.6	8.6	8.6	8.6	8.6	8.6	8.5
	31	SHC	9.6	9.6	9.6	9.6	9.6	9.6	9.6	9.6	9.6	9.6	9.6	9.6	9.6	9.6	9.5
21		TC	12.0	12.0	12.0	12.0	12.0	12.0	12.0	12.0	12.0	12.0	12.0	12.0	11.8	11.5	11.3
	23	SHC	5.1	5.1	5.1	5.1	5.1	5.1	5.1	5.1	5.1	5.1	5.1	5.1	5.0	4.9	4.8
	25	SHC	6.1	6.1	6.1	6.1	6.1	6.1	6.1	6.1	6.1	6.1	6.1	6.1	6.1	5.9	5.9
	27	SHC	7.2	7.2	7.2	7.2	7.2	7.2	7.2	7.2	7.2	7.2	7.2	7.2	7.1	6.9	6.9
	29	SHC	8.2	8.2	8.2	8.2	8.2	8.2	8.2	8.2	8.2	8.2	8.2	8.2	8.1	8.0	7.9
	31	SHC	9.2	9.2	9.2	9.2	9.2	9.2	9.2	9.2	9.2	9.2	9.2	9.2	9.1	9.0	8.9
22		TC	12.7	12.7	12.7	12.7	12.7	12.7	12.7	12.7	12.7	12.7	12.7	12.4	12.1	11.7	11.6
	25	SHC	5.7	5.7	5.7	5.7	5.7	5.7	5.7	5.7	5.7	5.7	5.7	5.6	5.5	5.3	5.3
	27	SHC	6.7	6.7	6.7	6.7	6.7	6.7	6.7	6.7	6.7	6.7	6.7	6.6	6.5	6.3	6.3
	29	SHC	7.8	7.8	7.8	7.8	7.8	7.8	7.8	7.8	7.8	7.8	7.8	7.6	7.5	7.4	7.3
	31	SHC	8.8	8.8	8.8	8.8	8.8	8.8	8.8	8.8	8.8	8.8	8.8	8.7	8.5	8.4	8.3
23		TC	13.4	13.4	13.4	13.4	13.4	13.4	13.4	13.4	13.4	13.4	13.1	12.7	12.3	12.0	11.8
	25	SHC	5.3	5.3	5.3	5.3	5.3	5.3	5.3	5.3	5.3	5.3	5.1	5.0	4.9	4.7	4.7
	27	SHC	6.3	6.3	6.3	6.3	6.3	6.3	6.3	6.3	6.3	6.3	6.2	6.0	5.9	5.8	5.7
	29	SHC	7.3	7.3	7.3	7.3	7.3	7.3	7.3	7.3	7.3	7.3	7.2	7.1	6.9	6.8	6.7
	31	SHC	8.3	8.3	8.3	8.3	8.3	8.3	8.3	8.3	8.3	8.3	8.2	8.1	7.9	7.8	7.8

3. Cooling Capacity of Indoor Unit

• S-140MU1E51, S-140MU1E5

Power supply : 220/230/240V 1phase-50,60Hz TC : Total Cooling Capacity (kW) SHC : Sensible Heat Capacity (kW)

This data is when the indoor unit connects with 16HP outdoor unit.

RATING CAPACITY:		14.0 kW AIR FLOW RATE: 35.0 m³/min																
EVAPORATOR		CONDENSER																
AIR INTAKE. TEMP		AMBIENT TEMP. (°C)																
W.B.	D.B.		15	17	19	21	23	25	27	29	31	33	35	37	39	41	43
14		TC	9.3	9.3	9.3	9.3	9.3	9.3	9.3	9.3	9.3	9.3	9.3	9.3	9.3	9.3	9.3
	21	SHC	7.7	7.7	7.7	7.7	7.7	7.7	7.7	7.7	7.7	7.7	7.7	7.7	7.7	7.7	7.7
	23	SHC	8.8	8.8	8.8	8.8	8.8	8.8	8.8	8.8	8.8	8.8	8.8	8.8	8.8	8.8	8.8
	25	SHC	9.3	9.3	9.3	9.3	9.3	9.3	9.3	9.3	9.3	9.3	9.3	9.3	9.3	9.3	9.3
	27	SHC	9.3	9.3	9.3	9.3	9.3	9.3	9.3	9.3	9.3	9.3	9.3	9.3	9.3	9.3	9.3
15		TC	10.3	10.3	10.3	10.3	10.3	10.3	10.3	10.3	10.3	10.3	10.3	10.3	10.3	10.3	10.3
	21	SHC	7.5	7.5	7.5	7.5	7.5	7.5	7.5	7.5	7.5	7.5	7.5	7.5	7.5	7.5	7.5
	23	SHC	8.5	8.5	8.5	8.5	8.5	8.5	8.5	8.5	8.5	8.5	8.5	8.5	8.5	8.5	8.5
	25	SHC	9.6	9.6	9.6	9.6	9.6	9.6	9.6	9.6	9.6	9.6	9.6	9.6	9.6	9.6	9.6
	27	SHC	10.3	10.3	10.3	10.3	10.3	10.3	10.3	10.3	10.3	10.3	10.3	10.3	10.3	10.3	10.3
16		TC	11.2	11.2	11.2	11.2	11.2	11.2	11.2	11.2	11.2	11.2	11.2	11.2	11.2	11.2	11.2
	21	SHC	7.2	7.2	7.2	7.2	7.2	7.2	7.2	7.2	7.2	7.2	7.2	7.2	7.2	7.2	7.2
	23	SHC	8.3	8.3	8.3	8.3	8.3	8.3	8.3	8.3	8.3	8.3	8.3	8.3	8.3	8.3	8.3
	25	SHC	9.3	9.3	9.3	9.3	9.3	9.3	9.3	9.3	9.3	9.3	9.3	9.3	9.3	9.3	9.3
	27	SHC	10.4	10.4	10.4	10.4	10.4	10.4	10.4	10.4	10.4	10.4	10.4	10.4	10.4	10.4	10.4
	29	SHC	11.2	11.2	11.2	11.2	11.2	11.2	11.2	11.2	11.2	11.2	11.2	11.2	11.2	11.2	11.2
17		TC	12.1	12.1	12.1	12.1	12.1	12.1	12.1	12.1	12.1	12.1	12.1	12.1	12.1	12.1	12.1
	21	SHC	7.0	7.0	7.0	7.0	7.0	7.0	7.0	7.0	7.0	7.0	7.0	7.0	7.0	7.0	7.0
	23	SHC	8.0	8.0	8.0	8.0	8.0	8.0	8.0	8.0	8.0	8.0	8.0	8.0	8.0	8.0	8.0
	25	SHC	9.1	9.1	9.1	9.1	9.1	9.1	9.1	9.1	9.1	9.1	9.1	9.1	9.1	9.1	9.1
	27	SHC	10.1	10.1	10.1	10.1	10.1	10.1	10.1	10.1	10.1	10.1	10.1	10.1	10.1	10.1	10.1
	29	SHC	11.1	11.1	11.1	11.1	11.1	11.1	11.1	11.1	11.1	11.1	11.1	11.1	11.1	11.1	11.1
18		TC	13.1	13.1	13.1	13.1	13.1	13.1	13.1	13.1	13.1	13.1	13.1	13.1	13.1	13.1	13.1
	21	SHC	6.7	6.7	6.7	6.7	6.7	6.7	6.7	6.7	6.7	6.7	6.7	6.7	6.7	6.7	6.7
	23	SHC	7.7	7.7	7.7	7.7	7.7	7.7	7.7	7.7	7.7	7.7	7.7	7.7	7.7	7.7	7.7
	25	SHC	8.7	8.7	8.7	8.7	8.7	8.7	8.7	8.7	8.7	8.7	8.7	8.7	8.7	8.7	8.7
	27	SHC	9.8	9.8	9.8	9.8	9.8	9.8	9.8	9.8	9.8	9.8	9.8	9.8	9.8	9.8	9.8
	29	SHC	10.8	10.8	10.8	10.8	10.8	10.8	10.8	10.8	10.8	10.8	10.8	10.8	10.8	10.8	10.8
	31	SHC	11.9	11.9	11.9	11.9	11.9	11.9	11.9	11.9	11.9	11.9	11.9	11.9	11.9	11.9	11.9
19		TC	14.0	14.0	14.0	14.0	14.0	14.0	14.0	14.0	14.0	14.0	14.0	14.0	14.0	14.0	14.0
	21	SHC	6.3	6.3	6.3	6.3	6.3	6.3	6.3	6.3	6.3	6.3	6.3	6.3	6.3	6.3	6.3
	23	SHC	7.4	7.4	7.4	7.4	7.4	7.4	7.4	7.4	7.4	7.4	7.4	7.4	7.4	7.4	7.4
	25	SHC	8.4	8.4	8.4	8.4	8.4	8.4	8.4	8.4	8.4	8.4	8.4	8.4	8.4	8.4	8.4
	27	SHC	9.5	9.5	9.5	9.5	9.5	9.5	9.5	9.5	9.5	9.5	9.5	9.5	9.5	9.5	9.5
	29	SHC	10.5	10.5	10.5	10.5	10.5	10.5	10.5	10.5	10.5	10.5	10.5	10.5	10.5	10.5	10.5
	31	SHC	11.6	11.6	11.6	11.6	11.6	11.6	11.6	11.6	11.6	11.6	11.6	11.6	11.6	11.6	11.6
20		TC	14.9	14.9	14.9	14.9	14.9	14.9	14.9	14.9	14.9	14.9	14.9	14.9	14.9	14.9	14.6
	23	SHC	7.0	7.0	7.0	7.0	7.0	7.0	7.0	7.0	7.0	7.0	7.0	7.0	7.0	7.0	6.9
	25	SHC	8.1	8.1	8.1	8.1	8.1	8.1	8.1	8.1	8.1	8.1	8.1	8.1	8.1	8.1	8.0
	27	SHC	9.1	9.1	9.1	9.1	9.1	9.1	9.1	9.1	9.1	9.1	9.1	9.1	9.1	9.1	9.0
	29	SHC	10.2	10.2	10.2	10.2	10.2	10.2	10.2	10.2	10.2	10.2	10.2	10.2	10.2	10.2	10.1
	31	SHC	11.2	11.2	11.2	11.2	11.2	11.2	11.2	11.2	11.2	11.2	11.2	11.2	11.2	11.2	11.1
21		TC	15.9	15.9	15.9	15.9	15.9	15.9	15.9	15.9	15.9	15.9	15.9	15.9	15.6	15.2	15.0
	23	SHC	6.7	6.7	6.7	6.7	6.7	6.7	6.7	6.7	6.7	6.7	6.7	6.7	6.6	6.4	6.3
	25	SHC	7.7	7.7	7.7	7.7	7.7	7.7	7.7	7.7	7.7	7.7	7.7	7.7	7.6	7.4	7.3
	27	SHC	8.8	8.8	8.8	8.8	8.8	8.8	8.8	8.8	8.8	8.8	8.8	8.8	8.7	8.5	8.4
	29	SHC	9.8	9.8	9.8	9.8	9.8	9.8	9.8	9.8	9.8	9.8	9.8	9.8	9.7	9.5	9.4
	31	SHC	10.9	10.9	10.9	10.9	10.9	10.9	10.9	10.9	10.9	10.9	10.9	10.9	10.8	10.6	10.5
22		TC	16.8	16.8	16.8	16.8	16.8	16.8	16.8	16.8	16.8	16.8	16.8	16.4	15.9	15.5	15.3
	25	SHC	7.3	7.3	7.3	7.3	7.3	7.3	7.3	7.3	7.3	7.3	7.3	7.2	7.0	6.8	6.7
	27	SHC	8.4	8.4	8.4	8.4	8.4	8.4	8.4	8.4	8.4	8.4	8.4	8.2	8.0	7.9	7.8
	29	SHC	9.4	9.4	9.4	9.4	9.4	9.4	9.4	9.4	9.4	9.4	9.4	9.3	9.1	8.9	8.8
	31	SHC	10.5	10.5	10.5	10.5	10.5	10.5	10.5	10.5	10.5	10.5	10.5	10.3	10.1	9.9	9.9
23		TC	17.7	17.7	17.7	17.7	17.7	17.7	17.7	17.7	17.7	17.7	17.2	16.7	16.3	15.8	15.6
	25	SHC	6.9	6.9	6.9	6.9	6.9	6.9	6.9	6.9	6.9	6.9	6.7	6.5	6.3	6.2	6.1
	27	SHC	8.0	8.0	8.0	8.0	8.0	8.0	8.0	8.0	8.0	8.0	7.8	7.6	7.4	7.2	7.1
	29	SHC	9.0	9.0	9.0	9.0	9.0	9.0	9.0	9.0	9.0	9.0	8.8	8.6	8.4	8.3	8.2
	31	SHC	10.1	10.1	10.1	10.1	10.1	10.1	10.1	10.1	10.1	10.1	9.9	9.7	9.5	9.3	9.2

3. Cooling Capacity of Indoor Unit

• S-160MU1E51, S-160MU1E5

Power supply : 220/230/240V 1phase-50,60Hz TC : Total Cooling Capacity (kW) SHC : Sensible Heat Capacity (kW)

This data is when the indoor unit connects with 16HP outdoor unit.

RATING CAPACITY:		16.0 kW AIR FLOW RATE: 36.0 m³/min															
EVAPORATOR		CONDENSER															
AIR INTAKE. TEMP		AMBIENT TEMP. (°C)															
W.B.	D.B.		15	17	19	21	23	25	27	29	31	33	35	37	39	41	43
14		TC	10.7	10.7	10.7	10.7	10.7	10.7	10.7	10.7	10.7	10.7	10.7	10.7	10.7	10.7	10.7
	21	SHC	8.5	8.5	8.5	8.5	8.5	8.5	8.5	8.5	8.5	8.5	8.5	8.5	8.5	8.5	8.5
	23	SHC	9.5	9.5	9.5	9.5	9.5	9.5	9.5	9.5	9.5	9.5	9.5	9.5	9.5	9.5	9.5
	25	SHC	10.6	10.6	10.6	10.6	10.6	10.6	10.6	10.6	10.6	10.6	10.6	10.6	10.6	10.6	10.6
	27	SHC	10.7	10.7	10.7	10.7	10.7	10.7	10.7	10.7	10.7	10.7	10.7	10.7	10.7	10.7	10.7
15		TC	11.7	11.7	11.7	11.7	11.7	11.7	11.7	11.7	11.7	11.7	11.7	11.7	11.7	11.7	11.7
	21	SHC	8.3	8.3	8.3	8.3	8.3	8.3	8.3	8.3	8.3	8.3	8.3	8.3	8.3	8.3	8.3
	23	SHC	9.3	9.3	9.3	9.3	9.3	9.3	9.3	9.3	9.3	9.3	9.3	9.3	9.3	9.3	9.3
	25	SHC	10.4	10.4	10.4	10.4	10.4	10.4	10.4	10.4	10.4	10.4	10.4	10.4	10.4	10.4	10.4
	27	SHC	11.5	11.5	11.5	11.5	11.5	11.5	11.5	11.5	11.5	11.5	11.5	11.5	11.5	11.5	11.5
16		TC	12.8	12.8	12.8	12.8	12.8	12.8	12.8	12.8	12.8	12.8	12.8	12.8	12.8	12.8	12.8
	21	SHC	8.1	8.1	8.1	8.1	8.1	8.1	8.1	8.1	8.1	8.1	8.1	8.1	8.1	8.1	8.1
	23	SHC	9.1	9.1	9.1	9.1	9.1	9.1	9.1	9.1	9.1	9.1	9.1	9.1	9.1	9.1	9.1
	25	SHC	10.2	10.2	10.2	10.2	10.2	10.2	10.2	10.2	10.2	10.2	10.2	10.2	10.2	10.2	10.2
	27	SHC	11.3	11.3	11.3	11.3	11.3	11.3	11.3	11.3	11.3	11.3	11.3	11.3	11.3	11.3	11.3
	29	SHC	12.3	12.3	12.3	12.3	12.3	12.3	12.3	12.3	12.3	12.3	12.3	12.3	12.3	12.3	12.3
17		TC	13.9	13.9	13.9	13.9	13.9	13.9	13.9	13.9	13.9	13.9	13.9	13.9	13.9	13.9	13.9
	21	SHC	7.8	7.8	7.8	7.8	7.8	7.8	7.8	7.8	7.8	7.8	7.8	7.8	7.8	7.8	7.8
	23	SHC	8.9	8.9	8.9	8.9	8.9	8.9	8.9	8.9	8.9	8.9	8.9	8.9	8.9	8.9	8.9
	25	SHC	10.0	10.0	10.0	10.0	10.0	10.0	10.0	10.0	10.0	10.0	10.0	10.0	10.0	10.0	10.0
	27	SHC	11.1	11.1	11.1	11.1	11.1	11.1	11.1	11.1	11.1	11.1	11.1	11.1	11.1	11.1	11.1
	29	SHC	12.1	12.1	12.1	12.1	12.1	12.1	12.1	12.1	12.1	12.1	12.1	12.1	12.1	12.1	12.1
18		TC	14.9	14.9	14.9	14.9	14.9	14.9	14.9	14.9	14.9	14.9	14.9	14.9	14.9	14.9	14.9
	21	SHC	7.6	7.6	7.6	7.6	7.6	7.6	7.6	7.6	7.6	7.6	7.6	7.6	7.6	7.6	7.6
	23	SHC	8.6	8.6	8.6	8.6	8.6	8.6	8.6	8.6	8.6	8.6	8.6	8.6	8.6	8.6	8.6
	25	SHC	9.7	9.7	9.7	9.7	9.7	9.7	9.7	9.7	9.7	9.7	9.7	9.7	9.7	9.7	9.7
	27	SHC	10.8	10.8	10.8	10.8	10.8	10.8	10.8	10.8	10.8	10.8	10.8	10.8	10.8	10.8	10.8
	29	SHC	11.8	11.8	11.8	11.8	11.8	11.8	11.8	11.8	11.8	11.8	11.8	11.8	11.8	11.8	11.8
	31	SHC	12.9	12.9	12.9	12.9	12.9	12.9	12.9	12.9	12.9	12.9	12.9	12.9	12.9	12.9	12.9
19		TC	16.0	16.0	16.0	16.0	16.0	16.0	16.0	16.0	16.0	16.0	16.0	16.0	16.0	16.0	16.0
	21	SHC	7.3	7.3	7.3	7.3	7.3	7.3	7.3	7.3	7.3	7.3	7.3	7.3	7.3	7.3	7.3
	23	SHC	8.3	8.3	8.3	8.3	8.3	8.3	8.3	8.3	8.3	8.3	8.3	8.3	8.3	8.3	8.3
	25	SHC	9.4	9.4	9.4	9.4	9.4	9.4	9.4	9.4	9.4	9.4	9.4	9.4	9.4	9.4	9.4
	27	SHC	10.5	10.5	10.5	10.5	10.5	10.5	10.5	10.5	10.5	10.5	10.5	10.5	10.5	10.5	10.5
	29	SHC	11.6	11.6	11.6	11.6	11.6	11.6	11.6	11.6	11.6	11.6	11.6	11.6	11.6	11.6	11.6
	31	SHC	12.6	12.6	12.6	12.6	12.6	12.6	12.6	12.6	12.6	12.6	12.6	12.6	12.6	12.6	12.6
20		TC	17.1	17.1	17.1	17.1	17.1	17.1	17.1	17.1	17.1	17.1	17.1	17.1	17.1	17.0	16.7
	23	SHC	8.0	8.0	8.0	8.0	8.0	8.0	8.0	8.0	8.0	8.0	8.0	8.0	8.0	8.0	7.9
	25	SHC	9.1	9.1	9.1	9.1	9.1	9.1	9.1	9.1	9.1	9.1	9.1	9.1	9.1	9.1	8.9
	27	SHC	10.2	10.2	10.2	10.2	10.2	10.2	10.2	10.2	10.2	10.2	10.2	10.2	10.2	10.1	10.0
	29	SHC	11.3	11.3	11.3	11.3	11.3	11.3	11.3	11.3	11.3	11.3	11.3	11.3	11.3	11.2	11.1
	31	SHC	12.3	12.3	12.3	12.3	12.3	12.3	12.3	12.3	12.3	12.3	12.3	12.3	12.3	12.3	12.2
21		TC	18.1	18.1	18.1	18.1	18.1	18.1	18.1	18.1	18.1	18.1	18.1	18.1	17.9	17.3	17.1
	23	SHC	7.7	7.7	7.7	7.7	7.7	7.7	7.7	7.7	7.7	7.7	7.7	7.7	7.6	7.3	7.2
	25	SHC	8.8	8.8	8.8	8.8	8.8	8.8	8.8	8.8	8.8	8.8	8.8	8.8	8.6	8.4	8.3
	27	SHC	9.8	9.8	9.8	9.8	9.8	9.8	9.8	9.8	9.8	9.8	9.8	9.8	9.7	9.5	9.4
	29	SHC	10.9	10.9	10.9	10.9	10.9	10.9	10.9	10.9	10.9	10.9	10.9	10.9	10.8	10.6	10.5
	31	SHC	12.0	12.0	12.0	12.0	12.0	12.0	12.0	12.0	12.0	12.0	12.0	12.0	11.9	11.6	11.5
22		TC	19.2	19.2	19.2	19.2	19.2	19.2	19.2	19.2	19.2	19.2	19.2	18.8	18.2	17.7	17.4
	25	SHC	8.4	8.4	8.4	8.4	8.4	8.4	8.4	8.4	8.4	8.4	8.4	8.2	8.0	7.7	7.6
	27	SHC	9.5	9.5	9.5	9.5	9.5	9.5	9.5	9.5	9.5	9.5	9.5	9.3	9.0	8.8	8.7
	29	SHC	10.5	10.5	10.5	10.5	10.5	10.5	10.5	10.5	10.5	10.5	10.5	10.3	10.1	9.9	9.8
	31	SHC	11.6	11.6	11.6	11.6	11.6	11.6	11.6	11.6	11.6	11.6	11.6	11.4	11.2	11.0	10.9
23		TC	20.3	20.3	20.3	20.3	20.3	20.3	20.3	20.3	20.3	20.3	19.7	19.1	18.6	18.0	17.8
	25	SHC	8.0	8.0	8.0	8.0	8.0	8.0	8.0	8.0	8.0	8.0	7.8	7.5	7.3	7.1	6.9
	27	SHC	9.1	9.1	9.1	9.1	9.1	9.1	9.1	9.1	9.1	9.1	8.8	8.6	8.3	8.1	8.0
	29	SHC	10.2	10.2	10.2	10.2	10.2	10.2	10.2	10.2	10.2	10.2	9.9	9.7	9.4	9.2	9.1
	31	SHC	11.2	11.2	11.2	11.2	11.2	11.2	11.2	11.2	11.2	11.2	11.0	10.7	10.5	10.3	10.2

3. Cooling Capacity of Indoor Unit

3-2. 4-Way Cassette 60×60 Type (Y1 Type)

- S-22MY1E5

Power supply : 220/230/240V 1phase-50,60Hz TC : Total Cooling Capacity (kW) SHC : Sensible Heat Capacity (kW)
This data is when the indoor unit connects with 16HP outdoor unit.

RATING CAPACITY:		2.2 kW	AIR FLOW RATE: 8.0 m³/min														
EVAPORATOR			CONDENSER														
AIR INTAKE. TEMP			AMBIENT TEMP. (°C)														
W.B.	D.B.		15	17	19	21	23	25	27	29	31	33	35	37	39	41	43
14		TC	1.5	1.5	1.5	1.5	1.5	1.5	1.5	1.5	1.5	1.5	1.5	1.5	1.5	1.5	1.5
	21	SHC	1.5	1.5	1.5	1.5	1.5	1.5	1.5	1.5	1.5	1.5	1.5	1.5	1.5	1.5	1.5
	23	SHC	1.5	1.5	1.5	1.5	1.5	1.5	1.5	1.5	1.5	1.5	1.5	1.5	1.5	1.5	1.5
	25	SHC	1.5	1.5	1.5	1.5	1.5	1.5	1.5	1.5	1.5	1.5	1.5	1.5	1.5	1.5	1.5
	27	SHC	1.5	1.5	1.5	1.5	1.5	1.5	1.5	1.5	1.5	1.5	1.5	1.5	1.5	1.5	1.5
15		TC	1.6	1.6	1.6	1.6	1.6	1.6	1.6	1.6	1.6	1.6	1.6	1.6	1.6	1.6	1.6
	21	SHC	1.6	1.6	1.6	1.6	1.6	1.6	1.6	1.6	1.6	1.6	1.6	1.6	1.6	1.6	1.6
	23	SHC	1.6	1.6	1.6	1.6	1.6	1.6	1.6	1.6	1.6	1.6	1.6	1.6	1.6	1.6	1.6
	25	SHC	1.6	1.6	1.6	1.6	1.6	1.6	1.6	1.6	1.6	1.6	1.6	1.6	1.6	1.6	1.6
	27	SHC	1.6	1.6	1.6	1.6	1.6	1.6	1.6	1.6	1.6	1.6	1.6	1.6	1.6	1.6	1.6
16		TC	1.8	1.8	1.8	1.8	1.8	1.8	1.8	1.8	1.8	1.8	1.8	1.8	1.8	1.8	1.8
	21	SHC	1.5	1.5	1.5	1.5	1.5	1.5	1.5	1.5	1.5	1.5	1.5	1.5	1.5	1.5	1.5
	23	SHC	1.8	1.8	1.8	1.8	1.8	1.8	1.8	1.8	1.8	1.8	1.8	1.8	1.8	1.8	1.8
	25	SHC	1.8	1.8	1.8	1.8	1.8	1.8	1.8	1.8	1.8	1.8	1.8	1.8	1.8	1.8	1.8
	27	SHC	1.8	1.8	1.8	1.8	1.8	1.8	1.8	1.8	1.8	1.8	1.8	1.8	1.8	1.8	1.8
	29	SHC	1.8	1.8	1.8	1.8	1.8	1.8	1.8	1.8	1.8	1.8	1.8	1.8	1.8	1.8	1.8
17		TC	1.9	1.9	1.9	1.9	1.9	1.9	1.9	1.9	1.9	1.9	1.9	1.9	1.9	1.9	1.9
	21	SHC	1.4	1.4	1.4	1.4	1.4	1.4	1.4	1.4	1.4	1.4	1.4	1.4	1.4	1.4	1.4
	23	SHC	1.7	1.7	1.7	1.7	1.7	1.7	1.7	1.7	1.7	1.7	1.7	1.7	1.7	1.7	1.7
	25	SHC	1.9	1.9	1.9	1.9	1.9	1.9	1.9	1.9	1.9	1.9	1.9	1.9	1.9	1.9	1.9
	27	SHC	1.9	1.9	1.9	1.9	1.9	1.9	1.9	1.9	1.9	1.9	1.9	1.9	1.9	1.9	1.9
	29	SHC	1.9	1.9	1.9	1.9	1.9	1.9	1.9	1.9	1.9	1.9	1.9	1.9	1.9	1.9	1.9
18		TC	2.1	2.1	2.1	2.1	2.1	2.1	2.1	2.1	2.1	2.1	2.1	2.1	2.1	2.1	2.1
	21	SHC	1.2	1.2	1.2	1.2	1.2	1.2	1.2	1.2	1.2	1.2	1.2	1.2	1.2	1.2	1.2
	23	SHC	1.5	1.5	1.5	1.5	1.5	1.5	1.5	1.5	1.5	1.5	1.5	1.5	1.5	1.5	1.5
	25	SHC	1.9	1.9	1.9	1.9	1.9	1.9	1.9	1.9	1.9	1.9	1.9	1.9	1.9	1.9	1.9
	27	SHC	2.1	2.1	2.1	2.1	2.1	2.1	2.1	2.1	2.1	2.1	2.1	2.1	2.1	2.1	2.1
	29	SHC	2.1	2.1	2.1	2.1	2.1	2.1	2.1	2.1	2.1	2.1	2.1	2.1	2.1	2.1	2.1
	31	SHC	2.1	2.1	2.1	2.1	2.1	2.1	2.1	2.1	2.1	2.1	2.1	2.1	2.1	2.1	2.1
19		TC	2.2	2.2	2.2	2.2	2.2	2.2	2.2	2.2	2.2	2.2	2.2	2.2	2.2	2.2	2.2
	21	SHC	1.1	1.1	1.1	1.1	1.1	1.1	1.1	1.1	1.1	1.1	1.1	1.1	1.1	1.1	1.1
	23	SHC	1.4	1.4	1.4	1.4	1.4	1.4	1.4	1.4	1.4	1.4	1.4	1.4	1.4	1.4	1.4
	25	SHC	1.7	1.7	1.7	1.7	1.7	1.7	1.7	1.7	1.7	1.7	1.7	1.7	1.7	1.7	1.7
	27	SHC	2.1	2.1	2.1	2.1	2.1	2.1	2.1	2.1	2.1	2.1	2.1	2.1	2.1	2.1	2.1
	29	SHC	2.2	2.2	2.2	2.2	2.2	2.2	2.2	2.2	2.2	2.2	2.2	2.2	2.2	2.2	2.2
	31	SHC	2.2	2.2	2.2	2.2	2.2	2.2	2.2	2.2	2.2	2.2	2.2	2.2	2.2	2.2	2.2
20		TC	2.3	2.3	2.3	2.3	2.3	2.3	2.3	2.3	2.3	2.3	2.3	2.3	2.3	2.3	2.3
	23	SHC	1.3	1.3	1.3	1.3	1.3	1.3	1.3	1.3	1.3	1.3	1.3	1.3	1.3	1.3	1.2
	25	SHC	1.6	1.6	1.6	1.6	1.6	1.6	1.6	1.6	1.6	1.6	1.6	1.6	1.6	1.6	1.6
	27	SHC	1.9	1.9	1.9	1.9	1.9	1.9	1.9	1.9	1.9	1.9	1.9	1.9	1.9	1.9	1.9
	29	SHC	2.2	2.2	2.2	2.2	2.2	2.2	2.2	2.2	2.2	2.2	2.2	2.2	2.2	2.2	2.2
	31	SHC	2.3	2.3	2.3	2.3	2.3	2.3	2.3	2.3	2.3	2.3	2.3	2.3	2.3	2.3	2.3
21		TC	2.5	2.5	2.5	2.5	2.5	2.5	2.5	2.5	2.5	2.5	2.5	2.5	2.5	2.4	2.3
	23	SHC	1.1	1.1	1.1	1.1	1.1	1.1	1.1	1.1	1.1	1.1	1.1	1.1	1.1	1.1	1.1
	25	SHC	1.5	1.5	1.5	1.5	1.5	1.5	1.5	1.5	1.5	1.5	1.5	1.5	1.4	1.4	1.4
	27	SHC	1.8	1.8	1.8	1.8	1.8	1.8	1.8	1.8	1.8	1.8	1.8	1.8	1.8	1.7	1.7
	29	SHC	2.1	2.1	2.1	2.1	2.1	2.1	2.1	2.1	2.1	2.1	2.1	2.1	2.1	2.1	2.1
	31	SHC	2.4	2.4	2.4	2.4	2.4	2.4	2.4	2.4	2.4	2.4	2.4	2.4	2.4	2.4	2.3
22		TC	2.6	2.6	2.6	2.6	2.6	2.6	2.6	2.6	2.6	2.6	2.6	2.6	2.5	2.4	2.4
	25	SHC	1.3	1.3	1.3	1.3	1.3	1.3	1.3	1.3	1.3	1.3	1.3	1.3	1.3	1.2	1.2
	27	SHC	1.6	1.6	1.6	1.6	1.6	1.6	1.6	1.6	1.6	1.6	1.6	1.6	1.6	1.6	1.6
	29	SHC	2.0	2.0	2.0	2.0	2.0	2.0	2.0	2.0	2.0	2.0	2.0	1.9	1.9	1.9	1.9
	31	SHC	2.3	2.3	2.3	2.3	2.3	2.3	2.3	2.3	2.3	2.3	2.3	2.3	2.2	2.2	2.2
23		TC	2.8	2.8	2.8	2.8	2.8	2.8	2.8	2.8	2.8	2.8	2.7	2.6	2.6	2.5	2.4
	25	SHC	1.2	1.2	1.2	1.2	1.2	1.2	1.2	1.2	1.2	1.2	1.1	1.1	1.1	1.1	1.0
	27	SHC	1.5	1.5	1.5	1.5	1.5	1.5	1.5	1.5	1.5	1.5	1.5	1.4	1.4	1.4	1.4
	29	SHC	1.8	1.8	1.8	1.8	1.8	1.8	1.8	1.8	1.8	1.8	1.8	1.8	1.7	1.7	1.7
	31	SHC	2.1	2.1	2.1	2.1	2.1	2.1	2.1	2.1	2.1	2.1	2.1	2.1	2.1	2.0	2.0

3. Cooling Capacity of Indoor Unit

● S-28MY1E5

Power supply :220/230/240V 1phase-50,60Hz TC : Total Cooling Capacity (kW) SHC : Sensible Heat Capacity (kW)

This data is when the indoor unit connects with 16HP outdoor unit.

RATING CAPACITY:		2.8 kW	AIR FLOW RATE: 8.0 m³/min														
EVAPORATOR			CONDENSER														
AIR INTAKE. TEMP			AMBIENT TEMP. (°C)														
W.B.	D.B.		15	17	19	21	23	25	27	29	31	33	35	37	39	41	43
14		TC	1.9	1.9	1.9	1.9	1.9	1.9	1.9	1.9	1.9	1.9	1.9	1.9	1.9	1.9	1.9
	21	SHC	1.6	1.6	1.6	1.6	1.6	1.6	1.6	1.6	1.6	1.6	1.6	1.6	1.6	1.6	1.6
	23	SHC	1.9	1.9	1.9	1.9	1.9	1.9	1.9	1.9	1.9	1.9	1.9	1.9	1.9	1.9	1.9
	25	SHC	1.9	1.9	1.9	1.9	1.9	1.9	1.9	1.9	1.9	1.9	1.9	1.9	1.9	1.9	1.9
	27	SHC	1.9	1.9	1.9	1.9	1.9	1.9	1.9	1.9	1.9	1.9	1.9	1.9	1.9	1.9	1.9
15		TC	2.1	2.1	2.1	2.1	2.1	2.1	2.1	2.1	2.1	2.1	2.1	2.1	2.1	2.1	2.1
	21	SHC	1.6	1.6	1.6	1.6	1.6	1.6	1.6	1.6	1.6	1.6	1.6	1.6	1.6	1.6	1.6
	23	SHC	1.8	1.8	1.8	1.8	1.8	1.8	1.8	1.8	1.8	1.8	1.8	1.8	1.8	1.8	1.8
	25	SHC	2.0	2.0	2.0	2.0	2.0	2.0	2.0	2.0	2.0	2.0	2.0	2.0	2.0	2.0	2.0
	27	SHC	2.1	2.1	2.1	2.1	2.1	2.1	2.1	2.1	2.1	2.1	2.1	2.1	2.1	2.1	2.1
16		TC	2.2	2.2	2.2	2.2	2.2	2.2	2.2	2.2	2.2	2.2	2.2	2.2	2.2	2.2	2.2
	21	SHC	1.5	1.5	1.5	1.5	1.5	1.5	1.5	1.5	1.5	1.5	1.5	1.5	1.5	1.5	1.5
	23	SHC	1.7	1.7	1.7	1.7	1.7	1.7	1.7	1.7	1.7	1.7	1.7	1.7	1.7	1.7	1.7
	25	SHC	2.0	2.0	2.0	2.0	2.0	2.0	2.0	2.0	2.0	2.0	2.0	2.0	2.0	2.0	2.0
	27	SHC	2.2	2.2	2.2	2.2	2.2	2.2	2.2	2.2	2.2	2.2	2.2	2.2	2.2	2.2	2.2
	29	SHC	2.2	2.2	2.2	2.2	2.2	2.2	2.2	2.2	2.2	2.2	2.2	2.2	2.2	2.2	2.2
17		TC	2.4	2.4	2.4	2.4	2.4	2.4	2.4	2.4	2.4	2.4	2.4	2.4	2.4	2.4	2.4
	21	SHC	1.4	1.4	1.4	1.4	1.4	1.4	1.4	1.4	1.4	1.4	1.4	1.4	1.4	1.4	1.4
	23	SHC	1.7	1.7	1.7	1.7	1.7	1.7	1.7	1.7	1.7	1.7	1.7	1.7	1.7	1.7	1.7
	25	SHC	1.9	1.9	1.9	1.9	1.9	1.9	1.9	1.9	1.9	1.9	1.9	1.9	1.9	1.9	1.9
	27	SHC	2.1	2.1	2.1	2.1	2.1	2.1	2.1	2.1	2.1	2.1	2.1	2.1	2.1	2.1	2.1
	29	SHC	2.4	2.4	2.4	2.4	2.4	2.4	2.4	2.4	2.4	2.4	2.4	2.4	2.4	2.4	2.4
18		TC	2.6	2.6	2.6	2.6	2.6	2.6	2.6	2.6	2.6	2.6	2.6	2.6	2.6	2.6	2.6
	21	SHC	1.4	1.4	1.4	1.4	1.4	1.4	1.4	1.4	1.4	1.4	1.4	1.4	1.4	1.4	1.4
	23	SHC	1.6	1.6	1.6	1.6	1.6	1.6	1.6	1.6	1.6	1.6	1.6	1.6	1.6	1.6	1.6
	25	SHC	1.8	1.8	1.8	1.8	1.8	1.8	1.8	1.8	1.8	1.8	1.8	1.8	1.8	1.8	1.8
	27	SHC	2.1	2.1	2.1	2.1	2.1	2.1	2.1	2.1	2.1	2.1	2.1	2.1	2.1	2.1	2.1
	29	SHC	2.3	2.3	2.3	2.3	2.3	2.3	2.3	2.3	2.3	2.3	2.3	2.3	2.3	2.3	2.3
	31	SHC	2.5	2.5	2.5	2.5	2.5	2.5	2.5	2.5	2.5	2.5	2.5	2.5	2.5	2.5	2.5
19		TC	2.8	2.8	2.8	2.8	2.8	2.8	2.8	2.8	2.8	2.8	2.8	2.8	2.8	2.8	2.8
	21	SHC	1.3	1.3	1.3	1.3	1.3	1.3	1.3	1.3	1.3	1.3	1.3	1.3	1.3	1.3	1.3
	23	SHC	1.5	1.5	1.5	1.5	1.5	1.5	1.5	1.5	1.5	1.5	1.5	1.5	1.5	1.5	1.5
	25	SHC	1.7	1.7	1.7	1.7	1.7	1.7	1.7	1.7	1.7	1.7	1.7	1.7	1.7	1.7	1.7
	27	SHC	2.0	2.0	2.0	2.0	2.0	2.0	2.0	2.0	2.0	2.0	2.0	2.0	2.0	2.0	2.0
	29	SHC	2.2	2.2	2.2	2.2	2.2	2.2	2.2	2.2	2.2	2.2	2.2	2.2	2.2	2.2	2.2
	31	SHC	2.4	2.4	2.4	2.4	2.4	2.4	2.4	2.4	2.4	2.4	2.4	2.4	2.4	2.4	2.4
20		TC	3.0	3.0	3.0	3.0	3.0	3.0	3.0	3.0	3.0	3.0	3.0	3.0	3.0	3.0	2.9
	23	SHC	1.4	1.4	1.4	1.4	1.4	1.4	1.4	1.4	1.4	1.4	1.4	1.4	1.4	1.4	1.4
	25	SHC	1.7	1.7	1.7	1.7	1.7	1.7	1.7	1.7	1.7	1.7	1.7	1.7	1.7	1.7	1.6
	27	SHC	1.9	1.9	1.9	1.9	1.9	1.9	1.9	1.9	1.9	1.9	1.9	1.9	1.9	1.9	1.9
	29	SHC	2.1	2.1	2.1	2.1	2.1	2.1	2.1	2.1	2.1	2.1	2.1	2.1	2.1	2.1	2.1
	31	SHC	2.4	2.4	2.4	2.4	2.4	2.4	2.4	2.4	2.4	2.4	2.4	2.4	2.4	2.4	2.3
21		TC	3.2	3.2	3.2	3.2	3.2	3.2	3.2	3.2	3.2	3.2	3.2	3.2	3.1	3.0	3.0
	23	SHC	1.3	1.3	1.3	1.3	1.3	1.3	1.3	1.3	1.3	1.3	1.3	1.3	1.3	1.3	1.3
	25	SHC	1.6	1.6	1.6	1.6	1.6	1.6	1.6	1.6	1.6	1.6	1.6	1.6	1.6	1.5	1.5
	27	SHC	1.8	1.8	1.8	1.8	1.8	1.8	1.8	1.8	1.8	1.8	1.8	1.8	1.8	1.8	1.7
	29	SHC	2.0	2.0	2.0	2.0	2.0	2.0	2.0	2.0	2.0	2.0	2.0	2.0	2.0	2.0	2.0
	31	SHC	2.3	2.3	2.3	2.3	2.3	2.3	2.3	2.3	2.3	2.3	2.3	2.3	2.3	2.2	2.2
22		TC	3.4	3.4	3.4	3.4	3.4	3.4	3.4	3.4	3.4	3.4	3.4	3.3	3.2	3.1	3.1
	25	SHC	1.5	1.5	1.5	1.5	1.5	1.5	1.5	1.5	1.5	1.5	1.5	1.5	1.4	1.4	1.4
	27	SHC	1.7	1.7	1.7	1.7	1.7	1.7	1.7	1.7	1.7	1.7	1.7	1.7	1.7	1.6	1.6
	29	SHC	2.0	2.0	2.0	2.0	2.0	2.0	2.0	2.0	2.0	2.0	2.0	1.9	1.9	1.8	1.8
	31	SHC	2.2	2.2	2.2	2.2	2.2	2.2	2.2	2.2	2.2	2.2	2.2	2.2	2.1	2.1	2.1
23		TC	3.5	3.5	3.5	3.5	3.5	3.5	3.5	3.5	3.5	3.5	3.4	3.3	3.3	3.2	3.1
	25	SHC	1.4	1.4	1.4	1.4	1.4	1.4	1.4	1.4	1.4	1.4	1.3	1.3	1.3	1.2	1.2
	27	SHC	1.6	1.6	1.6	1.6	1.6	1.6	1.6	1.6	1.6	1.6	1.6	1.5	1.5	1.5	1.5
	29	SHC	1.9	1.9	1.9	1.9	1.9	1.9	1.9	1.9	1.9	1.9	1.8	1.8	1.7	1.7	1.7
	31	SHC	2.1	2.1	2.1	2.1	2.1	2.1	2.1	2.1	2.1	2.1	2.1	2.0	2.0	1.9	1.9

3. Cooling Capacity of Indoor Unit

● S-36MY1E5

Power supply :220/230/240V 1phase-50,60Hz TC : Total Cooling Capacity (kW) SHC : Sensible Heat Capacity (kW)

This data is when the indoor unit connects with 16HP outdoor unit.

RATING CAPACITY:		3.6 kW	AIR FLOW RATE: 9.0 m³/min														
EVAPORATOR			CONDENSER														
AIR INTAKE. TEMP			AMBIENT TEMP. (°C)														
W.B.	D.B.		15	17	19	21	23	25	27	29	31	33	35	37	39	41	43
14		TC	2.4	2.4	2.4	2.4	2.4	2.4	2.4	2.4	2.4	2.4	2.4	2.4	2.4	2.4	2.4
	21	SHC	2.2	2.2	2.2	2.2	2.2	2.2	2.2	2.2	2.2	2.2	2.2	2.2	2.2	2.2	2.2
	23	SHC	2.4	2.4	2.4	2.4	2.4	2.4	2.4	2.4	2.4	2.4	2.4	2.4	2.4	2.4	2.4
	25	SHC	2.4	2.4	2.4	2.4	2.4	2.4	2.4	2.4	2.4	2.4	2.4	2.4	2.4	2.4	2.4
	27	SHC	2.4	2.4	2.4	2.4	2.4	2.4	2.4	2.4	2.4	2.4	2.4	2.4	2.4	2.4	2.4
15		TC	2.6	2.6	2.6	2.6	2.6	2.6	2.6	2.6	2.6	2.6	2.6	2.6	2.6	2.6	2.6
	21	SHC	2.1	2.1	2.1	2.1	2.1	2.1	2.1	2.1	2.1	2.1	2.1	2.1	2.1	2.1	2.1
	23	SHC	2.4	2.4	2.4	2.4	2.4	2.4	2.4	2.4	2.4	2.4	2.4	2.4	2.4	2.4	2.4
	25	SHC	2.6	2.6	2.6	2.6	2.6	2.6	2.6	2.6	2.6	2.6	2.6	2.6	2.6	2.6	2.6
	27	SHC	2.6	2.6	2.6	2.6	2.6	2.6	2.6	2.6	2.6	2.6	2.6	2.6	2.6	2.6	2.6
16		TC	2.9	2.9	2.9	2.9	2.9	2.9	2.9	2.9	2.9	2.9	2.9	2.9	2.9	2.9	2.9
	21	SHC	2.0	2.0	2.0	2.0	2.0	2.0	2.0	2.0	2.0	2.0	2.0	2.0	2.0	2.0	2.0
	23	SHC	2.3	2.3	2.3	2.3	2.3	2.3	2.3	2.3	2.3	2.3	2.3	2.3	2.3	2.3	2.3
	25	SHC	2.6	2.6	2.6	2.6	2.6	2.6	2.6	2.6	2.6	2.6	2.6	2.6	2.6	2.6	2.6
	27	SHC	2.9	2.9	2.9	2.9	2.9	2.9	2.9	2.9	2.9	2.9	2.9	2.9	2.9	2.9	2.9
	29	SHC	2.9	2.9	2.9	2.9	2.9	2.9	2.9	2.9	2.9	2.9	2.9	2.9	2.9	2.9	2.9
17		TC	3.1	3.1	3.1	3.1	3.1	3.1	3.1	3.1	3.1	3.1	3.1	3.1	3.1	3.1	3.1
	21	SHC	1.9	1.9	1.9	1.9	1.9	1.9	1.9	1.9	1.9	1.9	1.9	1.9	1.9	1.9	1.9
	23	SHC	2.2	2.2	2.2	2.2	2.2	2.2	2.2	2.2	2.2	2.2	2.2	2.2	2.2	2.2	2.2
	25	SHC	2.5	2.5	2.5	2.5	2.5	2.5	2.5	2.5	2.5	2.5	2.5	2.5	2.5	2.5	2.5
	27	SHC	2.8	2.8	2.8	2.8	2.8	2.8	2.8	2.8	2.8	2.8	2.8	2.8	2.8	2.8	2.8
	29	SHC	3.1	3.1	3.1	3.1	3.1	3.1	3.1	3.1	3.1	3.1	3.1	3.1	3.1	3.1	3.1
18		TC	3.4	3.4	3.4	3.4	3.4	3.4	3.4	3.4	3.4	3.4	3.4	3.4	3.4	3.4	3.4
	21	SHC	1.8	1.8	1.8	1.8	1.8	1.8	1.8	1.8	1.8	1.8	1.8	1.8	1.8	1.8	1.8
	23	SHC	2.1	2.1	2.1	2.1	2.1	2.1	2.1	2.1	2.1	2.1	2.1	2.1	2.1	2.1	2.1
	25	SHC	2.4	2.4	2.4	2.4	2.4	2.4	2.4	2.4	2.4	2.4	2.4	2.4	2.4	2.4	2.4
	27	SHC	2.7	2.7	2.7	2.7	2.7	2.7	2.7	2.7	2.7	2.7	2.7	2.7	2.7	2.7	2.7
	29	SHC	3.1	3.1	3.1	3.1	3.1	3.1	3.1	3.1	3.1	3.1	3.1	3.1	3.1	3.1	3.1
	31	SHC	3.4	3.4	3.4	3.4	3.4	3.4	3.4	3.4	3.4	3.4	3.4	3.4	3.4	3.4	3.4
19		TC	3.6	3.6	3.6	3.6	3.6	3.6	3.6	3.6	3.6	3.6	3.6	3.6	3.6	3.6	3.6
	21	SHC	1.6	1.6	1.6	1.6	1.6	1.6	1.6	1.6	1.6	1.6	1.6	1.6	1.6	1.6	1.6
	23	SHC	2.0	2.0	2.0	2.0	2.0	2.0	2.0	2.0	2.0	2.0	2.0	2.0	2.0	2.0	2.0
	25	SHC	2.3	2.3	2.3	2.3	2.3	2.3	2.3	2.3	2.3	2.3	2.3	2.3	2.3	2.3	2.3
	27	SHC	2.6	2.6	2.6	2.6	2.6	2.6	2.6	2.6	2.6	2.6	2.6	2.6	2.6	2.6	2.6
	29	SHC	2.9	2.9	2.9	2.9	2.9	2.9	2.9	2.9	2.9	2.9	2.9	2.9	2.9	2.9	2.9
	31	SHC	3.3	3.3	3.3	3.3	3.3	3.3	3.3	3.3	3.3	3.3	3.3	3.3	3.3	3.3	3.3
20		TC	3.8	3.8	3.8	3.8	3.8	3.8	3.8	3.8	3.8	3.8	3.8	3.8	3.8	3.8	3.8
	23	SHC	1.8	1.8	1.8	1.8	1.8	1.8	1.8	1.8	1.8	1.8	1.8	1.8	1.8	1.8	1.8
	25	SHC	2.2	2.2	2.2	2.2	2.2	2.2	2.2	2.2	2.2	2.2	2.2	2.2	2.2	2.2	2.1
	27	SHC	2.5	2.5	2.5	2.5	2.5	2.5	2.5	2.5	2.5	2.5	2.5	2.5	2.5	2.5	2.5
	29	SHC	2.8	2.8	2.8	2.8	2.8	2.8	2.8	2.8	2.8	2.8	2.8	2.8	2.8	2.8	2.8
	31	SHC	3.1	3.1	3.1	3.1	3.1	3.1	3.1	3.1	3.1	3.1	3.1	3.1	3.1	3.1	3.1
21		TC	4.1	4.1	4.1	4.1	4.1	4.1	4.1	4.1	4.1	4.1	4.1	4.1	4.0	3.9	3.8
	23	SHC	1.7	1.7	1.7	1.7	1.7	1.7	1.7	1.7	1.7	1.7	1.7	1.7	1.7	1.7	1.6
	25	SHC	2.0	2.0	2.0	2.0	2.0	2.0	2.0	2.0	2.0	2.0	2.0	2.0	2.0	2.0	2.0
	27	SHC	2.4	2.4	2.4	2.4	2.4	2.4	2.4	2.4	2.4	2.4	2.4	2.4	2.3	2.3	2.3
	29	SHC	2.7	2.7	2.7	2.7	2.7	2.7	2.7	2.7	2.7	2.7	2.7	2.7	2.7	2.6	2.6
	31	SHC	3.0	3.0	3.0	3.0	3.0	3.0	3.0	3.0	3.0	3.0	3.0	3.0	3.0	3.0	2.9
22		TC	4.3	4.3	4.3	4.3	4.3	4.3	4.3	4.3	4.3	4.3	4.3	4.2	4.1	4.0	3.9
	25	SHC	1.9	1.9	1.9	1.9	1.9	1.9	1.9	1.9	1.9	1.9	1.9	1.9	1.8	1.8	1.8
	27	SHC	2.2	2.2	2.2	2.2	2.2	2.2	2.2	2.2	2.2	2.2	2.2	2.2	2.2	2.1	2.1
	29	SHC	2.6	2.6	2.6	2.6	2.6	2.6	2.6	2.6	2.6	2.6	2.6	2.5	2.5	2.4	2.4
	31	SHC	2.9	2.9	2.9	2.9	2.9	2.9	2.9	2.9	2.9	2.9	2.9	2.9	2.8	2.8	2.7
23		TC	4.6	4.6	4.6	4.6	4.6	4.6	4.6	4.6	4.6	4.6	4.4	4.3	4.2	4.1	4.0
	25	SHC	1.8	1.8	1.8	1.8	1.8	1.8	1.8	1.8	1.8	1.8	1.7	1.7	1.6	1.6	1.6
	27	SHC	2.1	2.1	2.1	2.1	2.1	2.1	2.1	2.1	2.1	2.1	2.1	2.0	2.0	1.9	1.9
	29	SHC	2.4	2.4	2.4	2.4	2.4	2.4	2.4	2.4	2.4	2.4	2.4	2.3	2.3	2.3	2.2
	31	SHC	2.8	2.8	2.8	2.8	2.8	2.8	2.8	2.8	2.8	2.8	2.7	2.7	2.6	2.6	2.6

3. Cooling Capacity of Indoor Unit

• S-45MY1E5

Power supply : 220/230/240V 1phase-50,60Hz TC : Total Cooling Capacity (kW) SHC : Sensible Heat Capacity (kW)

This data is when the indoor unit connects with 16HP outdoor unit.

RATING CAPACITY:		4.7 kW	AIR FLOW RATE: 10.7 m³/min														
EVAPORATOR			CONDENSER														
AIR INTAKE. TEMP			AMBIENT TEMP. (°C)														
W.B.	D.B.		15	17	19	21	23	25	27	29	31	33	35	37	39	41	43
14		TC	3.1	3.1	3.1	3.1	3.1	3.1	3.1	3.1	3.1	3.1	3.1	3.1	3.1	3.1	3.1
	21	SHC	2.5	2.5	2.5	2.5	2.5	2.5	2.5	2.5	2.5	2.5	2.5	2.5	2.5	2.5	2.5
	23	SHC	2.8	2.8	2.8	2.8	2.8	2.8	2.8	2.8	2.8	2.8	2.8	2.8	2.8	2.8	2.8
	25	SHC	3.1	3.1	3.1	3.1	3.1	3.1	3.1	3.1	3.1	3.1	3.1	3.1	3.1	3.1	3.1
	27	SHC	3.1	3.1	3.1	3.1	3.1	3.1	3.1	3.1	3.1	3.1	3.1	3.1	3.1	3.1	3.1
15		TC	3.4	3.4	3.4	3.4	3.4	3.4	3.4	3.4	3.4	3.4	3.4	3.4	3.4	3.4	3.4
	21	SHC	2.4	2.4	2.4	2.4	2.4	2.4	2.4	2.4	2.4	2.4	2.4	2.4	2.4	2.4	2.4
	23	SHC	2.8	2.8	2.8	2.8	2.8	2.8	2.8	2.8	2.8	2.8	2.8	2.8	2.8	2.8	2.8
	25	SHC	3.1	3.1	3.1	3.1	3.1	3.1	3.1	3.1	3.1	3.1	3.1	3.1	3.1	3.1	3.1
	27	SHC	3.4	3.4	3.4	3.4	3.4	3.4	3.4	3.4	3.4	3.4	3.4	3.4	3.4	3.4	3.4
16		TC	3.8	3.8	3.8	3.8	3.8	3.8	3.8	3.8	3.8	3.8	3.8	3.8	3.8	3.8	3.8
	21	SHC	2.4	2.4	2.4	2.4	2.4	2.4	2.4	2.4	2.4	2.4	2.4	2.4	2.4	2.4	2.4
	23	SHC	2.7	2.7	2.7	2.7	2.7	2.7	2.7	2.7	2.7	2.7	2.7	2.7	2.7	2.7	2.7
	25	SHC	3.0	3.0	3.0	3.0	3.0	3.0	3.0	3.0	3.0	3.0	3.0	3.0	3.0	3.0	3.0
	27	SHC	3.3	3.3	3.3	3.3	3.3	3.3	3.3	3.3	3.3	3.3	3.3	3.3	3.3	3.3	3.3
	29	SHC	3.6	3.6	3.6	3.6	3.6	3.6	3.6	3.6	3.6	3.6	3.6	3.6	3.6	3.6	3.6
17		TC	4.1	4.1	4.1	4.1	4.1	4.1	4.1	4.1	4.1	4.1	4.1	4.1	4.1	4.1	4.1
	21	SHC	2.3	2.3	2.3	2.3	2.3	2.3	2.3	2.3	2.3	2.3	2.3	2.3	2.3	2.3	2.3
	23	SHC	2.6	2.6	2.6	2.6	2.6	2.6	2.6	2.6	2.6	2.6	2.6	2.6	2.6	2.6	2.6
	25	SHC	2.9	2.9	2.9	2.9	2.9	2.9	2.9	2.9	2.9	2.9	2.9	2.9	2.9	2.9	2.9
	27	SHC	3.3	3.3	3.3	3.3	3.3	3.3	3.3	3.3	3.3	3.3	3.3	3.3	3.3	3.3	3.3
	29	SHC	3.6	3.6	3.6	3.6	3.6	3.6	3.6	3.6	3.6	3.6	3.6	3.6	3.6	3.6	3.6
18		TC	4.4	4.4	4.4	4.4	4.4	4.4	4.4	4.4	4.4	4.4	4.4	4.4	4.4	4.4	4.4
	21	SHC	2.2	2.2	2.2	2.2	2.2	2.2	2.2	2.2	2.2	2.2	2.2	2.2	2.2	2.2	2.2
	23	SHC	2.5	2.5	2.5	2.5	2.5	2.5	2.5	2.5	2.5	2.5	2.5	2.5	2.5	2.5	2.5
	25	SHC	2.9	2.9	2.9	2.9	2.9	2.9	2.9	2.9	2.9	2.9	2.9	2.9	2.9	2.9	2.9
	27	SHC	3.2	3.2	3.2	3.2	3.2	3.2	3.2	3.2	3.2	3.2	3.2	3.2	3.2	3.2	3.2
	29	SHC	3.5	3.5	3.5	3.5	3.5	3.5	3.5	3.5	3.5	3.5	3.5	3.5	3.5	3.5	3.5
	31	SHC	3.8	3.8	3.8	3.8	3.8	3.8	3.8	3.8	3.8	3.8	3.8	3.8	3.8	3.8	3.8
19		TC	4.7	4.7	4.7	4.7	4.7	4.7	4.7	4.7	4.7	4.7	4.7	4.7	4.7	4.7	4.7
	21	SHC	2.1	2.1	2.1	2.1	2.1	2.1	2.1	2.1	2.1	2.1	2.1	2.1	2.1	2.1	2.1
	23	SHC	2.5	2.5	2.5	2.5	2.5	2.5	2.5	2.5	2.5	2.5	2.5	2.5	2.5	2.5	2.5
	25	SHC	2.8	2.8	2.8	2.8	2.8	2.8	2.8	2.8	2.8	2.8	2.8	2.8	2.8	2.8	2.8
	27	SHC	3.1	3.1	3.1	3.1	3.1	3.1	3.1	3.1	3.1	3.1	3.1	3.1	3.1	3.1	3.1
	29	SHC	3.4	3.4	3.4	3.4	3.4	3.4	3.4	3.4	3.4	3.4	3.4	3.4	3.4	3.4	3.4
	31	SHC	3.7	3.7	3.7	3.7	3.7	3.7	3.7	3.7	3.7	3.7	3.7	3.7	3.7	3.7	3.7
20		TC	5.0	5.0	5.0	5.0	5.0	5.0	5.0	5.0	5.0	5.0	5.0	5.0	5.0	5.0	4.9
	23	SHC	2.4	2.4	2.4	2.4	2.4	2.4	2.4	2.4	2.4	2.4	2.4	2.4	2.4	2.3	2.3
	25	SHC	2.7	2.7	2.7	2.7	2.7	2.7	2.7	2.7	2.7	2.7	2.7	2.7	2.7	2.7	2.6
	27	SHC	3.0	3.0	3.0	3.0	3.0	3.0	3.0	3.0	3.0	3.0	3.0	3.0	3.0	3.0	2.9
	29	SHC	3.3	3.3	3.3	3.3	3.3	3.3	3.3	3.3	3.3	3.3	3.3	3.3	3.3	3.3	3.3
	31	SHC	3.6	3.6	3.6	3.6	3.6	3.6	3.6	3.6	3.6	3.6	3.6	3.6	3.6	3.6	3.6
21		TC	5.3	5.3	5.3	5.3	5.3	5.3	5.3	5.3	5.3	5.3	5.3	5.3	5.2	5.1	5.0
	23	SHC	2.3	2.3	2.3	2.3	2.3	2.3	2.3	2.3	2.3	2.3	2.3	2.3	2.2	2.2	2.1
	25	SHC	2.6	2.6	2.6	2.6	2.6	2.6	2.6	2.6	2.6	2.6	2.6	2.6	2.5	2.5	2.4
	27	SHC	2.9	2.9	2.9	2.9	2.9	2.9	2.9	2.9	2.9	2.9	2.9	2.9	2.9	2.8	2.8
	29	SHC	3.2	3.2	3.2	3.2	3.2	3.2	3.2	3.2	3.2	3.2	3.2	3.2	3.2	3.1	3.1
	31	SHC	3.5	3.5	3.5	3.5	3.5	3.5	3.5	3.5	3.5	3.5	3.5	3.5	3.5	3.4	3.4
22		TC	5.6	5.6	5.6	5.6	5.6	5.6	5.6	5.6	5.6	5.6	5.6	5.5	5.4	5.2	5.1
	25	SHC	2.5	2.5	2.5	2.5	2.5	2.5	2.5	2.5	2.5	2.5	2.5	2.4	2.3	2.3	2.2
	27	SHC	2.8	2.8	2.8	2.8	2.8	2.8	2.8	2.8	2.8	2.8	2.8	2.7	2.7	2.6	2.6
	29	SHC	3.1	3.1	3.1	3.1	3.1	3.1	3.1	3.1	3.1	3.1	3.1	3.0	3.0	2.9	2.9
	31	SHC	3.4	3.4	3.4	3.4	3.4	3.4	3.4	3.4	3.4	3.4	3.4	3.4	3.3	3.2	3.2
23		TC	6.0	6.0	6.0	6.0	6.0	6.0	6.0	6.0	6.0	6.0	5.8	5.6	5.5	5.3	5.2
	25	SHC	2.3	2.3	2.3	2.3	2.3	2.3	2.3	2.3	2.3	2.3	2.3	2.2	2.1	2.1	2.0
	27	SHC	2.7	2.7	2.7	2.7	2.7	2.7	2.7	2.7	2.7	2.7	2.6	2.5	2.5	2.4	2.4
	29	SHC	3.0	3.0	3.0	3.0	3.0	3.0	3.0	3.0	3.0	3.0	2.9	2.8	2.8	2.7	2.7
	31	SHC	3.3	3.3	3.3	3.3	3.3	3.3	3.3	3.3	3.3	3.3	3.2	3.2	3.1	3.0	3.0

3. Cooling Capacity of Indoor Unit

● S-56MY1E5

Power supply : 220/230/240V 1phase-50,60Hz TC : Total Cooling Capacity (kW) SHC : Sensible Heat Capacity (kW)

This data is when the indoor unit connects with 16HP outdoor unit.

RATING CAPACITY:		5.6 kW	AIR FLOW RATE: 12.5 m³/min														
EVAPORATOR			CONDENSER														
AIR INTAKE. TEMP			AMBIENT TEMP. (°C)														
W.B.	D.B.		15	17	19	21	23	25	27	29	31	33	35	37	39	41	43
14		TC	3.7	3.7	3.7	3.7	3.7	3.7	3.7	3.7	3.7	3.7	3.7	3.7	3.7	3.7	3.7
	21	SHC	3.0	3.0	3.0	3.0	3.0	3.0	3.0	3.0	3.0	3.0	3.0	3.0	3.0	3.0	3.0
	23	SHC	3.5	3.5	3.5	3.5	3.5	3.5	3.5	3.5	3.5	3.5	3.5	3.5	3.5	3.5	3.5
	25	SHC	3.7	3.7	3.7	3.7	3.7	3.7	3.7	3.7	3.7	3.7	3.7	3.7	3.7	3.7	3.7
	27	SHC	3.7	3.7	3.7	3.7	3.7	3.7	3.7	3.7	3.7	3.7	3.7	3.7	3.7	3.7	3.7
15		TC	4.1	4.1	4.1	4.1	4.1	4.1	4.1	4.1	4.1	4.1	4.1	4.1	4.1	4.1	4.1
	21	SHC	3.0	3.0	3.0	3.0	3.0	3.0	3.0	3.0	3.0	3.0	3.0	3.0	3.0	3.0	3.0
	23	SHC	3.4	3.4	3.4	3.4	3.4	3.4	3.4	3.4	3.4	3.4	3.4	3.4	3.4	3.4	3.4
	25	SHC	3.8	3.8	3.8	3.8	3.8	3.8	3.8	3.8	3.8	3.8	3.8	3.8	3.8	3.8	3.8
	27	SHC	4.1	4.1	4.1	4.1	4.1	4.1	4.1	4.1	4.1	4.1	4.1	4.1	4.1	4.1	4.1
16		TC	4.5	4.5	4.5	4.5	4.5	4.5	4.5	4.5	4.5	4.5	4.5	4.5	4.5	4.5	4.5
	21	SHC	2.9	2.9	2.9	2.9	2.9	2.9	2.9	2.9	2.9	2.9	2.9	2.9	2.9	2.9	2.9
	23	SHC	3.3	3.3	3.3	3.3	3.3	3.3	3.3	3.3	3.3	3.3	3.3	3.3	3.3	3.3	3.3
	25	SHC	3.7	3.7	3.7	3.7	3.7	3.7	3.7	3.7	3.7	3.7	3.7	3.7	3.7	3.7	3.7
	27	SHC	4.1	4.1	4.1	4.1	4.1	4.1	4.1	4.1	4.1	4.1	4.1	4.1	4.1	4.1	4.1
	29	SHC	4.5	4.5	4.5	4.5	4.5	4.5	4.5	4.5	4.5	4.5	4.5	4.5	4.5	4.5	4.5
17		TC	4.9	4.9	4.9	4.9	4.9	4.9	4.9	4.9	4.9	4.9	4.9	4.9	4.9	4.9	4.9
	21	SHC	2.8	2.8	2.8	2.8	2.8	2.8	2.8	2.8	2.8	2.8	2.8	2.8	2.8	2.8	2.8
	23	SHC	3.2	3.2	3.2	3.2	3.2	3.2	3.2	3.2	3.2	3.2	3.2	3.2	3.2	3.2	3.2
	25	SHC	3.6	3.6	3.6	3.6	3.6	3.6	3.6	3.6	3.6	3.6	3.6	3.6	3.6	3.6	3.6
	27	SHC	4.0	4.0	4.0	4.0	4.0	4.0	4.0	4.0	4.0	4.0	4.0	4.0	4.0	4.0	4.0
	29	SHC	4.4	4.4	4.4	4.4	4.4	4.4	4.4	4.4	4.4	4.4	4.4	4.4	4.4	4.4	4.4
18		TC	5.2	5.2	5.2	5.2	5.2	5.2	5.2	5.2	5.2	5.2	5.2	5.2	5.2	5.2	5.2
	21	SHC	2.7	2.7	2.7	2.7	2.7	2.7	2.7	2.7	2.7	2.7	2.7	2.7	2.7	2.7	2.7
	23	SHC	3.1	3.1	3.1	3.1	3.1	3.1	3.1	3.1	3.1	3.1	3.1	3.1	3.1	3.1	3.1
	25	SHC	3.5	3.5	3.5	3.5	3.5	3.5	3.5	3.5	3.5	3.5	3.5	3.5	3.5	3.5	3.5
	27	SHC	3.9	3.9	3.9	3.9	3.9	3.9	3.9	3.9	3.9	3.9	3.9	3.9	3.9	3.9	3.9
	29	SHC	4.3	4.3	4.3	4.3	4.3	4.3	4.3	4.3	4.3	4.3	4.3	4.3	4.3	4.3	4.3
	31	SHC	4.7	4.7	4.7	4.7	4.7	4.7	4.7	4.7	4.7	4.7	4.7	4.7	4.7	4.7	4.7
19		TC	5.6	5.6	5.6	5.6	5.6	5.6	5.6	5.6	5.6	5.6	5.6	5.6	5.6	5.6	5.6
	21	SHC	2.5	2.5	2.5	2.5	2.5	2.5	2.5	2.5	2.5	2.5	2.5	2.5	2.5	2.5	2.5
	23	SHC	2.9	2.9	2.9	2.9	2.9	2.9	2.9	2.9	2.9	2.9	2.9	2.9	2.9	2.9	2.9
	25	SHC	3.4	3.4	3.4	3.4	3.4	3.4	3.4	3.4	3.4	3.4	3.4	3.4	3.4	3.4	3.4
	27	SHC	3.8	3.8	3.8	3.8	3.8	3.8	3.8	3.8	3.8	3.8	3.8	3.8	3.8	3.8	3.8
	29	SHC	4.2	4.2	4.2	4.2	4.2	4.2	4.2	4.2	4.2	4.2	4.2	4.2	4.2	4.2	4.2
	31	SHC	4.6	4.6	4.6	4.6	4.6	4.6	4.6	4.6	4.6	4.6	4.6	4.6	4.6	4.6	4.6
20		TC	6.0	6.0	6.0	6.0	6.0	6.0	6.0	6.0	6.0	6.0	6.0	6.0	6.0	5.9	5.9
	23	SHC	2.8	2.8	2.8	2.8	2.8	2.8	2.8	2.8	2.8	2.8	2.8	2.8	2.8	2.8	2.8
	25	SHC	3.2	3.2	3.2	3.2	3.2	3.2	3.2	3.2	3.2	3.2	3.2	3.2	3.2	3.2	3.2
	27	SHC	3.6	3.6	3.6	3.6	3.6	3.6	3.6	3.6	3.6	3.6	3.6	3.6	3.6	3.6	3.6
	29	SHC	4.0	4.0	4.0	4.0	4.0	4.0	4.0	4.0	4.0	4.0	4.0	4.0	4.0	4.0	4.0
	31	SHC	4.4	4.4	4.4	4.4	4.4	4.4	4.4	4.4	4.4	4.4	4.4	4.4	4.4	4.4	4.4
21		TC	6.3	6.3	6.3	6.3	6.3	6.3	6.3	6.3	6.3	6.3	6.3	6.3	6.3	6.1	6.0
	23	SHC	2.7	2.7	2.7	2.7	2.7	2.7	2.7	2.7	2.7	2.7	2.7	2.7	2.6	2.6	2.5
	25	SHC	3.1	3.1	3.1	3.1	3.1	3.1	3.1	3.1	3.1	3.1	3.1	3.1	3.0	3.0	2.9
	27	SHC	3.5	3.5	3.5	3.5	3.5	3.5	3.5	3.5	3.5	3.5	3.5	3.5	3.5	3.4	3.3
	29	SHC	3.9	3.9	3.9	3.9	3.9	3.9	3.9	3.9	3.9	3.9	3.9	3.9	3.9	3.8	3.7
	31	SHC	4.3	4.3	4.3	4.3	4.3	4.3	4.3	4.3	4.3	4.3	4.3	4.3	4.3	4.2	4.2
22		TC	6.7	6.7	6.7	6.7	6.7	6.7	6.7	6.7	6.7	6.7	6.7	6.6	6.4	6.2	6.1
	25	SHC	2.9	2.9	2.9	2.9	2.9	2.9	2.9	2.9	2.9	2.9	2.9	2.9	2.8	2.7	2.7
	27	SHC	3.3	3.3	3.3	3.3	3.3	3.3	3.3	3.3	3.3	3.3	3.3	3.3	3.2	3.1	3.1
	29	SHC	3.8	3.8	3.8	3.8	3.8	3.8	3.8	3.8	3.8	3.8	3.8	3.7	3.6	3.5	3.5
	31	SHC	4.2	4.2	4.2	4.2	4.2	4.2	4.2	4.2	4.2	4.2	4.2	4.1	4.0	3.9	3.9
23		TC	7.1	7.1	7.1	7.1	7.1	7.1	7.1	7.1	7.1	7.1	6.9	6.7	6.5	6.3	6.2
	25	SHC	2.8	2.8	2.8	2.8	2.8	2.8	2.8	2.8	2.8	2.8	2.7	2.6	2.5	2.5	2.4
	27	SHC	3.2	3.2	3.2	3.2	3.2	3.2	3.2	3.2	3.2	3.2	3.1	3.0	2.9	2.9	2.8
	29	SHC	3.6	3.6	3.6	3.6	3.6	3.6	3.6	3.6	3.6	3.6	3.5	3.4	3.4	3.3	3.2
	31	SHC	4.0	4.0	4.0	4.0	4.0	4.0	4.0	4.0	4.0	4.0	3.9	3.8	3.8	3.7	3.7

3. Cooling Capacity of Indoor Unit

3-3. 4-Way Cassette 60×60 Type (Y2 Type)

- S-22MY2E5

Power supply : 220/230/240V 1phase-50,60Hz TC : Total Cooling Capacity (kW) SHC : Sensible Heat Capacity (kW)
This data is when the indoor unit connects with 16HP outdoor unit.

RATING CAPACITY:		2.2 kW AIR FLOW RATE: 9.1 m³/min															
EVAPORATOR		CONDENSER															
AIR INTAKE. TEMP		AMBIENT TEMP. (°C)															
W.B.	D.B.		15	17	19	21	23	25	27	29	31	33	35	37	39	41	43
14		TC	1.5	1.5	1.5	1.5	1.5	1.5	1.5	1.5	1.5	1.5	1.5	1.5	1.5	1.5	1.5
	21	SHC	1.5	1.5	1.5	1.5	1.5	1.5	1.5	1.5	1.5	1.5	1.5	1.5	1.5	1.5	1.5
	23	SHC	1.5	1.5	1.5	1.5	1.5	1.5	1.5	1.5	1.5	1.5	1.5	1.5	1.5	1.5	1.5
	25	SHC	1.5	1.5	1.5	1.5	1.5	1.5	1.5	1.5	1.5	1.5	1.5	1.5	1.5	1.5	1.5
	27	SHC	1.5	1.5	1.5	1.5	1.5	1.5	1.5	1.5	1.5	1.5	1.5	1.5	1.5	1.5	1.5
15		TC	1.6	1.6	1.6	1.6	1.6	1.6	1.6	1.6	1.6	1.6	1.6	1.6	1.6	1.6	1.6
	21	SHC	1.4	1.4	1.4	1.4	1.4	1.4	1.4	1.4	1.4	1.4	1.4	1.4	1.4	1.4	1.4
	23	SHC	1.6	1.6	1.6	1.6	1.6	1.6	1.6	1.6	1.6	1.6	1.6	1.6	1.6	1.6	1.6
	25	SHC	1.6	1.6	1.6	1.6	1.6	1.6	1.6	1.6	1.6	1.6	1.6	1.6	1.6	1.6	1.6
	27	SHC	1.6	1.6	1.6	1.6	1.6	1.6	1.6	1.6	1.6	1.6	1.6	1.6	1.6	1.6	1.6
16		TC	1.8	1.8	1.8	1.8	1.8	1.8	1.8	1.8	1.8	1.8	1.8	1.8	1.8	1.8	1.8
	21	SHC	1.4	1.4	1.4	1.4	1.4	1.4	1.4	1.4	1.4	1.4	1.4	1.4	1.4	1.4	1.4
	23	SHC	1.6	1.6	1.6	1.6	1.6	1.6	1.6	1.6	1.6	1.6	1.6	1.6	1.6	1.6	1.6
	25	SHC	1.8	1.8	1.8	1.8	1.8	1.8	1.8	1.8	1.8	1.8	1.8	1.8	1.8	1.8	1.8
	27	SHC	1.8	1.8	1.8	1.8	1.8	1.8	1.8	1.8	1.8	1.8	1.8	1.8	1.8	1.8	1.8
	29	SHC	1.8	1.8	1.8	1.8	1.8	1.8	1.8	1.8	1.8	1.8	1.8	1.8	1.8	1.8	1.8
17		TC	1.9	1.9	1.9	1.9	1.9	1.9	1.9	1.9	1.9	1.9	1.9	1.9	1.9	1.9	1.9
	21	SHC	1.3	1.3	1.3	1.3	1.3	1.3	1.3	1.3	1.3	1.3	1.3	1.3	1.3	1.3	1.3
	23	SHC	1.5	1.5	1.5	1.5	1.5	1.5	1.5	1.5	1.5	1.5	1.5	1.5	1.5	1.5	1.5
	25	SHC	1.7	1.7	1.7	1.7	1.7	1.7	1.7	1.7	1.7	1.7	1.7	1.7	1.7	1.7	1.7
	27	SHC	1.9	1.9	1.9	1.9	1.9	1.9	1.9	1.9	1.9	1.9	1.9	1.9	1.9	1.9	1.9
	29	SHC	1.9	1.9	1.9	1.9	1.9	1.9	1.9	1.9	1.9	1.9	1.9	1.9	1.9	1.9	1.9
18		TC	2.1	2.1	2.1	2.1	2.1	2.1	2.1	2.1	2.1	2.1	2.1	2.1	2.1	2.1	2.1
	21	SHC	1.3	1.3	1.3	1.3	1.3	1.3	1.3	1.3	1.3	1.3	1.3	1.3	1.3	1.3	1.3
	23	SHC	1.5	1.5	1.5	1.5	1.5	1.5	1.5	1.5	1.5	1.5	1.5	1.5	1.5	1.5	1.5
	25	SHC	1.7	1.7	1.7	1.7	1.7	1.7	1.7	1.7	1.7	1.7	1.7	1.7	1.7	1.7	1.7
	27	SHC	1.9	1.9	1.9	1.9	1.9	1.9	1.9	1.9	1.9	1.9	1.9	1.9	1.9	1.9	1.9
	29	SHC	2.1	2.1	2.1	2.1	2.1	2.1	2.1	2.1	2.1	2.1	2.1	2.1	2.1	2.1	2.1
	31	SHC	2.1	2.1	2.1	2.1	2.1	2.1	2.1	2.1	2.1	2.1	2.1	2.1	2.1	2.1	2.1
19		TC	2.2	2.2	2.2	2.2	2.2	2.2	2.2	2.2	2.2	2.2	2.2	2.2	2.2	2.2	2.2
	21	SHC	1.2	1.2	1.2	1.2	1.2	1.2	1.2	1.2	1.2	1.2	1.2	1.2	1.2	1.2	1.2
	23	SHC	1.4	1.4	1.4	1.4	1.4	1.4	1.4	1.4	1.4	1.4	1.4	1.4	1.4	1.4	1.4
	25	SHC	1.6	1.6	1.6	1.6	1.6	1.6	1.6	1.6	1.6	1.6	1.6	1.6	1.6	1.6	1.6
	27	SHC	1.8	1.8	1.8	1.8	1.8	1.8	1.8	1.8	1.8	1.8	1.8	1.8	1.8	1.8	1.8
	29	SHC	2.0	2.0	2.0	2.0	2.0	2.0	2.0	2.0	2.0	2.0	2.0	2.0	2.0	2.0	2.0
	31	SHC	2.2	2.2	2.2	2.2	2.2	2.2	2.2	2.2	2.2	2.2	2.2	2.2	2.2	2.2	2.2
20		TC	2.3	2.3	2.3	2.3	2.3	2.3	2.3	2.3	2.3	2.3	2.3	2.3	2.3	2.3	2.3
	23	SHC	1.3	1.3	1.3	1.3	1.3	1.3	1.3	1.3	1.3	1.3	1.3	1.3	1.3	1.3	1.3
	25	SHC	1.5	1.5	1.5	1.5	1.5	1.5	1.5	1.5	1.5	1.5	1.5	1.5	1.5	1.5	1.5
	27	SHC	1.7	1.7	1.7	1.7	1.7	1.7	1.7	1.7	1.7	1.7	1.7	1.7	1.7	1.7	1.7
	29	SHC	1.9	1.9	1.9	1.9	1.9	1.9	1.9	1.9	1.9	1.9	1.9	1.9	1.9	1.9	1.9
	31	SHC	2.1	2.1	2.1	2.1	2.1	2.1	2.1	2.1	2.1	2.1	2.1	2.1	2.1	2.1	2.1
21		TC	2.5	2.5	2.5	2.5	2.5	2.5	2.5	2.5	2.5	2.5	2.5	2.5	2.5	2.4	2.3
	23	SHC	1.3	1.3	1.3	1.3	1.3	1.3	1.3	1.3	1.3	1.3	1.3	1.3	1.2	1.2	1.2
	25	SHC	1.5	1.5	1.5	1.5	1.5	1.5	1.5	1.5	1.5	1.5	1.5	1.5	1.4	1.4	1.4
	27	SHC	1.7	1.7	1.7	1.7	1.7	1.7	1.7	1.7	1.7	1.7	1.7	1.7	1.6	1.6	1.6
	29	SHC	1.9	1.9	1.9	1.9	1.9	1.9	1.9	1.9	1.9	1.9	1.9	1.9	1.8	1.8	1.8
	31	SHC	2.1	2.1	2.1	2.1	2.1	2.1	2.1	2.1	2.1	2.1	2.1	2.1	2.0	2.0	2.0
22		TC	2.6	2.6	2.6	2.6	2.6	2.6	2.6	2.6	2.6	2.6	2.6	2.6	2.5	2.4	2.4
	25	SHC	1.4	1.4	1.4	1.4	1.4	1.4	1.4	1.4	1.4	1.4	1.4	1.4	1.3	1.3	1.3
	27	SHC	1.6	1.6	1.6	1.6	1.6	1.6	1.6	1.6	1.6	1.6	1.6	1.6	1.5	1.5	1.5
	29	SHC	1.8	1.8	1.8	1.8	1.8	1.8	1.8	1.8	1.8	1.8	1.8	1.8	1.7	1.7	1.7
	31	SHC	2.0	2.0	2.0	2.0	2.0	2.0	2.0	2.0	2.0	2.0	2.0	2.0	1.9	1.9	1.9
23		TC	2.8	2.8	2.8	2.8	2.8	2.8	2.8	2.8	2.8	2.8	2.7	2.6	2.6	2.5	2.4
	25	SHC	1.3	1.3	1.3	1.3	1.3	1.3	1.3	1.3	1.3	1.3	1.3	1.2	1.2	1.2	1.1
	27	SHC	1.5	1.5	1.5	1.5	1.5	1.5	1.5	1.5	1.5	1.5	1.5	1.4	1.4	1.4	1.3
	29	SHC	1.7	1.7	1.7	1.7	1.7	1.7	1.7	1.7	1.7	1.7	1.7	1.6	1.6	1.6	1.5
	31	SHC	1.9	1.9	1.9	1.9	1.9	1.9	1.9	1.9	1.9	1.9	1.9	1.8	1.8	1.8	1.7

3. Cooling Capacity of Indoor Unit

- S-28MY2E5

Power supply : 220/230/240V 1phase-50,60Hz TC : Total Cooling Capacity (kW) SHC : Sensible Heat Capacity (kW)
This data is when the indoor unit connects with 16HP outdoor unit.

RATING CAPACITY:		2.8 kW	AIR FLOW RATE: 9.3 m³/min														
EVAPORATOR			CONDENSER														
AIR INTAKE. TEMP			AMBIENT TEMP. (°C)														
W.B.	D.B.		15	17	19	21	23	25	27	29	31	33	35	37	39	41	43
14		TC	1.9	1.9	1.9	1.9	1.9	1.9	1.9	1.9	1.9	1.9	1.9	1.9	1.9	1.9	1.9
	21	SHC	1.8	1.8	1.8	1.8	1.8	1.8	1.8	1.8	1.8	1.8	1.8	1.8	1.8	1.8	1.8
	23	SHC	1.9	1.9	1.9	1.9	1.9	1.9	1.9	1.9	1.9	1.9	1.9	1.9	1.9	1.9	1.9
	25	SHC	1.9	1.9	1.9	1.9	1.9	1.9	1.9	1.9	1.9	1.9	1.9	1.9	1.9	1.9	1.9
	27	SHC	1.9	1.9	1.9	1.9	1.9	1.9	1.9	1.9	1.9	1.9	1.9	1.9	1.9	1.9	1.9
15		TC	2.1	2.1	2.1	2.1	2.1	2.1	2.1	2.1	2.1	2.1	2.1	2.1	2.1	2.1	2.1
	21	SHC	1.7	1.7	1.7	1.7	1.7	1.7	1.7	1.7	1.7	1.7	1.7	1.7	1.7	1.7	1.7
	23	SHC	2.0	2.0	2.0	2.0	2.0	2.0	2.0	2.0	2.0	2.0	2.0	2.0	2.0	2.0	2.0
	25	SHC	2.1	2.1	2.1	2.1	2.1	2.1	2.1	2.1	2.1	2.1	2.1	2.1	2.1	2.1	2.1
	27	SHC	2.1	2.1	2.1	2.1	2.1	2.1	2.1	2.1	2.1	2.1	2.1	2.1	2.1	2.1	2.1
16		TC	2.2	2.2	2.2	2.2	2.2	2.2	2.2	2.2	2.2	2.2	2.2	2.2	2.2	2.2	2.2
	21	SHC	1.6	1.6	1.6	1.6	1.6	1.6	1.6	1.6	1.6	1.6	1.6	1.6	1.6	1.6	1.6
	23	SHC	1.9	1.9	1.9	1.9	1.9	1.9	1.9	1.9	1.9	1.9	1.9	1.9	1.9	1.9	1.9
	25	SHC	2.2	2.2	2.2	2.2	2.2	2.2	2.2	2.2	2.2	2.2	2.2	2.2	2.2	2.2	2.2
	27	SHC	2.2	2.2	2.2	2.2	2.2	2.2	2.2	2.2	2.2	2.2	2.2	2.2	2.2	2.2	2.2
	29	SHC	2.2	2.2	2.2	2.2	2.2	2.2	2.2	2.2	2.2	2.2	2.2	2.2	2.2	2.2	2.2
17		TC	2.4	2.4	2.4	2.4	2.4	2.4	2.4	2.4	2.4	2.4	2.4	2.4	2.4	2.4	2.4
	21	SHC	1.6	1.6	1.6	1.6	1.6	1.6	1.6	1.6	1.6	1.6	1.6	1.6	1.6	1.6	1.6
	23	SHC	1.8	1.8	1.8	1.8	1.8	1.8	1.8	1.8	1.8	1.8	1.8	1.8	1.8	1.8	1.8
	25	SHC	2.1	2.1	2.1	2.1	2.1	2.1	2.1	2.1	2.1	2.1	2.1	2.1	2.1	2.1	2.1
	27	SHC	2.3	2.3	2.3	2.3	2.3	2.3	2.3	2.3	2.3	2.3	2.3	2.3	2.3	2.3	2.3
	29	SHC	2.4	2.4	2.4	2.4	2.4	2.4	2.4	2.4	2.4	2.4	2.4	2.4	2.4	2.4	2.4
18		TC	2.6	2.6	2.6	2.6	2.6	2.6	2.6	2.6	2.6	2.6	2.6	2.6	2.6	2.6	2.6
	21	SHC	1.5	1.5	1.5	1.5	1.5	1.5	1.5	1.5	1.5	1.5	1.5	1.5	1.5	1.5	1.5
	23	SHC	1.7	1.7	1.7	1.7	1.7	1.7	1.7	1.7	1.7	1.7	1.7	1.7	1.7	1.7	1.7
	25	SHC	2.0	2.0	2.0	2.0	2.0	2.0	2.0	2.0	2.0	2.0	2.0	2.0	2.0	2.0	2.0
	27	SHC	2.3	2.3	2.3	2.3	2.3	2.3	2.3	2.3	2.3	2.3	2.3	2.3	2.3	2.3	2.3
	29	SHC	2.5	2.5	2.5	2.5	2.5	2.5	2.5	2.5	2.5	2.5	2.5	2.5	2.5	2.5	2.5
	31	SHC	2.6	2.6	2.6	2.6	2.6	2.6	2.6	2.6	2.6	2.6	2.6	2.6	2.6	2.6	2.6
19		TC	2.8	2.8	2.8	2.8	2.8	2.8	2.8	2.8	2.8	2.8	2.8	2.8	2.8	2.8	2.8
	21	SHC	1.4	1.4	1.4	1.4	1.4	1.4	1.4	1.4	1.4	1.4	1.4	1.4	1.4	1.4	1.4
	23	SHC	1.7	1.7	1.7	1.7	1.7	1.7	1.7	1.7	1.7	1.7	1.7	1.7	1.7	1.7	1.7
	25	SHC	1.9	1.9	1.9	1.9	1.9	1.9	1.9	1.9	1.9	1.9	1.9	1.9	1.9	1.9	1.9
	27	SHC	2.2	2.2	2.2	2.2	2.2	2.2	2.2	2.2	2.2	2.2	2.2	2.2	2.2	2.2	2.2
	29	SHC	2.4	2.4	2.4	2.4	2.4	2.4	2.4	2.4	2.4	2.4	2.4	2.4	2.4	2.4	2.4
	31	SHC	2.7	2.7	2.7	2.7	2.7	2.7	2.7	2.7	2.7	2.7	2.7	2.7	2.7	2.7	2.7
20		TC	3.0	3.0	3.0	3.0	3.0	3.0	3.0	3.0	3.0	3.0	3.0	3.0	3.0	3.0	2.9
	23	SHC	1.6	1.6	1.6	1.6	1.6	1.6	1.6	1.6	1.6	1.6	1.6	1.6	1.6	1.6	1.5
	25	SHC	1.8	1.8	1.8	1.8	1.8	1.8	1.8	1.8	1.8	1.8	1.8	1.8	1.8	1.8	1.8
	27	SHC	2.1	2.1	2.1	2.1	2.1	2.1	2.1	2.1	2.1	2.1	2.1	2.1	2.1	2.1	2.1
	29	SHC	2.3	2.3	2.3	2.3	2.3	2.3	2.3	2.3	2.3	2.3	2.3	2.3	2.3	2.3	2.3
	31	SHC	2.6	2.6	2.6	2.6	2.6	2.6	2.6	2.6	2.6	2.6	2.6	2.6	2.6	2.6	2.6
21		TC	3.2	3.2	3.2	3.2	3.2	3.2	3.2	3.2	3.2	3.2	3.2	3.2	3.1	3.0	3.0
	23	SHC	1.5	1.5	1.5	1.5	1.5	1.5	1.5	1.5	1.5	1.5	1.5	1.5	1.4	1.4	1.4
	25	SHC	1.7	1.7	1.7	1.7	1.7	1.7	1.7	1.7	1.7	1.7	1.7	1.7	1.7	1.7	1.6
	27	SHC	2.0	2.0	2.0	2.0	2.0	2.0	2.0	2.0	2.0	2.0	2.0	2.0	2.0	1.9	1.9
	29	SHC	2.2	2.2	2.2	2.2	2.2	2.2	2.2	2.2	2.2	2.2	2.2	2.2	2.2	2.2	2.2
	31	SHC	2.5	2.5	2.5	2.5	2.5	2.5	2.5	2.5	2.5	2.5	2.5	2.5	2.5	2.4	2.4
22		TC	3.4	3.4	3.4	3.4	3.4	3.4	3.4	3.4	3.4	3.4	3.4	3.3	3.2	3.1	3.1
	25	SHC	1.6	1.6	1.6	1.6	1.6	1.6	1.6	1.6	1.6	1.6	1.6	1.6	1.6	1.5	1.5
	27	SHC	1.9	1.9	1.9	1.9	1.9	1.9	1.9	1.9	1.9	1.9	1.9	1.9	1.8	1.8	1.8
	29	SHC	2.1	2.1	2.1	2.1	2.1	2.1	2.1	2.1	2.1	2.1	2.1	2.1	2.1	2.0	2.0
	31	SHC	2.4	2.4	2.4	2.4	2.4	2.4	2.4	2.4	2.4	2.4	2.4	2.4	2.3	2.3	2.3
23		TC	3.5	3.5	3.5	3.5	3.5	3.5	3.5	3.5	3.5	3.5	3.4	3.3	3.3	3.2	3.1
	25	SHC	1.5	1.5	1.5	1.5	1.5	1.5	1.5	1.5	1.5	1.5	1.5	1.4	1.4	1.4	1.3
	27	SHC	1.8	1.8	1.8	1.8	1.8	1.8	1.8	1.8	1.8	1.8	1.7	1.7	1.7	1.6	1.6
	29	SHC	2.0	2.0	2.0	2.0	2.0	2.0	2.0	2.0	2.0	2.0	2.0	2.0	1.9	1.9	1.9
	31	SHC	2.3	2.3	2.3	2.3	2.3	2.3	2.3	2.3	2.3	2.3	2.3	2.2	2.2	2.1	2.1

3. Cooling Capacity of Indoor Unit

- S-36MY2E5

Power supply : 220/230/240V 1phase-50,60Hz TC : Total Cooling Capacity (kW) SHC : Sensible Heat Capacity (kW)

This data is when the indoor unit connects with 16HP outdoor unit.

RATING CAPACITY:		3.6 kW	AIR FLOW RATE: 9.7 m³/min														
EVAPORATOR			CONDENSER														
AIR INTAKE. TEMP			AMBIENT TEMP. (°C)														
W.B.	D.B.		15	17	19	21	23	25	27	29	31	33	35	37	39	41	43
14		TC	2.4	2.4	2.4	2.4	2.4	2.4	2.4	2.4	2.4	2.4	2.4	2.4	2.4	2.4	2.4
	21	SHC	2.2	2.2	2.2	2.2	2.2	2.2	2.2	2.2	2.2	2.2	2.2	2.2	2.2	2.2	2.2
	23	SHC	2.4	2.4	2.4	2.4	2.4	2.4	2.4	2.4	2.4	2.4	2.4	2.4	2.4	2.4	2.4
	25	SHC	2.4	2.4	2.4	2.4	2.4	2.4	2.4	2.4	2.4	2.4	2.4	2.4	2.4	2.4	2.4
	27	SHC	2.4	2.4	2.4	2.4	2.4	2.4	2.4	2.4	2.4	2.4	2.4	2.4	2.4	2.4	2.4
15		TC	2.6	2.6	2.6	2.6	2.6	2.6	2.6	2.6	2.6	2.6	2.6	2.6	2.6	2.6	2.6
	21	SHC	2.1	2.1	2.1	2.1	2.1	2.1	2.1	2.1	2.1	2.1	2.1	2.1	2.1	2.1	2.1
	23	SHC	2.4	2.4	2.4	2.4	2.4	2.4	2.4	2.4	2.4	2.4	2.4	2.4	2.4	2.4	2.4
	25	SHC	2.6	2.6	2.6	2.6	2.6	2.6	2.6	2.6	2.6	2.6	2.6	2.6	2.6	2.6	2.6
	27	SHC	2.6	2.6	2.6	2.6	2.6	2.6	2.6	2.6	2.6	2.6	2.6	2.6	2.6	2.6	2.6
16		TC	2.9	2.9	2.9	2.9	2.9	2.9	2.9	2.9	2.9	2.9	2.9	2.9	2.9	2.9	2.9
	21	SHC	2.0	2.0	2.0	2.0	2.0	2.0	2.0	2.0	2.0	2.0	2.0	2.0	2.0	2.0	2.0
	23	SHC	2.3	2.3	2.3	2.3	2.3	2.3	2.3	2.3	2.3	2.3	2.3	2.3	2.3	2.3	2.3
	25	SHC	2.6	2.6	2.6	2.6	2.6	2.6	2.6	2.6	2.6	2.6	2.6	2.6	2.6	2.6	2.6
	27	SHC	2.9	2.9	2.9	2.9	2.9	2.9	2.9	2.9	2.9	2.9	2.9	2.9	2.9	2.9	2.9
	29	SHC	2.9	2.9	2.9	2.9	2.9	2.9	2.9	2.9	2.9	2.9	2.9	2.9	2.9	2.9	2.9
17		TC	3.1	3.1	3.1	3.1	3.1	3.1	3.1	3.1	3.1	3.1	3.1	3.1	3.1	3.1	3.1
	21	SHC	1.9	1.9	1.9	1.9	1.9	1.9	1.9	1.9	1.9	1.9	1.9	1.9	1.9	1.9	1.9
	23	SHC	2.2	2.2	2.2	2.2	2.2	2.2	2.2	2.2	2.2	2.2	2.2	2.2	2.2	2.2	2.2
	25	SHC	2.5	2.5	2.5	2.5	2.5	2.5	2.5	2.5	2.5	2.5	2.5	2.5	2.5	2.5	2.5
	27	SHC	2.8	2.8	2.8	2.8	2.8	2.8	2.8	2.8	2.8	2.8	2.8	2.8	2.8	2.8	2.8
	29	SHC	3.1	3.1	3.1	3.1	3.1	3.1	3.1	3.1	3.1	3.1	3.1	3.1	3.1	3.1	3.1
18		TC	3.4	3.4	3.4	3.4	3.4	3.4	3.4	3.4	3.4	3.4	3.4	3.4	3.4	3.4	3.4
	21	SHC	1.8	1.8	1.8	1.8	1.8	1.8	1.8	1.8	1.8	1.8	1.8	1.8	1.8	1.8	1.8
	23	SHC	2.1	2.1	2.1	2.1	2.1	2.1	2.1	2.1	2.1	2.1	2.1	2.1	2.1	2.1	2.1
	25	SHC	2.4	2.4	2.4	2.4	2.4	2.4	2.4	2.4	2.4	2.4	2.4	2.4	2.4	2.4	2.4
	27	SHC	2.7	2.7	2.7	2.7	2.7	2.7	2.7	2.7	2.7	2.7	2.7	2.7	2.7	2.7	2.7
	29	SHC	3.1	3.1	3.1	3.1	3.1	3.1	3.1	3.1	3.1	3.1	3.1	3.1	3.1	3.1	3.1
	31	SHC	3.4	3.4	3.4	3.4	3.4	3.4	3.4	3.4	3.4	3.4	3.4	3.4	3.4	3.4	3.4
19		TC	3.6	3.6	3.6	3.6	3.6	3.6	3.6	3.6	3.6	3.6	3.6	3.6	3.6	3.6	3.6
	21	SHC	1.6	1.6	1.6	1.6	1.6	1.6	1.6	1.6	1.6	1.6	1.6	1.6	1.6	1.6	1.6
	23	SHC	2.0	2.0	2.0	2.0	2.0	2.0	2.0	2.0	2.0	2.0	2.0	2.0	2.0	2.0	2.0
	25	SHC	2.3	2.3	2.3	2.3	2.3	2.3	2.3	2.3	2.3	2.3	2.3	2.3	2.3	2.3	2.3
	27	SHC	2.6	2.6	2.6	2.6	2.6	2.6	2.6	2.6	2.6	2.6	2.6	2.6	2.6	2.6	2.6
	29	SHC	2.9	2.9	2.9	2.9	2.9	2.9	2.9	2.9	2.9	2.9	2.9	2.9	2.9	2.9	2.9
	31	SHC	3.3	3.3	3.3	3.3	3.3	3.3	3.3	3.3	3.3	3.3	3.3	3.3	3.3	3.3	3.3
20		TC	3.8	3.8	3.8	3.8	3.8	3.8	3.8	3.8	3.8	3.8	3.8	3.8	3.8	3.8	3.8
	23	SHC	1.8	1.8	1.8	1.8	1.8	1.8	1.8	1.8	1.8	1.8	1.8	1.8	1.8	1.8	1.8
	25	SHC	2.2	2.2	2.2	2.2	2.2	2.2	2.2	2.2	2.2	2.2	2.2	2.2	2.2	2.2	2.1
	27	SHC	2.5	2.5	2.5	2.5	2.5	2.5	2.5	2.5	2.5	2.5	2.5	2.5	2.5	2.5	2.5
	29	SHC	2.8	2.8	2.8	2.8	2.8	2.8	2.8	2.8	2.8	2.8	2.8	2.8	2.8	2.8	2.8
	31	SHC	3.1	3.1	3.1	3.1	3.1	3.1	3.1	3.1	3.1	3.1	3.1	3.1	3.1	3.1	3.1
21		TC	4.1	4.1	4.1	4.1	4.1	4.1	4.1	4.1	4.1	4.1	4.1	4.1	4.0	3.9	3.8
	23	SHC	1.7	1.7	1.7	1.7	1.7	1.7	1.7	1.7	1.7	1.7	1.7	1.7	1.7	1.7	1.6
	25	SHC	2.0	2.0	2.0	2.0	2.0	2.0	2.0	2.0	2.0	2.0	2.0	2.0	2.0	2.0	2.0
	27	SHC	2.4	2.4	2.4	2.4	2.4	2.4	2.4	2.4	2.4	2.4	2.4	2.4	2.3	2.3	2.3
	29	SHC	2.7	2.7	2.7	2.7	2.7	2.7	2.7	2.7	2.7	2.7	2.7	2.7	2.7	2.6	2.6
	31	SHC	3.0	3.0	3.0	3.0	3.0	3.0	3.0	3.0	3.0	3.0	3.0	3.0	3.0	3.0	2.9
22		TC	4.3	4.3	4.3	4.3	4.3	4.3	4.3	4.3	4.3	4.3	4.3	4.2	4.1	4.0	3.9
	25	SHC	1.9	1.9	1.9	1.9	1.9	1.9	1.9	1.9	1.9	1.9	1.9	1.9	1.8	1.8	1.8
	27	SHC	2.2	2.2	2.2	2.2	2.2	2.2	2.2	2.2	2.2	2.2	2.2	2.2	2.2	2.1	2.1
	29	SHC	2.6	2.6	2.6	2.6	2.6	2.6	2.6	2.6	2.6	2.6	2.6	2.5	2.5	2.4	2.4
	31	SHC	2.9	2.9	2.9	2.9	2.9	2.9	2.9	2.9	2.9	2.9	2.9	2.9	2.8	2.8	2.7
23		TC	4.6	4.6	4.6	4.6	4.6	4.6	4.6	4.6	4.6	4.6	4.4	4.3	4.2	4.1	4.0
	25	SHC	1.8	1.8	1.8	1.8	1.8	1.8	1.8	1.8	1.8	1.8	1.7	1.7	1.6	1.6	1.6
	27	SHC	2.1	2.1	2.1	2.1	2.1	2.1	2.1	2.1	2.1	2.1	2.1	2.0	2.0	1.9	1.9
	29	SHC	2.4	2.4	2.4	2.4	2.4	2.4	2.4	2.4	2.4	2.4	2.4	2.3	2.3	2.3	2.2
	31	SHC	2.8	2.8	2.8	2.8	2.8	2.8	2.8	2.8	2.8	2.8	2.7	2.7	2.6	2.6	2.6

3. Cooling Capacity of Indoor Unit

- S-45MY2E5

Power supply : 220/230/240V 1phase-50,60Hz TC : Total Cooling Capacity (kW) SHC : Sensible Heat Capacity (kW)
This data is when the indoor unit connects with 16HP outdoor unit.

RATING CAPACITY:		4.5 kW	AIR FLOW RATE:10.0 m³/min														
EVAPORATOR			CONDENSER														
AIR INTAKE. TEMP			AMBIENT TEMP. (°C)														
W.B.	D.B.		15	17	19	21	23	25	27	29	31	33	35	37	39	41	43
14		TC	3.0	3.0	3.0	3.0	3.0	3.0	3.0	3.0	3.0	3.0	3.0	3.0	3.0	3.0	3.0
	21	SHC	2.4	2.4	2.4	2.4	2.4	2.4	2.4	2.4	2.4	2.4	2.4	2.4	2.4	2.4	2.4
	23	SHC	2.7	2.7	2.7	2.7	2.7	2.7	2.7	2.7	2.7	2.7	2.7	2.7	2.7	2.7	2.7
	25	SHC	3.0	3.0	3.0	3.0	3.0	3.0	3.0	3.0	3.0	3.0	3.0	3.0	3.0	3.0	3.0
	27	SHC	3.0	3.0	3.0	3.0	3.0	3.0	3.0	3.0	3.0	3.0	3.0	3.0	3.0	3.0	3.0
15		TC	3.3	3.3	3.3	3.3	3.3	3.3	3.3	3.3	3.3	3.3	3.3	3.3	3.3	3.3	3.3
	21	SHC	2.3	2.3	2.3	2.3	2.3	2.3	2.3	2.3	2.3	2.3	2.3	2.3	2.3	2.3	2.3
	23	SHC	2.6	2.6	2.6	2.6	2.6	2.6	2.6	2.6	2.6	2.6	2.6	2.6	2.6	2.6	2.6
	25	SHC	2.9	2.9	2.9	2.9	2.9	2.9	2.9	2.9	2.9	2.9	2.9	2.9	2.9	2.9	2.9
	27	SHC	3.2	3.2	3.2	3.2	3.2	3.2	3.2	3.2	3.2	3.2	3.2	3.2	3.2	3.2	3.2
16		TC	3.6	3.6	3.6	3.6	3.6	3.6	3.6	3.6	3.6	3.6	3.6	3.6	3.6	3.6	3.6
	21	SHC	2.3	2.3	2.3	2.3	2.3	2.3	2.3	2.3	2.3	2.3	2.3	2.3	2.3	2.3	2.3
	23	SHC	2.6	2.6	2.6	2.6	2.6	2.6	2.6	2.6	2.6	2.6	2.6	2.6	2.6	2.6	2.6
	25	SHC	2.9	2.9	2.9	2.9	2.9	2.9	2.9	2.9	2.9	2.9	2.9	2.9	2.9	2.9	2.9
	27	SHC	3.2	3.2	3.2	3.2	3.2	3.2	3.2	3.2	3.2	3.2	3.2	3.2	3.2	3.2	3.2
	29	SHC	3.5	3.5	3.5	3.5	3.5	3.5	3.5	3.5	3.5	3.5	3.5	3.5	3.5	3.5	3.5
17		TC	3.9	3.9	3.9	3.9	3.9	3.9	3.9	3.9	3.9	3.9	3.9	3.9	3.9	3.9	3.9
	21	SHC	2.2	2.2	2.2	2.2	2.2	2.2	2.2	2.2	2.2	2.2	2.2	2.2	2.2	2.2	2.2
	23	SHC	2.5	2.5	2.5	2.5	2.5	2.5	2.5	2.5	2.5	2.5	2.5	2.5	2.5	2.5	2.5
	25	SHC	2.8	2.8	2.8	2.8	2.8	2.8	2.8	2.8	2.8	2.8	2.8	2.8	2.8	2.8	2.8
	27	SHC	3.1	3.1	3.1	3.1	3.1	3.1	3.1	3.1	3.1	3.1	3.1	3.1	3.1	3.1	3.1
	29	SHC	3.4	3.4	3.4	3.4	3.4	3.4	3.4	3.4	3.4	3.4	3.4	3.4	3.4	3.4	3.4
18		TC	4.2	4.2	4.2	4.2	4.2	4.2	4.2	4.2	4.2	4.2	4.2	4.2	4.2	4.2	4.2
	21	SHC	2.1	2.1	2.1	2.1	2.1	2.1	2.1	2.1	2.1	2.1	2.1	2.1	2.1	2.1	2.1
	23	SHC	2.4	2.4	2.4	2.4	2.4	2.4	2.4	2.4	2.4	2.4	2.4	2.4	2.4	2.4	2.4
	25	SHC	2.7	2.7	2.7	2.7	2.7	2.7	2.7	2.7	2.7	2.7	2.7	2.7	2.7	2.7	2.7
	27	SHC	3.0	3.0	3.0	3.0	3.0	3.0	3.0	3.0	3.0	3.0	3.0	3.0	3.0	3.0	3.0
	29	SHC	3.3	3.3	3.3	3.3	3.3	3.3	3.3	3.3	3.3	3.3	3.3	3.3	3.3	3.3	3.3
	31	SHC	3.7	3.7	3.7	3.7	3.7	3.7	3.7	3.7	3.7	3.7	3.7	3.7	3.7	3.7	3.7
19		TC	4.5	4.5	4.5	4.5	4.5	4.5	4.5	4.5	4.5	4.5	4.5	4.5	4.5	4.5	4.5
	21	SHC	2.0	2.0	2.0	2.0	2.0	2.0	2.0	2.0	2.0	2.0	2.0	2.0	2.0	2.0	2.0
	23	SHC	2.4	2.4	2.4	2.4	2.4	2.4	2.4	2.4	2.4	2.4	2.4	2.4	2.4	2.4	2.4
	25	SHC	2.7	2.7	2.7	2.7	2.7	2.7	2.7	2.7	2.7	2.7	2.7	2.7	2.7	2.7	2.7
	27	SHC	3.0	3.0	3.0	3.0	3.0	3.0	3.0	3.0	3.0	3.0	3.0	3.0	3.0	3.0	3.0
	29	SHC	3.3	3.3	3.3	3.3	3.3	3.3	3.3	3.3	3.3	3.3	3.3	3.3	3.3	3.3	3.3
	31	SHC	3.6	3.6	3.6	3.6	3.6	3.6	3.6	3.6	3.6	3.6	3.6	3.6	3.6	3.6	3.6
20		TC	4.8	4.8	4.8	4.8	4.8	4.8	4.8	4.8	4.8	4.8	4.8	4.8	4.8	4.8	4.7
	23	SHC	2.3	2.3	2.3	2.3	2.3	2.3	2.3	2.3	2.3	2.3	2.3	2.3	2.3	2.2	2.2
	25	SHC	2.6	2.6	2.6	2.6	2.6	2.6	2.6	2.6	2.6	2.6	2.6	2.6	2.6	2.6	2.5
	27	SHC	2.9	2.9	2.9	2.9	2.9	2.9	2.9	2.9	2.9	2.9	2.9	2.9	2.9	2.9	2.8
	29	SHC	3.2	3.2	3.2	3.2	3.2	3.2	3.2	3.2	3.2	3.2	3.2	3.2	3.2	3.2	3.1
	31	SHC	3.5	3.5	3.5	3.5	3.5	3.5	3.5	3.5	3.5	3.5	3.5	3.5	3.5	3.5	3.4
21		TC	5.1	5.1	5.1	5.1	5.1	5.1	5.1	5.1	5.1	5.1	5.1	5.1	5.0	4.9	4.8
	23	SHC	2.2	2.2	2.2	2.2	2.2	2.2	2.2	2.2	2.2	2.2	2.2	2.2	2.1	2.1	2.0
	25	SHC	2.5	2.5	2.5	2.5	2.5	2.5	2.5	2.5	2.5	2.5	2.5	2.5	2.4	2.4	2.3
	27	SHC	2.8	2.8	2.8	2.8	2.8	2.8	2.8	2.8	2.8	2.8	2.8	2.8	2.7	2.7	2.6
	29	SHC	3.1	3.1	3.1	3.1	3.1	3.1	3.1	3.1	3.1	3.1	3.1	3.1	3.0	3.0	2.9
	31	SHC	3.4	3.4	3.4	3.4	3.4	3.4	3.4	3.4	3.4	3.4	3.4	3.4	3.3	3.3	3.3
22		TC	5.4	5.4	5.4	5.4	5.4	5.4	5.4	5.4	5.4	5.4	5.4	5.3	5.1	5.0	4.9
	25	SHC	2.4	2.4	2.4	2.4	2.4	2.4	2.4	2.4	2.4	2.4	2.4	2.3	2.2	2.2	2.1
	27	SHC	2.7	2.7	2.7	2.7	2.7	2.7	2.7	2.7	2.7	2.7	2.7	2.6	2.5	2.5	2.5
	29	SHC	3.0	3.0	3.0	3.0	3.0	3.0	3.0	3.0	3.0	3.0	3.0	2.9	2.9	2.8	2.8
	31	SHC	3.3	3.3	3.3	3.3	3.3	3.3	3.3	3.3	3.3	3.3	3.3	3.2	3.2	3.1	3.1
23		TC	5.7	5.7	5.7	5.7	5.7	5.7	5.7	5.7	5.7	5.7	5.5	5.4	5.2	5.1	5.0
	25	SHC	2.2	2.2	2.2	2.2	2.2	2.2	2.2	2.2	2.2	2.2	2.2	2.1	2.0	2.0	2.0
	27	SHC	2.5	2.5	2.5	2.5	2.5	2.5	2.5	2.5	2.5	2.5	2.5	2.4	2.3	2.3	2.3
	29	SHC	2.9	2.9	2.9	2.9	2.9	2.9	2.9	2.9	2.9	2.9	2.8	2.7	2.7	2.6	2.6
	31	SHC	3.2	3.2	3.2	3.2	3.2	3.2	3.2	3.2	3.2	3.2	3.1	3.0	3.0	2.9	2.9

3. Cooling Capacity of Indoor Unit

- S-56MY2E5

Power supply : 220/230/240V 1phase-50,60Hz TC : Total Cooling Capacity (kW) SHC : Sensible Heat Capacity (kW)
This data is when the indoor unit connects with 16HP outdoor unit.

RATING CAPACITY:		5.6 kW	AIR FLOW RATE: 10.4 m³/min														
EVAPORATOR AIR INTAKE. TEMP			CONDENSER AMBIENT TEMP. (°C)														
W.B.	D.B.		15	17	19	21	23	25	27	29	31	33	35	37	39	41	43
14		TC	3.7	3.7	3.7	3.7	3.7	3.7	3.7	3.7	3.7	3.7	3.7	3.7	3.7	3.7	3.7
	21	SHC	2.9	2.9	2.9	2.9	2.9	2.9	2.9	2.9	2.9	2.9	2.9	2.9	2.9	2.9	2.9
	23	SHC	3.3	3.3	3.3	3.3	3.3	3.3	3.3	3.3	3.3	3.3	3.3	3.3	3.3	3.3	3.3
	25	SHC	3.5	3.5	3.5	3.5	3.5	3.5	3.5	3.5	3.5	3.5	3.5	3.5	3.5	3.5	3.5
	27	SHC	3.5	3.5	3.5	3.5	3.5	3.5	3.5	3.5	3.5	3.5	3.5	3.5	3.5	3.5	3.5
15		TC	4.1	4.1	4.1	4.1	4.1	4.1	4.1	4.1	4.1	4.1	4.1	4.1	4.1	4.1	4.1
	21	SHC	2.8	2.8	2.8	2.8	2.8	2.8	2.8	2.8	2.8	2.8	2.8	2.8	2.8	2.8	2.8
	23	SHC	3.2	3.2	3.2	3.2	3.2	3.2	3.2	3.2	3.2	3.2	3.2	3.2	3.2	3.2	3.2
	25	SHC	3.6	3.6	3.6	3.6	3.6	3.6	3.6	3.6	3.6	3.6	3.6	3.6	3.6	3.6	3.6
	27	SHC	3.9	3.9	3.9	3.9	3.9	3.9	3.9	3.9	3.9	3.9	3.9	3.9	3.9	3.9	3.9
16		TC	4.5	4.5	4.5	4.5	4.5	4.5	4.5	4.5	4.5	4.5	4.5	4.5	4.5	4.5	4.5
	21	SHC	2.7	2.7	2.7	2.7	2.7	2.7	2.7	2.7	2.7	2.7	2.7	2.7	2.7	2.7	2.7
	23	SHC	3.1	3.1	3.1	3.1	3.1	3.1	3.1	3.1	3.1	3.1	3.1	3.1	3.1	3.1	3.1
	25	SHC	3.5	3.5	3.5	3.5	3.5	3.5	3.5	3.5	3.5	3.5	3.5	3.5	3.5	3.5	3.5
	27	SHC	3.9	3.9	3.9	3.9	3.9	3.9	3.9	3.9	3.9	3.9	3.9	3.9	3.9	3.9	3.9
	29	SHC	4.2	4.2	4.2	4.2	4.2	4.2	4.2	4.2	4.2	4.2	4.2	4.2	4.2	4.2	4.2
17		TC	4.9	4.9	4.9	4.9	4.9	4.9	4.9	4.9	4.9	4.9	4.9	4.9	4.9	4.9	4.9
	21	SHC	2.6	2.6	2.6	2.6	2.6	2.6	2.6	2.6	2.6	2.6	2.6	2.6	2.6	2.6	2.6
	23	SHC	3.0	3.0	3.0	3.0	3.0	3.0	3.0	3.0	3.0	3.0	3.0	3.0	3.0	3.0	3.0
	25	SHC	3.4	3.4	3.4	3.4	3.4	3.4	3.4	3.4	3.4	3.4	3.4	3.4	3.4	3.4	3.4
	27	SHC	3.8	3.8	3.8	3.8	3.8	3.8	3.8	3.8	3.8	3.8	3.8	3.8	3.8	3.8	3.8
	29	SHC	4.2	4.2	4.2	4.2	4.2	4.2	4.2	4.2	4.2	4.2	4.2	4.2	4.2	4.2	4.2
18		TC	5.2	5.2	5.2	5.2	5.2	5.2	5.2	5.2	5.2	5.2	5.2	5.2	5.2	5.2	5.2
	21	SHC	2.5	2.5	2.5	2.5	2.5	2.5	2.5	2.5	2.5	2.5	2.5	2.5	2.5	2.5	2.5
	23	SHC	2.9	2.9	2.9	2.9	2.9	2.9	2.9	2.9	2.9	2.9	2.9	2.9	2.9	2.9	2.9
	25	SHC	3.3	3.3	3.3	3.3	3.3	3.3	3.3	3.3	3.3	3.3	3.3	3.3	3.3	3.3	3.3
	27	SHC	3.7	3.7	3.7	3.7	3.7	3.7	3.7	3.7	3.7	3.7	3.7	3.7	3.7	3.7	3.7
	29	SHC	4.1	4.1	4.1	4.1	4.1	4.1	4.1	4.1	4.1	4.1	4.1	4.1	4.1	4.1	4.1
	31	SHC	4.4	4.4	4.4	4.4	4.4	4.4	4.4	4.4	4.4	4.4	4.4	4.4	4.4	4.4	4.4
19		TC	5.6	5.6	5.6	5.6	5.6	5.6	5.6	5.6	5.6	5.6	5.6	5.6	5.6	5.6	5.6
	21	SHC	2.4	2.4	2.4	2.4	2.4	2.4	2.4	2.4	2.4	2.4	2.4	2.4	2.4	2.4	2.4
	23	SHC	2.8	2.8	2.8	2.8	2.8	2.8	2.8	2.8	2.8	2.8	2.8	2.8	2.8	2.8	2.8
	25	SHC	3.2	3.2	3.2	3.2	3.2	3.2	3.2	3.2	3.2	3.2	3.2	3.2	3.2	3.2	3.2
	27	SHC	3.6	3.6	3.6	3.6	3.6	3.6	3.6	3.6	3.6	3.6	3.6	3.6	3.6	3.6	3.6
	29	SHC	4.0	4.0	4.0	4.0	4.0	4.0	4.0	4.0	4.0	4.0	4.0	4.0	4.0	4.0	4.0
	31	SHC	4.3	4.3	4.3	4.3	4.3	4.3	4.3	4.3	4.3	4.3	4.3	4.3	4.3	4.3	4.3
20		TC	6.0	6.0	6.0	6.0	6.0	6.0	6.0	6.0	6.0	6.0	6.0	6.0	6.0	5.9	5.9
	23	SHC	2.7	2.7	2.7	2.7	2.7	2.7	2.7	2.7	2.7	2.7	2.7	2.7	2.7	2.7	2.6
	25	SHC	3.1	3.1	3.1	3.1	3.1	3.1	3.1	3.1	3.1	3.1	3.1	3.1	3.1	3.0	3.0
	27	SHC	3.4	3.4	3.4	3.4	3.4	3.4	3.4	3.4	3.4	3.4	3.4	3.4	3.4	3.4	3.4
	29	SHC	3.8	3.8	3.8	3.8	3.8	3.8	3.8	3.8	3.8	3.8	3.8	3.8	3.8	3.8	3.8
	31	SHC	4.2	4.2	4.2	4.2	4.2	4.2	4.2	4.2	4.2	4.2	4.2	4.2	4.2	4.2	4.2
21		TC	6.3	6.3	6.3	6.3	6.3	6.3	6.3	6.3	6.3	6.3	6.3	6.3	6.3	6.1	6.0
	23	SHC	2.5	2.5	2.5	2.5	2.5	2.5	2.5	2.5	2.5	2.5	2.5	2.5	2.5	2.4	2.4
	25	SHC	2.9	2.9	2.9	2.9	2.9	2.9	2.9	2.9	2.9	2.9	2.9	2.9	2.9	2.8	2.8
	27	SHC	3.3	3.3	3.3	3.3	3.3	3.3	3.3	3.3	3.3	3.3	3.3	3.3	3.3	3.2	3.2
	29	SHC	3.7	3.7	3.7	3.7	3.7	3.7	3.7	3.7	3.7	3.7	3.7	3.7	3.7	3.6	3.5
	31	SHC	4.1	4.1	4.1	4.1	4.1	4.1	4.1	4.1	4.1	4.1	4.1	4.1	4.0	4.0	3.9
22		TC	6.7	6.7	6.7	6.7	6.7	6.7	6.7	6.7	6.7	6.7	6.7	6.6	6.4	6.2	6.1
	25	SHC	2.8	2.8	2.8	2.8	2.8	2.8	2.8	2.8	2.8	2.8	2.8	2.7	2.6	2.6	2.5
	27	SHC	3.2	3.2	3.2	3.2	3.2	3.2	3.2	3.2	3.2	3.2	3.2	3.1	3.0	3.0	2.9
	29	SHC	3.6	3.6	3.6	3.6	3.6	3.6	3.6	3.6	3.6	3.6	3.6	3.5	3.4	3.3	3.3
	31	SHC	3.9	3.9	3.9	3.9	3.9	3.9	3.9	3.9	3.9	3.9	3.9	3.9	3.8	3.7	3.7
23		TC	7.1	7.1	7.1	7.1	7.1	7.1	7.1	7.1	7.1	7.1	6.9	6.7	6.5	6.3	6.2
	25	SHC	2.6	2.6	2.6	2.6	2.6	2.6	2.6	2.6	2.6	2.6	2.6	2.5	2.4	2.3	2.3
	27	SHC	3.0	3.0	3.0	3.0	3.0	3.0	3.0	3.0	3.0	3.0	2.9	2.9	2.8	2.7	2.7
	29	SHC	3.4	3.4	3.4	3.4	3.4	3.4	3.4	3.4	3.4	3.4	3.3	3.3	3.2	3.1	3.1
	31	SHC	3.8	3.8	3.8	3.8	3.8	3.8	3.8	3.8	3.8	3.8	3.7	3.6	3.6	3.5	3.5

3. Cooling Capacity of Indoor Unit

3-4. 2-Way Cassette Type (L1 Type)

- S-22ML1E5

Power supply : 220/230/240V 1phase-50,60Hz TC : Total Cooling Capacity (kW) SHC : Sensible Heat Capacity (kW)
This data is when the indoor unit connects with 16HP outdoor unit.

RATING CAPACITY:		2.2 kW	AIR FLOW RATE: 8.0 m³/min														
EVAPORATOR			CONDENSER														
AIR INTAKE. TEMP			AMBIENT TEMP. (°C)														
W.B.	D.B.		15	17	19	21	23	25	27	29	31	33	35	37	39	41	43
14		TC	1.5	1.5	1.5	1.5	1.5	1.5	1.5	1.5	1.5	1.5	1.5	1.5	1.5	1.5	1.5
	21	SHC	1.5	1.5	1.5	1.5	1.5	1.5	1.5	1.5	1.5	1.5	1.5	1.5	1.5	1.5	1.5
	23	SHC	1.5	1.5	1.5	1.5	1.5	1.5	1.5	1.5	1.5	1.5	1.5	1.5	1.5	1.5	1.5
	25	SHC	1.5	1.5	1.5	1.5	1.5	1.5	1.5	1.5	1.5	1.5	1.5	1.5	1.5	1.5	1.5
	27	SHC	1.5	1.5	1.5	1.5	1.5	1.5	1.5	1.5	1.5	1.5	1.5	1.5	1.5	1.5	1.5
15		TC	1.6	1.6	1.6	1.6	1.6	1.6	1.6	1.6	1.6	1.6	1.6	1.6	1.6	1.6	1.6
	21	SHC	1.5	1.5	1.5	1.5	1.5	1.5	1.5	1.5	1.5	1.5	1.5	1.5	1.5	1.5	1.5
	23	SHC	1.6	1.6	1.6	1.6	1.6	1.6	1.6	1.6	1.6	1.6	1.6	1.6	1.6	1.6	1.6
	25	SHC	1.6	1.6	1.6	1.6	1.6	1.6	1.6	1.6	1.6	1.6	1.6	1.6	1.6	1.6	1.6
	27	SHC	1.6	1.6	1.6	1.6	1.6	1.6	1.6	1.6	1.6	1.6	1.6	1.6	1.6	1.6	1.6
16		TC	1.8	1.8	1.8	1.8	1.8	1.8	1.8	1.8	1.8	1.8	1.8	1.8	1.8	1.8	1.8
	21	SHC	1.4	1.4	1.4	1.4	1.4	1.4	1.4	1.4	1.4	1.4	1.4	1.4	1.4	1.4	1.4
	23	SHC	1.6	1.6	1.6	1.6	1.6	1.6	1.6	1.6	1.6	1.6	1.6	1.6	1.6	1.6	1.6
	25	SHC	1.8	1.8	1.8	1.8	1.8	1.8	1.8	1.8	1.8	1.8	1.8	1.8	1.8	1.8	1.8
	27	SHC	1.8	1.8	1.8	1.8	1.8	1.8	1.8	1.8	1.8	1.8	1.8	1.8	1.8	1.8	1.8
	29	SHC	1.8	1.8	1.8	1.8	1.8	1.8	1.8	1.8	1.8	1.8	1.8	1.8	1.8	1.8	1.8
17		TC	1.9	1.9	1.9	1.9	1.9	1.9	1.9	1.9	1.9	1.9	1.9	1.9	1.9	1.9	1.9
	21	SHC	1.3	1.3	1.3	1.3	1.3	1.3	1.3	1.3	1.3	1.3	1.3	1.3	1.3	1.3	1.3
	23	SHC	1.5	1.5	1.5	1.5	1.5	1.5	1.5	1.5	1.5	1.5	1.5	1.5	1.5	1.5	1.5
	25	SHC	1.8	1.8	1.8	1.8	1.8	1.8	1.8	1.8	1.8	1.8	1.8	1.8	1.8	1.8	1.8
	27	SHC	1.9	1.9	1.9	1.9	1.9	1.9	1.9	1.9	1.9	1.9	1.9	1.9	1.9	1.9	1.9
	29	SHC	1.9	1.9	1.9	1.9	1.9	1.9	1.9	1.9	1.9	1.9	1.9	1.9	1.9	1.9	1.9
18		TC	2.1	2.1	2.1	2.1	2.1	2.1	2.1	2.1	2.1	2.1	2.1	2.1	2.1	2.1	2.1
	21	SHC	1.2	1.2	1.2	1.2	1.2	1.2	1.2	1.2	1.2	1.2	1.2	1.2	1.2	1.2	1.2
	23	SHC	1.4	1.4	1.4	1.4	1.4	1.4	1.4	1.4	1.4	1.4	1.4	1.4	1.4	1.4	1.4
	25	SHC	1.7	1.7	1.7	1.7	1.7	1.7	1.7	1.7	1.7	1.7	1.7	1.7	1.7	1.7	1.7
	27	SHC	2.0	2.0	2.0	2.0	2.0	2.0	2.0	2.0	2.0	2.0	2.0	2.0	2.0	2.0	2.0
	29	SHC	2.1	2.1	2.1	2.1	2.1	2.1	2.1	2.1	2.1	2.1	2.1	2.1	2.1	2.1	2.1
	31	SHC	2.1	2.1	2.1	2.1	2.1	2.1	2.1	2.1	2.1	2.1	2.1	2.1	2.1	2.1	2.1
19		TC	2.2	2.2	2.2	2.2	2.2	2.2	2.2	2.2	2.2	2.2	2.2	2.2	2.2	2.2	2.2
	21	SHC	1.0	1.0	1.0	1.0	1.0	1.0	1.0	1.0	1.0	1.0	1.0	1.0	1.0	1.0	1.0
	23	SHC	1.3	1.3	1.3	1.3	1.3	1.3	1.3	1.3	1.3	1.3	1.3	1.3	1.3	1.3	1.3
	25	SHC	1.6	1.6	1.6	1.6	1.6	1.6	1.6	1.6	1.6	1.6	1.6	1.6	1.6	1.6	1.6
	27	SHC	1.9	1.9	1.9	1.9	1.9	1.9	1.9	1.9	1.9	1.9	1.9	1.9	1.9	1.9	1.9
	29	SHC	2.1	2.1	2.1	2.1	2.1	2.1	2.1	2.1	2.1	2.1	2.1	2.1	2.1	2.1	2.1
	31	SHC	2.2	2.2	2.2	2.2	2.2	2.2	2.2	2.2	2.2	2.2	2.2	2.2	2.2	2.2	2.2
20		TC	2.3	2.3	2.3	2.3	2.3	2.3	2.3	2.3	2.3	2.3	2.3	2.3	2.3	2.3	2.3
	23	SHC	1.2	1.2	1.2	1.2	1.2	1.2	1.2	1.2	1.2	1.2	1.2	1.2	1.2	1.2	1.2
	25	SHC	1.5	1.5	1.5	1.5	1.5	1.5	1.5	1.5	1.5	1.5	1.5	1.5	1.5	1.5	1.5
	27	SHC	1.7	1.7	1.7	1.7	1.7	1.7	1.7	1.7	1.7	1.7	1.7	1.7	1.7	1.7	1.7
	29	SHC	2.0	2.0	2.0	2.0	2.0	2.0	2.0	2.0	2.0	2.0	2.0	2.0	2.0	2.0	2.0
	31	SHC	2.3	2.3	2.3	2.3	2.3	2.3	2.3	2.3	2.3	2.3	2.3	2.3	2.3	2.3	2.3
21		TC	2.5	2.5	2.5	2.5	2.5	2.5	2.5	2.5	2.5	2.5	2.5	2.5	2.5	2.4	2.3
	23	SHC	1.1	1.1	1.1	1.1	1.1	1.1	1.1	1.1	1.1	1.1	1.1	1.1	1.1	1.0	1.0
	25	SHC	1.4	1.4	1.4	1.4	1.4	1.4	1.4	1.4	1.4	1.4	1.4	1.4	1.3	1.3	1.3
	27	SHC	1.6	1.6	1.6	1.6	1.6	1.6	1.6	1.6	1.6	1.6	1.6	1.6	1.6	1.6	1.6
	29	SHC	1.9	1.9	1.9	1.9	1.9	1.9	1.9	1.9	1.9	1.9	1.9	1.9	1.9	1.9	1.9
	31	SHC	2.2	2.2	2.2	2.2	2.2	2.2	2.2	2.2	2.2	2.2	2.2	2.2	2.2	2.1	2.1
22		TC	2.6	2.6	2.6	2.6	2.6	2.6	2.6	2.6	2.6	2.6	2.6	2.6	2.5	2.4	2.4
	25	SHC	1.2	1.2	1.2	1.2	1.2	1.2	1.2	1.2	1.2	1.2	1.2	1.2	1.2	1.2	1.2
	27	SHC	1.5	1.5	1.5	1.5	1.5	1.5	1.5	1.5	1.5	1.5	1.5	1.5	1.5	1.4	1.4
	29	SHC	1.8	1.8	1.8	1.8	1.8	1.8	1.8	1.8	1.8	1.8	1.8	1.8	1.7	1.7	1.7
	31	SHC	2.1	2.1	2.1	2.1	2.1	2.1	2.1	2.1	2.1	2.1	2.1	2.0	2.0	2.0	2.0
23		TC	2.8	2.8	2.8	2.8	2.8	2.8	2.8	2.8	2.8	2.8	2.7	2.6	2.6	2.5	2.4
	25	SHC	1.1	1.1	1.1	1.1	1.1	1.1	1.1	1.1	1.1	1.1	1.1	1.1	1.0	1.0	1.0
	27	SHC	1.4	1.4	1.4	1.4	1.4	1.4	1.4	1.4	1.4	1.4	1.4	1.3	1.3	1.3	1.3
	29	SHC	1.7	1.7	1.7	1.7	1.7	1.7	1.7	1.7	1.7	1.7	1.6	1.6	1.6	1.6	1.6
	31	SHC	1.9	1.9	1.9	1.9	1.9	1.9	1.9	1.9	1.9	1.9	1.9	1.9	1.9	1.8	1.8

3. Cooling Capacity of Indoor Unit

● S-28ML1E5

Power supply : 220/230/240V 1phase-50,60Hz TC : Total Cooling Capacity (kW) SHC : Sensible Heat Capacity (kW)

This data is when the indoor unit connects with 16HP outdoor unit.

RATING CAPACITY:		2.8 kW	AIR FLOW RATE: 9.0 m³/min														
EVAPORATOR			CONDENSER														
AIR INTAKE. TEMP			AMBIENT TEMP. (°C)														
W.B.	D.B.		15	17	19	21	23	25	27	29	31	33	35	37	39	41	43
14		TC	1.9	1.9	1.9	1.9	1.9	1.9	1.9	1.9	1.9	1.9	1.9	1.9	1.9	1.9	1.9
	21	SHC	1.7	1.7	1.7	1.7	1.7	1.7	1.7	1.7	1.7	1.7	1.7	1.7	1.7	1.7	1.7
	23	SHC	1.9	1.9	1.9	1.9	1.9	1.9	1.9	1.9	1.9	1.9	1.9	1.9	1.9	1.9	1.9
	25	SHC	1.9	1.9	1.9	1.9	1.9	1.9	1.9	1.9	1.9	1.9	1.9	1.9	1.9	1.9	1.9
	27	SHC	1.9	1.9	1.9	1.9	1.9	1.9	1.9	1.9	1.9	1.9	1.9	1.9	1.9	1.9	1.9
15		TC	2.1	2.1	2.1	2.1	2.1	2.1	2.1	2.1	2.1	2.1	2.1	2.1	2.1	2.1	2.1
	21	SHC	1.7	1.7	1.7	1.7	1.7	1.7	1.7	1.7	1.7	1.7	1.7	1.7	1.7	1.7	1.7
	23	SHC	1.9	1.9	1.9	1.9	1.9	1.9	1.9	1.9	1.9	1.9	1.9	1.9	1.9	1.9	1.9
	25	SHC	2.1	2.1	2.1	2.1	2.1	2.1	2.1	2.1	2.1	2.1	2.1	2.1	2.1	2.1	2.1
	27	SHC	2.1	2.1	2.1	2.1	2.1	2.1	2.1	2.1	2.1	2.1	2.1	2.1	2.1	2.1	2.1
16		TC	2.2	2.2	2.2	2.2	2.2	2.2	2.2	2.2	2.2	2.2	2.2	2.2	2.2	2.2	2.2
	21	SHC	1.6	1.6	1.6	1.6	1.6	1.6	1.6	1.6	1.6	1.6	1.6	1.6	1.6	1.6	1.6
	23	SHC	1.8	1.8	1.8	1.8	1.8	1.8	1.8	1.8	1.8	1.8	1.8	1.8	1.8	1.8	1.8
	25	SHC	2.1	2.1	2.1	2.1	2.1	2.1	2.1	2.1	2.1	2.1	2.1	2.1	2.1	2.1	2.1
	27	SHC	2.2	2.2	2.2	2.2	2.2	2.2	2.2	2.2	2.2	2.2	2.2	2.2	2.2	2.2	2.2
	29	SHC	2.2	2.2	2.2	2.2	2.2	2.2	2.2	2.2	2.2	2.2	2.2	2.2	2.2	2.2	2.2
17		TC	2.4	2.4	2.4	2.4	2.4	2.4	2.4	2.4	2.4	2.4	2.4	2.4	2.4	2.4	2.4
	21	SHC	1.5	1.5	1.5	1.5	1.5	1.5	1.5	1.5	1.5	1.5	1.5	1.5	1.5	1.5	1.5
	23	SHC	1.7	1.7	1.7	1.7	1.7	1.7	1.7	1.7	1.7	1.7	1.7	1.7	1.7	1.7	1.7
	25	SHC	2.0	2.0	2.0	2.0	2.0	2.0	2.0	2.0	2.0	2.0	2.0	2.0	2.0	2.0	2.0
	27	SHC	2.3	2.3	2.3	2.3	2.3	2.3	2.3	2.3	2.3	2.3	2.3	2.3	2.3	2.3	2.3
	29	SHC	2.4	2.4	2.4	2.4	2.4	2.4	2.4	2.4	2.4	2.4	2.4	2.4	2.4	2.4	2.4
18		TC	2.6	2.6	2.6	2.6	2.6	2.6	2.6	2.6	2.6	2.6	2.6	2.6	2.6	2.6	2.6
	21	SHC	1.4	1.4	1.4	1.4	1.4	1.4	1.4	1.4	1.4	1.4	1.4	1.4	1.4	1.4	1.4
	23	SHC	1.7	1.7	1.7	1.7	1.7	1.7	1.7	1.7	1.7	1.7	1.7	1.7	1.7	1.7	1.7
	25	SHC	1.9	1.9	1.9	1.9	1.9	1.9	1.9	1.9	1.9	1.9	1.9	1.9	1.9	1.9	1.9
	27	SHC	2.2	2.2	2.2	2.2	2.2	2.2	2.2	2.2	2.2	2.2	2.2	2.2	2.2	2.2	2.2
	29	SHC	2.5	2.5	2.5	2.5	2.5	2.5	2.5	2.5	2.5	2.5	2.5	2.5	2.5	2.5	2.5
	31	SHC	2.6	2.6	2.6	2.6	2.6	2.6	2.6	2.6	2.6	2.6	2.6	2.6	2.6	2.6	2.6
19		TC	2.8	2.8	2.8	2.8	2.8	2.8	2.8	2.8	2.8	2.8	2.8	2.8	2.8	2.8	2.8
	21	SHC	1.3	1.3	1.3	1.3	1.3	1.3	1.3	1.3	1.3	1.3	1.3	1.3	1.3	1.3	1.3
	23	SHC	1.6	1.6	1.6	1.6	1.6	1.6	1.6	1.6	1.6	1.6	1.6	1.6	1.6	1.6	1.6
	25	SHC	1.8	1.8	1.8	1.8	1.8	1.8	1.8	1.8	1.8	1.8	1.8	1.8	1.8	1.8	1.8
	27	SHC	2.1	2.1	2.1	2.1	2.1	2.1	2.1	2.1	2.1	2.1	2.1	2.1	2.1	2.1	2.1
	29	SHC	2.4	2.4	2.4	2.4	2.4	2.4	2.4	2.4	2.4	2.4	2.4	2.4	2.4	2.4	2.4
	31	SHC	2.6	2.6	2.6	2.6	2.6	2.6	2.6	2.6	2.6	2.6	2.6	2.6	2.6	2.6	2.6
20		TC	3.0	3.0	3.0	3.0	3.0	3.0	3.0	3.0	3.0	3.0	3.0	3.0	3.0	3.0	2.9
	23	SHC	1.5	1.5	1.5	1.5	1.5	1.5	1.5	1.5	1.5	1.5	1.5	1.5	1.5	1.4	1.4
	25	SHC	1.7	1.7	1.7	1.7	1.7	1.7	1.7	1.7	1.7	1.7	1.7	1.7	1.7	1.7	1.7
	27	SHC	2.0	2.0	2.0	2.0	2.0	2.0	2.0	2.0	2.0	2.0	2.0	2.0	2.0	2.0	2.0
	29	SHC	2.3	2.3	2.3	2.3	2.3	2.3	2.3	2.3	2.3	2.3	2.3	2.3	2.3	2.3	2.2
	31	SHC	2.5	2.5	2.5	2.5	2.5	2.5	2.5	2.5	2.5	2.5	2.5	2.5	2.5	2.5	2.5
21		TC	3.2	3.2	3.2	3.2	3.2	3.2	3.2	3.2	3.2	3.2	3.2	3.2	3.1	3.0	3.0
	23	SHC	1.3	1.3	1.3	1.3	1.3	1.3	1.3	1.3	1.3	1.3	1.3	1.3	1.3	1.3	1.3
	25	SHC	1.6	1.6	1.6	1.6	1.6	1.6	1.6	1.6	1.6	1.6	1.6	1.6	1.6	1.6	1.5
	27	SHC	1.9	1.9	1.9	1.9	1.9	1.9	1.9	1.9	1.9	1.9	1.9	1.9	1.9	1.8	1.8
	29	SHC	2.2	2.2	2.2	2.2	2.2	2.2	2.2	2.2	2.2	2.2	2.2	2.2	2.1	2.1	2.1
	31	SHC	2.4	2.4	2.4	2.4	2.4	2.4	2.4	2.4	2.4	2.4	2.4	2.4	2.4	2.4	2.4
22		TC	3.4	3.4	3.4	3.4	3.4	3.4	3.4	3.4	3.4	3.4	3.4	3.3	3.2	3.1	3.1
	25	SHC	1.5	1.5	1.5	1.5	1.5	1.5	1.5	1.5	1.5	1.5	1.5	1.5	1.4	1.4	1.4
	27	SHC	1.8	1.8	1.8	1.8	1.8	1.8	1.8	1.8	1.8	1.8	1.8	1.8	1.7	1.7	1.7
	29	SHC	2.0	2.0	2.0	2.0	2.0	2.0	2.0	2.0	2.0	2.0	2.0	2.0	2.0	2.0	1.9
	31	SHC	2.3	2.3	2.3	2.3	2.3	2.3	2.3	2.3	2.3	2.3	2.3	2.3	2.3	2.2	2.2
23		TC	3.5	3.5	3.5	3.5	3.5	3.5	3.5	3.5	3.5	3.5	3.4	3.3	3.3	3.2	3.1
	25	SHC	1.4	1.4	1.4	1.4	1.4	1.4	1.4	1.4	1.4	1.4	1.4	1.3	1.3	1.3	1.2
	27	SHC	1.7	1.7	1.7	1.7	1.7	1.7	1.7	1.7	1.7	1.7	1.6	1.6	1.6	1.5	1.5
	29	SHC	1.9	1.9	1.9	1.9	1.9	1.9	1.9	1.9	1.9	1.9	1.9	1.9	1.8	1.8	1.8
	31	SHC	2.2	2.2	2.2	2.2	2.2	2.2	2.2	2.2	2.2	2.2	2.2	2.1	2.1	2.1	2.0

3. Cooling Capacity of Indoor Unit

● S-36ML1E5

Power supply : 220/230/240V 1phase-50,60Hz TC : Total Cooling Capacity (kW) SHC : Sensible Heat Capacity (kW)

This data is when the indoor unit connects with 16HP outdoor unit.

RATING CAPACITY:		3.6 kW	AIR FLOW RATE: 9.7 m³/min														
EVAPORATOR			CONDENSER														
AIR INTAKE. TEMP			AMBIENT TEMP. (°C)														
W.B.	D.B.		15	17	19	21	23	25	27	29	31	33	35	37	39	41	43
14		TC	2.4	2.4	2.4	2.4	2.4	2.4	2.4	2.4	2.4	2.4	2.4	2.4	2.4	2.4	2.4
	21	SHC	2.0	2.0	2.0	2.0	2.0	2.0	2.0	2.0	2.0	2.0	2.0	2.0	2.0	2.0	2.0
	23	SHC	2.3	2.3	2.3	2.3	2.3	2.3	2.3	2.3	2.3	2.3	2.3	2.3	2.3	2.3	2.3
	25	SHC	2.4	2.4	2.4	2.4	2.4	2.4	2.4	2.4	2.4	2.4	2.4	2.4	2.4	2.4	2.4
	27	SHC	2.4	2.4	2.4	2.4	2.4	2.4	2.4	2.4	2.4	2.4	2.4	2.4	2.4	2.4	2.4
15		TC	2.6	2.6	2.6	2.6	2.6	2.6	2.6	2.6	2.6	2.6	2.6	2.6	2.6	2.6	2.6
	21	SHC	1.9	1.9	1.9	1.9	1.9	1.9	1.9	1.9	1.9	1.9	1.9	1.9	1.9	1.9	1.9
	23	SHC	2.2	2.2	2.2	2.2	2.2	2.2	2.2	2.2	2.2	2.2	2.2	2.2	2.2	2.2	2.2
	25	SHC	2.5	2.5	2.5	2.5	2.5	2.5	2.5	2.5	2.5	2.5	2.5	2.5	2.5	2.5	2.5
	27	SHC	2.6	2.6	2.6	2.6	2.6	2.6	2.6	2.6	2.6	2.6	2.6	2.6	2.6	2.6	2.6
16		TC	2.9	2.9	2.9	2.9	2.9	2.9	2.9	2.9	2.9	2.9	2.9	2.9	2.9	2.9	2.9
	21	SHC	1.9	1.9	1.9	1.9	1.9	1.9	1.9	1.9	1.9	1.9	1.9	1.9	1.9	1.9	1.9
	23	SHC	2.2	2.2	2.2	2.2	2.2	2.2	2.2	2.2	2.2	2.2	2.2	2.2	2.2	2.2	2.2
	25	SHC	2.4	2.4	2.4	2.4	2.4	2.4	2.4	2.4	2.4	2.4	2.4	2.4	2.4	2.4	2.4
	27	SHC	2.7	2.7	2.7	2.7	2.7	2.7	2.7	2.7	2.7	2.7	2.7	2.7	2.7	2.7	2.7
	29	SHC	2.9	2.9	2.9	2.9	2.9	2.9	2.9	2.9	2.9	2.9	2.9	2.9	2.9	2.9	2.9
17		TC	3.1	3.1	3.1	3.1	3.1	3.1	3.1	3.1	3.1	3.1	3.1	3.1	3.1	3.1	3.1
	21	SHC	1.8	1.8	1.8	1.8	1.8	1.8	1.8	1.8	1.8	1.8	1.8	1.8	1.8	1.8	1.8
	23	SHC	2.1	2.1	2.1	2.1	2.1	2.1	2.1	2.1	2.1	2.1	2.1	2.1	2.1	2.1	2.1
	25	SHC	2.4	2.4	2.4	2.4	2.4	2.4	2.4	2.4	2.4	2.4	2.4	2.4	2.4	2.4	2.4
	27	SHC	2.6	2.6	2.6	2.6	2.6	2.6	2.6	2.6	2.6	2.6	2.6	2.6	2.6	2.6	2.6
	29	SHC	2.9	2.9	2.9	2.9	2.9	2.9	2.9	2.9	2.9	2.9	2.9	2.9	2.9	2.9	2.9
18		TC	3.4	3.4	3.4	3.4	3.4	3.4	3.4	3.4	3.4	3.4	3.4	3.4	3.4	3.4	3.4
	21	SHC	1.7	1.7	1.7	1.7	1.7	1.7	1.7	1.7	1.7	1.7	1.7	1.7	1.7	1.7	1.7
	23	SHC	2.0	2.0	2.0	2.0	2.0	2.0	2.0	2.0	2.0	2.0	2.0	2.0	2.0	2.0	2.0
	25	SHC	2.3	2.3	2.3	2.3	2.3	2.3	2.3	2.3	2.3	2.3	2.3	2.3	2.3	2.3	2.3
	27	SHC	2.6	2.6	2.6	2.6	2.6	2.6	2.6	2.6	2.6	2.6	2.6	2.6	2.6	2.6	2.6
	29	SHC	2.8	2.8	2.8	2.8	2.8	2.8	2.8	2.8	2.8	2.8	2.8	2.8	2.8	2.8	2.8
	31	SHC	3.1	3.1	3.1	3.1	3.1	3.1	3.1	3.1	3.1	3.1	3.1	3.1	3.1	3.1	3.1
19		TC	3.6	3.6	3.6	3.6	3.6	3.6	3.6	3.6	3.6	3.6	3.6	3.6	3.6	3.6	3.6
	21	SHC	1.6	1.6	1.6	1.6	1.6	1.6	1.6	1.6	1.6	1.6	1.6	1.6	1.6	1.6	1.6
	23	SHC	1.9	1.9	1.9	1.9	1.9	1.9	1.9	1.9	1.9	1.9	1.9	1.9	1.9	1.9	1.9
	25	SHC	2.2	2.2	2.2	2.2	2.2	2.2	2.2	2.2	2.2	2.2	2.2	2.2	2.2	2.2	2.2
	27	SHC	2.5	2.5	2.5	2.5	2.5	2.5	2.5	2.5	2.5	2.5	2.5	2.5	2.5	2.5	2.5
	29	SHC	2.8	2.8	2.8	2.8	2.8	2.8	2.8	2.8	2.8	2.8	2.8	2.8	2.8	2.8	2.8
	31	SHC	3.0	3.0	3.0	3.0	3.0	3.0	3.0	3.0	3.0	3.0	3.0	3.0	3.0	3.0	3.0
20		TC	3.8	3.8	3.8	3.8	3.8	3.8	3.8	3.8	3.8	3.8	3.8	3.8	3.8	3.8	3.8
	23	SHC	1.8	1.8	1.8	1.8	1.8	1.8	1.8	1.8	1.8	1.8	1.8	1.8	1.8	1.8	1.8
	25	SHC	2.1	2.1	2.1	2.1	2.1	2.1	2.1	2.1	2.1	2.1	2.1	2.1	2.1	2.1	2.1
	27	SHC	2.4	2.4	2.4	2.4	2.4	2.4	2.4	2.4	2.4	2.4	2.4	2.4	2.4	2.4	2.3
	29	SHC	2.7	2.7	2.7	2.7	2.7	2.7	2.7	2.7	2.7	2.7	2.7	2.7	2.7	2.6	2.6
	31	SHC	2.9	2.9	2.9	2.9	2.9	2.9	2.9	2.9	2.9	2.9	2.9	2.9	2.9	2.9	2.9
21		TC	4.1	4.1	4.1	4.1	4.1	4.1	4.1	4.1	4.1	4.1	4.1	4.1	4.0	3.9	3.8
	23	SHC	1.7	1.7	1.7	1.7	1.7	1.7	1.7	1.7	1.7	1.7	1.7	1.7	1.7	1.6	1.6
	25	SHC	2.0	2.0	2.0	2.0	2.0	2.0	2.0	2.0	2.0	2.0	2.0	2.0	2.0	1.9	1.9
	27	SHC	2.3	2.3	2.3	2.3	2.3	2.3	2.3	2.3	2.3	2.3	2.3	2.3	2.3	2.2	2.2
	29	SHC	2.6	2.6	2.6	2.6	2.6	2.6	2.6	2.6	2.6	2.6	2.6	2.6	2.5	2.5	2.5
	31	SHC	2.8	2.8	2.8	2.8	2.8	2.8	2.8	2.8	2.8	2.8	2.8	2.8	2.8	2.8	2.7
22		TC	4.3	4.3	4.3	4.3	4.3	4.3	4.3	4.3	4.3	4.3	4.3	4.2	4.1	4.0	3.9
	25	SHC	1.9	1.9	1.9	1.9	1.9	1.9	1.9	1.9	1.9	1.9	1.9	1.9	1.8	1.8	1.7
	27	SHC	2.2	2.2	2.2	2.2	2.2	2.2	2.2	2.2	2.2	2.2	2.2	2.1	2.1	2.0	2.0
	29	SHC	2.5	2.5	2.5	2.5	2.5	2.5	2.5	2.5	2.5	2.5	2.5	2.4	2.4	2.3	2.3
	31	SHC	2.7	2.7	2.7	2.7	2.7	2.7	2.7	2.7	2.7	2.7	2.7	2.7	2.6	2.6	2.6
23		TC	4.6	4.6	4.6	4.6	4.6	4.6	4.6	4.6	4.6	4.6	4.4	4.3	4.2	4.1	4.0
	25	SHC	1.8	1.8	1.8	1.8	1.8	1.8	1.8	1.8	1.8	1.8	1.7	1.7	1.6	1.6	1.6
	27	SHC	2.1	2.1	2.1	2.1	2.1	2.1	2.1	2.1	2.1	2.1	2.0	2.0	1.9	1.9	1.8
	29	SHC	2.3	2.3	2.3	2.3	2.3	2.3	2.3	2.3	2.3	2.3	2.3	2.2	2.2	2.1	2.1
	31	SHC	2.6	2.6	2.6	2.6	2.6	2.6	2.6	2.6	2.6	2.6	2.6	2.5	2.5	2.4	2.4

3. Cooling Capacity of Indoor Unit

● S-45ML1E5

Power supply : 220/230/240V 1phase-50,60Hz TC : Total Cooling Capacity (kW) SHC : Sensible Heat Capacity (kW)

This data is when the indoor unit connects with 16HP outdoor unit.

RATING CAPACITY:		4.5 kW	AIR FLOW RATE:11.0 m³/min														
EVAPORATOR			CONDENSER														
AIR INTAKE. TEMP			AMBIENT TEMP. (°C)														
W.B.	D.B.		15	17	19	21	23	25	27	29	31	33	35	37	39	41	43
14		TC	3.0	3.0	3.0	3.0	3.0	3.0	3.0	3.0	3.0	3.0	3.0	3.0	3.0	3.0	3.0
	21	SHC	2.2	2.2	2.2	2.2	2.2	2.2	2.2	2.2	2.2	2.2	2.2	2.2	2.2	2.2	2.2
	23	SHC	2.4	2.4	2.4	2.4	2.4	2.4	2.4	2.4	2.4	2.4	2.4	2.4	2.4	2.4	2.4
	25	SHC	2.7	2.7	2.7	2.7	2.7	2.7	2.7	2.7	2.7	2.7	2.7	2.7	2.7	2.7	2.7
	27	SHC	2.9	2.9	2.9	2.9	2.9	2.9	2.9	2.9	2.9	2.9	2.9	2.9	2.9	2.9	2.9
15		TC	3.3	3.3	3.3	3.3	3.3	3.3	3.3	3.3	3.3	3.3	3.3	3.3	3.3	3.3	3.3
	21	SHC	2.2	2.2	2.2	2.2	2.2	2.2	2.2	2.2	2.2	2.2	2.2	2.2	2.2	2.2	2.2
	23	SHC	2.4	2.4	2.4	2.4	2.4	2.4	2.4	2.4	2.4	2.4	2.4	2.4	2.4	2.4	2.4
	25	SHC	2.7	2.7	2.7	2.7	2.7	2.7	2.7	2.7	2.7	2.7	2.7	2.7	2.7	2.7	2.7
	27	SHC	2.9	2.9	2.9	2.9	2.9	2.9	2.9	2.9	2.9	2.9	2.9	2.9	2.9	2.9	2.9
16		TC	3.6	3.6	3.6	3.6	3.6	3.6	3.6	3.6	3.6	3.6	3.6	3.6	3.6	3.6	3.6
	21	SHC	2.2	2.2	2.2	2.2	2.2	2.2	2.2	2.2	2.2	2.2	2.2	2.2	2.2	2.2	2.2
	23	SHC	2.4	2.4	2.4	2.4	2.4	2.4	2.4	2.4	2.4	2.4	2.4	2.4	2.4	2.4	2.4
	25	SHC	2.6	2.6	2.6	2.6	2.6	2.6	2.6	2.6	2.6	2.6	2.6	2.6	2.6	2.6	2.6
	27	SHC	2.9	2.9	2.9	2.9	2.9	2.9	2.9	2.9	2.9	2.9	2.9	2.9	2.9	2.9	2.9
	29	SHC	3.1	3.1	3.1	3.1	3.1	3.1	3.1	3.1	3.1	3.1	3.1	3.1	3.1	3.1	3.1
17		TC	3.9	3.9	3.9	3.9	3.9	3.9	3.9	3.9	3.9	3.9	3.9	3.9	3.9	3.9	3.9
	21	SHC	2.2	2.2	2.2	2.2	2.2	2.2	2.2	2.2	2.2	2.2	2.2	2.2	2.2	2.2	2.2
	23	SHC	2.4	2.4	2.4	2.4	2.4	2.4	2.4	2.4	2.4	2.4	2.4	2.4	2.4	2.4	2.4
	25	SHC	2.6	2.6	2.6	2.6	2.6	2.6	2.6	2.6	2.6	2.6	2.6	2.6	2.6	2.6	2.6
	27	SHC	2.9	2.9	2.9	2.9	2.9	2.9	2.9	2.9	2.9	2.9	2.9	2.9	2.9	2.9	2.9
	29	SHC	3.1	3.1	3.1	3.1	3.1	3.1	3.1	3.1	3.1	3.1	3.1	3.1	3.1	3.1	3.1
18		TC	4.2	4.2	4.2	4.2	4.2	4.2	4.2	4.2	4.2	4.2	4.2	4.2	4.2	4.2	4.2
	21	SHC	2.1	2.1	2.1	2.1	2.1	2.1	2.1	2.1	2.1	2.1	2.1	2.1	2.1	2.1	2.1
	23	SHC	2.4	2.4	2.4	2.4	2.4	2.4	2.4	2.4	2.4	2.4	2.4	2.4	2.4	2.4	2.4
	25	SHC	2.6	2.6	2.6	2.6	2.6	2.6	2.6	2.6	2.6	2.6	2.6	2.6	2.6	2.6	2.6
	27	SHC	2.8	2.8	2.8	2.8	2.8	2.8	2.8	2.8	2.8	2.8	2.8	2.8	2.8	2.8	2.8
	29	SHC	3.1	3.1	3.1	3.1	3.1	3.1	3.1	3.1	3.1	3.1	3.1	3.1	3.1	3.1	3.1
	31	SHC	3.3	3.3	3.3	3.3	3.3	3.3	3.3	3.3	3.3	3.3	3.3	3.3	3.3	3.3	3.3
19		TC	4.5	4.5	4.5	4.5	4.5	4.5	4.5	4.5	4.5	4.5	4.5	4.5	4.5	4.5	4.5
	21	SHC	2.1	2.1	2.1	2.1	2.1	2.1	2.1	2.1	2.1	2.1	2.1	2.1	2.1	2.1	2.1
	23	SHC	2.3	2.3	2.3	2.3	2.3	2.3	2.3	2.3	2.3	2.3	2.3	2.3	2.3	2.3	2.3
	25	SHC	2.6	2.6	2.6	2.6	2.6	2.6	2.6	2.6	2.6	2.6	2.6	2.6	2.6	2.6	2.6
	27	SHC	2.8	2.8	2.8	2.8	2.8	2.8	2.8	2.8	2.8	2.8	2.8	2.8	2.8	2.8	2.8
	29	SHC	3.0	3.0	3.0	3.0	3.0	3.0	3.0	3.0	3.0	3.0	3.0	3.0	3.0	3.0	3.0
	31	SHC	3.3	3.3	3.3	3.3	3.3	3.3	3.3	3.3	3.3	3.3	3.3	3.3	3.3	3.3	3.3
20		TC	4.8	4.8	4.8	4.8	4.8	4.8	4.8	4.8	4.8	4.8	4.8	4.8	4.8	4.8	4.7
	23	SHC	2.3	2.3	2.3	2.3	2.3	2.3	2.3	2.3	2.3	2.3	2.3	2.3	2.3	2.3	2.2
	25	SHC	2.5	2.5	2.5	2.5	2.5	2.5	2.5	2.5	2.5	2.5	2.5	2.5	2.5	2.5	2.5
	27	SHC	2.8	2.8	2.8	2.8	2.8	2.8	2.8	2.8	2.8	2.8	2.8	2.8	2.8	2.7	2.7
	29	SHC	3.0	3.0	3.0	3.0	3.0	3.0	3.0	3.0	3.0	3.0	3.0	3.0	3.0	3.0	2.9
	31	SHC	3.2	3.2	3.2	3.2	3.2	3.2	3.2	3.2	3.2	3.2	3.2	3.2	3.2	3.2	3.2
21		TC	5.1	5.1	5.1	5.1	5.1	5.1	5.1	5.1	5.1	5.1	5.1	5.1	5.0	4.9	4.8
	23	SHC	2.2	2.2	2.2	2.2	2.2	2.2	2.2	2.2	2.2	2.2	2.2	2.2	2.2	2.1	2.1
	25	SHC	2.5	2.5	2.5	2.5	2.5	2.5	2.5	2.5	2.5	2.5	2.5	2.5	2.4	2.4	2.3
	27	SHC	2.7	2.7	2.7	2.7	2.7	2.7	2.7	2.7	2.7	2.7	2.7	2.7	2.7	2.6	2.6
	29	SHC	2.9	2.9	2.9	2.9	2.9	2.9	2.9	2.9	2.9	2.9	2.9	2.9	2.9	2.8	2.8
	31	SHC	3.2	3.2	3.2	3.2	3.2	3.2	3.2	3.2	3.2	3.2	3.2	3.2	3.1	3.1	3.0
22		TC	5.4	5.4	5.4	5.4	5.4	5.4	5.4	5.4	5.4	5.4	5.4	5.3	5.1	5.0	4.9
	25	SHC	2.4	2.4	2.4	2.4	2.4	2.4	2.4	2.4	2.4	2.4	2.4	2.4	2.3	2.2	2.2
	27	SHC	2.6	2.6	2.6	2.6	2.6	2.6	2.6	2.6	2.6	2.6	2.6	2.6	2.5	2.4	2.4
	29	SHC	2.9	2.9	2.9	2.9	2.9	2.9	2.9	2.9	2.9	2.9	2.9	2.8	2.7	2.7	2.6
	31	SHC	3.1	3.1	3.1	3.1	3.1	3.1	3.1	3.1	3.1	3.1	3.1	3.1	3.0	2.9	2.9
23		TC	5.7	5.7	5.7	5.7	5.7	5.7	5.7	5.7	5.7	5.7	5.5	5.4	5.2	5.1	5.0
	25	SHC	2.4	2.4	2.4	2.4	2.4	2.4	2.4	2.4	2.4	2.4	2.3	2.2	2.1	2.0	2.0
	27	SHC	2.6	2.6	2.6	2.6	2.6	2.6	2.6	2.6	2.6	2.6	2.5	2.4	2.4	2.3	2.2
	29	SHC	2.8	2.8	2.8	2.8	2.8	2.8	2.8	2.8	2.8	2.8	2.7	2.7	2.6	2.5	2.5
	31	SHC	3.1	3.1	3.1	3.1	3.1	3.1	3.1	3.1	3.1	3.1	3.0	2.9	2.8	2.7	2.7

3. Cooling Capacity of Indoor Unit

● S-56ML1E5

Power supply : 220/230/240V 1phase-50,60Hz TC : Total Cooling Capacity (kW) SHC : Sensible Heat Capacity (kW)

This data is when the indoor unit connects with 16HP outdoor unit.

RATING CAPACITY:		5.6 kW	AIR FLOW RATE: 11.0 m³/min														
EVAPORATOR			CONDENSER														
AIR INTAKE. TEMP			AMBIENT TEMP. (°C)														
W.B.	D.B.		15	17	19	21	23	25	27	29	31	33	35	37	39	41	43
14		TC	3.7	3.7	3.7	3.7	3.7	3.7	3.7	3.7	3.7	3.7	3.7	3.7	3.7	3.7	3.7
	21	SHC	3.2	3.2	3.2	3.2	3.2	3.2	3.2	3.2	3.2	3.2	3.2	3.2	3.2	3.2	3.2
	23	SHC	3.6	3.6	3.6	3.6	3.6	3.6	3.6	3.6	3.6	3.6	3.6	3.6	3.6	3.6	3.6
	25	SHC	3.7	3.7	3.7	3.7	3.7	3.7	3.7	3.7	3.7	3.7	3.7	3.7	3.7	3.7	3.7
	27	SHC	3.7	3.7	3.7	3.7	3.7	3.7	3.7	3.7	3.7	3.7	3.7	3.7	3.7	3.7	3.7
15		TC	4.1	4.1	4.1	4.1	4.1	4.1	4.1	4.1	4.1	4.1	4.1	4.1	4.1	4.1	4.1
	21	SHC	3.1	3.1	3.1	3.1	3.1	3.1	3.1	3.1	3.1	3.1	3.1	3.1	3.1	3.1	3.1
	23	SHC	3.5	3.5	3.5	3.5	3.5	3.5	3.5	3.5	3.5	3.5	3.5	3.5	3.5	3.5	3.5
	25	SHC	4.0	4.0	4.0	4.0	4.0	4.0	4.0	4.0	4.0	4.0	4.0	4.0	4.0	4.0	4.0
	27	SHC	4.1	4.1	4.1	4.1	4.1	4.1	4.1	4.1	4.1	4.1	4.1	4.1	4.1	4.1	4.1
16		TC	4.5	4.5	4.5	4.5	4.5	4.5	4.5	4.5	4.5	4.5	4.5	4.5	4.5	4.5	4.5
	21	SHC	3.0	3.0	3.0	3.0	3.0	3.0	3.0	3.0	3.0	3.0	3.0	3.0	3.0	3.0	3.0
	23	SHC	3.4	3.4	3.4	3.4	3.4	3.4	3.4	3.4	3.4	3.4	3.4	3.4	3.4	3.4	3.4
	25	SHC	3.9	3.9	3.9	3.9	3.9	3.9	3.9	3.9	3.9	3.9	3.9	3.9	3.9	3.9	3.9
	27	SHC	4.3	4.3	4.3	4.3	4.3	4.3	4.3	4.3	4.3	4.3	4.3	4.3	4.3	4.3	4.3
	29	SHC	4.5	4.5	4.5	4.5	4.5	4.5	4.5	4.5	4.5	4.5	4.5	4.5	4.5	4.5	4.5
17		TC	4.9	4.9	4.9	4.9	4.9	4.9	4.9	4.9	4.9	4.9	4.9	4.9	4.9	4.9	4.9
	21	SHC	2.8	2.8	2.8	2.8	2.8	2.8	2.8	2.8	2.8	2.8	2.8	2.8	2.8	2.8	2.8
	23	SHC	3.3	3.3	3.3	3.3	3.3	3.3	3.3	3.3	3.3	3.3	3.3	3.3	3.3	3.3	3.3
	25	SHC	3.7	3.7	3.7	3.7	3.7	3.7	3.7	3.7	3.7	3.7	3.7	3.7	3.7	3.7	3.7
	27	SHC	4.2	4.2	4.2	4.2	4.2	4.2	4.2	4.2	4.2	4.2	4.2	4.2	4.2	4.2	4.2
	29	SHC	4.6	4.6	4.6	4.6	4.6	4.6	4.6	4.6	4.6	4.6	4.6	4.6	4.6	4.6	4.6
18		TC	5.2	5.2	5.2	5.2	5.2	5.2	5.2	5.2	5.2	5.2	5.2	5.2	5.2	5.2	5.2
	21	SHC	2.7	2.7	2.7	2.7	2.7	2.7	2.7	2.7	2.7	2.7	2.7	2.7	2.7	2.7	2.7
	23	SHC	3.1	3.1	3.1	3.1	3.1	3.1	3.1	3.1	3.1	3.1	3.1	3.1	3.1	3.1	3.1
	25	SHC	3.6	3.6	3.6	3.6	3.6	3.6	3.6	3.6	3.6	3.6	3.6	3.6	3.6	3.6	3.6
	27	SHC	4.0	4.0	4.0	4.0	4.0	4.0	4.0	4.0	4.0	4.0	4.0	4.0	4.0	4.0	4.0
	29	SHC	4.5	4.5	4.5	4.5	4.5	4.5	4.5	4.5	4.5	4.5	4.5	4.5	4.5	4.5	4.5
	31	SHC	4.9	4.9	4.9	4.9	4.9	4.9	4.9	4.9	4.9	4.9	4.9	4.9	4.9	4.9	4.9
19		TC	5.6	5.6	5.6	5.6	5.6	5.6	5.6	5.6	5.6	5.6	5.6	5.6	5.6	5.6	5.6
	21	SHC	2.5	2.5	2.5	2.5	2.5	2.5	2.5	2.5	2.5	2.5	2.5	2.5	2.5	2.5	2.5
	23	SHC	3.0	3.0	3.0	3.0	3.0	3.0	3.0	3.0	3.0	3.0	3.0	3.0	3.0	3.0	3.0
	25	SHC	3.4	3.4	3.4	3.4	3.4	3.4	3.4	3.4	3.4	3.4	3.4	3.4	3.4	3.4	3.4
	27	SHC	3.9	3.9	3.9	3.9	3.9	3.9	3.9	3.9	3.9	3.9	3.9	3.9	3.9	3.9	3.9
	29	SHC	4.4	4.4	4.4	4.4	4.4	4.4	4.4	4.4	4.4	4.4	4.4	4.4	4.4	4.4	4.4
	31	SHC	4.8	4.8	4.8	4.8	4.8	4.8	4.8	4.8	4.8	4.8	4.8	4.8	4.8	4.8	4.8
20		TC	6.0	6.0	6.0	6.0	6.0	6.0	6.0	6.0	6.0	6.0	6.0	6.0	6.0	5.9	5.9
	23	SHC	2.8	2.8	2.8	2.8	2.8	2.8	2.8	2.8	2.8	2.8	2.8	2.8	2.8	2.8	2.8
	25	SHC	3.3	3.3	3.3	3.3	3.3	3.3	3.3	3.3	3.3	3.3	3.3	3.3	3.3	3.3	3.2
	27	SHC	3.7	3.7	3.7	3.7	3.7	3.7	3.7	3.7	3.7	3.7	3.7	3.7	3.7	3.7	3.7
	29	SHC	4.2	4.2	4.2	4.2	4.2	4.2	4.2	4.2	4.2	4.2	4.2	4.2	4.2	4.2	4.1
	31	SHC	4.6	4.6	4.6	4.6	4.6	4.6	4.6	4.6	4.6	4.6	4.6	4.6	4.6	4.6	4.6
21		TC	6.3	6.3	6.3	6.3	6.3	6.3	6.3	6.3	6.3	6.3	6.3	6.3	6.3	6.1	6.0
	23	SHC	2.7	2.7	2.7	2.7	2.7	2.7	2.7	2.7	2.7	2.7	2.7	2.7	2.6	2.6	2.5
	25	SHC	3.1	3.1	3.1	3.1	3.1	3.1	3.1	3.1	3.1	3.1	3.1	3.1	3.1	3.0	3.0
	27	SHC	3.6	3.6	3.6	3.6	3.6	3.6	3.6	3.6	3.6	3.6	3.6	3.6	3.5	3.5	3.4
	29	SHC	4.0	4.0	4.0	4.0	4.0	4.0	4.0	4.0	4.0	4.0	4.0	4.0	4.0	3.9	3.9
	31	SHC	4.5	4.5	4.5	4.5	4.5	4.5	4.5	4.5	4.5	4.5	4.5	4.5	4.4	4.4	4.3
22		TC	6.7	6.7	6.7	6.7	6.7	6.7	6.7	6.7	6.7	6.7	6.7	6.6	6.4	6.2	6.1
	25	SHC	2.9	2.9	2.9	2.9	2.9	2.9	2.9	2.9	2.9	2.9	2.9	2.9	2.8	2.7	2.7
	27	SHC	3.4	3.4	3.4	3.4	3.4	3.4	3.4	3.4	3.4	3.4	3.4	3.3	3.3	3.2	3.2
	29	SHC	3.9	3.9	3.9	3.9	3.9	3.9	3.9	3.9	3.9	3.9	3.9	3.8	3.7	3.6	3.6
	31	SHC	4.3	4.3	4.3	4.3	4.3	4.3	4.3	4.3	4.3	4.3	4.3	4.2	4.2	4.1	4.1
23		TC	7.1	7.1	7.1	7.1	7.1	7.1	7.1	7.1	7.1	7.1	6.9	6.7	6.5	6.3	6.2
	25	SHC	2.8	2.8	2.8	2.8	2.8	2.8	2.8	2.8	2.8	2.8	2.7	2.6	2.5	2.5	2.4
	27	SHC	3.2	3.2	3.2	3.2	3.2	3.2	3.2	3.2	3.2	3.2	3.1	3.1	3.0	2.9	2.9
	29	SHC	3.7	3.7	3.7	3.7	3.7	3.7	3.7	3.7	3.7	3.7	3.6	3.5	3.5	3.4	3.3
	31	SHC	4.1	4.1	4.1	4.1	4.1	4.1	4.1	4.1	4.1	4.1	4.0	4.0	3.9	3.8	3.8

3. Cooling Capacity of Indoor Unit

● S-73ML1E5

Power supply : 220/230/240V 1phase-50,60Hz TC : Total Cooling Capacity (kW) SHC : Sensible Heat Capacity (kW)

This data is when the indoor unit connects with 16HP outdoor unit.

RATING CAPACITY:		7.3 kW	AIR FLOW RATE: 19.0 m³/min														
EVAPORATOR			CONDENSER														
AIR INTAKE. TEMP			AMBIENT TEMP. (°C)														
W.B.	D.B.		15	17	19	21	23	25	27	29	31	33	35	37	39	41	43
14		TC	4.9	4.9	4.9	4.9	4.9	4.9	4.9	4.9	4.9	4.9	4.9	4.9	4.9	4.9	4.9
	21	SHC	3.9	3.9	3.9	3.9	3.9	3.9	3.9	3.9	3.9	3.9	3.9	3.9	3.9	3.9	3.9
	23	SHC	4.4	4.4	4.4	4.4	4.4	4.4	4.4	4.4	4.4	4.4	4.4	4.4	4.4	4.4	4.4
	25	SHC	4.9	4.9	4.9	4.9	4.9	4.9	4.9	4.9	4.9	4.9	4.9	4.9	4.9	4.9	4.9
	27	SHC	4.9	4.9	4.9	4.9	4.9	4.9	4.9	4.9	4.9	4.9	4.9	4.9	4.9	4.9	4.9
15		TC	5.4	5.4	5.4	5.4	5.4	5.4	5.4	5.4	5.4	5.4	5.4	5.4	5.4	5.4	5.4
	21	SHC	3.8	3.8	3.8	3.8	3.8	3.8	3.8	3.8	3.8	3.8	3.8	3.8	3.8	3.8	3.8
	23	SHC	4.3	4.3	4.3	4.3	4.3	4.3	4.3	4.3	4.3	4.3	4.3	4.3	4.3	4.3	4.3
	25	SHC	4.8	4.8	4.8	4.8	4.8	4.8	4.8	4.8	4.8	4.8	4.8	4.8	4.8	4.8	4.8
	27	SHC	5.3	5.3	5.3	5.3	5.3	5.3	5.3	5.3	5.3	5.3	5.3	5.3	5.3	5.3	5.3
16		TC	5.8	5.8	5.8	5.8	5.8	5.8	5.8	5.8	5.8	5.8	5.8	5.8	5.8	5.8	5.8
	21	SHC	3.7	3.7	3.7	3.7	3.7	3.7	3.7	3.7	3.7	3.7	3.7	3.7	3.7	3.7	3.7
	23	SHC	4.2	4.2	4.2	4.2	4.2	4.2	4.2	4.2	4.2	4.2	4.2	4.2	4.2	4.2	4.2
	25	SHC	4.7	4.7	4.7	4.7	4.7	4.7	4.7	4.7	4.7	4.7	4.7	4.7	4.7	4.7	4.7
	27	SHC	5.2	5.2	5.2	5.2	5.2	5.2	5.2	5.2	5.2	5.2	5.2	5.2	5.2	5.2	5.2
	29	SHC	5.7	5.7	5.7	5.7	5.7	5.7	5.7	5.7	5.7	5.7	5.7	5.7	5.7	5.7	5.7
17		TC	6.3	6.3	6.3	6.3	6.3	6.3	6.3	6.3	6.3	6.3	6.3	6.3	6.3	6.3	6.3
	21	SHC	3.6	3.6	3.6	3.6	3.6	3.6	3.6	3.6	3.6	3.6	3.6	3.6	3.6	3.6	3.6
	23	SHC	4.1	4.1	4.1	4.1	4.1	4.1	4.1	4.1	4.1	4.1	4.1	4.1	4.1	4.1	4.1
	25	SHC	4.6	4.6	4.6	4.6	4.6	4.6	4.6	4.6	4.6	4.6	4.6	4.6	4.6	4.6	4.6
	27	SHC	5.1	5.1	5.1	5.1	5.1	5.1	5.1	5.1	5.1	5.1	5.1	5.1	5.1	5.1	5.1
	29	SHC	5.6	5.6	5.6	5.6	5.6	5.6	5.6	5.6	5.6	5.6	5.6	5.6	5.6	5.6	5.6
18		TC	6.8	6.8	6.8	6.8	6.8	6.8	6.8	6.8	6.8	6.8	6.8	6.8	6.8	6.8	6.8
	21	SHC	3.5	3.5	3.5	3.5	3.5	3.5	3.5	3.5	3.5	3.5	3.5	3.5	3.5	3.5	3.5
	23	SHC	4.0	4.0	4.0	4.0	4.0	4.0	4.0	4.0	4.0	4.0	4.0	4.0	4.0	4.0	4.0
	25	SHC	4.5	4.5	4.5	4.5	4.5	4.5	4.5	4.5	4.5	4.5	4.5	4.5	4.5	4.5	4.5
	27	SHC	5.0	5.0	5.0	5.0	5.0	5.0	5.0	5.0	5.0	5.0	5.0	5.0	5.0	5.0	5.0
	29	SHC	5.5	5.5	5.5	5.5	5.5	5.5	5.5	5.5	5.5	5.5	5.5	5.5	5.5	5.5	5.5
	31	SHC	6.0	6.0	6.0	6.0	6.0	6.0	6.0	6.0	6.0	6.0	6.0	6.0	6.0	6.0	6.0
19		TC	7.3	7.3	7.3	7.3	7.3	7.3	7.3	7.3	7.3	7.3	7.3	7.3	7.3	7.3	7.3
	21	SHC	3.3	3.3	3.3	3.3	3.3	3.3	3.3	3.3	3.3	3.3	3.3	3.3	3.3	3.3	3.3
	23	SHC	3.8	3.8	3.8	3.8	3.8	3.8	3.8	3.8	3.8	3.8	3.8	3.8	3.8	3.8	3.8
	25	SHC	4.3	4.3	4.3	4.3	4.3	4.3	4.3	4.3	4.3	4.3	4.3	4.3	4.3	4.3	4.3
	27	SHC	4.8	4.8	4.8	4.8	4.8	4.8	4.8	4.8	4.8	4.8	4.8	4.8	4.8	4.8	4.8
	29	SHC	5.3	5.3	5.3	5.3	5.3	5.3	5.3	5.3	5.3	5.3	5.3	5.3	5.3	5.3	5.3
	31	SHC	5.8	5.8	5.8	5.8	5.8	5.8	5.8	5.8	5.8	5.8	5.8	5.8	5.8	5.8	5.8
20		TC	7.8	7.8	7.8	7.8	7.8	7.8	7.8	7.8	7.8	7.8	7.8	7.8	7.8	7.8	7.6
	23	SHC	3.7	3.7	3.7	3.7	3.7	3.7	3.7	3.7	3.7	3.7	3.7	3.7	3.7	3.6	3.6
	25	SHC	4.2	4.2	4.2	4.2	4.2	4.2	4.2	4.2	4.2	4.2	4.2	4.2	4.2	4.2	4.1
	27	SHC	4.7	4.7	4.7	4.7	4.7	4.7	4.7	4.7	4.7	4.7	4.7	4.7	4.7	4.7	4.6
	29	SHC	5.2	5.2	5.2	5.2	5.2	5.2	5.2	5.2	5.2	5.2	5.2	5.2	5.2	5.2	5.1
	31	SHC	5.7	5.7	5.7	5.7	5.7	5.7	5.7	5.7	5.7	5.7	5.7	5.7	5.7	5.7	5.6
21		TC	8.3	8.3	8.3	8.3	8.3	8.3	8.3	8.3	8.3	8.3	8.3	8.3	8.2	7.9	7.8
	23	SHC	3.5	3.5	3.5	3.5	3.5	3.5	3.5	3.5	3.5	3.5	3.5	3.5	3.4	3.3	3.3
	25	SHC	4.0	4.0	4.0	4.0	4.0	4.0	4.0	4.0	4.0	4.0	4.0	4.0	4.0	3.8	3.8
	27	SHC	4.5	4.5	4.5	4.5	4.5	4.5	4.5	4.5	4.5	4.5	4.5	4.5	4.5	4.3	4.3
	29	SHC	5.0	5.0	5.0	5.0	5.0	5.0	5.0	5.0	5.0	5.0	5.0	5.0	5.0	4.8	4.8
	31	SHC	5.5	5.5	5.5	5.5	5.5	5.5	5.5	5.5	5.5	5.5	5.5	5.5	5.5	5.4	5.3
22		TC	8.8	8.8	8.8	8.8	8.8	8.8	8.8	8.8	8.8	8.8	8.8	8.6	8.3	8.1	8.0
	25	SHC	3.8	3.8	3.8	3.8	3.8	3.8	3.8	3.8	3.8	3.8	3.8	3.7	3.6	3.5	3.5
	27	SHC	4.3	4.3	4.3	4.3	4.3	4.3	4.3	4.3	4.3	4.3	4.3	4.2	4.1	4.0	4.0
	29	SHC	4.8	4.8	4.8	4.8	4.8	4.8	4.8	4.8	4.8	4.8	4.8	4.7	4.6	4.5	4.5
	31	SHC	5.3	5.3	5.3	5.3	5.3	5.3	5.3	5.3	5.3	5.3	5.3	5.3	5.1	5.0	5.0
23		TC	9.2	9.2	9.2	9.2	9.2	9.2	9.2	9.2	9.2	9.2	9.0	8.7	8.5	8.2	8.1
	25	SHC	3.6	3.6	3.6	3.6	3.6	3.6	3.6	3.6	3.6	3.6	3.5	3.4	3.3	3.2	3.2
	27	SHC	4.1	4.1	4.1	4.1	4.1	4.1	4.1	4.1	4.1	4.1	4.0	3.9	3.8	3.7	3.7
	29	SHC	4.7	4.7	4.7	4.7	4.7	4.7	4.7	4.7	4.7	4.7	4.5	4.4	4.3	4.2	4.2
	31	SHC	5.2	5.2	5.2	5.2	5.2	5.2	5.2	5.2	5.2	5.2	5.0	4.9	4.8	4.7	4.7

3. Cooling Capacity of Indoor Unit

3-5. Wall Mounted Type (K1 Type)

- S-22MK1E5

Power supply :220/230/240V 1phase-50,60Hz TC : Total Cooling Capacity (kW) SHC : Sensible Heat Capacity (kW)
This data is when the indoor unit connects with 16HP outdoor unit.

RATING CAPACITY:		2.2 kW	AIR FLOW RATE: 9.0 m³/min														
EVAPORATOR			CONDENSER														
AIR INTAKE. TEMP			AMBIENT TEMP. (°C)														
W.B.	D.B.		15	17	19	21	23	25	27	29	31	33	35	37	39	41	43
14		TC	1.5	1.5	1.5	1.5	1.5	1.5	1.5	1.5	1.5	1.5	1.5	1.5	1.5	1.5	1.5
	21	SHC	1.5	1.5	1.5	1.5	1.5	1.5	1.5	1.5	1.5	1.5	1.5	1.5	1.5	1.5	1.5
	23	SHC	1.5	1.5	1.5	1.5	1.5	1.5	1.5	1.5	1.5	1.5	1.5	1.5	1.5	1.5	1.5
	25	SHC	1.5	1.5	1.5	1.5	1.5	1.5	1.5	1.5	1.5	1.5	1.5	1.5	1.5	1.5	1.5
	27	SHC	1.5	1.5	1.5	1.5	1.5	1.5	1.5	1.5	1.5	1.5	1.5	1.5	1.5	1.5	1.5
15		TC	1.6	1.6	1.6	1.6	1.6	1.6	1.6	1.6	1.6	1.6	1.6	1.6	1.6	1.6	1.6
	21	SHC	1.4	1.4	1.4	1.4	1.4	1.4	1.4	1.4	1.4	1.4	1.4	1.4	1.4	1.4	1.4
	23	SHC	1.6	1.6	1.6	1.6	1.6	1.6	1.6	1.6	1.6	1.6	1.6	1.6	1.6	1.6	1.6
	25	SHC	1.6	1.6	1.6	1.6	1.6	1.6	1.6	1.6	1.6	1.6	1.6	1.6	1.6	1.6	1.6
	27	SHC	1.6	1.6	1.6	1.6	1.6	1.6	1.6	1.6	1.6	1.6	1.6	1.6	1.6	1.6	1.6
16		TC	1.8	1.8	1.8	1.8	1.8	1.8	1.8	1.8	1.8	1.8	1.8	1.8	1.8	1.8	1.8
	21	SHC	1.4	1.4	1.4	1.4	1.4	1.4	1.4	1.4	1.4	1.4	1.4	1.4	1.4	1.4	1.4
	23	SHC	1.6	1.6	1.6	1.6	1.6	1.6	1.6	1.6	1.6	1.6	1.6	1.6	1.6	1.6	1.6
	25	SHC	1.8	1.8	1.8	1.8	1.8	1.8	1.8	1.8	1.8	1.8	1.8	1.8	1.8	1.8	1.8
	27	SHC	1.8	1.8	1.8	1.8	1.8	1.8	1.8	1.8	1.8	1.8	1.8	1.8	1.8	1.8	1.8
	29	SHC	1.8	1.8	1.8	1.8	1.8	1.8	1.8	1.8	1.8	1.8	1.8	1.8	1.8	1.8	1.8
17		TC	1.9	1.9	1.9	1.9	1.9	1.9	1.9	1.9	1.9	1.9	1.9	1.9	1.9	1.9	1.9
	21	SHC	1.3	1.3	1.3	1.3	1.3	1.3	1.3	1.3	1.3	1.3	1.3	1.3	1.3	1.3	1.3
	23	SHC	1.5	1.5	1.5	1.5	1.5	1.5	1.5	1.5	1.5	1.5	1.5	1.5	1.5	1.5	1.5
	25	SHC	1.8	1.8	1.8	1.8	1.8	1.8	1.8	1.8	1.8	1.8	1.8	1.8	1.8	1.8	1.8
	27	SHC	1.9	1.9	1.9	1.9	1.9	1.9	1.9	1.9	1.9	1.9	1.9	1.9	1.9	1.9	1.9
	29	SHC	1.9	1.9	1.9	1.9	1.9	1.9	1.9	1.9	1.9	1.9	1.9	1.9	1.9	1.9	1.9
18		TC	2.1	2.1	2.1	2.1	2.1	2.1	2.1	2.1	2.1	2.1	2.1	2.1	2.1	2.1	2.1
	21	SHC	1.2	1.2	1.2	1.2	1.2	1.2	1.2	1.2	1.2	1.2	1.2	1.2	1.2	1.2	1.2
	23	SHC	1.4	1.4	1.4	1.4	1.4	1.4	1.4	1.4	1.4	1.4	1.4	1.4	1.4	1.4	1.4
	25	SHC	1.7	1.7	1.7	1.7	1.7	1.7	1.7	1.7	1.7	1.7	1.7	1.7	1.7	1.7	1.7
	27	SHC	2.0	2.0	2.0	2.0	2.0	2.0	2.0	2.0	2.0	2.0	2.0	2.0	2.0	2.0	2.0
	29	SHC	2.1	2.1	2.1	2.1	2.1	2.1	2.1	2.1	2.1	2.1	2.1	2.1	2.1	2.1	2.1
	31	SHC	2.1	2.1	2.1	2.1	2.1	2.1	2.1	2.1	2.1	2.1	2.1	2.1	2.1	2.1	2.1
19		TC	2.2	2.2	2.2	2.2	2.2	2.2	2.2	2.2	2.2	2.2	2.2	2.2	2.2	2.2	2.2
	21	SHC	1.0	1.0	1.0	1.0	1.0	1.0	1.0	1.0	1.0	1.0	1.0	1.0	1.0	1.0	1.0
	23	SHC	1.3	1.3	1.3	1.3	1.3	1.3	1.3	1.3	1.3	1.3	1.3	1.3	1.3	1.3	1.3
	25	SHC	1.6	1.6	1.6	1.6	1.6	1.6	1.6	1.6	1.6	1.6	1.6	1.6	1.6	1.6	1.6
	27	SHC	1.9	1.9	1.9	1.9	1.9	1.9	1.9	1.9	1.9	1.9	1.9	1.9	1.9	1.9	1.9
	29	SHC	2.1	2.1	2.1	2.1	2.1	2.1	2.1	2.1	2.1	2.1	2.1	2.1	2.1	2.1	2.1
	31	SHC	2.2	2.2	2.2	2.2	2.2	2.2	2.2	2.2	2.2	2.2	2.2	2.2	2.2	2.2	2.2
20		TC	2.3	2.3	2.3	2.3	2.3	2.3	2.3	2.3	2.3	2.3	2.3	2.3	2.3	2.3	2.3
	23	SHC	1.2	1.2	1.2	1.2	1.2	1.2	1.2	1.2	1.2	1.2	1.2	1.2	1.2	1.2	1.2
	25	SHC	1.5	1.5	1.5	1.5	1.5	1.5	1.5	1.5	1.5	1.5	1.5	1.5	1.5	1.5	1.5
	27	SHC	1.7	1.7	1.7	1.7	1.7	1.7	1.7	1.7	1.7	1.7	1.7	1.7	1.7	1.7	1.7
	29	SHC	2.0	2.0	2.0	2.0	2.0	2.0	2.0	2.0	2.0	2.0	2.0	2.0	2.0	2.0	2.0
	31	SHC	2.3	2.3	2.3	2.3	2.3	2.3	2.3	2.3	2.3	2.3	2.3	2.3	2.3	2.3	2.3
21		TC	2.5	2.5	2.5	2.5	2.5	2.5	2.5	2.5	2.5	2.5	2.5	2.5	2.5	2.4	2.3
	23	SHC	1.1	1.1	1.1	1.1	1.1	1.1	1.1	1.1	1.1	1.1	1.1	1.1	1.1	1.1	1.0
	25	SHC	1.4	1.4	1.4	1.4	1.4	1.4	1.4	1.4	1.4	1.4	1.4	1.4	1.3	1.3	1.3
	27	SHC	1.6	1.6	1.6	1.6	1.6	1.6	1.6	1.6	1.6	1.6	1.6	1.6	1.6	1.6	1.6
	29	SHC	1.9	1.9	1.9	1.9	1.9	1.9	1.9	1.9	1.9	1.9	1.9	1.9	1.9	1.9	1.8
	31	SHC	2.2	2.2	2.2	2.2	2.2	2.2	2.2	2.2	2.2	2.2	2.2	2.2	2.2	2.1	2.1
22		TC	2.6	2.6	2.6	2.6	2.6	2.6	2.6	2.6	2.6	2.6	2.6	2.6	2.5	2.4	2.4
	25	SHC	1.2	1.2	1.2	1.2	1.2	1.2	1.2	1.2	1.2	1.2	1.2	1.2	1.2	1.2	1.2
	27	SHC	1.5	1.5	1.5	1.5	1.5	1.5	1.5	1.5	1.5	1.5	1.5	1.5	1.5	1.4	1.4
	29	SHC	1.8	1.8	1.8	1.8	1.8	1.8	1.8	1.8	1.8	1.8	1.8	1.8	1.7	1.7	1.7
	31	SHC	2.1	2.1	2.1	2.1	2.1	2.1	2.1	2.1	2.1	2.1	2.1	2.0	2.0	2.0	2.0
23		TC	2.8	2.8	2.8	2.8	2.8	2.8	2.8	2.8	2.8	2.8	2.7	2.6	2.6	2.5	2.4
	25	SHC	1.1	1.1	1.1	1.1	1.1	1.1	1.1	1.1	1.1	1.1	1.1	1.1	1.0	1.0	1.0
	27	SHC	1.4	1.4	1.4	1.4	1.4	1.4	1.4	1.4	1.4	1.4	1.4	1.3	1.3	1.3	1.3
	29	SHC	1.7	1.7	1.7	1.7	1.7	1.7	1.7	1.7	1.7	1.7	1.6	1.6	1.6	1.6	1.5
	31	SHC	1.9	1.9	1.9	1.9	1.9	1.9	1.9	1.9	1.9	1.9	1.9	1.9	1.9	1.8	1.8

3. Cooling Capacity of Indoor Unit

● S-28MK1E5

Power supply : 220/230/240V 1phase-50,60Hz TC : Total Cooling Capacity (kW) SHC : Sensible Heat Capacity (kW)

This data is when the indoor unit connects with 16HP outdoor unit.

RATING CAPACITY:		2.8 kW	AIR FLOW RATE: 9.0 m³/min														
EVAPORATOR			CONDENSER														
AIR INTAKE. TEMP			AMBIENT TEMP. (°C)														
W.B.	D.B.		15	17	19	21	23	25	27	29	31	33	35	37	39	41	43
14		TC	1.9	1.9	1.9	1.9	1.9	1.9	1.9	1.9	1.9	1.9	1.9	1.9	1.9	1.9	1.9
	21	SHC	1.6	1.6	1.6	1.6	1.6	1.6	1.6	1.6	1.6	1.6	1.6	1.6	1.6	1.6	1.6
	23	SHC	1.8	1.8	1.8	1.8	1.8	1.8	1.8	1.8	1.8	1.8	1.8	1.8	1.8	1.8	1.8
	25	SHC	1.9	1.9	1.9	1.9	1.9	1.9	1.9	1.9	1.9	1.9	1.9	1.9	1.9	1.9	1.9
	27	SHC	1.9	1.9	1.9	1.9	1.9	1.9	1.9	1.9	1.9	1.9	1.9	1.9	1.9	1.9	1.9
15		TC	2.1	2.1	2.1	2.1	2.1	2.1	2.1	2.1	2.1	2.1	2.1	2.1	2.1	2.1	2.1
	21	SHC	1.5	1.5	1.5	1.5	1.5	1.5	1.5	1.5	1.5	1.5	1.5	1.5	1.5	1.5	1.5
	23	SHC	1.8	1.8	1.8	1.8	1.8	1.8	1.8	1.8	1.8	1.8	1.8	1.8	1.8	1.8	1.8
	25	SHC	2.0	2.0	2.0	2.0	2.0	2.0	2.0	2.0	2.0	2.0	2.0	2.0	2.0	2.0	2.0
	27	SHC	2.1	2.1	2.1	2.1	2.1	2.1	2.1	2.1	2.1	2.1	2.1	2.1	2.1	2.1	2.1
16		TC	2.2	2.2	2.2	2.2	2.2	2.2	2.2	2.2	2.2	2.2	2.2	2.2	2.2	2.2	2.2
	21	SHC	1.5	1.5	1.5	1.5	1.5	1.5	1.5	1.5	1.5	1.5	1.5	1.5	1.5	1.5	1.5
	23	SHC	1.7	1.7	1.7	1.7	1.7	1.7	1.7	1.7	1.7	1.7	1.7	1.7	1.7	1.7	1.7
	25	SHC	1.9	1.9	1.9	1.9	1.9	1.9	1.9	1.9	1.9	1.9	1.9	1.9	1.9	1.9	1.9
	27	SHC	2.2	2.2	2.2	2.2	2.2	2.2	2.2	2.2	2.2	2.2	2.2	2.2	2.2	2.2	2.2
	29	SHC	2.2	2.2	2.2	2.2	2.2	2.2	2.2	2.2	2.2	2.2	2.2	2.2	2.2	2.2	2.2
17		TC	2.4	2.4	2.4	2.4	2.4	2.4	2.4	2.4	2.4	2.4	2.4	2.4	2.4	2.4	2.4
	21	SHC	1.4	1.4	1.4	1.4	1.4	1.4	1.4	1.4	1.4	1.4	1.4	1.4	1.4	1.4	1.4
	23	SHC	1.6	1.6	1.6	1.6	1.6	1.6	1.6	1.6	1.6	1.6	1.6	1.6	1.6	1.6	1.6
	25	SHC	1.9	1.9	1.9	1.9	1.9	1.9	1.9	1.9	1.9	1.9	1.9	1.9	1.9	1.9	1.9
	27	SHC	2.1	2.1	2.1	2.1	2.1	2.1	2.1	2.1	2.1	2.1	2.1	2.1	2.1	2.1	2.1
	29	SHC	2.3	2.3	2.3	2.3	2.3	2.3	2.3	2.3	2.3	2.3	2.3	2.3	2.3	2.3	2.3
18		TC	2.6	2.6	2.6	2.6	2.6	2.6	2.6	2.6	2.6	2.6	2.6	2.6	2.6	2.6	2.6
	21	SHC	1.3	1.3	1.3	1.3	1.3	1.3	1.3	1.3	1.3	1.3	1.3	1.3	1.3	1.3	1.3
	23	SHC	1.6	1.6	1.6	1.6	1.6	1.6	1.6	1.6	1.6	1.6	1.6	1.6	1.6	1.6	1.6
	25	SHC	1.8	1.8	1.8	1.8	1.8	1.8	1.8	1.8	1.8	1.8	1.8	1.8	1.8	1.8	1.8
	27	SHC	2.0	2.0	2.0	2.0	2.0	2.0	2.0	2.0	2.0	2.0	2.0	2.0	2.0	2.0	2.0
	29	SHC	2.3	2.3	2.3	2.3	2.3	2.3	2.3	2.3	2.3	2.3	2.3	2.3	2.3	2.3	2.3
	31	SHC	2.5	2.5	2.5	2.5	2.5	2.5	2.5	2.5	2.5	2.5	2.5	2.5	2.5	2.5	2.5
19		TC	2.8	2.8	2.8	2.8	2.8	2.8	2.8	2.8	2.8	2.8	2.8	2.8	2.8	2.8	2.8
	21	SHC	1.3	1.3	1.3	1.3	1.3	1.3	1.3	1.3	1.3	1.3	1.3	1.3	1.3	1.3	1.3
	23	SHC	1.5	1.5	1.5	1.5	1.5	1.5	1.5	1.5	1.5	1.5	1.5	1.5	1.5	1.5	1.5
	25	SHC	1.7	1.7	1.7	1.7	1.7	1.7	1.7	1.7	1.7	1.7	1.7	1.7	1.7	1.7	1.7
	27	SHC	2.0	2.0	2.0	2.0	2.0	2.0	2.0	2.0	2.0	2.0	2.0	2.0	2.0	2.0	2.0
	29	SHC	2.2	2.2	2.2	2.2	2.2	2.2	2.2	2.2	2.2	2.2	2.2	2.2	2.2	2.2	2.2
	31	SHC	2.4	2.4	2.4	2.4	2.4	2.4	2.4	2.4	2.4	2.4	2.4	2.4	2.4	2.4	2.4
20		TC	3.0	3.0	3.0	3.0	3.0	3.0	3.0	3.0	3.0	3.0	3.0	3.0	3.0	3.0	2.9
	23	SHC	1.4	1.4	1.4	1.4	1.4	1.4	1.4	1.4	1.4	1.4	1.4	1.4	1.4	1.4	1.4
	25	SHC	1.6	1.6	1.6	1.6	1.6	1.6	1.6	1.6	1.6	1.6	1.6	1.6	1.6	1.6	1.6
	27	SHC	1.9	1.9	1.9	1.9	1.9	1.9	1.9	1.9	1.9	1.9	1.9	1.9	1.9	1.9	1.9
	29	SHC	2.1	2.1	2.1	2.1	2.1	2.1	2.1	2.1	2.1	2.1	2.1	2.1	2.1	2.1	2.1
	31	SHC	2.3	2.3	2.3	2.3	2.3	2.3	2.3	2.3	2.3	2.3	2.3	2.3	2.3	2.3	2.3
21		TC	3.2	3.2	3.2	3.2	3.2	3.2	3.2	3.2	3.2	3.2	3.2	3.2	3.1	3.0	3.0
	23	SHC	1.3	1.3	1.3	1.3	1.3	1.3	1.3	1.3	1.3	1.3	1.3	1.3	1.3	1.3	1.3
	25	SHC	1.6	1.6	1.6	1.6	1.6	1.6	1.6	1.6	1.6	1.6	1.6	1.6	1.5	1.5	1.5
	27	SHC	1.8	1.8	1.8	1.8	1.8	1.8	1.8	1.8	1.8	1.8	1.8	1.8	1.8	1.7	1.7
	29	SHC	2.0	2.0	2.0	2.0	2.0	2.0	2.0	2.0	2.0	2.0	2.0	2.0	2.0	2.0	1.9
	31	SHC	2.2	2.2	2.2	2.2	2.2	2.2	2.2	2.2	2.2	2.2	2.2	2.2	2.2	2.2	2.2
22		TC	3.4	3.4	3.4	3.4	3.4	3.4	3.4	3.4	3.4	3.4	3.4	3.3	3.2	3.1	3.1
	25	SHC	1.5	1.5	1.5	1.5	1.5	1.5	1.5	1.5	1.5	1.5	1.5	1.4	1.4	1.4	1.4
	27	SHC	1.7	1.7	1.7	1.7	1.7	1.7	1.7	1.7	1.7	1.7	1.7	1.7	1.6	1.6	1.6
	29	SHC	1.9	1.9	1.9	1.9	1.9	1.9	1.9	1.9	1.9	1.9	1.9	1.9	1.9	1.8	1.8
	31	SHC	2.2	2.2	2.2	2.2	2.2	2.2	2.2	2.2	2.2	2.2	2.2	2.1	2.1	2.1	2.0
23		TC	3.5	3.5	3.5	3.5	3.5	3.5	3.5	3.5	3.5	3.5	3.4	3.3	3.3	3.2	3.1
	25	SHC	1.4	1.4	1.4	1.4	1.4	1.4	1.4	1.4	1.4	1.4	1.3	1.3	1.3	1.2	1.2
	27	SHC	1.6	1.6	1.6	1.6	1.6	1.6	1.6	1.6	1.6	1.6	1.6	1.5	1.5	1.5	1.4
	29	SHC	1.8	1.8	1.8	1.8	1.8	1.8	1.8	1.8	1.8	1.8	1.8	1.8	1.7	1.7	1.7
	31	SHC	2.1	2.1	2.1	2.1	2.1	2.1	2.1	2.1	2.1	2.1	2.0	2.0	2.0	1.9	1.9

3. Cooling Capacity of Indoor Unit

• S-36MK1E5

Power supply : 220/230/240V 1phase-50,60Hz TC : Total Cooling Capacity (kW) SHC : Sensible Heat Capacity (kW)

This data is when the indoor unit connects with 16HP outdoor unit.

RATING CAPACITY:		3.6 kW	AIR FLOW RATE:10.0 m³/min														
EVAPORATOR			CONDENSER														
AIR INTAKE. TEMP			AMBIENT TEMP. (°C)														
W.B.	D.B.		15	17	19	21	23	25	27	29	31	33	35	37	39	41	43
14		TC	2.4	2.4	2.4	2.4	2.4	2.4	2.4	2.4	2.4	2.4	2.4	2.4	2.4	2.4	2.4
	21	SHC	1.8	1.8	1.8	1.8	1.8	1.8	1.8	1.8	1.8	1.8	1.8	1.8	1.8	1.8	1.8
	23	SHC	2.0	2.0	2.0	2.0	2.0	2.0	2.0	2.0	2.0	2.0	2.0	2.0	2.0	2.0	2.0
	25	SHC	2.2	2.2	2.2	2.2	2.2	2.2	2.2	2.2	2.2	2.2	2.2	2.2	2.2	2.2	2.2
	27	SHC	2.4	2.4	2.4	2.4	2.4	2.4	2.4	2.4	2.4	2.4	2.4	2.4	2.4	2.4	2.4
15		TC	2.6	2.6	2.6	2.6	2.6	2.6	2.6	2.6	2.6	2.6	2.6	2.6	2.6	2.6	2.6
	21	SHC	1.8	1.8	1.8	1.8	1.8	1.8	1.8	1.8	1.8	1.8	1.8	1.8	1.8	1.8	1.8
	23	SHC	2.0	2.0	2.0	2.0	2.0	2.0	2.0	2.0	2.0	2.0	2.0	2.0	2.0	2.0	2.0
	25	SHC	2.2	2.2	2.2	2.2	2.2	2.2	2.2	2.2	2.2	2.2	2.2	2.2	2.2	2.2	2.2
	27	SHC	2.4	2.4	2.4	2.4	2.4	2.4	2.4	2.4	2.4	2.4	2.4	2.4	2.4	2.4	2.4
16		TC	2.9	2.9	2.9	2.9	2.9	2.9	2.9	2.9	2.9	2.9	2.9	2.9	2.9	2.9	2.9
	21	SHC	1.8	1.8	1.8	1.8	1.8	1.8	1.8	1.8	1.8	1.8	1.8	1.8	1.8	1.8	1.8
	23	SHC	2.0	2.0	2.0	2.0	2.0	2.0	2.0	2.0	2.0	2.0	2.0	2.0	2.0	2.0	2.0
	25	SHC	2.1	2.1	2.1	2.1	2.1	2.1	2.1	2.1	2.1	2.1	2.1	2.1	2.1	2.1	2.1
	27	SHC	2.3	2.3	2.3	2.3	2.3	2.3	2.3	2.3	2.3	2.3	2.3	2.3	2.3	2.3	2.3
	29	SHC	2.5	2.5	2.5	2.5	2.5	2.5	2.5	2.5	2.5	2.5	2.5	2.5	2.5	2.5	2.5
17		TC	3.1	3.1	3.1	3.1	3.1	3.1	3.1	3.1	3.1	3.1	3.1	3.1	3.1	3.1	3.1
	21	SHC	1.7	1.7	1.7	1.7	1.7	1.7	1.7	1.7	1.7	1.7	1.7	1.7	1.7	1.7	1.7
	23	SHC	1.9	1.9	1.9	1.9	1.9	1.9	1.9	1.9	1.9	1.9	1.9	1.9	1.9	1.9	1.9
	25	SHC	2.1	2.1	2.1	2.1	2.1	2.1	2.1	2.1	2.1	2.1	2.1	2.1	2.1	2.1	2.1
	27	SHC	2.3	2.3	2.3	2.3	2.3	2.3	2.3	2.3	2.3	2.3	2.3	2.3	2.3	2.3	2.3
	29	SHC	2.5	2.5	2.5	2.5	2.5	2.5	2.5	2.5	2.5	2.5	2.5	2.5	2.5	2.5	2.5
18		TC	3.4	3.4	3.4	3.4	3.4	3.4	3.4	3.4	3.4	3.4	3.4	3.4	3.4	3.4	3.4
	21	SHC	1.7	1.7	1.7	1.7	1.7	1.7	1.7	1.7	1.7	1.7	1.7	1.7	1.7	1.7	1.7
	23	SHC	1.9	1.9	1.9	1.9	1.9	1.9	1.9	1.9	1.9	1.9	1.9	1.9	1.9	1.9	1.9
	25	SHC	2.1	2.1	2.1	2.1	2.1	2.1	2.1	2.1	2.1	2.1	2.1	2.1	2.1	2.1	2.1
	27	SHC	2.3	2.3	2.3	2.3	2.3	2.3	2.3	2.3	2.3	2.3	2.3	2.3	2.3	2.3	2.3
	29	SHC	2.5	2.5	2.5	2.5	2.5	2.5	2.5	2.5	2.5	2.5	2.5	2.5	2.5	2.5	2.5
	31	SHC	2.7	2.7	2.7	2.7	2.7	2.7	2.7	2.7	2.7	2.7	2.7	2.7	2.7	2.7	2.7
19		TC	3.6	3.6	3.6	3.6	3.6	3.6	3.6	3.6	3.6	3.6	3.6	3.6	3.6	3.6	3.6
	21	SHC	1.7	1.7	1.7	1.7	1.7	1.7	1.7	1.7	1.7	1.7	1.7	1.7	1.7	1.7	1.7
	23	SHC	1.9	1.9	1.9	1.9	1.9	1.9	1.9	1.9	1.9	1.9	1.9	1.9	1.9	1.9	1.9
	25	SHC	2.1	2.1	2.1	2.1	2.1	2.1	2.1	2.1	2.1	2.1	2.1	2.1	2.1	2.1	2.1
	27	SHC	2.3	2.3	2.3	2.3	2.3	2.3	2.3	2.3	2.3	2.3	2.3	2.3	2.3	2.3	2.3
	29	SHC	2.5	2.5	2.5	2.5	2.5	2.5	2.5	2.5	2.5	2.5	2.5	2.5	2.5	2.5	2.5
	31	SHC	2.6	2.6	2.6	2.6	2.6	2.6	2.6	2.6	2.6	2.6	2.6	2.6	2.6	2.6	2.6
20		TC	3.8	3.8	3.8	3.8	3.8	3.8	3.8	3.8	3.8	3.8	3.8	3.8	3.8	3.8	3.8
	23	SHC	1.8	1.8	1.8	1.8	1.8	1.8	1.8	1.8	1.8	1.8	1.8	1.8	1.8	1.8	1.8
	25	SHC	2.0	2.0	2.0	2.0	2.0	2.0	2.0	2.0	2.0	2.0	2.0	2.0	2.0	2.0	2.0
	27	SHC	2.2	2.2	2.2	2.2	2.2	2.2	2.2	2.2	2.2	2.2	2.2	2.2	2.2	2.2	2.2
	29	SHC	2.4	2.4	2.4	2.4	2.4	2.4	2.4	2.4	2.4	2.4	2.4	2.4	2.4	2.4	2.4
	31	SHC	2.6	2.6	2.6	2.6	2.6	2.6	2.6	2.6	2.6	2.6	2.6	2.6	2.6	2.6	2.6
21		TC	4.1	4.1	4.1	4.1	4.1	4.1	4.1	4.1	4.1	4.1	4.1	4.1	4.0	3.9	3.8
	23	SHC	1.8	1.8	1.8	1.8	1.8	1.8	1.8	1.8	1.8	1.8	1.8	1.8	1.7	1.7	1.7
	25	SHC	2.0	2.0	2.0	2.0	2.0	2.0	2.0	2.0	2.0	2.0	2.0	2.0	1.9	1.9	1.9
	27	SHC	2.2	2.2	2.2	2.2	2.2	2.2	2.2	2.2	2.2	2.2	2.2	2.2	2.1	2.1	2.1
	29	SHC	2.4	2.4	2.4	2.4	2.4	2.4	2.4	2.4	2.4	2.4	2.4	2.4	2.3	2.3	2.2
	31	SHC	2.6	2.6	2.6	2.6	2.6	2.6	2.6	2.6	2.6	2.6	2.6	2.6	2.5	2.5	2.4
22		TC	4.3	4.3	4.3	4.3	4.3	4.3	4.3	4.3	4.3	4.3	4.3	4.2	4.1	4.0	3.9
	25	SHC	1.9	1.9	1.9	1.9	1.9	1.9	1.9	1.9	1.9	1.9	1.9	1.9	1.8	1.8	1.7
	27	SHC	2.1	2.1	2.1	2.1	2.1	2.1	2.1	2.1	2.1	2.1	2.1	2.1	2.0	1.9	1.9
	29	SHC	2.3	2.3	2.3	2.3	2.3	2.3	2.3	2.3	2.3	2.3	2.3	2.3	2.2	2.1	2.1
	31	SHC	2.5	2.5	2.5	2.5	2.5	2.5	2.5	2.5	2.5	2.5	2.5	2.5	2.4	2.3	2.3
23		TC	4.6	4.6	4.6	4.6	4.6	4.6	4.6	4.6	4.6	4.6	4.4	4.3	4.2	4.1	4.0
	25	SHC	1.9	1.9	1.9	1.9	1.9	1.9	1.9	1.9	1.9	1.9	1.8	1.7	1.7	1.6	1.6
	27	SHC	2.1	2.1	2.1	2.1	2.1	2.1	2.1	2.1	2.1	2.1	2.0	1.9	1.9	1.8	1.8
	29	SHC	2.2	2.2	2.2	2.2	2.2	2.2	2.2	2.2	2.2	2.2	2.2	2.1	2.1	2.0	2.0
	31	SHC	2.4	2.4	2.4	2.4	2.4	2.4	2.4	2.4	2.4	2.4	2.4	2.3	2.3	2.2	2.2

3. Cooling Capacity of Indoor Unit

● S-45MK1E5

Power supply : 220/230/240V 1phase-50,60Hz TC : Total Cooling Capacity (kW) SHC : Sensible Heat Capacity (kW)

This data is when the indoor unit connects with 16HP outdoor unit.

RATING CAPACITY:		4.5 kW	AIR FLOW RATE: 12.0 m³/min														
EVAPORATOR			CONDENSER														
AIR INTAKE. TEMP			AMBIENT TEMP. (°C)														
W.B.	D.B.		15	17	19	21	23	25	27	29	31	33	35	37	39	41	43
14		TC	3.0	3.0	3.0	3.0	3.0	3.0	3.0	3.0	3.0	3.0	3.0	3.0	3.0	3.0	3.0
	21	SHC	2.8	2.8	2.8	2.8	2.8	2.8	2.8	2.8	2.8	2.8	2.8	2.8	2.8	2.8	2.8
	23	SHC	3.0	3.0	3.0	3.0	3.0	3.0	3.0	3.0	3.0	3.0	3.0	3.0	3.0	3.0	3.0
	25	SHC	3.0	3.0	3.0	3.0	3.0	3.0	3.0	3.0	3.0	3.0	3.0	3.0	3.0	3.0	3.0
	27	SHC	3.0	3.0	3.0	3.0	3.0	3.0	3.0	3.0	3.0	3.0	3.0	3.0	3.0	3.0	3.0
15		TC	3.3	3.3	3.3	3.3	3.3	3.3	3.3	3.3	3.3	3.3	3.3	3.3	3.3	3.3	3.3
	21	SHC	2.7	2.7	2.7	2.7	2.7	2.7	2.7	2.7	2.7	2.7	2.7	2.7	2.7	2.7	2.7
	23	SHC	3.1	3.1	3.1	3.1	3.1	3.1	3.1	3.1	3.1	3.1	3.1	3.1	3.1	3.1	3.1
	25	SHC	3.3	3.3	3.3	3.3	3.3	3.3	3.3	3.3	3.3	3.3	3.3	3.3	3.3	3.3	3.3
	27	SHC	3.3	3.3	3.3	3.3	3.3	3.3	3.3	3.3	3.3	3.3	3.3	3.3	3.3	3.3	3.3
16		TC	3.6	3.6	3.6	3.6	3.6	3.6	3.6	3.6	3.6	3.6	3.6	3.6	3.6	3.6	3.6
	21	SHC	2.5	2.5	2.5	2.5	2.5	2.5	2.5	2.5	2.5	2.5	2.5	2.5	2.5	2.5	2.5
	23	SHC	3.0	3.0	3.0	3.0	3.0	3.0	3.0	3.0	3.0	3.0	3.0	3.0	3.0	3.0	3.0
	25	SHC	3.4	3.4	3.4	3.4	3.4	3.4	3.4	3.4	3.4	3.4	3.4	3.4	3.4	3.4	3.4
	27	SHC	3.6	3.6	3.6	3.6	3.6	3.6	3.6	3.6	3.6	3.6	3.6	3.6	3.6	3.6	3.6
	29	SHC	3.6	3.6	3.6	3.6	3.6	3.6	3.6	3.6	3.6	3.6	3.6	3.6	3.6	3.6	3.6
17		TC	3.9	3.9	3.9	3.9	3.9	3.9	3.9	3.9	3.9	3.9	3.9	3.9	3.9	3.9	3.9
	21	SHC	2.4	2.4	2.4	2.4	2.4	2.4	2.4	2.4	2.4	2.4	2.4	2.4	2.4	2.4	2.4
	23	SHC	2.8	2.8	2.8	2.8	2.8	2.8	2.8	2.8	2.8	2.8	2.8	2.8	2.8	2.8	2.8
	25	SHC	3.3	3.3	3.3	3.3	3.3	3.3	3.3	3.3	3.3	3.3	3.3	3.3	3.3	3.3	3.3
	27	SHC	3.7	3.7	3.7	3.7	3.7	3.7	3.7	3.7	3.7	3.7	3.7	3.7	3.7	3.7	3.7
	29	SHC	3.9	3.9	3.9	3.9	3.9	3.9	3.9	3.9	3.9	3.9	3.9	3.9	3.9	3.9	3.9
18		TC	4.2	4.2	4.2	4.2	4.2	4.2	4.2	4.2	4.2	4.2	4.2	4.2	4.2	4.2	4.2
	21	SHC	2.2	2.2	2.2	2.2	2.2	2.2	2.2	2.2	2.2	2.2	2.2	2.2	2.2	2.2	2.2
	23	SHC	2.7	2.7	2.7	2.7	2.7	2.7	2.7	2.7	2.7	2.7	2.7	2.7	2.7	2.7	2.7
	25	SHC	3.1	3.1	3.1	3.1	3.1	3.1	3.1	3.1	3.1	3.1	3.1	3.1	3.1	3.1	3.1
	27	SHC	3.5	3.5	3.5	3.5	3.5	3.5	3.5	3.5	3.5	3.5	3.5	3.5	3.5	3.5	3.5
	29	SHC	4.0	4.0	4.0	4.0	4.0	4.0	4.0	4.0	4.0	4.0	4.0	4.0	4.0	4.0	4.0
	31	SHC	4.2	4.2	4.2	4.2	4.2	4.2	4.2	4.2	4.2	4.2	4.2	4.2	4.2	4.2	4.2
19		TC	4.5	4.5	4.5	4.5	4.5	4.5	4.5	4.5	4.5	4.5	4.5	4.5	4.5	4.5	4.5
	21	SHC	2.1	2.1	2.1	2.1	2.1	2.1	2.1	2.1	2.1	2.1	2.1	2.1	2.1	2.1	2.1
	23	SHC	2.5	2.5	2.5	2.5	2.5	2.5	2.5	2.5	2.5	2.5	2.5	2.5	2.5	2.5	2.5
	25	SHC	2.9	2.9	2.9	2.9	2.9	2.9	2.9	2.9	2.9	2.9	2.9	2.9	2.9	2.9	2.9
	27	SHC	3.4	3.4	3.4	3.4	3.4	3.4	3.4	3.4	3.4	3.4	3.4	3.4	3.4	3.4	3.4
	29	SHC	3.8	3.8	3.8	3.8	3.8	3.8	3.8	3.8	3.8	3.8	3.8	3.8	3.8	3.8	3.8
	31	SHC	4.3	4.3	4.3	4.3	4.3	4.3	4.3	4.3	4.3	4.3	4.3	4.3	4.3	4.3	4.3
20		TC	4.8	4.8	4.8	4.8	4.8	4.8	4.8	4.8	4.8	4.8	4.8	4.8	4.8	4.8	4.7
	23	SHC	2.3	2.3	2.3	2.3	2.3	2.3	2.3	2.3	2.3	2.3	2.3	2.3	2.3	2.3	2.3
	25	SHC	2.8	2.8	2.8	2.8	2.8	2.8	2.8	2.8	2.8	2.8	2.8	2.8	2.8	2.8	2.7
	27	SHC	3.2	3.2	3.2	3.2	3.2	3.2	3.2	3.2	3.2	3.2	3.2	3.2	3.2	3.2	3.2
	29	SHC	3.6	3.6	3.6	3.6	3.6	3.6	3.6	3.6	3.6	3.6	3.6	3.6	3.6	3.6	3.6
	31	SHC	4.1	4.1	4.1	4.1	4.1	4.1	4.1	4.1	4.1	4.1	4.1	4.1	4.1	4.1	4.0
21		TC	5.1	5.1	5.1	5.1	5.1	5.1	5.1	5.1	5.1	5.1	5.1	5.1	5.0	4.9	4.8
	23	SHC	2.2	2.2	2.2	2.2	2.2	2.2	2.2	2.2	2.2	2.2	2.2	2.2	2.1	2.1	2.1
	25	SHC	2.6	2.6	2.6	2.6	2.6	2.6	2.6	2.6	2.6	2.6	2.6	2.6	2.6	2.5	2.5
	27	SHC	3.0	3.0	3.0	3.0	3.0	3.0	3.0	3.0	3.0	3.0	3.0	3.0	3.0	3.0	2.9
	29	SHC	3.5	3.5	3.5	3.5	3.5	3.5	3.5	3.5	3.5	3.5	3.5	3.5	3.5	3.4	3.4
	31	SHC	3.9	3.9	3.9	3.9	3.9	3.9	3.9	3.9	3.9	3.9	3.9	3.9	3.9	3.8	3.8
22		TC	5.4	5.4	5.4	5.4	5.4	5.4	5.4	5.4	5.4	5.4	5.4	5.3	5.1	5.0	4.9
	25	SHC	2.4	2.4	2.4	2.4	2.4	2.4	2.4	2.4	2.4	2.4	2.4	2.4	2.3	2.3	2.2
	27	SHC	2.9	2.9	2.9	2.9	2.9	2.9	2.9	2.9	2.9	2.9	2.9	2.8	2.8	2.7	2.7
	29	SHC	3.3	3.3	3.3	3.3	3.3	3.3	3.3	3.3	3.3	3.3	3.3	3.3	3.2	3.1	3.1
	31	SHC	3.7	3.7	3.7	3.7	3.7	3.7	3.7	3.7	3.7	3.7	3.7	3.7	3.6	3.6	3.6
23		TC	5.7	5.7	5.7	5.7	5.7	5.7	5.7	5.7	5.7	5.7	5.5	5.4	5.2	5.1	5.0
	25	SHC	2.2	2.2	2.2	2.2	2.2	2.2	2.2	2.2	2.2	2.2	2.2	2.1	2.1	2.0	2.0
	27	SHC	2.7	2.7	2.7	2.7	2.7	2.7	2.7	2.7	2.7	2.7	2.6	2.6	2.5	2.4	2.4
	29	SHC	3.1	3.1	3.1	3.1	3.1	3.1	3.1	3.1	3.1	3.1	3.1	3.0	2.9	2.9	2.9
	31	SHC	3.5	3.5	3.5	3.5	3.5	3.5	3.5	3.5	3.5	3.5	3.5	3.4	3.4	3.3	3.3

3. Cooling Capacity of Indoor Unit

• S-56MK1E5

Power supply : 220/230/240V 1phase-50,60Hz TC : Total Cooling Capacity (kW) SHC : Sensible Heat Capacity (kW)

This data is when the indoor unit connects with 16HP outdoor unit.

RATING CAPACITY:		5.6 kW AIR FLOW RATE: 14.0 m³/min															
EVAPORATOR		CONDENSER															
AIR INTAKE. TEMP		AMBIENT TEMP. (°C)															
W.B.	D.B.		15	17	19	21	23	25	27	29	31	33	35	37	39	41	43
14		TC	3.7	3.7	3.7	3.7	3.7	3.7	3.7	3.7	3.7	3.7	3.7	3.7	3.7	3.7	3.7
	21	SHC	3.3	3.3	3.3	3.3	3.3	3.3	3.3	3.3	3.3	3.3	3.3	3.3	3.3	3.3	3.3
	23	SHC	3.7	3.7	3.7	3.7	3.7	3.7	3.7	3.7	3.7	3.7	3.7	3.7	3.7	3.7	3.7
	25	SHC	3.7	3.7	3.7	3.7	3.7	3.7	3.7	3.7	3.7	3.7	3.7	3.7	3.7	3.7	3.7
	27	SHC	3.7	3.7	3.7	3.7	3.7	3.7	3.7	3.7	3.7	3.7	3.7	3.7	3.7	3.7	3.7
15		TC	4.1	4.1	4.1	4.1	4.1	4.1	4.1	4.1	4.1	4.1	4.1	4.1	4.1	4.1	4.1
	21	SHC	3.1	3.1	3.1	3.1	3.1	3.1	3.1	3.1	3.1	3.1	3.1	3.1	3.1	3.1	3.1
	23	SHC	3.6	3.6	3.6	3.6	3.6	3.6	3.6	3.6	3.6	3.6	3.6	3.6	3.6	3.6	3.6
	25	SHC	4.1	4.1	4.1	4.1	4.1	4.1	4.1	4.1	4.1	4.1	4.1	4.1	4.1	4.1	4.1
	27	SHC	4.1	4.1	4.1	4.1	4.1	4.1	4.1	4.1	4.1	4.1	4.1	4.1	4.1	4.1	4.1
16		TC	4.5	4.5	4.5	4.5	4.5	4.5	4.5	4.5	4.5	4.5	4.5	4.5	4.5	4.5	4.5
	21	SHC	3.0	3.0	3.0	3.0	3.0	3.0	3.0	3.0	3.0	3.0	3.0	3.0	3.0	3.0	3.0
	23	SHC	3.5	3.5	3.5	3.5	3.5	3.5	3.5	3.5	3.5	3.5	3.5	3.5	3.5	3.5	3.5
	25	SHC	4.0	4.0	4.0	4.0	4.0	4.0	4.0	4.0	4.0	4.0	4.0	4.0	4.0	4.0	4.0
	27	SHC	4.4	4.4	4.4	4.4	4.4	4.4	4.4	4.4	4.4	4.4	4.4	4.4	4.4	4.4	4.4
	29	SHC	4.5	4.5	4.5	4.5	4.5	4.5	4.5	4.5	4.5	4.5	4.5	4.5	4.5	4.5	4.5
17		TC	4.9	4.9	4.9	4.9	4.9	4.9	4.9	4.9	4.9	4.9	4.9	4.9	4.9	4.9	4.9
	21	SHC	2.9	2.9	2.9	2.9	2.9	2.9	2.9	2.9	2.9	2.9	2.9	2.9	2.9	2.9	2.9
	23	SHC	3.3	3.3	3.3	3.3	3.3	3.3	3.3	3.3	3.3	3.3	3.3	3.3	3.3	3.3	3.3
	25	SHC	3.8	3.8	3.8	3.8	3.8	3.8	3.8	3.8	3.8	3.8	3.8	3.8	3.8	3.8	3.8
	27	SHC	4.3	4.3	4.3	4.3	4.3	4.3	4.3	4.3	4.3	4.3	4.3	4.3	4.3	4.3	4.3
	29	SHC	4.8	4.8	4.8	4.8	4.8	4.8	4.8	4.8	4.8	4.8	4.8	4.8	4.8	4.8	4.8
18		TC	5.2	5.2	5.2	5.2	5.2	5.2	5.2	5.2	5.2	5.2	5.2	5.2	5.2	5.2	5.2
	21	SHC	2.7	2.7	2.7	2.7	2.7	2.7	2.7	2.7	2.7	2.7	2.7	2.7	2.7	2.7	2.7
	23	SHC	3.2	3.2	3.2	3.2	3.2	3.2	3.2	3.2	3.2	3.2	3.2	3.2	3.2	3.2	3.2
	25	SHC	3.7	3.7	3.7	3.7	3.7	3.7	3.7	3.7	3.7	3.7	3.7	3.7	3.7	3.7	3.7
	27	SHC	4.1	4.1	4.1	4.1	4.1	4.1	4.1	4.1	4.1	4.1	4.1	4.1	4.1	4.1	4.1
	29	SHC	4.6	4.6	4.6	4.6	4.6	4.6	4.6	4.6	4.6	4.6	4.6	4.6	4.6	4.6	4.6
	31	SHC	5.1	5.1	5.1	5.1	5.1	5.1	5.1	5.1	5.1	5.1	5.1	5.1	5.1	5.1	5.1
19		TC	5.6	5.6	5.6	5.6	5.6	5.6	5.6	5.6	5.6	5.6	5.6	5.6	5.6	5.6	5.6
	21	SHC	2.5	2.5	2.5	2.5	2.5	2.5	2.5	2.5	2.5	2.5	2.5	2.5	2.5	2.5	2.5
	23	SHC	3.0	3.0	3.0	3.0	3.0	3.0	3.0	3.0	3.0	3.0	3.0	3.0	3.0	3.0	3.0
	25	SHC	3.5	3.5	3.5	3.5	3.5	3.5	3.5	3.5	3.5	3.5	3.5	3.5	3.5	3.5	3.5
	27	SHC	4.0	4.0	4.0	4.0	4.0	4.0	4.0	4.0	4.0	4.0	4.0	4.0	4.0	4.0	4.0
	29	SHC	4.5	4.5	4.5	4.5	4.5	4.5	4.5	4.5	4.5	4.5	4.5	4.5	4.5	4.5	4.5
	31	SHC	4.9	4.9	4.9	4.9	4.9	4.9	4.9	4.9	4.9	4.9	4.9	4.9	4.9	4.9	4.9
20		TC	6.0	6.0	6.0	6.0	6.0	6.0	6.0	6.0	6.0	6.0	6.0	6.0	6.0	5.9	5.9
	23	SHC	2.9	2.9	2.9	2.9	2.9	2.9	2.9	2.9	2.9	2.9	2.9	2.9	2.9	2.8	2.8
	25	SHC	3.3	3.3	3.3	3.3	3.3	3.3	3.3	3.3	3.3	3.3	3.3	3.3	3.3	3.3	3.3
	27	SHC	3.8	3.8	3.8	3.8	3.8	3.8	3.8	3.8	3.8	3.8	3.8	3.8	3.8	3.8	3.8
	29	SHC	4.3	4.3	4.3	4.3	4.3	4.3	4.3	4.3	4.3	4.3	4.3	4.3	4.3	4.3	4.2
	31	SHC	4.8	4.8	4.8	4.8	4.8	4.8	4.8	4.8	4.8	4.8	4.8	4.8	4.8	4.8	4.7
21		TC	6.3	6.3	6.3	6.3	6.3	6.3	6.3	6.3	6.3	6.3	6.3	6.3	6.3	6.1	6.0
	23	SHC	2.7	2.7	2.7	2.7	2.7	2.7	2.7	2.7	2.7	2.7	2.7	2.7	2.6	2.6	2.5
	25	SHC	3.2	3.2	3.2	3.2	3.2	3.2	3.2	3.2	3.2	3.2	3.2	3.2	3.1	3.0	3.0
	27	SHC	3.6	3.6	3.6	3.6	3.6	3.6	3.6	3.6	3.6	3.6	3.6	3.6	3.6	3.5	3.5
	29	SHC	4.1	4.1	4.1	4.1	4.1	4.1	4.1	4.1	4.1	4.1	4.1	4.1	4.1	4.0	4.0
	31	SHC	4.6	4.6	4.6	4.6	4.6	4.6	4.6	4.6	4.6	4.6	4.6	4.6	4.6	4.5	4.4
22		TC	6.7	6.7	6.7	6.7	6.7	6.7	6.7	6.7	6.7	6.7	6.7	6.6	6.4	6.2	6.1
	25	SHC	3.0	3.0	3.0	3.0	3.0	3.0	3.0	3.0	3.0	3.0	3.0	2.9	2.8	2.8	2.7
	27	SHC	3.4	3.4	3.4	3.4	3.4	3.4	3.4	3.4	3.4	3.4	3.4	3.4	3.3	3.2	3.2
	29	SHC	3.9	3.9	3.9	3.9	3.9	3.9	3.9	3.9	3.9	3.9	3.9	3.9	3.8	3.7	3.7
	31	SHC	4.4	4.4	4.4	4.4	4.4	4.4	4.4	4.4	4.4	4.4	4.4	4.3	4.3	4.2	4.2
23		TC	7.1	7.1	7.1	7.1	7.1	7.1	7.1	7.1	7.1	7.1	6.9	6.7	6.5	6.3	6.2
	25	SHC	2.8	2.8	2.8	2.8	2.8	2.8	2.8	2.8	2.8	2.8	2.7	2.6	2.5	2.5	2.4
	27	SHC	3.2	3.2	3.2	3.2	3.2	3.2	3.2	3.2	3.2	3.2	3.2	3.1	3.0	3.0	2.9
	29	SHC	3.7	3.7	3.7	3.7	3.7	3.7	3.7	3.7	3.7	3.7	3.7	3.6	3.5	3.4	3.4
	31	SHC	4.2	4.2	4.2	4.2	4.2	4.2	4.2	4.2	4.2	4.2	4.1	4.1	4.0	3.9	3.9

3. Cooling Capacity of Indoor Unit

- S-73MK1E5

Power supply : 220/230/240V 1phase-50,60Hz TC : Total Cooling Capacity (kW) SHC : Sensible Heat Capacity (kW)
This data is when the indoor unit connects with 16HP outdoor unit.

RATING CAPACITY:		7.3 kW AIR FLOW RATE: 17.8 m³/min															
EVAPORATOR		CONDENSER															
AIR INTAKE. TEMP		AMBIENT TEMP. (°C)															
W.B.	D.B.		15	17	19	21	23	25	27	29	31	33	35	37	39	41	43
14		TC	4.9	4.9	4.9	4.9	4.9	4.9	4.9	4.9	4.9	4.9	4.9	4.9	4.9	4.9	4.9
	21	SHC	4.3	4.3	4.3	4.3	4.3	4.3	4.3	4.3	4.3	4.3	4.3	4.3	4.3	4.3	4.3
	23	SHC	4.9	4.9	4.9	4.9	4.9	4.9	4.9	4.9	4.9	4.9	4.9	4.9	4.9	4.9	4.9
	25	SHC	4.9	4.9	4.9	4.9	4.9	4.9	4.9	4.9	4.9	4.9	4.9	4.9	4.9	4.9	4.9
	27	SHC	4.9	4.9	4.9	4.9	4.9	4.9	4.9	4.9	4.9	4.9	4.9	4.9	4.9	4.9	4.9
15		TC	5.4	5.4	5.4	5.4	5.4	5.4	5.4	5.4	5.4	5.4	5.4	5.4	5.4	5.4	5.4
	21	SHC	4.1	4.1	4.1	4.1	4.1	4.1	4.1	4.1	4.1	4.1	4.1	4.1	4.1	4.1	4.1
	23	SHC	4.7	4.7	4.7	4.7	4.7	4.7	4.7	4.7	4.7	4.7	4.7	4.7	4.7	4.7	4.7
	25	SHC	5.3	5.3	5.3	5.3	5.3	5.3	5.3	5.3	5.3	5.3	5.3	5.3	5.3	5.3	5.3
	27	SHC	5.4	5.4	5.4	5.4	5.4	5.4	5.4	5.4	5.4	5.4	5.4	5.4	5.4	5.4	5.4
16		TC	5.8	5.8	5.8	5.8	5.8	5.8	5.8	5.8	5.8	5.8	5.8	5.8	5.8	5.8	5.8
	21	SHC	3.9	3.9	3.9	3.9	3.9	3.9	3.9	3.9	3.9	3.9	3.9	3.9	3.9	3.9	3.9
	23	SHC	4.5	4.5	4.5	4.5	4.5	4.5	4.5	4.5	4.5	4.5	4.5	4.5	4.5	4.5	4.5
	25	SHC	5.2	5.2	5.2	5.2	5.2	5.2	5.2	5.2	5.2	5.2	5.2	5.2	5.2	5.2	5.2
	27	SHC	5.8	5.8	5.8	5.8	5.8	5.8	5.8	5.8	5.8	5.8	5.8	5.8	5.8	5.8	5.8
	29	SHC	5.8	5.8	5.8	5.8	5.8	5.8	5.8	5.8	5.8	5.8	5.8	5.8	5.8	5.8	5.8
17		TC	6.3	6.3	6.3	6.3	6.3	6.3	6.3	6.3	6.3	6.3	6.3	6.3	6.3	6.3	6.3
	21	SHC	3.7	3.7	3.7	3.7	3.7	3.7	3.7	3.7	3.7	3.7	3.7	3.7	3.7	3.7	3.7
	23	SHC	4.4	4.4	4.4	4.4	4.4	4.4	4.4	4.4	4.4	4.4	4.4	4.4	4.4	4.4	4.4
	25	SHC	5.0	5.0	5.0	5.0	5.0	5.0	5.0	5.0	5.0	5.0	5.0	5.0	5.0	5.0	5.0
	27	SHC	5.6	5.6	5.6	5.6	5.6	5.6	5.6	5.6	5.6	5.6	5.6	5.6	5.6	5.6	5.6
	29	SHC	6.2	6.2	6.2	6.2	6.2	6.2	6.2	6.2	6.2	6.2	6.2	6.2	6.2	6.2	6.2
18		TC	6.8	6.8	6.8	6.8	6.8	6.8	6.8	6.8	6.8	6.8	6.8	6.8	6.8	6.8	6.8
	21	SHC	3.5	3.5	3.5	3.5	3.5	3.5	3.5	3.5	3.5	3.5	3.5	3.5	3.5	3.5	3.5
	23	SHC	4.1	4.1	4.1	4.1	4.1	4.1	4.1	4.1	4.1	4.1	4.1	4.1	4.1	4.1	4.1
	25	SHC	4.8	4.8	4.8	4.8	4.8	4.8	4.8	4.8	4.8	4.8	4.8	4.8	4.8	4.8	4.8
	27	SHC	5.4	5.4	5.4	5.4	5.4	5.4	5.4	5.4	5.4	5.4	5.4	5.4	5.4	5.4	5.4
	29	SHC	6.0	6.0	6.0	6.0	6.0	6.0	6.0	6.0	6.0	6.0	6.0	6.0	6.0	6.0	6.0
	31	SHC	6.6	6.6	6.6	6.6	6.6	6.6	6.6	6.6	6.6	6.6	6.6	6.6	6.6	6.6	6.6
19		TC	7.3	7.3	7.3	7.3	7.3	7.3	7.3	7.3	7.3	7.3	7.3	7.3	7.3	7.3	7.3
	21	SHC	3.3	3.3	3.3	3.3	3.3	3.3	3.3	3.3	3.3	3.3	3.3	3.3	3.3	3.3	3.3
	23	SHC	3.9	3.9	3.9	3.9	3.9	3.9	3.9	3.9	3.9	3.9	3.9	3.9	3.9	3.9	3.9
	25	SHC	4.6	4.6	4.6	4.6	4.6	4.6	4.6	4.6	4.6	4.6	4.6	4.6	4.6	4.6	4.6
	27	SHC	5.2	5.2	5.2	5.2	5.2	5.2	5.2	5.2	5.2	5.2	5.2	5.2	5.2	5.2	5.2
	29	SHC	5.8	5.8	5.8	5.8	5.8	5.8	5.8	5.8	5.8	5.8	5.8	5.8	5.8	5.8	5.8
	31	SHC	6.4	6.4	6.4	6.4	6.4	6.4	6.4	6.4	6.4	6.4	6.4	6.4	6.4	6.4	6.4
20		TC	7.8	7.8	7.8	7.8	7.8	7.8	7.8	7.8	7.8	7.8	7.8	7.8	7.8	7.8	7.6
	23	SHC	3.7	3.7	3.7	3.7	3.7	3.7	3.7	3.7	3.7	3.7	3.7	3.7	3.7	3.7	3.7
	25	SHC	4.3	4.3	4.3	4.3	4.3	4.3	4.3	4.3	4.3	4.3	4.3	4.3	4.3	4.3	4.3
	27	SHC	5.0	5.0	5.0	5.0	5.0	5.0	5.0	5.0	5.0	5.0	5.0	5.0	5.0	4.9	4.9
	29	SHC	5.6	5.6	5.6	5.6	5.6	5.6	5.6	5.6	5.6	5.6	5.6	5.6	5.6	5.6	5.5
	31	SHC	6.2	6.2	6.2	6.2	6.2	6.2	6.2	6.2	6.2	6.2	6.2	6.2	6.2	6.2	6.1
21		TC	8.3	8.3	8.3	8.3	8.3	8.3	8.3	8.3	8.3	8.3	8.3	8.3	8.2	7.9	7.8
	23	SHC	3.5	3.5	3.5	3.5	3.5	3.5	3.5	3.5	3.5	3.5	3.5	3.5	3.4	3.3	3.3
	25	SHC	4.1	4.1	4.1	4.1	4.1	4.1	4.1	4.1	4.1	4.1	4.1	4.1	4.1	4.0	3.9
	27	SHC	4.7	4.7	4.7	4.7	4.7	4.7	4.7	4.7	4.7	4.7	4.7	4.7	4.7	4.6	4.5
	29	SHC	5.3	5.3	5.3	5.3	5.3	5.3	5.3	5.3	5.3	5.3	5.3	5.3	5.3	5.2	5.2
	31	SHC	6.0	6.0	6.0	6.0	6.0	6.0	6.0	6.0	6.0	6.0	6.0	6.0	5.9	5.8	5.8
22		TC	8.8	8.8	8.8	8.8	8.8	8.8	8.8	8.8	8.8	8.8	8.8	8.6	8.3	8.1	8.0
	25	SHC	3.9	3.9	3.9	3.9	3.9	3.9	3.9	3.9	3.9	3.9	3.9	3.8	3.7	3.6	3.5
	27	SHC	4.5	4.5	4.5	4.5	4.5	4.5	4.5	4.5	4.5	4.5	4.5	4.4	4.3	4.2	4.2
	29	SHC	5.1	5.1	5.1	5.1	5.1	5.1	5.1	5.1	5.1	5.1	5.1	5.0	4.9	4.8	4.8
	31	SHC	5.7	5.7	5.7	5.7	5.7	5.7	5.7	5.7	5.7	5.7	5.7	5.7	5.6	5.5	5.4
23		TC	9.2	9.2	9.2	9.2	9.2	9.2	9.2	9.2	9.2	9.2	9.0	8.7	8.5	8.2	8.1
	25	SHC	3.6	3.6	3.6	3.6	3.6	3.6	3.6	3.6	3.6	3.6	3.5	3.4	3.3	3.2	3.2
	27	SHC	4.2	4.2	4.2	4.2	4.2	4.2	4.2	4.2	4.2	4.2	4.1	4.0	3.9	3.8	3.8
	29	SHC	4.9	4.9	4.9	4.9	4.9	4.9	4.9	4.9	4.9	4.9	4.8	4.7	4.6	4.5	4.4
	31	SHC	5.5	5.5	5.5	5.5	5.5	5.5	5.5	5.5	5.5	5.5	5.4	5.3	5.2	5.1	5.1

3. Cooling Capacity of Indoor Unit

• S-106MK1E5

Power supply : 220/230/240V 1phase-50,60Hz TC : Total Cooling Capacity (kW) SHC : Sensible Heat Capacity (kW)

This data is when the indoor unit connects with 16HP outdoor unit.

RATING CAPACITY:		10.6 kW	AIR FLOW RATE:19.0 m³/min														
EVAPORATOR			CONDENSER														
AIR INTAKE. TEMP			AMBIENT TEMP. (°C)														
W.B.	D.B.		15	17	19	21	23	25	27	29	31	33	35	37	39	41	43
14		TC	7.1	7.1	7.1	7.1	7.1	7.1	7.1	7.1	7.1	7.1	7.1	7.1	7.1	7.1	7.1
	21	SHC	5.8	5.8	5.8	5.8	5.8	5.8	5.8	5.8	5.8	5.8	5.8	5.8	5.8	5.8	5.8
	23	SHC	6.6	6.6	6.6	6.6	6.6	6.6	6.6	6.6	6.6	6.6	6.6	6.6	6.6	6.6	6.6
	25	SHC	7.1	7.1	7.1	7.1	7.1	7.1	7.1	7.1	7.1	7.1	7.1	7.1	7.1	7.1	7.1
	27	SHC	7.1	7.1	7.1	7.1	7.1	7.1	7.1	7.1	7.1	7.1	7.1	7.1	7.1	7.1	7.1
15		TC	7.8	7.8	7.8	7.8	7.8	7.8	7.8	7.8	7.8	7.8	7.8	7.8	7.8	7.8	7.8
	21	SHC	5.6	5.6	5.6	5.6	5.6	5.6	5.6	5.6	5.6	5.6	5.6	5.6	5.6	5.6	5.6
	23	SHC	6.4	6.4	6.4	6.4	6.4	6.4	6.4	6.4	6.4	6.4	6.4	6.4	6.4	6.4	6.4
	25	SHC	7.2	7.2	7.2	7.2	7.2	7.2	7.2	7.2	7.2	7.2	7.2	7.2	7.2	7.2	7.2
	27	SHC	7.8	7.8	7.8	7.8	7.8	7.8	7.8	7.8	7.8	7.8	7.8	7.8	7.8	7.8	7.8
16		TC	8.5	8.5	8.5	8.5	8.5	8.5	8.5	8.5	8.5	8.5	8.5	8.5	8.5	8.5	8.5
	21	SHC	5.5	5.5	5.5	5.5	5.5	5.5	5.5	5.5	5.5	5.5	5.5	5.5	5.5	5.5	5.5
	23	SHC	6.2	6.2	6.2	6.2	6.2	6.2	6.2	6.2	6.2	6.2	6.2	6.2	6.2	6.2	6.2
	25	SHC	7.0	7.0	7.0	7.0	7.0	7.0	7.0	7.0	7.0	7.0	7.0	7.0	7.0	7.0	7.0
	27	SHC	7.8	7.8	7.8	7.8	7.8	7.8	7.8	7.8	7.8	7.8	7.8	7.8	7.8	7.8	7.8
	29	SHC	8.5	8.5	8.5	8.5	8.5	8.5	8.5	8.5	8.5	8.5	8.5	8.5	8.5	8.5	8.5
17		TC	9.2	9.2	9.2	9.2	9.2	9.2	9.2	9.2	9.2	9.2	9.2	9.2	9.2	9.2	9.2
	21	SHC	5.3	5.3	5.3	5.3	5.3	5.3	5.3	5.3	5.3	5.3	5.3	5.3	5.3	5.3	5.3
	23	SHC	6.0	6.0	6.0	6.0	6.0	6.0	6.0	6.0	6.0	6.0	6.0	6.0	6.0	6.0	6.0
	25	SHC	6.8	6.8	6.8	6.8	6.8	6.8	6.8	6.8	6.8	6.8	6.8	6.8	6.8	6.8	6.8
	27	SHC	7.6	7.6	7.6	7.6	7.6	7.6	7.6	7.6	7.6	7.6	7.6	7.6	7.6	7.6	7.6
	29	SHC	8.4	8.4	8.4	8.4	8.4	8.4	8.4	8.4	8.4	8.4	8.4	8.4	8.4	8.4	8.4
18		TC	9.9	9.9	9.9	9.9	9.9	9.9	9.9	9.9	9.9	9.9	9.9	9.9	9.9	9.9	9.9
	21	SHC	5.0	5.0	5.0	5.0	5.0	5.0	5.0	5.0	5.0	5.0	5.0	5.0	5.0	5.0	5.0
	23	SHC	5.8	5.8	5.8	5.8	5.8	5.8	5.8	5.8	5.8	5.8	5.8	5.8	5.8	5.8	5.8
	25	SHC	6.6	6.6	6.6	6.6	6.6	6.6	6.6	6.6	6.6	6.6	6.6	6.6	6.6	6.6	6.6
	27	SHC	7.4	7.4	7.4	7.4	7.4	7.4	7.4	7.4	7.4	7.4	7.4	7.4	7.4	7.4	7.4
	29	SHC	8.2	8.2	8.2	8.2	8.2	8.2	8.2	8.2	8.2	8.2	8.2	8.2	8.2	8.2	8.2
	31	SHC	8.9	8.9	8.9	8.9	8.9	8.9	8.9	8.9	8.9	8.9	8.9	8.9	8.9	8.9	8.9
19		TC	10.6	10.6	10.6	10.6	10.6	10.6	10.6	10.6	10.6	10.6	10.6	10.6	10.6	10.6	10.6
	21	SHC	4.8	4.8	4.8	4.8	4.8	4.8	4.8	4.8	4.8	4.8	4.8	4.8	4.8	4.8	4.8
	23	SHC	5.6	5.6	5.6	5.6	5.6	5.6	5.6	5.6	5.6	5.6	5.6	5.6	5.6	5.6	5.6
	25	SHC	6.4	6.4	6.4	6.4	6.4	6.4	6.4	6.4	6.4	6.4	6.4	6.4	6.4	6.4	6.4
	27	SHC	7.1	7.1	7.1	7.1	7.1	7.1	7.1	7.1	7.1	7.1	7.1	7.1	7.1	7.1	7.1
	29	SHC	7.9	7.9	7.9	7.9	7.9	7.9	7.9	7.9	7.9	7.9	7.9	7.9	7.9	7.9	7.9
	31	SHC	8.7	8.7	8.7	8.7	8.7	8.7	8.7	8.7	8.7	8.7	8.7	8.7	8.7	8.7	8.7
20		TC	11.3	11.3	11.3	11.3	11.3	11.3	11.3	11.3	11.3	11.3	11.3	11.3	11.3	11.3	11.1
	23	SHC	5.3	5.3	5.3	5.3	5.3	5.3	5.3	5.3	5.3	5.3	5.3	5.3	5.3	5.3	5.2
	25	SHC	6.1	6.1	6.1	6.1	6.1	6.1	6.1	6.1	6.1	6.1	6.1	6.1	6.1	6.1	6.0
	27	SHC	6.9	6.9	6.9	6.9	6.9	6.9	6.9	6.9	6.9	6.9	6.9	6.9	6.9	6.9	6.8
	29	SHC	7.7	7.7	7.7	7.7	7.7	7.7	7.7	7.7	7.7	7.7	7.7	7.7	7.7	7.7	7.6
	31	SHC	8.5	8.5	8.5	8.5	8.5	8.5	8.5	8.5	8.5	8.5	8.5	8.5	8.5	8.4	8.4
21		TC	12.0	12.0	12.0	12.0	12.0	12.0	12.0	12.0	12.0	12.0	12.0	12.0	11.8	11.5	11.3
	23	SHC	5.1	5.1	5.1	5.1	5.1	5.1	5.1	5.1	5.1	5.1	5.1	5.1	5.0	4.8	4.8
	25	SHC	5.8	5.8	5.8	5.8	5.8	5.8	5.8	5.8	5.8	5.8	5.8	5.8	5.8	5.6	5.5
	27	SHC	6.6	6.6	6.6	6.6	6.6	6.6	6.6	6.6	6.6	6.6	6.6	6.6	6.6	6.4	6.3
	29	SHC	7.4	7.4	7.4	7.4	7.4	7.4	7.4	7.4	7.4	7.4	7.4	7.4	7.3	7.2	7.1
	31	SHC	8.2	8.2	8.2	8.2	8.2	8.2	8.2	8.2	8.2	8.2	8.2	8.2	8.1	8.0	7.9
22		TC	12.7	12.7	12.7	12.7	12.7	12.7	12.7	12.7	12.7	12.7	12.7	12.4	12.1	11.7	11.6
	25	SHC	5.6	5.6	5.6	5.6	5.6	5.6	5.6	5.6	5.6	5.6	5.6	5.4	5.3	5.1	5.1
	27	SHC	6.3	6.3	6.3	6.3	6.3	6.3	6.3	6.3	6.3	6.3	6.3	6.2	6.1	5.9	5.9
	29	SHC	7.1	7.1	7.1	7.1	7.1	7.1	7.1	7.1	7.1	7.1	7.1	7.0	6.9	6.7	6.6
	31	SHC	7.9	7.9	7.9	7.9	7.9	7.9	7.9	7.9	7.9	7.9	7.9	7.8	7.6	7.5	7.4
23		TC	13.4	13.4	13.4	13.4	13.4	13.4	13.4	13.4	13.4	13.4	13.1	12.7	12.3	12.0	11.8
	25	SHC	5.3	5.3	5.3	5.3	5.3	5.3	5.3	5.3	5.3	5.3	5.1	4.9	4.8	4.7	4.6
	27	SHC	6.0	6.0	6.0	6.0	6.0	6.0	6.0	6.0	6.0	6.0	5.9	5.7	5.6	5.4	5.4
	29	SHC	6.8	6.8	6.8	6.8	6.8	6.8	6.8	6.8	6.8	6.8	6.7	6.5	6.4	6.2	6.2
	31	SHC	7.6	7.6	7.6	7.6	7.6	7.6	7.6	7.6	7.6	7.6	7.5	7.3	7.2	7.0	6.9

3. Cooling Capacity of Indoor Unit

3-6. Wall Mounted Type (K2 Type)

- S-22MK2E5

Power supply : 220/230/240V 1phase-50,60Hz TC : Total Cooling Capacity (kW) SHC : Sensible Heat Capacity (kW)
This data is when the indoor unit connects with 16HP outdoor unit.

RATING CAPACITY:		2.2 kW	AIR FLOW RATE: 9.0 m³/min														
EVAPORATOR			CONDENSER														
AIR INTAKE. TEMP			AMBIENT TEMP. (°C)														
W.B.	D.B.		15	17	19	21	23	25	27	29	31	33	35	37	39	41	43
14		TC	1.5	1.5	1.5	1.5	1.5	1.5	1.5	1.5	1.5	1.5	1.5	1.5	1.5	1.5	1.5
	21	SHC	1.4	1.4	1.4	1.4	1.4	1.4	1.4	1.4	1.4	1.4	1.4	1.4	1.4	1.4	1.4
	23	SHC	1.5	1.5	1.5	1.5	1.5	1.5	1.5	1.5	1.5	1.5	1.5	1.5	1.5	1.5	1.5
	25	SHC	1.5	1.5	1.5	1.5	1.5	1.5	1.5	1.5	1.5	1.5	1.5	1.5	1.5	1.5	1.5
	27	SHC	1.5	1.5	1.5	1.5	1.5	1.5	1.5	1.5	1.5	1.5	1.5	1.5	1.5	1.5	1.5
15		TC	1.6	1.6	1.6	1.6	1.6	1.6	1.6	1.6	1.6	1.6	1.6	1.6	1.6	1.6	1.6
	21	SHC	1.3	1.3	1.3	1.3	1.3	1.3	1.3	1.3	1.3	1.3	1.3	1.3	1.3	1.3	1.3
	23	SHC	1.5	1.5	1.5	1.5	1.5	1.5	1.5	1.5	1.5	1.5	1.5	1.5	1.5	1.5	1.5
	25	SHC	1.6	1.6	1.6	1.6	1.6	1.6	1.6	1.6	1.6	1.6	1.6	1.6	1.6	1.6	1.6
	27	SHC	1.6	1.6	1.6	1.6	1.6	1.6	1.6	1.6	1.6	1.6	1.6	1.6	1.6	1.6	1.6
16		TC	1.8	1.8	1.8	1.8	1.8	1.8	1.8	1.8	1.8	1.8	1.8	1.8	1.8	1.8	1.8
	21	SHC	1.3	1.3	1.3	1.3	1.3	1.3	1.3	1.3	1.3	1.3	1.3	1.3	1.3	1.3	1.3
	23	SHC	1.5	1.5	1.5	1.5	1.5	1.5	1.5	1.5	1.5	1.5	1.5	1.5	1.5	1.5	1.5
	25	SHC	1.7	1.7	1.7	1.7	1.7	1.7	1.7	1.7	1.7	1.7	1.7	1.7	1.7	1.7	1.7
	27	SHC	1.8	1.8	1.8	1.8	1.8	1.8	1.8	1.8	1.8	1.8	1.8	1.8	1.8	1.8	1.8
	29	SHC	1.8	1.8	1.8	1.8	1.8	1.8	1.8	1.8	1.8	1.8	1.8	1.8	1.8	1.8	1.8
17		TC	1.9	1.9	1.9	1.9	1.9	1.9	1.9	1.9	1.9	1.9	1.9	1.9	1.9	1.9	1.9
	21	SHC	1.2	1.2	1.2	1.2	1.2	1.2	1.2	1.2	1.2	1.2	1.2	1.2	1.2	1.2	1.2
	23	SHC	1.4	1.4	1.4	1.4	1.4	1.4	1.4	1.4	1.4	1.4	1.4	1.4	1.4	1.4	1.4
	25	SHC	1.6	1.6	1.6	1.6	1.6	1.6	1.6	1.6	1.6	1.6	1.6	1.6	1.6	1.6	1.6
	27	SHC	1.8	1.8	1.8	1.8	1.8	1.8	1.8	1.8	1.8	1.8	1.8	1.8	1.8	1.8	1.8
	29	SHC	1.9	1.9	1.9	1.9	1.9	1.9	1.9	1.9	1.9	1.9	1.9	1.9	1.9	1.9	1.9
18		TC	2.1	2.1	2.1	2.1	2.1	2.1	2.1	2.1	2.1	2.1	2.1	2.1	2.1	2.1	2.1
	21	SHC	1.2	1.2	1.2	1.2	1.2	1.2	1.2	1.2	1.2	1.2	1.2	1.2	1.2	1.2	1.2
	23	SHC	1.4	1.4	1.4	1.4	1.4	1.4	1.4	1.4	1.4	1.4	1.4	1.4	1.4	1.4	1.4
	25	SHC	1.6	1.6	1.6	1.6	1.6	1.6	1.6	1.6	1.6	1.6	1.6	1.6	1.6	1.6	1.6
	27	SHC	1.8	1.8	1.8	1.8	1.8	1.8	1.8	1.8	1.8	1.8	1.8	1.8	1.8	1.8	1.8
	29	SHC	1.9	1.9	1.9	1.9	1.9	1.9	1.9	1.9	1.9	1.9	1.9	1.9	1.9	1.9	1.9
	31	SHC	2.1	2.1	2.1	2.1	2.1	2.1	2.1	2.1	2.1	2.1	2.1	2.1	2.1	2.1	2.1
19		TC	2.2	2.2	2.2	2.2	2.2	2.2	2.2	2.2	2.2	2.2	2.2	2.2	2.2	2.2	2.2
	21	SHC	1.1	1.1	1.1	1.1	1.1	1.1	1.1	1.1	1.1	1.1	1.1	1.1	1.1	1.1	1.1
	23	SHC	1.3	1.3	1.3	1.3	1.3	1.3	1.3	1.3	1.3	1.3	1.3	1.3	1.3	1.3	1.3
	25	SHC	1.5	1.5	1.5	1.5	1.5	1.5	1.5	1.5	1.5	1.5	1.5	1.5	1.5	1.5	1.5
	27	SHC	1.7	1.7	1.7	1.7	1.7	1.7	1.7	1.7	1.7	1.7	1.7	1.7	1.7	1.7	1.7
	29	SHC	1.9	1.9	1.9	1.9	1.9	1.9	1.9	1.9	1.9	1.9	1.9	1.9	1.9	1.9	1.9
	31	SHC	2.1	2.1	2.1	2.1	2.1	2.1	2.1	2.1	2.1	2.1	2.1	2.1	2.1	2.1	2.1
20		TC	2.3	2.3	2.3	2.3	2.3	2.3	2.3	2.3	2.3	2.3	2.3	2.3	2.3	2.3	2.3
	23	SHC	1.3	1.3	1.3	1.3	1.3	1.3	1.3	1.3	1.3	1.3	1.3	1.3	1.3	1.2	1.2
	25	SHC	1.4	1.4	1.4	1.4	1.4	1.4	1.4	1.4	1.4	1.4	1.4	1.4	1.4	1.4	1.4
	27	SHC	1.6	1.6	1.6	1.6	1.6	1.6	1.6	1.6	1.6	1.6	1.6	1.6	1.6	1.6	1.6
	29	SHC	1.8	1.8	1.8	1.8	1.8	1.8	1.8	1.8	1.8	1.8	1.8	1.8	1.8	1.8	1.8
	31	SHC	2.0	2.0	2.0	2.0	2.0	2.0	2.0	2.0	2.0	2.0	2.0	2.0	2.0	2.0	2.0
21		TC	2.5	2.5	2.5	2.5	2.5	2.5	2.5	2.5	2.5	2.5	2.5	2.5	2.5	2.4	2.3
	23	SHC	1.2	1.2	1.2	1.2	1.2	1.2	1.2	1.2	1.2	1.2	1.2	1.2	1.2	1.1	1.1
	25	SHC	1.4	1.4	1.4	1.4	1.4	1.4	1.4	1.4	1.4	1.4	1.4	1.4	1.4	1.3	1.3
	27	SHC	1.6	1.6	1.6	1.6	1.6	1.6	1.6	1.6	1.6	1.6	1.6	1.6	1.6	1.5	1.5
	29	SHC	1.8	1.8	1.8	1.8	1.8	1.8	1.8	1.8	1.8	1.8	1.8	1.8	1.7	1.7	1.7
	31	SHC	1.9	1.9	1.9	1.9	1.9	1.9	1.9	1.9	1.9	1.9	1.9	1.9	1.9	1.9	1.9
22		TC	2.6	2.6	2.6	2.6	2.6	2.6	2.6	2.6	2.6	2.6	2.6	2.6	2.5	2.4	2.4
	25	SHC	1.3	1.3	1.3	1.3	1.3	1.3	1.3	1.3	1.3	1.3	1.3	1.3	1.2	1.2	1.2
	27	SHC	1.5	1.5	1.5	1.5	1.5	1.5	1.5	1.5	1.5	1.5	1.5	1.5	1.4	1.4	1.4
	29	SHC	1.7	1.7	1.7	1.7	1.7	1.7	1.7	1.7	1.7	1.7	1.7	1.7	1.6	1.6	1.6
	31	SHC	1.9	1.9	1.9	1.9	1.9	1.9	1.9	1.9	1.9	1.9	1.9	1.8	1.8	1.8	1.8
23		TC	2.8	2.8	2.8	2.8	2.8	2.8	2.8	2.8	2.8	2.8	2.7	2.6	2.6	2.5	2.4
	25	SHC	1.2	1.2	1.2	1.2	1.2	1.2	1.2	1.2	1.2	1.2	1.2	1.2	1.1	1.1	1.1
	27	SHC	1.4	1.4	1.4	1.4	1.4	1.4	1.4	1.4	1.4	1.4	1.4	1.4	1.3	1.3	1.3
	29	SHC	1.6	1.6	1.6	1.6	1.6	1.6	1.6	1.6	1.6	1.6	1.6	1.5	1.5	1.5	1.5
	31	SHC	1.8	1.8	1.8	1.8	1.8	1.8	1.8	1.8	1.8	1.8	1.8	1.7	1.7	1.7	1.6

3. Cooling Capacity of Indoor Unit

- S-28MK2E5

Power supply : 220/230/240V 1phase-50,60Hz TC : Total Cooling Capacity (kW) SHC : Sensible Heat Capacity (kW)
This data is when the indoor unit connects with 16HP outdoor unit.

RATING CAPACITY:		2.8 kW	AIR FLOW RATE: 9.5 m³/min														
EVAPORATOR			CONDENSER														
AIR INTAKE. TEMP			AMBIENT TEMP. (°C)														
W.B.	D.B.		15	17	19	21	23	25	27	29	31	33	35	37	39	41	43
14		TC	1.9	1.9	1.9	1.9	1.9	1.9	1.9	1.9	1.9	1.9	1.9	1.9	1.9	1.9	1.9
	21	SHC	1.6	1.6	1.6	1.6	1.6	1.6	1.6	1.6	1.6	1.6	1.6	1.6	1.6	1.6	1.6
	23	SHC	1.8	1.8	1.8	1.8	1.8	1.8	1.8	1.8	1.8	1.8	1.8	1.8	1.8	1.8	1.8
	25	SHC	1.9	1.9	1.9	1.9	1.9	1.9	1.9	1.9	1.9	1.9	1.9	1.9	1.9	1.9	1.9
	27	SHC	1.9	1.9	1.9	1.9	1.9	1.9	1.9	1.9	1.9	1.9	1.9	1.9	1.9	1.9	1.9
15		TC	2.1	2.1	2.1	2.1	2.1	2.1	2.1	2.1	2.1	2.1	2.1	2.1	2.1	2.1	2.1
	21	SHC	1.5	1.5	1.5	1.5	1.5	1.5	1.5	1.5	1.5	1.5	1.5	1.5	1.5	1.5	1.5
	23	SHC	1.8	1.8	1.8	1.8	1.8	1.8	1.8	1.8	1.8	1.8	1.8	1.8	1.8	1.8	1.8
	25	SHC	2.0	2.0	2.0	2.0	2.0	2.0	2.0	2.0	2.0	2.0	2.0	2.0	2.0	2.0	2.0
	27	SHC	2.1	2.1	2.1	2.1	2.1	2.1	2.1	2.1	2.1	2.1	2.1	2.1	2.1	2.1	2.1
16		TC	2.2	2.2	2.2	2.2	2.2	2.2	2.2	2.2	2.2	2.2	2.2	2.2	2.2	2.2	2.2
	21	SHC	1.5	1.5	1.5	1.5	1.5	1.5	1.5	1.5	1.5	1.5	1.5	1.5	1.5	1.5	1.5
	23	SHC	1.7	1.7	1.7	1.7	1.7	1.7	1.7	1.7	1.7	1.7	1.7	1.7	1.7	1.7	1.7
	25	SHC	1.9	1.9	1.9	1.9	1.9	1.9	1.9	1.9	1.9	1.9	1.9	1.9	1.9	1.9	1.9
	27	SHC	2.2	2.2	2.2	2.2	2.2	2.2	2.2	2.2	2.2	2.2	2.2	2.2	2.2	2.2	2.2
	29	SHC	2.2	2.2	2.2	2.2	2.2	2.2	2.2	2.2	2.2	2.2	2.2	2.2	2.2	2.2	2.2
17		TC	2.4	2.4	2.4	2.4	2.4	2.4	2.4	2.4	2.4	2.4	2.4	2.4	2.4	2.4	2.4
	21	SHC	1.4	1.4	1.4	1.4	1.4	1.4	1.4	1.4	1.4	1.4	1.4	1.4	1.4	1.4	1.4
	23	SHC	1.6	1.6	1.6	1.6	1.6	1.6	1.6	1.6	1.6	1.6	1.6	1.6	1.6	1.6	1.6
	25	SHC	1.9	1.9	1.9	1.9	1.9	1.9	1.9	1.9	1.9	1.9	1.9	1.9	1.9	1.9	1.9
	27	SHC	2.1	2.1	2.1	2.1	2.1	2.1	2.1	2.1	2.1	2.1	2.1	2.1	2.1	2.1	2.1
	29	SHC	2.3	2.3	2.3	2.3	2.3	2.3	2.3	2.3	2.3	2.3	2.3	2.3	2.3	2.3	2.3
18		TC	2.6	2.6	2.6	2.6	2.6	2.6	2.6	2.6	2.6	2.6	2.6	2.6	2.6	2.6	2.6
	21	SHC	1.3	1.3	1.3	1.3	1.3	1.3	1.3	1.3	1.3	1.3	1.3	1.3	1.3	1.3	1.3
	23	SHC	1.6	1.6	1.6	1.6	1.6	1.6	1.6	1.6	1.6	1.6	1.6	1.6	1.6	1.6	1.6
	25	SHC	1.8	1.8	1.8	1.8	1.8	1.8	1.8	1.8	1.8	1.8	1.8	1.8	1.8	1.8	1.8
	27	SHC	2.0	2.0	2.0	2.0	2.0	2.0	2.0	2.0	2.0	2.0	2.0	2.0	2.0	2.0	2.0
	29	SHC	2.3	2.3	2.3	2.3	2.3	2.3	2.3	2.3	2.3	2.3	2.3	2.3	2.3	2.3	2.3
	31	SHC	2.5	2.5	2.5	2.5	2.5	2.5	2.5	2.5	2.5	2.5	2.5	2.5	2.5	2.5	2.5
19		TC	2.8	2.8	2.8	2.8	2.8	2.8	2.8	2.8	2.8	2.8	2.8	2.8	2.8	2.8	2.8
	21	SHC	1.3	1.3	1.3	1.3	1.3	1.3	1.3	1.3	1.3	1.3	1.3	1.3	1.3	1.3	1.3
	23	SHC	1.5	1.5	1.5	1.5	1.5	1.5	1.5	1.5	1.5	1.5	1.5	1.5	1.5	1.5	1.5
	25	SHC	1.7	1.7	1.7	1.7	1.7	1.7	1.7	1.7	1.7	1.7	1.7	1.7	1.7	1.7	1.7
	27	SHC	2.0	2.0	2.0	2.0	2.0	2.0	2.0	2.0	2.0	2.0	2.0	2.0	2.0	2.0	2.0
	29	SHC	2.2	2.2	2.2	2.2	2.2	2.2	2.2	2.2	2.2	2.2	2.2	2.2	2.2	2.2	2.2
	31	SHC	2.4	2.4	2.4	2.4	2.4	2.4	2.4	2.4	2.4	2.4	2.4	2.4	2.4	2.4	2.4
20		TC	3.0	3.0	3.0	3.0	3.0	3.0	3.0	3.0	3.0	3.0	3.0	3.0	3.0	3.0	2.9
	23	SHC	1.4	1.4	1.4	1.4	1.4	1.4	1.4	1.4	1.4	1.4	1.4	1.4	1.4	1.4	1.4
	25	SHC	1.6	1.6	1.6	1.6	1.6	1.6	1.6	1.6	1.6	1.6	1.6	1.6	1.6	1.6	1.6
	27	SHC	1.9	1.9	1.9	1.9	1.9	1.9	1.9	1.9	1.9	1.9	1.9	1.9	1.9	1.9	1.9
	29	SHC	2.1	2.1	2.1	2.1	2.1	2.1	2.1	2.1	2.1	2.1	2.1	2.1	2.1	2.1	2.1
	31	SHC	2.3	2.3	2.3	2.3	2.3	2.3	2.3	2.3	2.3	2.3	2.3	2.3	2.3	2.3	2.3
21		TC	3.2	3.2	3.2	3.2	3.2	3.2	3.2	3.2	3.2	3.2	3.2	3.2	3.1	3.0	3.0
	23	SHC	1.3	1.3	1.3	1.3	1.3	1.3	1.3	1.3	1.3	1.3	1.3	1.3	1.3	1.3	1.3
	25	SHC	1.6	1.6	1.6	1.6	1.6	1.6	1.6	1.6	1.6	1.6	1.6	1.6	1.5	1.5	1.5
	27	SHC	1.8	1.8	1.8	1.8	1.8	1.8	1.8	1.8	1.8	1.8	1.8	1.8	1.8	1.7	1.7
	29	SHC	2.0	2.0	2.0	2.0	2.0	2.0	2.0	2.0	2.0	2.0	2.0	2.0	2.0	2.0	1.9
	31	SHC	2.2	2.2	2.2	2.2	2.2	2.2	2.2	2.2	2.2	2.2	2.2	2.2	2.2	2.2	2.2
22		TC	3.4	3.4	3.4	3.4	3.4	3.4	3.4	3.4	3.4	3.4	3.4	3.3	3.2	3.1	3.1
	25	SHC	1.5	1.5	1.5	1.5	1.5	1.5	1.5	1.5	1.5	1.5	1.5	1.4	1.4	1.4	1.4
	27	SHC	1.7	1.7	1.7	1.7	1.7	1.7	1.7	1.7	1.7	1.7	1.7	1.7	1.6	1.6	1.6
	29	SHC	1.9	1.9	1.9	1.9	1.9	1.9	1.9	1.9	1.9	1.9	1.9	1.9	1.9	1.8	1.8
	31	SHC	2.2	2.2	2.2	2.2	2.2	2.2	2.2	2.2	2.2	2.2	2.2	2.1	2.1	2.1	2.0
23		TC	3.5	3.5	3.5	3.5	3.5	3.5	3.5	3.5	3.5	3.5	3.4	3.3	3.3	3.2	3.1
	25	SHC	1.4	1.4	1.4	1.4	1.4	1.4	1.4	1.4	1.4	1.4	1.3	1.3	1.3	1.2	1.2
	27	SHC	1.6	1.6	1.6	1.6	1.6	1.6	1.6	1.6	1.6	1.6	1.6	1.5	1.5	1.5	1.4
	29	SHC	1.8	1.8	1.8	1.8	1.8	1.8	1.8	1.8	1.8	1.8	1.8	1.8	1.7	1.7	1.7
	31	SHC	2.1	2.1	2.1	2.1	2.1	2.1	2.1	2.1	2.1	2.1	2.0	2.0	2.0	1.9	1.9

3. Cooling Capacity of Indoor Unit

- S-36MK2E5

Power supply : 220/230/240V 1phase-50,60Hz TC : Total Cooling Capacity (kW) SHC : Sensible Heat Capacity (kW)

This data is when the indoor unit connects with 16HP outdoor unit.

RATING CAPACITY:		3.6 kW	AIR FLOW RATE: 10.9 m³/min														
EVAPORATOR			CONDENSER														
AIR INTAKE. TEMP			AMBIENT TEMP. (°C)														
W.B.	D.B.		15	17	19	21	23	25	27	29	31	33	35	37	39	41	43
14		TC	2.4	2.4	2.4	2.4	2.4	2.4	2.4	2.4	2.4	2.4	2.4	2.4	2.4	2.4	2.4
	21	SHC	1.9	1.9	1.9	1.9	1.9	1.9	1.9	1.9	1.9	1.9	1.9	1.9	1.9	1.9	1.9
	23	SHC	2.1	2.1	2.1	2.1	2.1	2.1	2.1	2.1	2.1	2.1	2.1	2.1	2.1	2.1	2.1
	25	SHC	2.3	2.3	2.3	2.3	2.3	2.3	2.3	2.3	2.3	2.3	2.3	2.3	2.3	2.3	2.3
	27	SHC	2.4	2.4	2.4	2.4	2.4	2.4	2.4	2.4	2.4	2.4	2.4	2.4	2.4	2.4	2.4
15		TC	2.6	2.6	2.6	2.6	2.6	2.6	2.6	2.6	2.6	2.6	2.6	2.6	2.6	2.6	2.6
	21	SHC	1.8	1.8	1.8	1.8	1.8	1.8	1.8	1.8	1.8	1.8	1.8	1.8	1.8	1.8	1.8
	23	SHC	2.1	2.1	2.1	2.1	2.1	2.1	2.1	2.1	2.1	2.1	2.1	2.1	2.1	2.1	2.1
	25	SHC	2.3	2.3	2.3	2.3	2.3	2.3	2.3	2.3	2.3	2.3	2.3	2.3	2.3	2.3	2.3
	27	SHC	2.5	2.5	2.5	2.5	2.5	2.5	2.5	2.5	2.5	2.5	2.5	2.5	2.5	2.5	2.5
16		TC	2.9	2.9	2.9	2.9	2.9	2.9	2.9	2.9	2.9	2.9	2.9	2.9	2.9	2.9	2.9
	21	SHC	1.8	1.8	1.8	1.8	1.8	1.8	1.8	1.8	1.8	1.8	1.8	1.8	1.8	1.8	1.8
	23	SHC	2.0	2.0	2.0	2.0	2.0	2.0	2.0	2.0	2.0	2.0	2.0	2.0	2.0	2.0	2.0
	25	SHC	2.2	2.2	2.2	2.2	2.2	2.2	2.2	2.2	2.2	2.2	2.2	2.2	2.2	2.2	2.2
	27	SHC	2.4	2.4	2.4	2.4	2.4	2.4	2.4	2.4	2.4	2.4	2.4	2.4	2.4	2.4	2.4
	29	SHC	2.6	2.6	2.6	2.6	2.6	2.6	2.6	2.6	2.6	2.6	2.6	2.6	2.6	2.6	2.6
17		TC	3.1	3.1	3.1	3.1	3.1	3.1	3.1	3.1	3.1	3.1	3.1	3.1	3.1	3.1	3.1
	21	SHC	1.8	1.8	1.8	1.8	1.8	1.8	1.8	1.8	1.8	1.8	1.8	1.8	1.8	1.8	1.8
	23	SHC	2.0	2.0	2.0	2.0	2.0	2.0	2.0	2.0	2.0	2.0	2.0	2.0	2.0	2.0	2.0
	25	SHC	2.2	2.2	2.2	2.2	2.2	2.2	2.2	2.2	2.2	2.2	2.2	2.2	2.2	2.2	2.2
	27	SHC	2.4	2.4	2.4	2.4	2.4	2.4	2.4	2.4	2.4	2.4	2.4	2.4	2.4	2.4	2.4
	29	SHC	2.6	2.6	2.6	2.6	2.6	2.6	2.6	2.6	2.6	2.6	2.6	2.6	2.6	2.6	2.6
18		TC	3.4	3.4	3.4	3.4	3.4	3.4	3.4	3.4	3.4	3.4	3.4	3.4	3.4	3.4	3.4
	21	SHC	1.8	1.8	1.8	1.8	1.8	1.8	1.8	1.8	1.8	1.8	1.8	1.8	1.8	1.8	1.8
	23	SHC	2.0	2.0	2.0	2.0	2.0	2.0	2.0	2.0	2.0	2.0	2.0	2.0	2.0	2.0	2.0
	25	SHC	2.2	2.2	2.2	2.2	2.2	2.2	2.2	2.2	2.2	2.2	2.2	2.2	2.2	2.2	2.2
	27	SHC	2.4	2.4	2.4	2.4	2.4	2.4	2.4	2.4	2.4	2.4	2.4	2.4	2.4	2.4	2.4
	29	SHC	2.6	2.6	2.6	2.6	2.6	2.6	2.6	2.6	2.6	2.6	2.6	2.6	2.6	2.6	2.6
	31	SHC	2.8	2.8	2.8	2.8	2.8	2.8	2.8	2.8	2.8	2.8	2.8	2.8	2.8	2.8	2.8
19		TC	3.6	3.6	3.6	3.6	3.6	3.6	3.6	3.6	3.6	3.6	3.6	3.6	3.6	3.6	3.6
	21	SHC	1.7	1.7	1.7	1.7	1.7	1.7	1.7	1.7	1.7	1.7	1.7	1.7	1.7	1.7	1.7
	23	SHC	1.9	1.9	1.9	1.9	1.9	1.9	1.9	1.9	1.9	1.9	1.9	1.9	1.9	1.9	1.9
	25	SHC	2.1	2.1	2.1	2.1	2.1	2.1	2.1	2.1	2.1	2.1	2.1	2.1	2.1	2.1	2.1
	27	SHC	2.4	2.4	2.4	2.4	2.4	2.4	2.4	2.4	2.4	2.4	2.4	2.4	2.4	2.4	2.4
	29	SHC	2.6	2.6	2.6	2.6	2.6	2.6	2.6	2.6	2.6	2.6	2.6	2.6	2.6	2.6	2.6
	31	SHC	2.8	2.8	2.8	2.8	2.8	2.8	2.8	2.8	2.8	2.8	2.8	2.8	2.8	2.8	2.8
20		TC	3.8	3.8	3.8	3.8	3.8	3.8	3.8	3.8	3.8	3.8	3.8	3.8	3.8	3.8	3.8
	23	SHC	1.9	1.9	1.9	1.9	1.9	1.9	1.9	1.9	1.9	1.9	1.9	1.9	1.9	1.9	1.9
	25	SHC	2.1	2.1	2.1	2.1	2.1	2.1	2.1	2.1	2.1	2.1	2.1	2.1	2.1	2.1	2.1
	27	SHC	2.3	2.3	2.3	2.3	2.3	2.3	2.3	2.3	2.3	2.3	2.3	2.3	2.3	2.3	2.3
	29	SHC	2.5	2.5	2.5	2.5	2.5	2.5	2.5	2.5	2.5	2.5	2.5	2.5	2.5	2.5	2.5
	31	SHC	2.7	2.7	2.7	2.7	2.7	2.7	2.7	2.7	2.7	2.7	2.7	2.7	2.7	2.7	2.7
21		TC	4.1	4.1	4.1	4.1	4.1	4.1	4.1	4.1	4.1	4.1	4.1	4.1	4.0	3.9	3.8
	23	SHC	1.9	1.9	1.9	1.9	1.9	1.9	1.9	1.9	1.9	1.9	1.9	1.9	1.8	1.8	1.7
	25	SHC	2.1	2.1	2.1	2.1	2.1	2.1	2.1	2.1	2.1	2.1	2.1	2.1	2.0	2.0	1.9
	27	SHC	2.3	2.3	2.3	2.3	2.3	2.3	2.3	2.3	2.3	2.3	2.3	2.3	2.2	2.2	2.1
	29	SHC	2.5	2.5	2.5	2.5	2.5	2.5	2.5	2.5	2.5	2.5	2.5	2.5	2.4	2.4	2.3
	31	SHC	2.7	2.7	2.7	2.7	2.7	2.7	2.7	2.7	2.7	2.7	2.7	2.7	2.6	2.6	2.5
22		TC	4.3	4.3	4.3	4.3	4.3	4.3	4.3	4.3	4.3	4.3	4.3	4.2	4.1	4.0	3.9
	25	SHC	2.0	2.0	2.0	2.0	2.0	2.0	2.0	2.0	2.0	2.0	2.0	2.0	1.9	1.8	1.8
	27	SHC	2.2	2.2	2.2	2.2	2.2	2.2	2.2	2.2	2.2	2.2	2.2	2.2	2.1	2.0	2.0
	29	SHC	2.4	2.4	2.4	2.4	2.4	2.4	2.4	2.4	2.4	2.4	2.4	2.4	2.3	2.2	2.2
	31	SHC	2.6	2.6	2.6	2.6	2.6	2.6	2.6	2.6	2.6	2.6	2.6	2.6	2.5	2.4	2.4
23		TC	4.6	4.6	4.6	4.6	4.6	4.6	4.6	4.6	4.6	4.6	4.4	4.3	4.2	4.1	4.0
	25	SHC	1.9	1.9	1.9	1.9	1.9	1.9	1.9	1.9	1.9	1.9	1.9	1.8	1.8	1.7	1.7
	27	SHC	2.1	2.1	2.1	2.1	2.1	2.1	2.1	2.1	2.1	2.1	2.1	2.0	2.0	1.9	1.9
	29	SHC	2.3	2.3	2.3	2.3	2.3	2.3	2.3	2.3	2.3	2.3	2.3	2.2	2.2	2.1	2.1
	31	SHC	2.6	2.6	2.6	2.6	2.6	2.6	2.6	2.6	2.6	2.6	2.5	2.4	2.4	2.3	2.3

3. Cooling Capacity of Indoor Unit

3-7. Ceiling Type (T1 Type)

- S-36MT1E5

Power supply : 220/230/240V 1phase-50,60Hz TC : Total Cooling Capacity (kW) SHC : Sensible Heat Capacity (kW)
This data is when the indoor unit connects with 16HP outdoor unit.

RATING CAPACITY:		3.6 kW AIR FLOW RATE: 12.0 m³/min																
EVAPORATOR		CONDENSER																
AIR INTAKE. TEMP		AMBIENT TEMP. (°C)																
W.B.	D.B.		15	17	19	21	23	25	27	29	31	33	35	37	39	41	43
14		TC	2.4	2.4	2.4	2.4	2.4	2.4	2.4	2.4	2.4	2.4	2.4	2.4	2.4	2.4	2.4
	21	SHC	2.2	2.2	2.2	2.2	2.2	2.2	2.2	2.2	2.2	2.2	2.2	2.2	2.2	2.2	2.2
	23	SHC	2.4	2.4	2.4	2.4	2.4	2.4	2.4	2.4	2.4	2.4	2.4	2.4	2.4	2.4	2.4
	25	SHC	2.4	2.4	2.4	2.4	2.4	2.4	2.4	2.4	2.4	2.4	2.4	2.4	2.4	2.4	2.4
	27	SHC	2.4	2.4	2.4	2.4	2.4	2.4	2.4	2.4	2.4	2.4	2.4	2.4	2.4	2.4	2.4
15		TC	2.6	2.6	2.6	2.6	2.6	2.6	2.6	2.6	2.6	2.6	2.6	2.6	2.6	2.6	2.6
	21	SHC	2.1	2.1	2.1	2.1	2.1	2.1	2.1	2.1	2.1	2.1	2.1	2.1	2.1	2.1	2.1
	23	SHC	2.4	2.4	2.4	2.4	2.4	2.4	2.4	2.4	2.4	2.4	2.4	2.4	2.4	2.4	2.4
	25	SHC	2.6	2.6	2.6	2.6	2.6	2.6	2.6	2.6	2.6	2.6	2.6	2.6	2.6	2.6	2.6
	27	SHC	2.6	2.6	2.6	2.6	2.6	2.6	2.6	2.6	2.6	2.6	2.6	2.6	2.6	2.6	2.6
16		TC	2.9	2.9	2.9	2.9	2.9	2.9	2.9	2.9	2.9	2.9	2.9	2.9	2.9	2.9	2.9
	21	SHC	2.0	2.0	2.0	2.0	2.0	2.0	2.0	2.0	2.0	2.0	2.0	2.0	2.0	2.0	2.0
	23	SHC	2.3	2.3	2.3	2.3	2.3	2.3	2.3	2.3	2.3	2.3	2.3	2.3	2.3	2.3	2.3
	25	SHC	2.6	2.6	2.6	2.6	2.6	2.6	2.6	2.6	2.6	2.6	2.6	2.6	2.6	2.6	2.6
	27	SHC	2.9	2.9	2.9	2.9	2.9	2.9	2.9	2.9	2.9	2.9	2.9	2.9	2.9	2.9	2.9
	29	SHC	2.9	2.9	2.9	2.9	2.9	2.9	2.9	2.9	2.9	2.9	2.9	2.9	2.9	2.9	2.9
17		TC	3.1	3.1	3.1	3.1	3.1	3.1	3.1	3.1	3.1	3.1	3.1	3.1	3.1	3.1	3.1
	21	SHC	1.9	1.9	1.9	1.9	1.9	1.9	1.9	1.9	1.9	1.9	1.9	1.9	1.9	1.9	1.9
	23	SHC	2.2	2.2	2.2	2.2	2.2	2.2	2.2	2.2	2.2	2.2	2.2	2.2	2.2	2.2	2.2
	25	SHC	2.5	2.5	2.5	2.5	2.5	2.5	2.5	2.5	2.5	2.5	2.5	2.5	2.5	2.5	2.5
	27	SHC	2.8	2.8	2.8	2.8	2.8	2.8	2.8	2.8	2.8	2.8	2.8	2.8	2.8	2.8	2.8
	29	SHC	3.1	3.1	3.1	3.1	3.1	3.1	3.1	3.1	3.1	3.1	3.1	3.1	3.1	3.1	3.1
18		TC	3.4	3.4	3.4	3.4	3.4	3.4	3.4	3.4	3.4	3.4	3.4	3.4	3.4	3.4	3.4
	21	SHC	1.8	1.8	1.8	1.8	1.8	1.8	1.8	1.8	1.8	1.8	1.8	1.8	1.8	1.8	1.8
	23	SHC	2.1	2.1	2.1	2.1	2.1	2.1	2.1	2.1	2.1	2.1	2.1	2.1	2.1	2.1	2.1
	25	SHC	2.4	2.4	2.4	2.4	2.4	2.4	2.4	2.4	2.4	2.4	2.4	2.4	2.4	2.4	2.4
	27	SHC	2.7	2.7	2.7	2.7	2.7	2.7	2.7	2.7	2.7	2.7	2.7	2.7	2.7	2.7	2.7
	29	SHC	3.1	3.1	3.1	3.1	3.1	3.1	3.1	3.1	3.1	3.1	3.1	3.1	3.1	3.1	3.1
	31	SHC	3.4	3.4	3.4	3.4	3.4	3.4	3.4	3.4	3.4	3.4	3.4	3.4	3.4	3.4	3.4
19		TC	3.6	3.6	3.6	3.6	3.6	3.6	3.6	3.6	3.6	3.6	3.6	3.6	3.6	3.6	3.6
	21	SHC	1.6	1.6	1.6	1.6	1.6	1.6	1.6	1.6	1.6	1.6	1.6	1.6	1.6	1.6	1.6
	23	SHC	2.0	2.0	2.0	2.0	2.0	2.0	2.0	2.0	2.0	2.0	2.0	2.0	2.0	2.0	2.0
	25	SHC	2.3	2.3	2.3	2.3	2.3	2.3	2.3	2.3	2.3	2.3	2.3	2.3	2.3	2.3	2.3
	27	SHC	2.6	2.6	2.6	2.6	2.6	2.6	2.6	2.6	2.6	2.6	2.6	2.6	2.6	2.6	2.6
	29	SHC	2.9	2.9	2.9	2.9	2.9	2.9	2.9	2.9	2.9	2.9	2.9	2.9	2.9	2.9	2.9
	31	SHC	3.3	3.3	3.3	3.3	3.3	3.3	3.3	3.3	3.3	3.3	3.3	3.3	3.3	3.3	3.3
20		TC	3.8	3.8	3.8	3.8	3.8	3.8	3.8	3.8	3.8	3.8	3.8	3.8	3.8	3.8	3.8
	23	SHC	1.9	1.9	1.9	1.9	1.9	1.9	1.9	1.9	1.9	1.9	1.9	1.9	1.9	1.8	1.8
	25	SHC	2.2	2.2	2.2	2.2	2.2	2.2	2.2	2.2	2.2	2.2	2.2	2.2	2.2	2.2	2.1
	27	SHC	2.5	2.5	2.5	2.5	2.5	2.5	2.5	2.5	2.5	2.5	2.5	2.5	2.5	2.5	2.5
	29	SHC	2.8	2.8	2.8	2.8	2.8	2.8	2.8	2.8	2.8	2.8	2.8	2.8	2.8	2.8	2.8
	31	SHC	3.2	3.2	3.2	3.2	3.2	3.2	3.2	3.2	3.2	3.2	3.2	3.2	3.2	3.1	3.1
21		TC	4.1	4.1	4.1	4.1	4.1	4.1	4.1	4.1	4.1	4.1	4.1	4.1	4.0	3.9	3.8
	23	SHC	1.7	1.7	1.7	1.7	1.7	1.7	1.7	1.7	1.7	1.7	1.7	1.7	1.7	1.7	1.6
	25	SHC	2.0	2.0	2.0	2.0	2.0	2.0	2.0	2.0	2.0	2.0	2.0	2.0	2.0	2.0	2.0
	27	SHC	2.4	2.4	2.4	2.4	2.4	2.4	2.4	2.4	2.4	2.4	2.4	2.4	2.3	2.3	2.3
	29	SHC	2.7	2.7	2.7	2.7	2.7	2.7	2.7	2.7	2.7	2.7	2.7	2.7	2.7	2.6	2.6
	31	SHC	3.0	3.0	3.0	3.0	3.0	3.0	3.0	3.0	3.0	3.0	3.0	3.0	3.0	3.0	2.9
22		TC	4.3	4.3	4.3	4.3	4.3	4.3	4.3	4.3	4.3	4.3	4.3	4.2	4.1	4.0	3.9
	25	SHC	1.9	1.9	1.9	1.9	1.9	1.9	1.9	1.9	1.9	1.9	1.9	1.9	1.8	1.8	1.8
	27	SHC	2.2	2.2	2.2	2.2	2.2	2.2	2.2	2.2	2.2	2.2	2.2	2.2	2.2	2.1	2.1
	29	SHC	2.6	2.6	2.6	2.6	2.6	2.6	2.6	2.6	2.6	2.6	2.6	2.5	2.5	2.4	2.4
	31	SHC	2.9	2.9	2.9	2.9	2.9	2.9	2.9	2.9	2.9	2.9	2.9	2.9	2.8	2.8	2.7
23		TC	4.6	4.6	4.6	4.6	4.6	4.6	4.6	4.6	4.6	4.6	4.4	4.3	4.2	4.1	4.0
	25	SHC	1.8	1.8	1.8	1.8	1.8	1.8	1.8	1.8	1.8	1.8	1.7	1.7	1.6	1.6	1.6
	27	SHC	2.1	2.1	2.1	2.1	2.1	2.1	2.1	2.1	2.1	2.1	2.1	2.0	2.0	1.9	1.9
	29	SHC	2.4	2.4	2.4	2.4	2.4	2.4	2.4	2.4	2.4	2.4	2.4	2.3	2.3	2.3	2.2
	31	SHC	2.8	2.8	2.8	2.8	2.8	2.8	2.8	2.8	2.8	2.8	2.7	2.7	2.6	2.6	2.6

3. Cooling Capacity of Indoor Unit

- S-45MT1E5

Power supply : 220/230/240V 1phase-50,60Hz TC : Total Cooling Capacity (kW) SHC : Sensible Heat Capacity (kW)
This data is when the indoor unit connects with 16HP outdoor unit.

RATING CAPACITY:		4.5 kW	AIR FLOW RATE: 13.0 m³/min														
EVAPORATOR			CONDENSER														
AIR INTAKE. TEMP			AMBIENT TEMP. (°C)														
W.B.	D.B.		15	17	19	21	23	25	27	29	31	33	35	37	39	41	43
14		TC	3.0	3.0	3.0	3.0	3.0	3.0	3.0	3.0	3.0	3.0	3.0	3.0	3.0	3.0	3.0
	21	SHC	2.9	2.9	2.9	2.9	2.9	2.9	2.9	2.9	2.9	2.9	2.9	2.9	2.9	2.9	2.9
	23	SHC	3.0	3.0	3.0	3.0	3.0	3.0	3.0	3.0	3.0	3.0	3.0	3.0	3.0	3.0	3.0
	25	SHC	3.0	3.0	3.0	3.0	3.0	3.0	3.0	3.0	3.0	3.0	3.0	3.0	3.0	3.0	3.0
	27	SHC	3.0	3.0	3.0	3.0	3.0	3.0	3.0	3.0	3.0	3.0	3.0	3.0	3.0	3.0	3.0
15		TC	3.3	3.3	3.3	3.3	3.3	3.3	3.3	3.3	3.3	3.3	3.3	3.3	3.3	3.3	3.3
	21	SHC	2.8	2.8	2.8	2.8	2.8	2.8	2.8	2.8	2.8	2.8	2.8	2.8	2.8	2.8	2.8
	23	SHC	3.2	3.2	3.2	3.2	3.2	3.2	3.2	3.2	3.2	3.2	3.2	3.2	3.2	3.2	3.2
	25	SHC	3.3	3.3	3.3	3.3	3.3	3.3	3.3	3.3	3.3	3.3	3.3	3.3	3.3	3.3	3.3
	27	SHC	3.3	3.3	3.3	3.3	3.3	3.3	3.3	3.3	3.3	3.3	3.3	3.3	3.3	3.3	3.3
16		TC	3.6	3.6	3.6	3.6	3.6	3.6	3.6	3.6	3.6	3.6	3.6	3.6	3.6	3.6	3.6
	21	SHC	2.6	2.6	2.6	2.6	2.6	2.6	2.6	2.6	2.6	2.6	2.6	2.6	2.6	2.6	2.6
	23	SHC	3.1	3.1	3.1	3.1	3.1	3.1	3.1	3.1	3.1	3.1	3.1	3.1	3.1	3.1	3.1
	25	SHC	3.6	3.6	3.6	3.6	3.6	3.6	3.6	3.6	3.6	3.6	3.6	3.6	3.6	3.6	3.6
	27	SHC	3.6	3.6	3.6	3.6	3.6	3.6	3.6	3.6	3.6	3.6	3.6	3.6	3.6	3.6	3.6
	29	SHC	3.6	3.6	3.6	3.6	3.6	3.6	3.6	3.6	3.6	3.6	3.6	3.6	3.6	3.6	3.6
17		TC	3.9	3.9	3.9	3.9	3.9	3.9	3.9	3.9	3.9	3.9	3.9	3.9	3.9	3.9	3.9
	21	SHC	2.5	2.5	2.5	2.5	2.5	2.5	2.5	2.5	2.5	2.5	2.5	2.5	2.5	2.5	2.5
	23	SHC	2.9	2.9	2.9	2.9	2.9	2.9	2.9	2.9	2.9	2.9	2.9	2.9	2.9	2.9	2.9
	25	SHC	3.4	3.4	3.4	3.4	3.4	3.4	3.4	3.4	3.4	3.4	3.4	3.4	3.4	3.4	3.4
	27	SHC	3.9	3.9	3.9	3.9	3.9	3.9	3.9	3.9	3.9	3.9	3.9	3.9	3.9	3.9	3.9
	29	SHC	3.9	3.9	3.9	3.9	3.9	3.9	3.9	3.9	3.9	3.9	3.9	3.9	3.9	3.9	3.9
18		TC	4.2	4.2	4.2	4.2	4.2	4.2	4.2	4.2	4.2	4.2	4.2	4.2	4.2	4.2	4.2
	21	SHC	2.3	2.3	2.3	2.3	2.3	2.3	2.3	2.3	2.3	2.3	2.3	2.3	2.3	2.3	2.3
	23	SHC	2.8	2.8	2.8	2.8	2.8	2.8	2.8	2.8	2.8	2.8	2.8	2.8	2.8	2.8	2.8
	25	SHC	3.2	3.2	3.2	3.2	3.2	3.2	3.2	3.2	3.2	3.2	3.2	3.2	3.2	3.2	3.2
	27	SHC	3.7	3.7	3.7	3.7	3.7	3.7	3.7	3.7	3.7	3.7	3.7	3.7	3.7	3.7	3.7
	29	SHC	4.2	4.2	4.2	4.2	4.2	4.2	4.2	4.2	4.2	4.2	4.2	4.2	4.2	4.2	4.2
	31	SHC	4.2	4.2	4.2	4.2	4.2	4.2	4.2	4.2	4.2	4.2	4.2	4.2	4.2	4.2	4.2
19		TC	4.5	4.5	4.5	4.5	4.5	4.5	4.5	4.5	4.5	4.5	4.5	4.5	4.5	4.5	4.5
	21	SHC	2.1	2.1	2.1	2.1	2.1	2.1	2.1	2.1	2.1	2.1	2.1	2.1	2.1	2.1	2.1
	23	SHC	2.6	2.6	2.6	2.6	2.6	2.6	2.6	2.6	2.6	2.6	2.6	2.6	2.6	2.6	2.6
	25	SHC	3.1	3.1	3.1	3.1	3.1	3.1	3.1	3.1	3.1	3.1	3.1	3.1	3.1	3.1	3.1
	27	SHC	3.5	3.5	3.5	3.5	3.5	3.5	3.5	3.5	3.5	3.5	3.5	3.5	3.5	3.5	3.5
	29	SHC	4.0	4.0	4.0	4.0	4.0	4.0	4.0	4.0	4.0	4.0	4.0	4.0	4.0	4.0	4.0
	31	SHC	4.5	4.5	4.5	4.5	4.5	4.5	4.5	4.5	4.5	4.5	4.5	4.5	4.5	4.5	4.5
20		TC	4.8	4.8	4.8	4.8	4.8	4.8	4.8	4.8	4.8	4.8	4.8	4.8	4.8	4.8	4.7
	23	SHC	2.4	2.4	2.4	2.4	2.4	2.4	2.4	2.4	2.4	2.4	2.4	2.4	2.4	2.4	2.3
	25	SHC	2.9	2.9	2.9	2.9	2.9	2.9	2.9	2.9	2.9	2.9	2.9	2.9	2.9	2.9	2.8
	27	SHC	3.3	3.3	3.3	3.3	3.3	3.3	3.3	3.3	3.3	3.3	3.3	3.3	3.3	3.3	3.3
	29	SHC	3.8	3.8	3.8	3.8	3.8	3.8	3.8	3.8	3.8	3.8	3.8	3.8	3.8	3.8	3.8
	31	SHC	4.3	4.3	4.3	4.3	4.3	4.3	4.3	4.3	4.3	4.3	4.3	4.3	4.3	4.3	4.3
21		TC	5.1	5.1	5.1	5.1	5.1	5.1	5.1	5.1	5.1	5.1	5.1	5.1	5.0	4.9	4.8
	23	SHC	2.2	2.2	2.2	2.2	2.2	2.2	2.2	2.2	2.2	2.2	2.2	2.2	2.2	2.1	2.1
	25	SHC	2.7	2.7	2.7	2.7	2.7	2.7	2.7	2.7	2.7	2.7	2.7	2.7	2.6	2.6	2.6
	27	SHC	3.1	3.1	3.1	3.1	3.1	3.1	3.1	3.1	3.1	3.1	3.1	3.1	3.1	3.1	3.0
	29	SHC	3.6	3.6	3.6	3.6	3.6	3.6	3.6	3.6	3.6	3.6	3.6	3.6	3.6	3.5	3.5
	31	SHC	4.1	4.1	4.1	4.1	4.1	4.1	4.1	4.1	4.1	4.1	4.1	4.1	4.1	4.0	4.0
22		TC	5.4	5.4	5.4	5.4	5.4	5.4	5.4	5.4	5.4	5.4	5.4	5.3	5.1	5.0	4.9
	25	SHC	2.5	2.5	2.5	2.5	2.5	2.5	2.5	2.5	2.5	2.5	2.5	2.4	2.4	2.3	2.3
	27	SHC	2.9	2.9	2.9	2.9	2.9	2.9	2.9	2.9	2.9	2.9	2.9	2.9	2.8	2.8	2.8
	29	SHC	3.4	3.4	3.4	3.4	3.4	3.4	3.4	3.4	3.4	3.4	3.4	3.4	3.3	3.3	3.3
	31	SHC	3.9	3.9	3.9	3.9	3.9	3.9	3.9	3.9	3.9	3.9	3.9	3.9	3.8	3.7	3.7
23		TC	5.7	5.7	5.7	5.7	5.7	5.7	5.7	5.7	5.7	5.7	5.5	5.4	5.2	5.1	5.0
	25	SHC	2.3	2.3	2.3	2.3	2.3	2.3	2.3	2.3	2.3	2.3	2.2	2.1	2.1	2.0	2.0
	27	SHC	2.7	2.7	2.7	2.7	2.7	2.7	2.7	2.7	2.7	2.7	2.7	2.6	2.6	2.5	2.5
	29	SHC	3.2	3.2	3.2	3.2	3.2	3.2	3.2	3.2	3.2	3.2	3.2	3.1	3.0	3.0	3.0
	31	SHC	3.7	3.7	3.7	3.7	3.7	3.7	3.7	3.7	3.7	3.7	3.6	3.6	3.5	3.5	3.5

3. Cooling Capacity of Indoor Unit

● S-56MT1E5

Power supply : 220/230/240V 1phase-50,60Hz TC : Total Cooling Capacity (kW) SHC : Sensible Heat Capacity (kW)

This data is when the indoor unit connects with 16HP outdoor unit.

RATING CAPACITY:		5.6 kW	AIR FLOW RATE: 13.0 m³/min														
EVAPORATOR			CONDENSER														
AIR INTAKE. TEMP			AMBIENT TEMP. (°C)														
W.B.	D.B.		15	17	19	21	23	25	27	29	31	33	35	37	39	41	43
14		TC	3.7	3.7	3.7	3.7	3.7	3.7	3.7	3.7	3.7	3.7	3.7	3.7	3.7	3.7	3.7
	21	SHC	3.4	3.4	3.4	3.4	3.4	3.4	3.4	3.4	3.4	3.4	3.4	3.4	3.4	3.4	3.4
	23	SHC	3.7	3.7	3.7	3.7	3.7	3.7	3.7	3.7	3.7	3.7	3.7	3.7	3.7	3.7	3.7
	25	SHC	3.7	3.7	3.7	3.7	3.7	3.7	3.7	3.7	3.7	3.7	3.7	3.7	3.7	3.7	3.7
	27	SHC	3.7	3.7	3.7	3.7	3.7	3.7	3.7	3.7	3.7	3.7	3.7	3.7	3.7	3.7	3.7
15		TC	4.1	4.1	4.1	4.1	4.1	4.1	4.1	4.1	4.1	4.1	4.1	4.1	4.1	4.1	4.1
	21	SHC	3.3	3.3	3.3	3.3	3.3	3.3	3.3	3.3	3.3	3.3	3.3	3.3	3.3	3.3	3.3
	23	SHC	3.8	3.8	3.8	3.8	3.8	3.8	3.8	3.8	3.8	3.8	3.8	3.8	3.8	3.8	3.8
	25	SHC	4.1	4.1	4.1	4.1	4.1	4.1	4.1	4.1	4.1	4.1	4.1	4.1	4.1	4.1	4.1
	27	SHC	4.1	4.1	4.1	4.1	4.1	4.1	4.1	4.1	4.1	4.1	4.1	4.1	4.1	4.1	4.1
16		TC	4.5	4.5	4.5	4.5	4.5	4.5	4.5	4.5	4.5	4.5	4.5	4.5	4.5	4.5	4.5
	21	SHC	3.1	3.1	3.1	3.1	3.1	3.1	3.1	3.1	3.1	3.1	3.1	3.1	3.1	3.1	3.1
	23	SHC	3.6	3.6	3.6	3.6	3.6	3.6	3.6	3.6	3.6	3.6	3.6	3.6	3.6	3.6	3.6
	25	SHC	4.2	4.2	4.2	4.2	4.2	4.2	4.2	4.2	4.2	4.2	4.2	4.2	4.2	4.2	4.2
	27	SHC	4.5	4.5	4.5	4.5	4.5	4.5	4.5	4.5	4.5	4.5	4.5	4.5	4.5	4.5	4.5
	29	SHC	4.5	4.5	4.5	4.5	4.5	4.5	4.5	4.5	4.5	4.5	4.5	4.5	4.5	4.5	4.5
17		TC	4.9	4.9	4.9	4.9	4.9	4.9	4.9	4.9	4.9	4.9	4.9	4.9	4.9	4.9	4.9
	21	SHC	2.9	2.9	2.9	2.9	2.9	2.9	2.9	2.9	2.9	2.9	2.9	2.9	2.9	2.9	2.9
	23	SHC	3.5	3.5	3.5	3.5	3.5	3.5	3.5	3.5	3.5	3.5	3.5	3.5	3.5	3.5	3.5
	25	SHC	4.0	4.0	4.0	4.0	4.0	4.0	4.0	4.0	4.0	4.0	4.0	4.0	4.0	4.0	4.0
	27	SHC	4.5	4.5	4.5	4.5	4.5	4.5	4.5	4.5	4.5	4.5	4.5	4.5	4.5	4.5	4.5
	29	SHC	4.9	4.9	4.9	4.9	4.9	4.9	4.9	4.9	4.9	4.9	4.9	4.9	4.9	4.9	4.9
18		TC	5.2	5.2	5.2	5.2	5.2	5.2	5.2	5.2	5.2	5.2	5.2	5.2	5.2	5.2	5.2
	21	SHC	2.8	2.8	2.8	2.8	2.8	2.8	2.8	2.8	2.8	2.8	2.8	2.8	2.8	2.8	2.8
	23	SHC	3.3	3.3	3.3	3.3	3.3	3.3	3.3	3.3	3.3	3.3	3.3	3.3	3.3	3.3	3.3
	25	SHC	3.8	3.8	3.8	3.8	3.8	3.8	3.8	3.8	3.8	3.8	3.8	3.8	3.8	3.8	3.8
	27	SHC	4.3	4.3	4.3	4.3	4.3	4.3	4.3	4.3	4.3	4.3	4.3	4.3	4.3	4.3	4.3
	29	SHC	4.9	4.9	4.9	4.9	4.9	4.9	4.9	4.9	4.9	4.9	4.9	4.9	4.9	4.9	4.9
	31	SHC	5.2	5.2	5.2	5.2	5.2	5.2	5.2	5.2	5.2	5.2	5.2	5.2	5.2	5.2	5.2
19		TC	5.6	5.6	5.6	5.6	5.6	5.6	5.6	5.6	5.6	5.6	5.6	5.6	5.6	5.6	5.6
	21	SHC	2.6	2.6	2.6	2.6	2.6	2.6	2.6	2.6	2.6	2.6	2.6	2.6	2.6	2.6	2.6
	23	SHC	3.1	3.1	3.1	3.1	3.1	3.1	3.1	3.1	3.1	3.1	3.1	3.1	3.1	3.1	3.1
	25	SHC	3.6	3.6	3.6	3.6	3.6	3.6	3.6	3.6	3.6	3.6	3.6	3.6	3.6	3.6	3.6
	27	SHC	4.1	4.1	4.1	4.1	4.1	4.1	4.1	4.1	4.1	4.1	4.1	4.1	4.1	4.1	4.1
	29	SHC	4.7	4.7	4.7	4.7	4.7	4.7	4.7	4.7	4.7	4.7	4.7	4.7	4.7	4.7	4.7
	31	SHC	5.2	5.2	5.2	5.2	5.2	5.2	5.2	5.2	5.2	5.2	5.2	5.2	5.2	5.2	5.2
20		TC	6.0	6.0	6.0	6.0	6.0	6.0	6.0	6.0	6.0	6.0	6.0	6.0	6.0	5.9	5.9
	23	SHC	2.9	2.9	2.9	2.9	2.9	2.9	2.9	2.9	2.9	2.9	2.9	2.9	2.9	2.9	2.8
	25	SHC	3.4	3.4	3.4	3.4	3.4	3.4	3.4	3.4	3.4	3.4	3.4	3.4	3.4	3.4	3.4
	27	SHC	3.9	3.9	3.9	3.9	3.9	3.9	3.9	3.9	3.9	3.9	3.9	3.9	3.9	3.9	3.9
	29	SHC	4.5	4.5	4.5	4.5	4.5	4.5	4.5	4.5	4.5	4.5	4.5	4.5	4.5	4.5	4.4
	31	SHC	5.0	5.0	5.0	5.0	5.0	5.0	5.0	5.0	5.0	5.0	5.0	5.0	5.0	5.0	5.0
21		TC	6.3	6.3	6.3	6.3	6.3	6.3	6.3	6.3	6.3	6.3	6.3	6.3	6.3	6.1	6.0
	23	SHC	2.7	2.7	2.7	2.7	2.7	2.7	2.7	2.7	2.7	2.7	2.7	2.7	2.6	2.6	2.5
	25	SHC	3.2	3.2	3.2	3.2	3.2	3.2	3.2	3.2	3.2	3.2	3.2	3.2	3.2	3.1	3.1
	27	SHC	3.7	3.7	3.7	3.7	3.7	3.7	3.7	3.7	3.7	3.7	3.7	3.7	3.7	3.6	3.6
	29	SHC	4.3	4.3	4.3	4.3	4.3	4.3	4.3	4.3	4.3	4.3	4.3	4.3	4.2	4.2	4.1
	31	SHC	4.8	4.8	4.8	4.8	4.8	4.8	4.8	4.8	4.8	4.8	4.8	4.8	4.8	4.7	4.7
22		TC	6.7	6.7	6.7	6.7	6.7	6.7	6.7	6.7	6.7	6.7	6.7	6.6	6.4	6.2	6.1
	25	SHC	3.0	3.0	3.0	3.0	3.0	3.0	3.0	3.0	3.0	3.0	3.0	2.9	2.9	2.8	2.8
	27	SHC	3.5	3.5	3.5	3.5	3.5	3.5	3.5	3.5	3.5	3.5	3.5	3.5	3.4	3.3	3.3
	29	SHC	4.1	4.1	4.1	4.1	4.1	4.1	4.1	4.1	4.1	4.1	4.1	4.0	3.9	3.9	3.8
	31	SHC	4.6	4.6	4.6	4.6	4.6	4.6	4.6	4.6	4.6	4.6	4.6	4.5	4.4	4.4	4.4
23		TC	7.1	7.1	7.1	7.1	7.1	7.1	7.1	7.1	7.1	7.1	6.9	6.7	6.5	6.3	6.2
	25	SHC	2.8	2.8	2.8	2.8	2.8	2.8	2.8	2.8	2.8	2.8	2.7	2.6	2.6	2.5	2.5
	27	SHC	3.3	3.3	3.3	3.3	3.3	3.3	3.3	3.3	3.3	3.3	3.2	3.2	3.1	3.0	3.0
	29	SHC	3.8	3.8	3.8	3.8	3.8	3.8	3.8	3.8	3.8	3.8	3.8	3.7	3.6	3.5	3.5
	31	SHC	4.4	4.4	4.4	4.4	4.4	4.4	4.4	4.4	4.4	4.4	4.3	4.2	4.1	4.1	4.0

3. Cooling Capacity of Indoor Unit

● S-73MT1E5

Power supply :220/230/240V 1phase-50,60Hz TC : Total Cooling Capacity (kW) SHC : Sensible Heat Capacity (kW)

This data is when the indoor unit connects with 16HP outdoor unit.

RATING CAPACITY:		7.3 kW	AIR FLOW RATE: 18.5 m³/min														
EVAPORATOR			CONDENSER														
AIR INTAKE. TEMP			AMBIENT TEMP. (°C)														
W.B.	D.B.		15	17	19	21	23	25	27	29	31	33	35	37	39	41	43
14		TC	4.9	4.9	4.9	4.9	4.9	4.9	4.9	4.9	4.9	4.9	4.9	4.9	4.9	4.9	4.9
	21	SHC	4.3	4.3	4.3	4.3	4.3	4.3	4.3	4.3	4.3	4.3	4.3	4.3	4.3	4.3	4.3
	23	SHC	4.9	4.9	4.9	4.9	4.9	4.9	4.9	4.9	4.9	4.9	4.9	4.9	4.9	4.9	4.9
	25	SHC	4.9	4.9	4.9	4.9	4.9	4.9	4.9	4.9	4.9	4.9	4.9	4.9	4.9	4.9	4.9
	27	SHC	4.9	4.9	4.9	4.9	4.9	4.9	4.9	4.9	4.9	4.9	4.9	4.9	4.9	4.9	4.9
15		TC	5.4	5.4	5.4	5.4	5.4	5.4	5.4	5.4	5.4	5.4	5.4	5.4	5.4	5.4	5.4
	21	SHC	4.1	4.1	4.1	4.1	4.1	4.1	4.1	4.1	4.1	4.1	4.1	4.1	4.1	4.1	4.1
	23	SHC	4.7	4.7	4.7	4.7	4.7	4.7	4.7	4.7	4.7	4.7	4.7	4.7	4.7	4.7	4.7
	25	SHC	5.3	5.3	5.3	5.3	5.3	5.3	5.3	5.3	5.3	5.3	5.3	5.3	5.3	5.3	5.3
	27	SHC	5.4	5.4	5.4	5.4	5.4	5.4	5.4	5.4	5.4	5.4	5.4	5.4	5.4	5.4	5.4
16		TC	5.8	5.8	5.8	5.8	5.8	5.8	5.8	5.8	5.8	5.8	5.8	5.8	5.8	5.8	5.8
	21	SHC	3.9	3.9	3.9	3.9	3.9	3.9	3.9	3.9	3.9	3.9	3.9	3.9	3.9	3.9	3.9
	23	SHC	4.5	4.5	4.5	4.5	4.5	4.5	4.5	4.5	4.5	4.5	4.5	4.5	4.5	4.5	4.5
	25	SHC	5.2	5.2	5.2	5.2	5.2	5.2	5.2	5.2	5.2	5.2	5.2	5.2	5.2	5.2	5.2
	27	SHC	5.8	5.8	5.8	5.8	5.8	5.8	5.8	5.8	5.8	5.8	5.8	5.8	5.8	5.8	5.8
	29	SHC	5.8	5.8	5.8	5.8	5.8	5.8	5.8	5.8	5.8	5.8	5.8	5.8	5.8	5.8	5.8
17		TC	6.3	6.3	6.3	6.3	6.3	6.3	6.3	6.3	6.3	6.3	6.3	6.3	6.3	6.3	6.3
	21	SHC	3.7	3.7	3.7	3.7	3.7	3.7	3.7	3.7	3.7	3.7	3.7	3.7	3.7	3.7	3.7
	23	SHC	4.4	4.4	4.4	4.4	4.4	4.4	4.4	4.4	4.4	4.4	4.4	4.4	4.4	4.4	4.4
	25	SHC	5.0	5.0	5.0	5.0	5.0	5.0	5.0	5.0	5.0	5.0	5.0	5.0	5.0	5.0	5.0
	27	SHC	5.6	5.6	5.6	5.6	5.6	5.6	5.6	5.6	5.6	5.6	5.6	5.6	5.6	5.6	5.6
	29	SHC	6.2	6.2	6.2	6.2	6.2	6.2	6.2	6.2	6.2	6.2	6.2	6.2	6.2	6.2	6.2
18		TC	6.8	6.8	6.8	6.8	6.8	6.8	6.8	6.8	6.8	6.8	6.8	6.8	6.8	6.8	6.8
	21	SHC	3.5	3.5	3.5	3.5	3.5	3.5	3.5	3.5	3.5	3.5	3.5	3.5	3.5	3.5	3.5
	23	SHC	4.2	4.2	4.2	4.2	4.2	4.2	4.2	4.2	4.2	4.2	4.2	4.2	4.2	4.2	4.2
	25	SHC	4.8	4.8	4.8	4.8	4.8	4.8	4.8	4.8	4.8	4.8	4.8	4.8	4.8	4.8	4.8
	27	SHC	5.4	5.4	5.4	5.4	5.4	5.4	5.4	5.4	5.4	5.4	5.4	5.4	5.4	5.4	5.4
	29	SHC	6.0	6.0	6.0	6.0	6.0	6.0	6.0	6.0	6.0	6.0	6.0	6.0	6.0	6.0	6.0
	31	SHC	6.6	6.6	6.6	6.6	6.6	6.6	6.6	6.6	6.6	6.6	6.6	6.6	6.6	6.6	6.6
19		TC	7.3	7.3	7.3	7.3	7.3	7.3	7.3	7.3	7.3	7.3	7.3	7.3	7.3	7.3	7.3
	21	SHC	3.3	3.3	3.3	3.3	3.3	3.3	3.3	3.3	3.3	3.3	3.3	3.3	3.3	3.3	3.3
	23	SHC	3.9	3.9	3.9	3.9	3.9	3.9	3.9	3.9	3.9	3.9	3.9	3.9	3.9	3.9	3.9
	25	SHC	4.6	4.6	4.6	4.6	4.6	4.6	4.6	4.6	4.6	4.6	4.6	4.6	4.6	4.6	4.6
	27	SHC	5.2	5.2	5.2	5.2	5.2	5.2	5.2	5.2	5.2	5.2	5.2	5.2	5.2	5.2	5.2
	29	SHC	5.8	5.8	5.8	5.8	5.8	5.8	5.8	5.8	5.8	5.8	5.8	5.8	5.8	5.8	5.8
	31	SHC	6.4	6.4	6.4	6.4	6.4	6.4	6.4	6.4	6.4	6.4	6.4	6.4	6.4	6.4	6.4
20		TC	7.8	7.8	7.8	7.8	7.8	7.8	7.8	7.8	7.8	7.8	7.8	7.8	7.8	7.8	7.6
	23	SHC	3.7	3.7	3.7	3.7	3.7	3.7	3.7	3.7	3.7	3.7	3.7	3.7	3.7	3.7	3.7
	25	SHC	4.3	4.3	4.3	4.3	4.3	4.3	4.3	4.3	4.3	4.3	4.3	4.3	4.3	4.3	4.3
	27	SHC	5.0	5.0	5.0	5.0	5.0	5.0	5.0	5.0	5.0	5.0	5.0	5.0	5.0	5.0	4.9
	29	SHC	5.6	5.6	5.6	5.6	5.6	5.6	5.6	5.6	5.6	5.6	5.6	5.6	5.6	5.6	5.5
	31	SHC	6.2	6.2	6.2	6.2	6.2	6.2	6.2	6.2	6.2	6.2	6.2	6.2	6.2	6.2	6.2
21		TC	8.3	8.3	8.3	8.3	8.3	8.3	8.3	8.3	8.3	8.3	8.3	8.3	8.2	7.9	7.8
	23	SHC	3.5	3.5	3.5	3.5	3.5	3.5	3.5	3.5	3.5	3.5	3.5	3.5	3.4	3.3	3.3
	25	SHC	4.1	4.1	4.1	4.1	4.1	4.1	4.1	4.1	4.1	4.1	4.1	4.1	4.1	4.0	3.9
	27	SHC	4.7	4.7	4.7	4.7	4.7	4.7	4.7	4.7	4.7	4.7	4.7	4.7	4.7	4.6	4.5
	29	SHC	5.4	5.4	5.4	5.4	5.4	5.4	5.4	5.4	5.4	5.4	5.4	5.4	5.3	5.2	5.2
	31	SHC	6.0	6.0	6.0	6.0	6.0	6.0	6.0	6.0	6.0	6.0	6.0	6.0	5.9	5.8	5.8
22		TC	8.8	8.8	8.8	8.8	8.8	8.8	8.8	8.8	8.8	8.8	8.8	8.6	8.3	8.1	8.0
	25	SHC	3.9	3.9	3.9	3.9	3.9	3.9	3.9	3.9	3.9	3.9	3.9	3.8	3.7	3.6	3.5
	27	SHC	4.5	4.5	4.5	4.5	4.5	4.5	4.5	4.5	4.5	4.5	4.5	4.4	4.3	4.2	4.2
	29	SHC	5.1	5.1	5.1	5.1	5.1	5.1	5.1	5.1	5.1	5.1	5.1	5.0	4.9	4.8	4.8
	31	SHC	5.7	5.7	5.7	5.7	5.7	5.7	5.7	5.7	5.7	5.7	5.7	5.7	5.6	5.5	5.4
23		TC	9.2	9.2	9.2	9.2	9.2	9.2	9.2	9.2	9.2	9.2	9.0	8.7	8.5	8.2	8.1
	25	SHC	3.6	3.6	3.6	3.6	3.6	3.6	3.6	3.6	3.6	3.6	3.5	3.4	3.3	3.2	3.2
	27	SHC	4.2	4.2	4.2	4.2	4.2	4.2	4.2	4.2	4.2	4.2	4.1	4.0	3.9	3.9	3.8
	29	SHC	4.9	4.9	4.9	4.9	4.9	4.9	4.9	4.9	4.9	4.9	4.8	4.7	4.6	4.5	4.4
	31	SHC	5.5	5.5	5.5	5.5	5.5	5.5	5.5	5.5	5.5	5.5	5.4	5.3	5.2	5.1	5.1

3. Cooling Capacity of Indoor Unit

- S-106MT1E5

Power supply : 220/230/240V 1phase-50,60Hz TC : Total Cooling Capacity (kW) SHC : Sensible Heat Capacity (kW)
This data is when the indoor unit connects with 16HP outdoor unit.

RATING CAPACITY:		10.6 kW	AIR FLOW RATE: 27.5 m³/min														
EVAPORATOR			CONDENSER														
AIR INTAKE. TEMP			AMBIENT TEMP. (°C)														
W.B.	D.B.		15	17	19	21	23	25	27	29	31	33	35	37	39	41	43
14		TC	7.1	7.1	7.1	7.1	7.1	7.1	7.1	7.1	7.1	7.1	7.1	7.1	7.1	7.1	7.1
	21	SHC	6.5	6.5	6.5	6.5	6.5	6.5	6.5	6.5	6.5	6.5	6.5	6.5	6.5	6.5	6.5
	23	SHC	7.1	7.1	7.1	7.1	7.1	7.1	7.1	7.1	7.1	7.1	7.1	7.1	7.1	7.1	7.1
	25	SHC	7.1	7.1	7.1	7.1	7.1	7.1	7.1	7.1	7.1	7.1	7.1	7.1	7.1	7.1	7.1
	27	SHC	7.1	7.1	7.1	7.1	7.1	7.1	7.1	7.1	7.1	7.1	7.1	7.1	7.1	7.1	7.1
15		TC	7.8	7.8	7.8	7.8	7.8	7.8	7.8	7.8	7.8	7.8	7.8	7.8	7.8	7.8	7.8
	21	SHC	6.2	6.2	6.2	6.2	6.2	6.2	6.2	6.2	6.2	6.2	6.2	6.2	6.2	6.2	6.2
	23	SHC	7.2	7.2	7.2	7.2	7.2	7.2	7.2	7.2	7.2	7.2	7.2	7.2	7.2	7.2	7.2
	25	SHC	7.8	7.8	7.8	7.8	7.8	7.8	7.8	7.8	7.8	7.8	7.8	7.8	7.8	7.8	7.8
	27	SHC	7.8	7.8	7.8	7.8	7.8	7.8	7.8	7.8	7.8	7.8	7.8	7.8	7.8	7.8	7.8
16		TC	8.5	8.5	8.5	8.5	8.5	8.5	8.5	8.5	8.5	8.5	8.5	8.5	8.5	8.5	8.5
	21	SHC	5.9	5.9	5.9	5.9	5.9	5.9	5.9	5.9	5.9	5.9	5.9	5.9	5.9	5.9	5.9
	23	SHC	6.9	6.9	6.9	6.9	6.9	6.9	6.9	6.9	6.9	6.9	6.9	6.9	6.9	6.9	6.9
	25	SHC	7.9	7.9	7.9	7.9	7.9	7.9	7.9	7.9	7.9	7.9	7.9	7.9	7.9	7.9	7.9
	27	SHC	8.5	8.5	8.5	8.5	8.5	8.5	8.5	8.5	8.5	8.5	8.5	8.5	8.5	8.5	8.5
	29	SHC	8.5	8.5	8.5	8.5	8.5	8.5	8.5	8.5	8.5	8.5	8.5	8.5	8.5	8.5	8.5
17		TC	9.2	9.2	9.2	9.2	9.2	9.2	9.2	9.2	9.2	9.2	9.2	9.2	9.2	9.2	9.2
	21	SHC	5.6	5.6	5.6	5.6	5.6	5.6	5.6	5.6	5.6	5.6	5.6	5.6	5.6	5.6	5.6
	23	SHC	6.6	6.6	6.6	6.6	6.6	6.6	6.6	6.6	6.6	6.6	6.6	6.6	6.6	6.6	6.6
	25	SHC	7.6	7.6	7.6	7.6	7.6	7.6	7.6	7.6	7.6	7.6	7.6	7.6	7.6	7.6	7.6
	27	SHC	8.6	8.6	8.6	8.6	8.6	8.6	8.6	8.6	8.6	8.6	8.6	8.6	8.6	8.6	8.6
	29	SHC	9.2	9.2	9.2	9.2	9.2	9.2	9.2	9.2	9.2	9.2	9.2	9.2	9.2	9.2	9.2
18		TC	9.9	9.9	9.9	9.9	9.9	9.9	9.9	9.9	9.9	9.9	9.9	9.9	9.9	9.9	9.9
	21	SHC	5.2	5.2	5.2	5.2	5.2	5.2	5.2	5.2	5.2	5.2	5.2	5.2	5.2	5.2	5.2
	23	SHC	6.2	6.2	6.2	6.2	6.2	6.2	6.2	6.2	6.2	6.2	6.2	6.2	6.2	6.2	6.2
	25	SHC	7.2	7.2	7.2	7.2	7.2	7.2	7.2	7.2	7.2	7.2	7.2	7.2	7.2	7.2	7.2
	27	SHC	8.2	8.2	8.2	8.2	8.2	8.2	8.2	8.2	8.2	8.2	8.2	8.2	8.2	8.2	8.2
	29	SHC	9.2	9.2	9.2	9.2	9.2	9.2	9.2	9.2	9.2	9.2	9.2	9.2	9.2	9.2	9.2
	31	SHC	9.9	9.9	9.9	9.9	9.9	9.9	9.9	9.9	9.9	9.9	9.9	9.9	9.9	9.9	9.9
19		TC	10.6	10.6	10.6	10.6	10.6	10.6	10.6	10.6	10.6	10.6	10.6	10.6	10.6	10.6	10.6
	21	SHC	4.9	4.9	4.9	4.9	4.9	4.9	4.9	4.9	4.9	4.9	4.9	4.9	4.9	4.9	4.9
	23	SHC	5.9	5.9	5.9	5.9	5.9	5.9	5.9	5.9	5.9	5.9	5.9	5.9	5.9	5.9	5.9
	25	SHC	6.9	6.9	6.9	6.9	6.9	6.9	6.9	6.9	6.9	6.9	6.9	6.9	6.9	6.9	6.9
	27	SHC	7.9	7.9	7.9	7.9	7.9	7.9	7.9	7.9	7.9	7.9	7.9	7.9	7.9	7.9	7.9
	29	SHC	8.9	8.9	8.9	8.9	8.9	8.9	8.9	8.9	8.9	8.9	8.9	8.9	8.9	8.9	8.9
	31	SHC	9.9	9.9	9.9	9.9	9.9	9.9	9.9	9.9	9.9	9.9	9.9	9.9	9.9	9.9	9.9
20		TC	11.3	11.3	11.3	11.3	11.3	11.3	11.3	11.3	11.3	11.3	11.3	11.3	11.3	11.3	11.1
	23	SHC	5.5	5.5	5.5	5.5	5.5	5.5	5.5	5.5	5.5	5.5	5.5	5.5	5.5	5.5	5.4
	25	SHC	6.5	6.5	6.5	6.5	6.5	6.5	6.5	6.5	6.5	6.5	6.5	6.5	6.5	6.5	6.4
	27	SHC	7.5	7.5	7.5	7.5	7.5	7.5	7.5	7.5	7.5	7.5	7.5	7.5	7.5	7.5	7.4
	29	SHC	8.5	8.5	8.5	8.5	8.5	8.5	8.5	8.5	8.5	8.5	8.5	8.5	8.5	8.5	8.4
	31	SHC	9.5	9.5	9.5	9.5	9.5	9.5	9.5	9.5	9.5	9.5	9.5	9.5	9.5	9.5	9.4
21		TC	12.0	12.0	12.0	12.0	12.0	12.0	12.0	12.0	12.0	12.0	12.0	12.0	11.8	11.5	11.3
	23	SHC	5.1	5.1	5.1	5.1	5.1	5.1	5.1	5.1	5.1	5.1	5.1	5.1	5.0	4.9	4.8
	25	SHC	6.1	6.1	6.1	6.1	6.1	6.1	6.1	6.1	6.1	6.1	6.1	6.1	6.0	5.9	5.8
	27	SHC	7.1	7.1	7.1	7.1	7.1	7.1	7.1	7.1	7.1	7.1	7.1	7.1	7.0	6.9	6.8
	29	SHC	8.1	8.1	8.1	8.1	8.1	8.1	8.1	8.1	8.1	8.1	8.1	8.1	8.0	7.9	7.8
	31	SHC	9.1	9.1	9.1	9.1	9.1	9.1	9.1	9.1	9.1	9.1	9.1	9.1	9.0	8.9	8.8
22		TC	12.7	12.7	12.7	12.7	12.7	12.7	12.7	12.7	12.7	12.7	12.7	12.4	12.1	11.7	11.6
	25	SHC	5.7	5.7	5.7	5.7	5.7	5.7	5.7	5.7	5.7	5.7	5.7	5.6	5.4	5.3	5.2
	27	SHC	6.7	6.7	6.7	6.7	6.7	6.7	6.7	6.7	6.7	6.7	6.7	6.6	6.4	6.3	6.2
	29	SHC	7.7	7.7	7.7	7.7	7.7	7.7	7.7	7.7	7.7	7.7	7.7	7.6	7.5	7.3	7.3
	31	SHC	8.7	8.7	8.7	8.7	8.7	8.7	8.7	8.7	8.7	8.7	8.7	8.6	8.5	8.3	8.3
23		TC	13.4	13.4	13.4	13.4	13.4	13.4	13.4	13.4	13.4	13.4	13.1	12.7	12.3	12.0	11.8
	25	SHC	5.3	5.3	5.3	5.3	5.3	5.3	5.3	5.3	5.3	5.3	5.1	5.0	4.9	4.7	4.7
	27	SHC	6.3	6.3	6.3	6.3	6.3	6.3	6.3	6.3	6.3	6.3	6.1	6.0	5.9	5.7	5.7
	29	SHC	7.3	7.3	7.3	7.3	7.3	7.3	7.3	7.3	7.3	7.3	7.1	7.0	6.9	6.7	6.7
	31	SHC	8.3	8.3	8.3	8.3	8.3	8.3	8.3	8.3	8.3	8.3	8.1	8.0	7.9	7.7	7.7

3. Cooling Capacity of Indoor Unit

● S-140MT1E5

Power supply : 220/230/240V 1phase-50,60Hz TC : Total Cooling Capacity (kW) SHC : Sensible Heat Capacity (kW)

This data is when the indoor unit connects with 16HP outdoor unit.

RATING CAPACITY:		14.0 kW AIR FLOW RATE: 30.0 m³/min															
EVAPORATOR		CONDENSER															
AIR INTAKE. TEMP		AMBIENT TEMP. (°C)															
W.B.	D.B.		15	17	19	21	23	25	27	29	31	33	35	37	39	41	43
14		TC	9.3	9.3	9.3	9.3	9.3	9.3	9.3	9.3	9.3	9.3	9.3	9.3	9.3	9.3	9.3
	21	SHC	8.3	8.3	8.3	8.3	8.3	8.3	8.3	8.3	8.3	8.3	8.3	8.3	8.3	8.3	8.3
	23	SHC	9.3	9.3	9.3	9.3	9.3	9.3	9.3	9.3	9.3	9.3	9.3	9.3	9.3	9.3	9.3
	25	SHC	9.3	9.3	9.3	9.3	9.3	9.3	9.3	9.3	9.3	9.3	9.3	9.3	9.3	9.3	9.3
	27	SHC	9.3	9.3	9.3	9.3	9.3	9.3	9.3	9.3	9.3	9.3	9.3	9.3	9.3	9.3	9.3
15		TC	10.3	10.3	10.3	10.3	10.3	10.3	10.3	10.3	10.3	10.3	10.3	10.3	10.3	10.3	10.3
	21	SHC	7.9	7.9	7.9	7.9	7.9	7.9	7.9	7.9	7.9	7.9	7.9	7.9	7.9	7.9	7.9
	23	SHC	9.2	9.2	9.2	9.2	9.2	9.2	9.2	9.2	9.2	9.2	9.2	9.2	9.2	9.2	9.2
	25	SHC	10.3	10.3	10.3	10.3	10.3	10.3	10.3	10.3	10.3	10.3	10.3	10.3	10.3	10.3	10.3
	27	SHC	10.3	10.3	10.3	10.3	10.3	10.3	10.3	10.3	10.3	10.3	10.3	10.3	10.3	10.3	10.3
16		TC	11.2	11.2	11.2	11.2	11.2	11.2	11.2	11.2	11.2	11.2	11.2	11.2	11.2	11.2	11.2
	21	SHC	7.6	7.6	7.6	7.6	7.6	7.6	7.6	7.6	7.6	7.6	7.6	7.6	7.6	7.6	7.6
	23	SHC	8.8	8.8	8.8	8.8	8.8	8.8	8.8	8.8	8.8	8.8	8.8	8.8	8.8	8.8	8.8
	25	SHC	10.0	10.0	10.0	10.0	10.0	10.0	10.0	10.0	10.0	10.0	10.0	10.0	10.0	10.0	10.0
	27	SHC	11.2	11.2	11.2	11.2	11.2	11.2	11.2	11.2	11.2	11.2	11.2	11.2	11.2	11.2	11.2
	29	SHC	11.2	11.2	11.2	11.2	11.2	11.2	11.2	11.2	11.2	11.2	11.2	11.2	11.2	11.2	11.2
17		TC	12.1	12.1	12.1	12.1	12.1	12.1	12.1	12.1	12.1	12.1	12.1	12.1	12.1	12.1	12.1
	21	SHC	7.2	7.2	7.2	7.2	7.2	7.2	7.2	7.2	7.2	7.2	7.2	7.2	7.2	7.2	7.2
	23	SHC	8.4	8.4	8.4	8.4	8.4	8.4	8.4	8.4	8.4	8.4	8.4	8.4	8.4	8.4	8.4
	25	SHC	9.6	9.6	9.6	9.6	9.6	9.6	9.6	9.6	9.6	9.6	9.6	9.6	9.6	9.6	9.6
	27	SHC	10.9	10.9	10.9	10.9	10.9	10.9	10.9	10.9	10.9	10.9	10.9	10.9	10.9	10.9	10.9
	29	SHC	12.1	12.1	12.1	12.1	12.1	12.1	12.1	12.1	12.1	12.1	12.1	12.1	12.1	12.1	12.1
18		TC	13.1	13.1	13.1	13.1	13.1	13.1	13.1	13.1	13.1	13.1	13.1	13.1	13.1	13.1	13.1
	21	SHC	6.8	6.8	6.8	6.8	6.8	6.8	6.8	6.8	6.8	6.8	6.8	6.8	6.8	6.8	6.8
	23	SHC	8.0	8.0	8.0	8.0	8.0	8.0	8.0	8.0	8.0	8.0	8.0	8.0	8.0	8.0	8.0
	25	SHC	9.3	9.3	9.3	9.3	9.3	9.3	9.3	9.3	9.3	9.3	9.3	9.3	9.3	9.3	9.3
	27	SHC	10.5	10.5	10.5	10.5	10.5	10.5	10.5	10.5	10.5	10.5	10.5	10.5	10.5	10.5	10.5
	29	SHC	11.7	11.7	11.7	11.7	11.7	11.7	11.7	11.7	11.7	11.7	11.7	11.7	11.7	11.7	11.7
	31	SHC	12.9	12.9	12.9	12.9	12.9	12.9	12.9	12.9	12.9	12.9	12.9	12.9	12.9	12.9	12.9
19		TC	14.0	14.0	14.0	14.0	14.0	14.0	14.0	14.0	14.0	14.0	14.0	14.0	14.0	14.0	14.0
	21	SHC	6.4	6.4	6.4	6.4	6.4	6.4	6.4	6.4	6.4	6.4	6.4	6.4	6.4	6.4	6.4
	23	SHC	7.6	7.6	7.6	7.6	7.6	7.6	7.6	7.6	7.6	7.6	7.6	7.6	7.6	7.6	7.6
	25	SHC	8.8	8.8	8.8	8.8	8.8	8.8	8.8	8.8	8.8	8.8	8.8	8.8	8.8	8.8	8.8
	27	SHC	10.1	10.1	10.1	10.1	10.1	10.1	10.1	10.1	10.1	10.1	10.1	10.1	10.1	10.1	10.1
	29	SHC	11.3	11.3	11.3	11.3	11.3	11.3	11.3	11.3	11.3	11.3	11.3	11.3	11.3	11.3	11.3
	31	SHC	12.5	12.5	12.5	12.5	12.5	12.5	12.5	12.5	12.5	12.5	12.5	12.5	12.5	12.5	12.5
20		TC	14.9	14.9	14.9	14.9	14.9	14.9	14.9	14.9	14.9	14.9	14.9	14.9	14.9	14.9	14.6
	23	SHC	7.1	7.1	7.1	7.1	7.1	7.1	7.1	7.1	7.1	7.1	7.1	7.1	7.1	7.1	7.0
	25	SHC	8.4	8.4	8.4	8.4	8.4	8.4	8.4	8.4	8.4	8.4	8.4	8.4	8.4	8.4	8.3
	27	SHC	9.6	9.6	9.6	9.6	9.6	9.6	9.6	9.6	9.6	9.6	9.6	9.6	9.6	9.6	9.5
	29	SHC	10.9	10.9	10.9	10.9	10.9	10.9	10.9	10.9	10.9	10.9	10.9	10.9	10.9	10.8	10.7
	31	SHC	12.1	12.1	12.1	12.1	12.1	12.1	12.1	12.1	12.1	12.1	12.1	12.1	12.1	12.0	12.0
21		TC	15.9	15.9	15.9	15.9	15.9	15.9	15.9	15.9	15.9	15.9	15.9	15.9	15.6	15.2	15.0
	23	SHC	6.7	6.7	6.7	6.7	6.7	6.7	6.7	6.7	6.7	6.7	6.7	6.7	6.6	6.4	6.3
	25	SHC	7.9	7.9	7.9	7.9	7.9	7.9	7.9	7.9	7.9	7.9	7.9	7.9	7.8	7.6	7.6
	27	SHC	9.1	9.1	9.1	9.1	9.1	9.1	9.1	9.1	9.1	9.1	9.1	9.1	9.1	8.9	8.8
	29	SHC	10.4	10.4	10.4	10.4	10.4	10.4	10.4	10.4	10.4	10.4	10.4	10.4	10.3	10.1	10.0
	31	SHC	11.6	11.6	11.6	11.6	11.6	11.6	11.6	11.6	11.6	11.6	11.6	11.6	11.5	11.3	11.3
22		TC	16.8	16.8	16.8	16.8	16.8	16.8	16.8	16.8	16.8	16.8	16.8	16.4	15.9	15.5	15.3
	25	SHC	7.4	7.4	7.4	7.4	7.4	7.4	7.4	7.4	7.4	7.4	7.4	7.3	7.1	6.9	6.8
	27	SHC	8.7	8.7	8.7	8.7	8.7	8.7	8.7	8.7	8.7	8.7	8.7	8.5	8.3	8.2	8.1
	29	SHC	9.9	9.9	9.9	9.9	9.9	9.9	9.9	9.9	9.9	9.9	9.9	9.8	9.6	9.4	9.3
	31	SHC	11.1	11.1	11.1	11.1	11.1	11.1	11.1	11.1	11.1	11.1	11.1	11.0	10.8	10.6	10.5
23		TC	17.7	17.7	17.7	17.7	17.7	17.7	17.7	17.7	17.7	17.7	17.2	16.7	16.3	15.8	15.6
	25	SHC	6.9	6.9	6.9	6.9	6.9	6.9	6.9	6.9	6.9	6.9	6.7	6.5	6.4	6.2	6.1
	27	SHC	8.1	8.1	8.1	8.1	8.1	8.1	8.1	8.1	8.1	8.1	8.0	7.8	7.6	7.4	7.3
	29	SHC	9.4	9.4	9.4	9.4	9.4	9.4	9.4	9.4	9.4	9.4	9.2	9.0	8.8	8.7	8.6
	31	SHC	10.6	10.6	10.6	10.6	10.6	10.6	10.6	10.6	10.6	10.6	10.4	10.2	10.1	9.9	9.8

3. Cooling Capacity of Indoor Unit

3-8. Low Silhouette Ducted Type (F1 Type)

- S-22MF1E5

Power supply : 220/230/240V 1phase-50,60Hz TC : Total Cooling Capacity (kW) SHC : Sensible Heat Capacity (kW)
This data is when the indoor unit connects with 16HP outdoor unit.

RATING CAPACITY:		2.2 kW AIR FLOW RATE: 10.0 m³/min															
EVAPORATOR		CONDENSER															
AIR INTAKE. TEMP		AMBIENT TEMP. (°C)															
W.B.	D.B.		15	17	19	21	23	25	27	29	31	33	35	37	39	41	43
14		TC	1.5	1.5	1.5	1.5	1.5	1.5	1.5	1.5	1.5	1.5	1.5	1.5	1.5	1.5	1.5
	21	SHC	1.4	1.4	1.4	1.4	1.4	1.4	1.4	1.4	1.4	1.4	1.4	1.4	1.4	1.4	1.4
	23	SHC	1.5	1.5	1.5	1.5	1.5	1.5	1.5	1.5	1.5	1.5	1.5	1.5	1.5	1.5	1.5
	25	SHC	1.5	1.5	1.5	1.5	1.5	1.5	1.5	1.5	1.5	1.5	1.5	1.5	1.5	1.5	1.5
	27	SHC	1.5	1.5	1.5	1.5	1.5	1.5	1.5	1.5	1.5	1.5	1.5	1.5	1.5	1.5	1.5
15		TC	1.6	1.6	1.6	1.6	1.6	1.6	1.6	1.6	1.6	1.6	1.6	1.6	1.6	1.6	1.6
	21	SHC	1.3	1.3	1.3	1.3	1.3	1.3	1.3	1.3	1.3	1.3	1.3	1.3	1.3	1.3	1.3
	23	SHC	1.5	1.5	1.5	1.5	1.5	1.5	1.5	1.5	1.5	1.5	1.5	1.5	1.5	1.5	1.5
	25	SHC	1.6	1.6	1.6	1.6	1.6	1.6	1.6	1.6	1.6	1.6	1.6	1.6	1.6	1.6	1.6
	27	SHC	1.6	1.6	1.6	1.6	1.6	1.6	1.6	1.6	1.6	1.6	1.6	1.6	1.6	1.6	1.6
16		TC	1.8	1.8	1.8	1.8	1.8	1.8	1.8	1.8	1.8	1.8	1.8	1.8	1.8	1.8	1.8
	21	SHC	1.2	1.2	1.2	1.2	1.2	1.2	1.2	1.2	1.2	1.2	1.2	1.2	1.2	1.2	1.2
	23	SHC	1.4	1.4	1.4	1.4	1.4	1.4	1.4	1.4	1.4	1.4	1.4	1.4	1.4	1.4	1.4
	25	SHC	1.6	1.6	1.6	1.6	1.6	1.6	1.6	1.6	1.6	1.6	1.6	1.6	1.6	1.6	1.6
	27	SHC	1.8	1.8	1.8	1.8	1.8	1.8	1.8	1.8	1.8	1.8	1.8	1.8	1.8	1.8	1.8
	29	SHC	1.8	1.8	1.8	1.8	1.8	1.8	1.8	1.8	1.8	1.8	1.8	1.8	1.8	1.8	1.8
17		TC	1.9	1.9	1.9	1.9	1.9	1.9	1.9	1.9	1.9	1.9	1.9	1.9	1.9	1.9	1.9
	21	SHC	1.2	1.2	1.2	1.2	1.2	1.2	1.2	1.2	1.2	1.2	1.2	1.2	1.2	1.2	1.2
	23	SHC	1.4	1.4	1.4	1.4	1.4	1.4	1.4	1.4	1.4	1.4	1.4	1.4	1.4	1.4	1.4
	25	SHC	1.6	1.6	1.6	1.6	1.6	1.6	1.6	1.6	1.6	1.6	1.6	1.6	1.6	1.6	1.6
	27	SHC	1.8	1.8	1.8	1.8	1.8	1.8	1.8	1.8	1.8	1.8	1.8	1.8	1.8	1.8	1.8
	29	SHC	1.9	1.9	1.9	1.9	1.9	1.9	1.9	1.9	1.9	1.9	1.9	1.9	1.9	1.9	1.9
18		TC	2.1	2.1	2.1	2.1	2.1	2.1	2.1	2.1	2.1	2.1	2.1	2.1	2.1	2.1	2.1
	21	SHC	1.1	1.1	1.1	1.1	1.1	1.1	1.1	1.1	1.1	1.1	1.1	1.1	1.1	1.1	1.1
	23	SHC	1.3	1.3	1.3	1.3	1.3	1.3	1.3	1.3	1.3	1.3	1.3	1.3	1.3	1.3	1.3
	25	SHC	1.5	1.5	1.5	1.5	1.5	1.5	1.5	1.5	1.5	1.5	1.5	1.5	1.5	1.5	1.5
	27	SHC	1.7	1.7	1.7	1.7	1.7	1.7	1.7	1.7	1.7	1.7	1.7	1.7	1.7	1.7	1.7
	29	SHC	1.9	1.9	1.9	1.9	1.9	1.9	1.9	1.9	1.9	1.9	1.9	1.9	1.9	1.9	1.9
	31	SHC	2.1	2.1	2.1	2.1	2.1	2.1	2.1	2.1	2.1	2.1	2.1	2.1	2.1	2.1	2.1
19		TC	2.2	2.2	2.2	2.2	2.2	2.2	2.2	2.2	2.2	2.2	2.2	2.2	2.2	2.2	2.2
	21	SHC	1.0	1.0	1.0	1.0	1.0	1.0	1.0	1.0	1.0	1.0	1.0	1.0	1.0	1.0	1.0
	23	SHC	1.2	1.2	1.2	1.2	1.2	1.2	1.2	1.2	1.2	1.2	1.2	1.2	1.2	1.2	1.2
	25	SHC	1.4	1.4	1.4	1.4	1.4	1.4	1.4	1.4	1.4	1.4	1.4	1.4	1.4	1.4	1.4
	27	SHC	1.6	1.6	1.6	1.6	1.6	1.6	1.6	1.6	1.6	1.6	1.6	1.6	1.6	1.6	1.6
	29	SHC	1.9	1.9	1.9	1.9	1.9	1.9	1.9	1.9	1.9	1.9	1.9	1.9	1.9	1.9	1.9
	31	SHC	2.1	2.1	2.1	2.1	2.1	2.1	2.1	2.1	2.1	2.1	2.1	2.1	2.1	2.1	2.1
20		TC	2.3	2.3	2.3	2.3	2.3	2.3	2.3	2.3	2.3	2.3	2.3	2.3	2.3	2.3	2.3
	23	SHC	1.1	1.1	1.1	1.1	1.1	1.1	1.1	1.1	1.1	1.1	1.1	1.1	1.1	1.1	1.1
	25	SHC	1.4	1.4	1.4	1.4	1.4	1.4	1.4	1.4	1.4	1.4	1.4	1.4	1.4	1.3	1.3
	27	SHC	1.6	1.6	1.6	1.6	1.6	1.6	1.6	1.6	1.6	1.6	1.6	1.6	1.6	1.6	1.5
	29	SHC	1.8	1.8	1.8	1.8	1.8	1.8	1.8	1.8	1.8	1.8	1.8	1.8	1.8	1.8	1.8
	31	SHC	2.0	2.0	2.0	2.0	2.0	2.0	2.0	2.0	2.0	2.0	2.0	2.0	2.0	2.0	2.0
21		TC	2.5	2.5	2.5	2.5	2.5	2.5	2.5	2.5	2.5	2.5	2.5	2.5	2.5	2.4	2.3
	23	SHC	1.1	1.1	1.1	1.1	1.1	1.1	1.1	1.1	1.1	1.1	1.1	1.1	1.0	1.0	1.0
	25	SHC	1.3	1.3	1.3	1.3	1.3	1.3	1.3	1.3	1.3	1.3	1.3	1.3	1.3	1.2	1.2
	27	SHC	1.5	1.5	1.5	1.5	1.5	1.5	1.5	1.5	1.5	1.5	1.5	1.5	1.5	1.4	1.4
	29	SHC	1.7	1.7	1.7	1.7	1.7	1.7	1.7	1.7	1.7	1.7	1.7	1.7	1.7	1.6	1.6
	31	SHC	1.9	1.9	1.9	1.9	1.9	1.9	1.9	1.9	1.9	1.9	1.9	1.9	1.9	1.9	1.8
22		TC	2.6	2.6	2.6	2.6	2.6	2.6	2.6	2.6	2.6	2.6	2.6	2.6	2.5	2.4	2.4
	25	SHC	1.2	1.2	1.2	1.2	1.2	1.2	1.2	1.2	1.2	1.2	1.2	1.2	1.1	1.1	1.1
	27	SHC	1.4	1.4	1.4	1.4	1.4	1.4	1.4	1.4	1.4	1.4	1.4	1.4	1.3	1.3	1.3
	29	SHC	1.6	1.6	1.6	1.6	1.6	1.6	1.6	1.6	1.6	1.6	1.6	1.6	1.6	1.5	1.5
	31	SHC	1.8	1.8	1.8	1.8	1.8	1.8	1.8	1.8	1.8	1.8	1.8	1.8	1.8	1.7	1.7
23		TC	2.8	2.8	2.8	2.8	2.8	2.8	2.8	2.8	2.8	2.8	2.7	2.6	2.6	2.5	2.4
	25	SHC	1.1	1.1	1.1	1.1	1.1	1.1	1.1	1.1	1.1	1.1	1.1	1.0	1.0	1.0	1.0
	27	SHC	1.3	1.3	1.3	1.3	1.3	1.3	1.3	1.3	1.3	1.3	1.3	1.2	1.2	1.2	1.2
	29	SHC	1.5	1.5	1.5	1.5	1.5	1.5	1.5	1.5	1.5	1.5	1.5	1.5	1.4	1.4	1.4
	31	SHC	1.7	1.7	1.7	1.7	1.7	1.7	1.7	1.7	1.7	1.7	1.7	1.7	1.6	1.6	1.6

3. Cooling Capacity of Indoor Unit

● S-28MF1E5

Power supply : 220/230/240V 1phase-50,60Hz TC : Total Cooling Capacity (kW) SHC : Sensible Heat Capacity (kW)

This data is when the indoor unit connects with 16HP outdoor unit.

RATING CAPACITY:		2.8 kW AIR FLOW RATE: 10.0 m³/min															
EVAPORATOR		CONDENSER															
AIR INTAKE. TEMP		AMBIENT TEMP. (°C)															
W.B.	D.B.		15	17	19	21	23	25	27	29	31	33	35	37	39	41	43
14		TC	1.9	1.9	1.9	1.9	1.9	1.9	1.9	1.9	1.9	1.9	1.9	1.9	1.9	1.9	1.9
	21	SHC	1.7	1.7	1.7	1.7	1.7	1.7	1.7	1.7	1.7	1.7	1.7	1.7	1.7	1.7	1.7
	23	SHC	1.9	1.9	1.9	1.9	1.9	1.9	1.9	1.9	1.9	1.9	1.9	1.9	1.9	1.9	1.9
	25	SHC	1.9	1.9	1.9	1.9	1.9	1.9	1.9	1.9	1.9	1.9	1.9	1.9	1.9	1.9	1.9
	27	SHC	1.9	1.9	1.9	1.9	1.9	1.9	1.9	1.9	1.9	1.9	1.9	1.9	1.9	1.9	1.9
15		TC	2.1	2.1	2.1	2.1	2.1	2.1	2.1	2.1	2.1	2.1	2.1	2.1	2.1	2.1	2.1
	21	SHC	1.6	1.6	1.6	1.6	1.6	1.6	1.6	1.6	1.6	1.6	1.6	1.6	1.6	1.6	1.6
	23	SHC	1.8	1.8	1.8	1.8	1.8	1.8	1.8	1.8	1.8	1.8	1.8	1.8	1.8	1.8	1.8
	25	SHC	2.1	2.1	2.1	2.1	2.1	2.1	2.1	2.1	2.1	2.1	2.1	2.1	2.1	2.1	2.1
	27	SHC	2.1	2.1	2.1	2.1	2.1	2.1	2.1	2.1	2.1	2.1	2.1	2.1	2.1	2.1	2.1
16		TC	2.2	2.2	2.2	2.2	2.2	2.2	2.2	2.2	2.2	2.2	2.2	2.2	2.2	2.2	2.2
	21	SHC	1.5	1.5	1.5	1.5	1.5	1.5	1.5	1.5	1.5	1.5	1.5	1.5	1.5	1.5	1.5
	23	SHC	1.8	1.8	1.8	1.8	1.8	1.8	1.8	1.8	1.8	1.8	1.8	1.8	1.8	1.8	1.8
	25	SHC	2.0	2.0	2.0	2.0	2.0	2.0	2.0	2.0	2.0	2.0	2.0	2.0	2.0	2.0	2.0
	27	SHC	2.2	2.2	2.2	2.2	2.2	2.2	2.2	2.2	2.2	2.2	2.2	2.2	2.2	2.2	2.2
	29	SHC	2.2	2.2	2.2	2.2	2.2	2.2	2.2	2.2	2.2	2.2	2.2	2.2	2.2	2.2	2.2
17		TC	2.4	2.4	2.4	2.4	2.4	2.4	2.4	2.4	2.4	2.4	2.4	2.4	2.4	2.4	2.4
	21	SHC	1.4	1.4	1.4	1.4	1.4	1.4	1.4	1.4	1.4	1.4	1.4	1.4	1.4	1.4	1.4
	23	SHC	1.7	1.7	1.7	1.7	1.7	1.7	1.7	1.7	1.7	1.7	1.7	1.7	1.7	1.7	1.7
	25	SHC	1.9	1.9	1.9	1.9	1.9	1.9	1.9	1.9	1.9	1.9	1.9	1.9	1.9	1.9	1.9
	27	SHC	2.2	2.2	2.2	2.2	2.2	2.2	2.2	2.2	2.2	2.2	2.2	2.2	2.2	2.2	2.2
	29	SHC	2.4	2.4	2.4	2.4	2.4	2.4	2.4	2.4	2.4	2.4	2.4	2.4	2.4	2.4	2.4
18		TC	2.6	2.6	2.6	2.6	2.6	2.6	2.6	2.6	2.6	2.6	2.6	2.6	2.6	2.6	2.6
	21	SHC	1.4	1.4	1.4	1.4	1.4	1.4	1.4	1.4	1.4	1.4	1.4	1.4	1.4	1.4	1.4
	23	SHC	1.6	1.6	1.6	1.6	1.6	1.6	1.6	1.6	1.6	1.6	1.6	1.6	1.6	1.6	1.6
	25	SHC	1.9	1.9	1.9	1.9	1.9	1.9	1.9	1.9	1.9	1.9	1.9	1.9	1.9	1.9	1.9
	27	SHC	2.1	2.1	2.1	2.1	2.1	2.1	2.1	2.1	2.1	2.1	2.1	2.1	2.1	2.1	2.1
	29	SHC	2.4	2.4	2.4	2.4	2.4	2.4	2.4	2.4	2.4	2.4	2.4	2.4	2.4	2.4	2.4
	31	SHC	2.6	2.6	2.6	2.6	2.6	2.6	2.6	2.6	2.6	2.6	2.6	2.6	2.6	2.6	2.6
19		TC	2.8	2.8	2.8	2.8	2.8	2.8	2.8	2.8	2.8	2.8	2.8	2.8	2.8	2.8	2.8
	21	SHC	1.3	1.3	1.3	1.3	1.3	1.3	1.3	1.3	1.3	1.3	1.3	1.3	1.3	1.3	1.3
	23	SHC	1.5	1.5	1.5	1.5	1.5	1.5	1.5	1.5	1.5	1.5	1.5	1.5	1.5	1.5	1.5
	25	SHC	1.8	1.8	1.8	1.8	1.8	1.8	1.8	1.8	1.8	1.8	1.8	1.8	1.8	1.8	1.8
	27	SHC	2.0	2.0	2.0	2.0	2.0	2.0	2.0	2.0	2.0	2.0	2.0	2.0	2.0	2.0	2.0
	29	SHC	2.3	2.3	2.3	2.3	2.3	2.3	2.3	2.3	2.3	2.3	2.3	2.3	2.3	2.3	2.3
	31	SHC	2.5	2.5	2.5	2.5	2.5	2.5	2.5	2.5	2.5	2.5	2.5	2.5	2.5	2.5	2.5
20		TC	3.0	3.0	3.0	3.0	3.0	3.0	3.0	3.0	3.0	3.0	3.0	3.0	3.0	3.0	2.9
	23	SHC	1.4	1.4	1.4	1.4	1.4	1.4	1.4	1.4	1.4	1.4	1.4	1.4	1.4	1.4	1.4
	25	SHC	1.7	1.7	1.7	1.7	1.7	1.7	1.7	1.7	1.7	1.7	1.7	1.7	1.7	1.7	1.7
	27	SHC	1.9	1.9	1.9	1.9	1.9	1.9	1.9	1.9	1.9	1.9	1.9	1.9	1.9	1.9	1.9
	29	SHC	2.2	2.2	2.2	2.2	2.2	2.2	2.2	2.2	2.2	2.2	2.2	2.2	2.2	2.2	2.2
	31	SHC	2.4	2.4	2.4	2.4	2.4	2.4	2.4	2.4	2.4	2.4	2.4	2.4	2.4	2.4	2.4
21		TC	3.2	3.2	3.2	3.2	3.2	3.2	3.2	3.2	3.2	3.2	3.2	3.2	3.1	3.0	3.0
	23	SHC	1.3	1.3	1.3	1.3	1.3	1.3	1.3	1.3	1.3	1.3	1.3	1.3	1.3	1.3	1.3
	25	SHC	1.6	1.6	1.6	1.6	1.6	1.6	1.6	1.6	1.6	1.6	1.6	1.6	1.6	1.5	1.5
	27	SHC	1.8	1.8	1.8	1.8	1.8	1.8	1.8	1.8	1.8	1.8	1.8	1.8	1.8	1.8	1.8
	29	SHC	2.1	2.1	2.1	2.1	2.1	2.1	2.1	2.1	2.1	2.1	2.1	2.1	2.1	2.0	2.0
	31	SHC	2.3	2.3	2.3	2.3	2.3	2.3	2.3	2.3	2.3	2.3	2.3	2.3	2.3	2.3	2.3
22		TC	3.4	3.4	3.4	3.4	3.4	3.4	3.4	3.4	3.4	3.4	3.4	3.3	3.2	3.1	3.1
	25	SHC	1.5	1.5	1.5	1.5	1.5	1.5	1.5	1.5	1.5	1.5	1.5	1.5	1.4	1.4	1.4
	27	SHC	1.7	1.7	1.7	1.7	1.7	1.7	1.7	1.7	1.7	1.7	1.7	1.7	1.7	1.6	1.6
	29	SHC	2.0	2.0	2.0	2.0	2.0	2.0	2.0	2.0	2.0	2.0	2.0	2.0	1.9	1.9	1.9
	31	SHC	2.2	2.2	2.2	2.2	2.2	2.2	2.2	2.2	2.2	2.2	2.2	2.2	2.2	2.1	2.1
23		TC	3.5	3.5	3.5	3.5	3.5	3.5	3.5	3.5	3.5	3.5	3.4	3.3	3.3	3.2	3.1
	25	SHC	1.4	1.4	1.4	1.4	1.4	1.4	1.4	1.4	1.4	1.4	1.3	1.3	1.3	1.2	1.2
	27	SHC	1.6	1.6	1.6	1.6	1.6	1.6	1.6	1.6	1.6	1.6	1.6	1.6	1.5	1.5	1.5
	29	SHC	1.9	1.9	1.9	1.9	1.9	1.9	1.9	1.9	1.9	1.9	1.9	1.8	1.8	1.7	1.7
	31	SHC	2.1	2.1	2.1	2.1	2.1	2.1	2.1	2.1	2.1	2.1	2.1	2.1	2.0	2.0	2.0

3. Cooling Capacity of Indoor Unit

- S-36MF1E5

Power supply : 220/230/240V 1phase-50,60Hz TC : Total Cooling Capacity (kW) SHC : Sensible Heat Capacity (kW)

This data is when the indoor unit connects with 16HP outdoor unit.

RATING CAPACITY:		3.6 kW	AIR FLOW RATE: 10.0 m³/min														
EVAPORATOR			CONDENSER														
AIR INTAKE. TEMP			AMBIENT TEMP. (°C)														
W.B.	D.B.		15	17	19	21	23	25	27	29	31	33	35	37	39	41	43
14		TC	2.4	2.4	2.4	2.4	2.4	2.4	2.4	2.4	2.4	2.4	2.4	2.4	2.4	2.4	2.4
	21	SHC	1.9	1.9	1.9	1.9	1.9	1.9	1.9	1.9	1.9	1.9	1.9	1.9	1.9	1.9	1.9
	23	SHC	2.1	2.1	2.1	2.1	2.1	2.1	2.1	2.1	2.1	2.1	2.1	2.1	2.1	2.1	2.1
	25	SHC	2.3	2.3	2.3	2.3	2.3	2.3	2.3	2.3	2.3	2.3	2.3	2.3	2.3	2.3	2.3
	27	SHC	2.4	2.4	2.4	2.4	2.4	2.4	2.4	2.4	2.4	2.4	2.4	2.4	2.4	2.4	2.4
15		TC	2.6	2.6	2.6	2.6	2.6	2.6	2.6	2.6	2.6	2.6	2.6	2.6	2.6	2.6	2.6
	21	SHC	1.8	1.8	1.8	1.8	1.8	1.8	1.8	1.8	1.8	1.8	1.8	1.8	1.8	1.8	1.8
	23	SHC	2.1	2.1	2.1	2.1	2.1	2.1	2.1	2.1	2.1	2.1	2.1	2.1	2.1	2.1	2.1
	25	SHC	2.3	2.3	2.3	2.3	2.3	2.3	2.3	2.3	2.3	2.3	2.3	2.3	2.3	2.3	2.3
	27	SHC	2.5	2.5	2.5	2.5	2.5	2.5	2.5	2.5	2.5	2.5	2.5	2.5	2.5	2.5	2.5
16		TC	2.9	2.9	2.9	2.9	2.9	2.9	2.9	2.9	2.9	2.9	2.9	2.9	2.9	2.9	2.9
	21	SHC	1.8	1.8	1.8	1.8	1.8	1.8	1.8	1.8	1.8	1.8	1.8	1.8	1.8	1.8	1.8
	23	SHC	2.0	2.0	2.0	2.0	2.0	2.0	2.0	2.0	2.0	2.0	2.0	2.0	2.0	2.0	2.0
	25	SHC	2.3	2.3	2.3	2.3	2.3	2.3	2.3	2.3	2.3	2.3	2.3	2.3	2.3	2.3	2.3
	27	SHC	2.5	2.5	2.5	2.5	2.5	2.5	2.5	2.5	2.5	2.5	2.5	2.5	2.5	2.5	2.5
	29	SHC	2.7	2.7	2.7	2.7	2.7	2.7	2.7	2.7	2.7	2.7	2.7	2.7	2.7	2.7	2.7
17		TC	3.1	3.1	3.1	3.1	3.1	3.1	3.1	3.1	3.1	3.1	3.1	3.1	3.1	3.1	3.1
	21	SHC	1.7	1.7	1.7	1.7	1.7	1.7	1.7	1.7	1.7	1.7	1.7	1.7	1.7	1.7	1.7
	23	SHC	2.0	2.0	2.0	2.0	2.0	2.0	2.0	2.0	2.0	2.0	2.0	2.0	2.0	2.0	2.0
	25	SHC	2.2	2.2	2.2	2.2	2.2	2.2	2.2	2.2	2.2	2.2	2.2	2.2	2.2	2.2	2.2
	27	SHC	2.4	2.4	2.4	2.4	2.4	2.4	2.4	2.4	2.4	2.4	2.4	2.4	2.4	2.4	2.4
	29	SHC	2.7	2.7	2.7	2.7	2.7	2.7	2.7	2.7	2.7	2.7	2.7	2.7	2.7	2.7	2.7
18		TC	3.4	3.4	3.4	3.4	3.4	3.4	3.4	3.4	3.4	3.4	3.4	3.4	3.4	3.4	3.4
	21	SHC	1.7	1.7	1.7	1.7	1.7	1.7	1.7	1.7	1.7	1.7	1.7	1.7	1.7	1.7	1.7
	23	SHC	1.9	1.9	1.9	1.9	1.9	1.9	1.9	1.9	1.9	1.9	1.9	1.9	1.9	1.9	1.9
	25	SHC	2.2	2.2	2.2	2.2	2.2	2.2	2.2	2.2	2.2	2.2	2.2	2.2	2.2	2.2	2.2
	27	SHC	2.4	2.4	2.4	2.4	2.4	2.4	2.4	2.4	2.4	2.4	2.4	2.4	2.4	2.4	2.4
	29	SHC	2.6	2.6	2.6	2.6	2.6	2.6	2.6	2.6	2.6	2.6	2.6	2.6	2.6	2.6	2.6
	31	SHC	2.8	2.8	2.8	2.8	2.8	2.8	2.8	2.8	2.8	2.8	2.8	2.8	2.8	2.8	2.8
19		TC	3.6	3.6	3.6	3.6	3.6	3.6	3.6	3.6	3.6	3.6	3.6	3.6	3.6	3.6	3.6
	21	SHC	1.6	1.6	1.6	1.6	1.6	1.6	1.6	1.6	1.6	1.6	1.6	1.6	1.6	1.6	1.6
	23	SHC	1.9	1.9	1.9	1.9	1.9	1.9	1.9	1.9	1.9	1.9	1.9	1.9	1.9	1.9	1.9
	25	SHC	2.1	2.1	2.1	2.1	2.1	2.1	2.1	2.1	2.1	2.1	2.1	2.1	2.1	2.1	2.1
	27	SHC	2.3	2.3	2.3	2.3	2.3	2.3	2.3	2.3	2.3	2.3	2.3	2.3	2.3	2.3	2.3
	29	SHC	2.6	2.6	2.6	2.6	2.6	2.6	2.6	2.6	2.6	2.6	2.6	2.6	2.6	2.6	2.6
	31	SHC	2.8	2.8	2.8	2.8	2.8	2.8	2.8	2.8	2.8	2.8	2.8	2.8	2.8	2.8	2.8
20		TC	3.8	3.8	3.8	3.8	3.8	3.8	3.8	3.8	3.8	3.8	3.8	3.8	3.8	3.8	3.8
	23	SHC	1.8	1.8	1.8	1.8	1.8	1.8	1.8	1.8	1.8	1.8	1.8	1.8	1.8	1.8	1.8
	25	SHC	2.0	2.0	2.0	2.0	2.0	2.0	2.0	2.0	2.0	2.0	2.0	2.0	2.0	2.0	2.0
	27	SHC	2.3	2.3	2.3	2.3	2.3	2.3	2.3	2.3	2.3	2.3	2.3	2.3	2.3	2.3	2.2
	29	SHC	2.5	2.5	2.5	2.5	2.5	2.5	2.5	2.5	2.5	2.5	2.5	2.5	2.5	2.5	2.5
	31	SHC	2.7	2.7	2.7	2.7	2.7	2.7	2.7	2.7	2.7	2.7	2.7	2.7	2.7	2.7	2.7
21		TC	4.1	4.1	4.1	4.1	4.1	4.1	4.1	4.1	4.1	4.1	4.1	4.1	4.0	3.9	3.8
	23	SHC	1.7	1.7	1.7	1.7	1.7	1.7	1.7	1.7	1.7	1.7	1.7	1.7	1.7	1.7	1.6
	25	SHC	2.0	2.0	2.0	2.0	2.0	2.0	2.0	2.0	2.0	2.0	2.0	2.0	1.9	1.9	1.9
	27	SHC	2.2	2.2	2.2	2.2	2.2	2.2	2.2	2.2	2.2	2.2	2.2	2.2	2.2	2.1	2.1
	29	SHC	2.4	2.4	2.4	2.4	2.4	2.4	2.4	2.4	2.4	2.4	2.4	2.4	2.4	2.3	2.3
	31	SHC	2.7	2.7	2.7	2.7	2.7	2.7	2.7	2.7	2.7	2.7	2.7	2.7	2.6	2.6	2.5
22		TC	4.3	4.3	4.3	4.3	4.3	4.3	4.3	4.3	4.3	4.3	4.3	4.2	4.1	4.0	3.9
	25	SHC	1.9	1.9	1.9	1.9	1.9	1.9	1.9	1.9	1.9	1.9	1.9	1.8	1.8	1.7	1.7
	27	SHC	2.1	2.1	2.1	2.1	2.1	2.1	2.1	2.1	2.1	2.1	2.1	2.1	2.0	2.0	1.9
	29	SHC	2.3	2.3	2.3	2.3	2.3	2.3	2.3	2.3	2.3	2.3	2.3	2.3	2.3	2.2	2.2
	31	SHC	2.6	2.6	2.6	2.6	2.6	2.6	2.6	2.6	2.6	2.6	2.6	2.5	2.5	2.4	2.4
23		TC	4.6	4.6	4.6	4.6	4.6	4.6	4.6	4.6	4.6	4.6	4.4	4.3	4.2	4.1	4.0
	25	SHC	1.8	1.8	1.8	1.8	1.8	1.8	1.8	1.8	1.8	1.8	1.8	1.7	1.6	1.6	1.6
	27	SHC	2.0	2.0	2.0	2.0	2.0	2.0	2.0	2.0	2.0	2.0	2.0	1.9	1.9	1.8	1.8
	29	SHC	2.3	2.3	2.3	2.3	2.3	2.3	2.3	2.3	2.3	2.3	2.2	2.2	2.1	2.1	2.0
	31	SHC	2.5	2.5	2.5	2.5	2.5	2.5	2.5	2.5	2.5	2.5	2.4	2.4	2.3	2.3	2.3

3. Cooling Capacity of Indoor Unit

● S-45MF1E5

Power supply : 220/230/240V 1phase-50,60Hz TC : Total Cooling Capacity (kW) SHC : Sensible Heat Capacity (kW)

This data is when the indoor unit connects with 16HP outdoor unit.

RATING CAPACITY:		4.5 kW	AIR FLOW RATE: 12.0 m³/min														
EVAPORATOR			CONDENSER														
AIR INTAKE. TEMP			AMBIENT TEMP. (°C)														
W.B.	D.B.		15	17	19	21	23	25	27	29	31	33	35	37	39	41	43
14		TC	3.0	3.0	3.0	3.0	3.0	3.0	3.0	3.0	3.0	3.0	3.0	3.0	3.0	3.0	3.0
	21	SHC	2.3	2.3	2.3	2.3	2.3	2.3	2.3	2.3	2.3	2.3	2.3	2.3	2.3	2.3	2.3
	23	SHC	2.5	2.5	2.5	2.5	2.5	2.5	2.5	2.5	2.5	2.5	2.5	2.5	2.5	2.5	2.5
	25	SHC	2.8	2.8	2.8	2.8	2.8	2.8	2.8	2.8	2.8	2.8	2.8	2.8	2.8	2.8	2.8
	27	SHC	3.0	3.0	3.0	3.0	3.0	3.0	3.0	3.0	3.0	3.0	3.0	3.0	3.0	3.0	3.0
15		TC	3.3	3.3	3.3	3.3	3.3	3.3	3.3	3.3	3.3	3.3	3.3	3.3	3.3	3.3	3.3
	21	SHC	2.2	2.2	2.2	2.2	2.2	2.2	2.2	2.2	2.2	2.2	2.2	2.2	2.2	2.2	2.2
	23	SHC	2.5	2.5	2.5	2.5	2.5	2.5	2.5	2.5	2.5	2.5	2.5	2.5	2.5	2.5	2.5
	25	SHC	2.8	2.8	2.8	2.8	2.8	2.8	2.8	2.8	2.8	2.8	2.8	2.8	2.8	2.8	2.8
	27	SHC	3.0	3.0	3.0	3.0	3.0	3.0	3.0	3.0	3.0	3.0	3.0	3.0	3.0	3.0	3.0
16		TC	3.6	3.6	3.6	3.6	3.6	3.6	3.6	3.6	3.6	3.6	3.6	3.6	3.6	3.6	3.6
	21	SHC	2.2	2.2	2.2	2.2	2.2	2.2	2.2	2.2	2.2	2.2	2.2	2.2	2.2	2.2	2.2
	23	SHC	2.5	2.5	2.5	2.5	2.5	2.5	2.5	2.5	2.5	2.5	2.5	2.5	2.5	2.5	2.5
	25	SHC	2.7	2.7	2.7	2.7	2.7	2.7	2.7	2.7	2.7	2.7	2.7	2.7	2.7	2.7	2.7
	27	SHC	3.0	3.0	3.0	3.0	3.0	3.0	3.0	3.0	3.0	3.0	3.0	3.0	3.0	3.0	3.0
	29	SHC	3.2	3.2	3.2	3.2	3.2	3.2	3.2	3.2	3.2	3.2	3.2	3.2	3.2	3.2	3.2
17		TC	3.9	3.9	3.9	3.9	3.9	3.9	3.9	3.9	3.9	3.9	3.9	3.9	3.9	3.9	3.9
	21	SHC	2.2	2.2	2.2	2.2	2.2	2.2	2.2	2.2	2.2	2.2	2.2	2.2	2.2	2.2	2.2
	23	SHC	2.4	2.4	2.4	2.4	2.4	2.4	2.4	2.4	2.4	2.4	2.4	2.4	2.4	2.4	2.4
	25	SHC	2.7	2.7	2.7	2.7	2.7	2.7	2.7	2.7	2.7	2.7	2.7	2.7	2.7	2.7	2.7
	27	SHC	2.9	2.9	2.9	2.9	2.9	2.9	2.9	2.9	2.9	2.9	2.9	2.9	2.9	2.9	2.9
	29	SHC	3.2	3.2	3.2	3.2	3.2	3.2	3.2	3.2	3.2	3.2	3.2	3.2	3.2	3.2	3.2
18		TC	4.2	4.2	4.2	4.2	4.2	4.2	4.2	4.2	4.2	4.2	4.2	4.2	4.2	4.2	4.2
	21	SHC	2.1	2.1	2.1	2.1	2.1	2.1	2.1	2.1	2.1	2.1	2.1	2.1	2.1	2.1	2.1
	23	SHC	2.4	2.4	2.4	2.4	2.4	2.4	2.4	2.4	2.4	2.4	2.4	2.4	2.4	2.4	2.4
	25	SHC	2.6	2.6	2.6	2.6	2.6	2.6	2.6	2.6	2.6	2.6	2.6	2.6	2.6	2.6	2.6
	27	SHC	2.9	2.9	2.9	2.9	2.9	2.9	2.9	2.9	2.9	2.9	2.9	2.9	2.9	2.9	2.9
	29	SHC	3.2	3.2	3.2	3.2	3.2	3.2	3.2	3.2	3.2	3.2	3.2	3.2	3.2	3.2	3.2
	31	SHC	3.4	3.4	3.4	3.4	3.4	3.4	3.4	3.4	3.4	3.4	3.4	3.4	3.4	3.4	3.4
19		TC	4.5	4.5	4.5	4.5	4.5	4.5	4.5	4.5	4.5	4.5	4.5	4.5	4.5	4.5	4.5
	21	SHC	2.1	2.1	2.1	2.1	2.1	2.1	2.1	2.1	2.1	2.1	2.1	2.1	2.1	2.1	2.1
	23	SHC	2.3	2.3	2.3	2.3	2.3	2.3	2.3	2.3	2.3	2.3	2.3	2.3	2.3	2.3	2.3
	25	SHC	2.6	2.6	2.6	2.6	2.6	2.6	2.6	2.6	2.6	2.6	2.6	2.6	2.6	2.6	2.6
	27	SHC	2.8	2.8	2.8	2.8	2.8	2.8	2.8	2.8	2.8	2.8	2.8	2.8	2.8	2.8	2.8
	29	SHC	3.1	3.1	3.1	3.1	3.1	3.1	3.1	3.1	3.1	3.1	3.1	3.1	3.1	3.1	3.1
	31	SHC	3.4	3.4	3.4	3.4	3.4	3.4	3.4	3.4	3.4	3.4	3.4	3.4	3.4	3.4	3.4
20		TC	4.8	4.8	4.8	4.8	4.8	4.8	4.8	4.8	4.8	4.8	4.8	4.8	4.8	4.8	4.7
	23	SHC	2.3	2.3	2.3	2.3	2.3	2.3	2.3	2.3	2.3	2.3	2.3	2.3	2.3	2.3	2.2
	25	SHC	2.5	2.5	2.5	2.5	2.5	2.5	2.5	2.5	2.5	2.5	2.5	2.5	2.5	2.5	2.5
	27	SHC	2.8	2.8	2.8	2.8	2.8	2.8	2.8	2.8	2.8	2.8	2.8	2.8	2.8	2.8	2.7
	29	SHC	3.0	3.0	3.0	3.0	3.0	3.0	3.0	3.0	3.0	3.0	3.0	3.0	3.0	3.0	3.0
	31	SHC	3.3	3.3	3.3	3.3	3.3	3.3	3.3	3.3	3.3	3.3	3.3	3.3	3.3	3.3	3.3
21		TC	5.1	5.1	5.1	5.1	5.1	5.1	5.1	5.1	5.1	5.1	5.1	5.1	5.0	4.9	4.8
	23	SHC	2.2	2.2	2.2	2.2	2.2	2.2	2.2	2.2	2.2	2.2	2.2	2.2	2.2	2.1	2.1
	25	SHC	2.5	2.5	2.5	2.5	2.5	2.5	2.5	2.5	2.5	2.5	2.5	2.5	2.4	2.4	2.3
	27	SHC	2.7	2.7	2.7	2.7	2.7	2.7	2.7	2.7	2.7	2.7	2.7	2.7	2.7	2.6	2.6
	29	SHC	3.0	3.0	3.0	3.0	3.0	3.0	3.0	3.0	3.0	3.0	3.0	3.0	2.9	2.9	2.8
	31	SHC	3.2	3.2	3.2	3.2	3.2	3.2	3.2	3.2	3.2	3.2	3.2	3.2	3.2	3.1	3.1
22		TC	5.4	5.4	5.4	5.4	5.4	5.4	5.4	5.4	5.4	5.4	5.4	5.3	5.1	5.0	4.9
	25	SHC	2.4	2.4	2.4	2.4	2.4	2.4	2.4	2.4	2.4	2.4	2.4	2.3	2.3	2.2	2.1
	27	SHC	2.6	2.6	2.6	2.6	2.6	2.6	2.6	2.6	2.6	2.6	2.6	2.6	2.5	2.4	2.4
	29	SHC	2.9	2.9	2.9	2.9	2.9	2.9	2.9	2.9	2.9	2.9	2.9	2.8	2.8	2.7	2.7
	31	SHC	3.2	3.2	3.2	3.2	3.2	3.2	3.2	3.2	3.2	3.2	3.2	3.1	3.0	3.0	2.9
23		TC	5.7	5.7	5.7	5.7	5.7	5.7	5.7	5.7	5.7	5.7	5.5	5.4	5.2	5.1	5.0
	25	SHC	2.3	2.3	2.3	2.3	2.3	2.3	2.3	2.3	2.3	2.3	2.2	2.2	2.1	2.0	2.0
	27	SHC	2.6	2.6	2.6	2.6	2.6	2.6	2.6	2.6	2.6	2.6	2.5	2.4	2.3	2.3	2.2
	29	SHC	2.8	2.8	2.8	2.8	2.8	2.8	2.8	2.8	2.8	2.8	2.7	2.7	2.6	2.5	2.5
	31	SHC	3.1	3.1	3.1	3.1	3.1	3.1	3.1	3.1	3.1	3.1	3.0	2.9	2.9	2.8	2.8

3. Cooling Capacity of Indoor Unit

- S-56MF1E5

Power supply : 220/230/240V 1phase-50,60Hz TC : Total Cooling Capacity (kW) SHC : Sensible Heat Capacity (kW)

This data is when the indoor unit connects with 16HP outdoor unit.

RATING CAPACITY:		5.6 kW	AIR FLOW RATE: 12.0 m³/min														
EVAPORATOR			CONDENSER														
AIR INTAKE. TEMP			AMBIENT TEMP. (°C)														
W.B.	D.B.		15	17	19	21	23	25	27	29	31	33	35	37	39	41	43
14		TC	3.7	3.7	3.7	3.7	3.7	3.7	3.7	3.7	3.7	3.7	3.7	3.7	3.7	3.7	3.7
	21	SHC	2.7	2.7	2.7	2.7	2.7	2.7	2.7	2.7	2.7	2.7	2.7	2.7	2.7	2.7	2.7
	23	SHC	3.0	3.0	3.0	3.0	3.0	3.0	3.0	3.0	3.0	3.0	3.0	3.0	3.0	3.0	3.0
	25	SHC	3.3	3.3	3.3	3.3	3.3	3.3	3.3	3.3	3.3	3.3	3.3	3.3	3.3	3.3	3.3
	27	SHC	3.6	3.6	3.6	3.6	3.6	3.6	3.6	3.6	3.6	3.6	3.6	3.6	3.6	3.6	3.6
15		TC	4.1	4.1	4.1	4.1	4.1	4.1	4.1	4.1	4.1	4.1	4.1	4.1	4.1	4.1	4.1
	21	SHC	2.7	2.7	2.7	2.7	2.7	2.7	2.7	2.7	2.7	2.7	2.7	2.7	2.7	2.7	2.7
	23	SHC	3.0	3.0	3.0	3.0	3.0	3.0	3.0	3.0	3.0	3.0	3.0	3.0	3.0	3.0	3.0
	25	SHC	3.3	3.3	3.3	3.3	3.3	3.3	3.3	3.3	3.3	3.3	3.3	3.3	3.3	3.3	3.3
	27	SHC	3.6	3.6	3.6	3.6	3.6	3.6	3.6	3.6	3.6	3.6	3.6	3.6	3.6	3.6	3.6
16		TC	4.5	4.5	4.5	4.5	4.5	4.5	4.5	4.5	4.5	4.5	4.5	4.5	4.5	4.5	4.5
	21	SHC	2.7	2.7	2.7	2.7	2.7	2.7	2.7	2.7	2.7	2.7	2.7	2.7	2.7	2.7	2.7
	23	SHC	3.0	3.0	3.0	3.0	3.0	3.0	3.0	3.0	3.0	3.0	3.0	3.0	3.0	3.0	3.0
	25	SHC	3.3	3.3	3.3	3.3	3.3	3.3	3.3	3.3	3.3	3.3	3.3	3.3	3.3	3.3	3.3
	27	SHC	3.6	3.6	3.6	3.6	3.6	3.6	3.6	3.6	3.6	3.6	3.6	3.6	3.6	3.6	3.6
	29	SHC	3.8	3.8	3.8	3.8	3.8	3.8	3.8	3.8	3.8	3.8	3.8	3.8	3.8	3.8	3.8
17		TC	4.9	4.9	4.9	4.9	4.9	4.9	4.9	4.9	4.9	4.9	4.9	4.9	4.9	4.9	4.9
	21	SHC	2.7	2.7	2.7	2.7	2.7	2.7	2.7	2.7	2.7	2.7	2.7	2.7	2.7	2.7	2.7
	23	SHC	3.0	3.0	3.0	3.0	3.0	3.0	3.0	3.0	3.0	3.0	3.0	3.0	3.0	3.0	3.0
	25	SHC	3.3	3.3	3.3	3.3	3.3	3.3	3.3	3.3	3.3	3.3	3.3	3.3	3.3	3.3	3.3
	27	SHC	3.5	3.5	3.5	3.5	3.5	3.5	3.5	3.5	3.5	3.5	3.5	3.5	3.5	3.5	3.5
	29	SHC	3.8	3.8	3.8	3.8	3.8	3.8	3.8	3.8	3.8	3.8	3.8	3.8	3.8	3.8	3.8
18		TC	5.2	5.2	5.2	5.2	5.2	5.2	5.2	5.2	5.2	5.2	5.2	5.2	5.2	5.2	5.2
	21	SHC	2.7	2.7	2.7	2.7	2.7	2.7	2.7	2.7	2.7	2.7	2.7	2.7	2.7	2.7	2.7
	23	SHC	2.9	2.9	2.9	2.9	2.9	2.9	2.9	2.9	2.9	2.9	2.9	2.9	2.9	2.9	2.9
	25	SHC	3.2	3.2	3.2	3.2	3.2	3.2	3.2	3.2	3.2	3.2	3.2	3.2	3.2	3.2	3.2
	27	SHC	3.5	3.5	3.5	3.5	3.5	3.5	3.5	3.5	3.5	3.5	3.5	3.5	3.5	3.5	3.5
	29	SHC	3.8	3.8	3.8	3.8	3.8	3.8	3.8	3.8	3.8	3.8	3.8	3.8	3.8	3.8	3.8
	31	SHC	4.1	4.1	4.1	4.1	4.1	4.1	4.1	4.1	4.1	4.1	4.1	4.1	4.1	4.1	4.1
19		TC	5.6	5.6	5.6	5.6	5.6	5.6	5.6	5.6	5.6	5.6	5.6	5.6	5.6	5.6	5.6
	21	SHC	2.6	2.6	2.6	2.6	2.6	2.6	2.6	2.6	2.6	2.6	2.6	2.6	2.6	2.6	2.6
	23	SHC	2.9	2.9	2.9	2.9	2.9	2.9	2.9	2.9	2.9	2.9	2.9	2.9	2.9	2.9	2.9
	25	SHC	3.2	3.2	3.2	3.2	3.2	3.2	3.2	3.2	3.2	3.2	3.2	3.2	3.2	3.2	3.2
	27	SHC	3.5	3.5	3.5	3.5	3.5	3.5	3.5	3.5	3.5	3.5	3.5	3.5	3.5	3.5	3.5
	29	SHC	3.8	3.8	3.8	3.8	3.8	3.8	3.8	3.8	3.8	3.8	3.8	3.8	3.8	3.8	3.8
	31	SHC	4.0	4.0	4.0	4.0	4.0	4.0	4.0	4.0	4.0	4.0	4.0	4.0	4.0	4.0	4.0
20		TC	6.0	6.0	6.0	6.0	6.0	6.0	6.0	6.0	6.0	6.0	6.0	6.0	6.0	5.9	5.9
	23	SHC	2.9	2.9	2.9	2.9	2.9	2.9	2.9	2.9	2.9	2.9	2.9	2.9	2.9	2.8	2.8
	25	SHC	3.1	3.1	3.1	3.1	3.1	3.1	3.1	3.1	3.1	3.1	3.1	3.1	3.1	3.1	3.1
	27	SHC	3.4	3.4	3.4	3.4	3.4	3.4	3.4	3.4	3.4	3.4	3.4	3.4	3.4	3.4	3.4
	29	SHC	3.7	3.7	3.7	3.7	3.7	3.7	3.7	3.7	3.7	3.7	3.7	3.7	3.7	3.7	3.6
	31	SHC	4.0	4.0	4.0	4.0	4.0	4.0	4.0	4.0	4.0	4.0	4.0	4.0	4.0	4.0	3.9
21		TC	6.3	6.3	6.3	6.3	6.3	6.3	6.3	6.3	6.3	6.3	6.3	6.3	6.3	6.1	6.0
	23	SHC	2.8	2.8	2.8	2.8	2.8	2.8	2.8	2.8	2.8	2.8	2.8	2.8	2.8	2.7	2.6
	25	SHC	3.1	3.1	3.1	3.1	3.1	3.1	3.1	3.1	3.1	3.1	3.1	3.1	3.0	2.9	2.9
	27	SHC	3.4	3.4	3.4	3.4	3.4	3.4	3.4	3.4	3.4	3.4	3.4	3.4	3.3	3.2	3.2
	29	SHC	3.7	3.7	3.7	3.7	3.7	3.7	3.7	3.7	3.7	3.7	3.7	3.7	3.6	3.5	3.5
	31	SHC	3.9	3.9	3.9	3.9	3.9	3.9	3.9	3.9	3.9	3.9	3.9	3.9	3.9	3.8	3.7
22		TC	6.7	6.7	6.7	6.7	6.7	6.7	6.7	6.7	6.7	6.7	6.7	6.6	6.4	6.2	6.1
	25	SHC	3.0	3.0	3.0	3.0	3.0	3.0	3.0	3.0	3.0	3.0	3.0	2.9	2.8	2.7	2.7
	27	SHC	3.3	3.3	3.3	3.3	3.3	3.3	3.3	3.3	3.3	3.3	3.3	3.2	3.1	3.0	3.0
	29	SHC	3.6	3.6	3.6	3.6	3.6	3.6	3.6	3.6	3.6	3.6	3.6	3.5	3.4	3.3	3.3
	31	SHC	3.9	3.9	3.9	3.9	3.9	3.9	3.9	3.9	3.9	3.9	3.9	3.8	3.7	3.6	3.5
23		TC	7.1	7.1	7.1	7.1	7.1	7.1	7.1	7.1	7.1	7.1	6.9	6.7	6.5	6.3	6.2
	25	SHC	2.9	2.9	2.9	2.9	2.9	2.9	2.9	2.9	2.9	2.9	2.8	2.7	2.6	2.6	2.5
	27	SHC	3.2	3.2	3.2	3.2	3.2	3.2	3.2	3.2	3.2	3.2	3.1	3.0	2.9	2.8	2.8
	29	SHC	3.5	3.5	3.5	3.5	3.5	3.5	3.5	3.5	3.5	3.5	3.4	3.3	3.2	3.1	3.1
	31	SHC	3.8	3.8	3.8	3.8	3.8	3.8	3.8	3.8	3.8	3.8	3.7	3.6	3.5	3.4	3.4

3. Cooling Capacity of Indoor Unit

● S-73MF1E5

Power supply : 220/230/240V 1phase-50,60Hz TC : Total Cooling Capacity (kW) SHC : Sensible Heat Capacity (kW)

This data is when the indoor unit connects with 16HP outdoor unit.

RATING CAPACITY:		7.3 kW	AIR FLOW RATE: 18.0 m³/min														
EVAPORATOR			CONDENSER														
AIR INTAKE. TEMP			AMBIENT TEMP. (°C)														
W.B.	D.B.		15	17	19	21	23	25	27	29	31	33	35	37	39	41	43
14		TC	4.9	4.9	4.9	4.9	4.9	4.9	4.9	4.9	4.9	4.9	4.9	4.9	4.9	4.9	4.9
	21	SHC	3.9	3.9	3.9	3.9	3.9	3.9	3.9	3.9	3.9	3.9	3.9	3.9	3.9	3.9	3.9
	23	SHC	4.4	4.4	4.4	4.4	4.4	4.4	4.4	4.4	4.4	4.4	4.4	4.4	4.4	4.4	4.4
	25	SHC	4.9	4.9	4.9	4.9	4.9	4.9	4.9	4.9	4.9	4.9	4.9	4.9	4.9	4.9	4.9
	27	SHC	4.9	4.9	4.9	4.9	4.9	4.9	4.9	4.9	4.9	4.9	4.9	4.9	4.9	4.9	4.9
15		TC	5.4	5.4	5.4	5.4	5.4	5.4	5.4	5.4	5.4	5.4	5.4	5.4	5.4	5.4	5.4
	21	SHC	3.8	3.8	3.8	3.8	3.8	3.8	3.8	3.8	3.8	3.8	3.8	3.8	3.8	3.8	3.8
	23	SHC	4.3	4.3	4.3	4.3	4.3	4.3	4.3	4.3	4.3	4.3	4.3	4.3	4.3	4.3	4.3
	25	SHC	4.8	4.8	4.8	4.8	4.8	4.8	4.8	4.8	4.8	4.8	4.8	4.8	4.8	4.8	4.8
	27	SHC	5.3	5.3	5.3	5.3	5.3	5.3	5.3	5.3	5.3	5.3	5.3	5.3	5.3	5.3	5.3
16		TC	5.8	5.8	5.8	5.8	5.8	5.8	5.8	5.8	5.8	5.8	5.8	5.8	5.8	5.8	5.8
	21	SHC	3.7	3.7	3.7	3.7	3.7	3.7	3.7	3.7	3.7	3.7	3.7	3.7	3.7	3.7	3.7
	23	SHC	4.2	4.2	4.2	4.2	4.2	4.2	4.2	4.2	4.2	4.2	4.2	4.2	4.2	4.2	4.2
	25	SHC	4.7	4.7	4.7	4.7	4.7	4.7	4.7	4.7	4.7	4.7	4.7	4.7	4.7	4.7	4.7
	27	SHC	5.2	5.2	5.2	5.2	5.2	5.2	5.2	5.2	5.2	5.2	5.2	5.2	5.2	5.2	5.2
	29	SHC	5.7	5.7	5.7	5.7	5.7	5.7	5.7	5.7	5.7	5.7	5.7	5.7	5.7	5.7	5.7
17		TC	6.3	6.3	6.3	6.3	6.3	6.3	6.3	6.3	6.3	6.3	6.3	6.3	6.3	6.3	6.3
	21	SHC	3.6	3.6	3.6	3.6	3.6	3.6	3.6	3.6	3.6	3.6	3.6	3.6	3.6	3.6	3.6
	23	SHC	4.1	4.1	4.1	4.1	4.1	4.1	4.1	4.1	4.1	4.1	4.1	4.1	4.1	4.1	4.1
	25	SHC	4.6	4.6	4.6	4.6	4.6	4.6	4.6	4.6	4.6	4.6	4.6	4.6	4.6	4.6	4.6
	27	SHC	5.1	5.1	5.1	5.1	5.1	5.1	5.1	5.1	5.1	5.1	5.1	5.1	5.1	5.1	5.1
	29	SHC	5.6	5.6	5.6	5.6	5.6	5.6	5.6	5.6	5.6	5.6	5.6	5.6	5.6	5.6	5.6
18		TC	6.8	6.8	6.8	6.8	6.8	6.8	6.8	6.8	6.8	6.8	6.8	6.8	6.8	6.8	6.8
	21	SHC	3.5	3.5	3.5	3.5	3.5	3.5	3.5	3.5	3.5	3.5	3.5	3.5	3.5	3.5	3.5
	23	SHC	4.0	4.0	4.0	4.0	4.0	4.0	4.0	4.0	4.0	4.0	4.0	4.0	4.0	4.0	4.0
	25	SHC	4.5	4.5	4.5	4.5	4.5	4.5	4.5	4.5	4.5	4.5	4.5	4.5	4.5	4.5	4.5
	27	SHC	5.0	5.0	5.0	5.0	5.0	5.0	5.0	5.0	5.0	5.0	5.0	5.0	5.0	5.0	5.0
	29	SHC	5.5	5.5	5.5	5.5	5.5	5.5	5.5	5.5	5.5	5.5	5.5	5.5	5.5	5.5	5.5
	31	SHC	6.0	6.0	6.0	6.0	6.0	6.0	6.0	6.0	6.0	6.0	6.0	6.0	6.0	6.0	6.0
19		TC	7.3	7.3	7.3	7.3	7.3	7.3	7.3	7.3	7.3	7.3	7.3	7.3	7.3	7.3	7.3
	21	SHC	3.3	3.3	3.3	3.3	3.3	3.3	3.3	3.3	3.3	3.3	3.3	3.3	3.3	3.3	3.3
	23	SHC	3.8	3.8	3.8	3.8	3.8	3.8	3.8	3.8	3.8	3.8	3.8	3.8	3.8	3.8	3.8
	25	SHC	4.3	4.3	4.3	4.3	4.3	4.3	4.3	4.3	4.3	4.3	4.3	4.3	4.3	4.3	4.3
	27	SHC	4.8	4.8	4.8	4.8	4.8	4.8	4.8	4.8	4.8	4.8	4.8	4.8	4.8	4.8	4.8
	29	SHC	5.3	5.3	5.3	5.3	5.3	5.3	5.3	5.3	5.3	5.3	5.3	5.3	5.3	5.3	5.3
	31	SHC	5.8	5.8	5.8	5.8	5.8	5.8	5.8	5.8	5.8	5.8	5.8	5.8	5.8	5.8	5.8
20		TC	7.8	7.8	7.8	7.8	7.8	7.8	7.8	7.8	7.8	7.8	7.8	7.8	7.8	7.8	7.6
	23	SHC	3.7	3.7	3.7	3.7	3.7	3.7	3.7	3.7	3.7	3.7	3.7	3.7	3.7	3.6	3.6
	25	SHC	4.2	4.2	4.2	4.2	4.2	4.2	4.2	4.2	4.2	4.2	4.2	4.2	4.2	4.1	4.1
	27	SHC	4.7	4.7	4.7	4.7	4.7	4.7	4.7	4.7	4.7	4.7	4.7	4.7	4.7	4.7	4.6
	29	SHC	5.2	5.2	5.2	5.2	5.2	5.2	5.2	5.2	5.2	5.2	5.2	5.2	5.2	5.2	5.1
	31	SHC	5.7	5.7	5.7	5.7	5.7	5.7	5.7	5.7	5.7	5.7	5.7	5.7	5.7	5.7	5.6
21		TC	8.3	8.3	8.3	8.3	8.3	8.3	8.3	8.3	8.3	8.3	8.3	8.3	8.2	7.9	7.8
	23	SHC	3.5	3.5	3.5	3.5	3.5	3.5	3.5	3.5	3.5	3.5	3.5	3.5	3.4	3.3	3.3
	25	SHC	4.0	4.0	4.0	4.0	4.0	4.0	4.0	4.0	4.0	4.0	4.0	4.0	4.0	3.8	3.8
	27	SHC	4.5	4.5	4.5	4.5	4.5	4.5	4.5	4.5	4.5	4.5	4.5	4.5	4.5	4.4	4.3
	29	SHC	5.0	5.0	5.0	5.0	5.0	5.0	5.0	5.0	5.0	5.0	5.0	5.0	5.0	4.9	4.8
	31	SHC	5.5	5.5	5.5	5.5	5.5	5.5	5.5	5.5	5.5	5.5	5.5	5.5	5.5	5.4	5.3
22		TC	8.8	8.8	8.8	8.8	8.8	8.8	8.8	8.8	8.8	8.8	8.8	8.6	8.3	8.1	8.0
	25	SHC	3.8	3.8	3.8	3.8	3.8	3.8	3.8	3.8	3.8	3.8	3.8	3.7	3.6	3.5	3.5
	27	SHC	4.3	4.3	4.3	4.3	4.3	4.3	4.3	4.3	4.3	4.3	4.3	4.2	4.1	4.0	4.0
	29	SHC	4.8	4.8	4.8	4.8	4.8	4.8	4.8	4.8	4.8	4.8	4.8	4.7	4.6	4.5	4.5
	31	SHC	5.3	5.3	5.3	5.3	5.3	5.3	5.3	5.3	5.3	5.3	5.3	5.3	5.1	5.1	5.0
23		TC	9.2	9.2	9.2	9.2	9.2	9.2	9.2	9.2	9.2	9.2	9.0	8.7	8.5	8.2	8.1
	25	SHC	3.6	3.6	3.6	3.6	3.6	3.6	3.6	3.6	3.6	3.6	3.5	3.4	3.3	3.2	3.2
	27	SHC	4.1	4.1	4.1	4.1	4.1	4.1	4.1	4.1	4.1	4.1	4.0	3.9	3.8	3.7	3.7
	29	SHC	4.6	4.6	4.6	4.6	4.6	4.6	4.6	4.6	4.6	4.6	4.5	4.4	4.3	4.2	4.2
	31	SHC	5.2	5.2	5.2	5.2	5.2	5.2	5.2	5.2	5.2	5.2	5.0	4.9	4.8	4.7	4.7

3. Cooling Capacity of Indoor Unit

● S-90MF1E5

Power supply : 220/230/240V 1phase-50,60Hz TC : Total Cooling Capacity (kW) SHC : Sensible Heat Capacity (kW)

This data is when the indoor unit connects with 16HP outdoor unit.

RATING CAPACITY:		9.0 kW AIR FLOW RATE: 20.0 m³/min															
EVAPORATOR		CONDENSER															
AIR INTAKE. TEMP		AMBIENT TEMP. (°C)															
W.B.	D.B.		15	17	19	21	23	25	27	29	31	33	35	37	39	41	43
14		TC	6.0	6.0	6.0	6.0	6.0	6.0	6.0	6.0	6.0	6.0	6.0	6.0	6.0	6.0	6.0
	21	SHC	5.4	5.4	5.4	5.4	5.4	5.4	5.4	5.4	5.4	5.4	5.4	5.4	5.4	5.4	5.4
	23	SHC	6.0	6.0	6.0	6.0	6.0	6.0	6.0	6.0	6.0	6.0	6.0	6.0	6.0	6.0	6.0
	25	SHC	6.0	6.0	6.0	6.0	6.0	6.0	6.0	6.0	6.0	6.0	6.0	6.0	6.0	6.0	6.0
	27	SHC	6.0	6.0	6.0	6.0	6.0	6.0	6.0	6.0	6.0	6.0	6.0	6.0	6.0	6.0	6.0
15		TC	6.6	6.6	6.6	6.6	6.6	6.6	6.6	6.6	6.6	6.6	6.6	6.6	6.6	6.6	6.6
	21	SHC	5.1	5.1	5.1	5.1	5.1	5.1	5.1	5.1	5.1	5.1	5.1	5.1	5.1	5.1	5.1
	23	SHC	6.0	6.0	6.0	6.0	6.0	6.0	6.0	6.0	6.0	6.0	6.0	6.0	6.0	6.0	6.0
	25	SHC	6.6	6.6	6.6	6.6	6.6	6.6	6.6	6.6	6.6	6.6	6.6	6.6	6.6	6.6	6.6
	27	SHC	6.6	6.6	6.6	6.6	6.6	6.6	6.6	6.6	6.6	6.6	6.6	6.6	6.6	6.6	6.6
16		TC	7.2	7.2	7.2	7.2	7.2	7.2	7.2	7.2	7.2	7.2	7.2	7.2	7.2	7.2	7.2
	21	SHC	4.9	4.9	4.9	4.9	4.9	4.9	4.9	4.9	4.9	4.9	4.9	4.9	4.9	4.9	4.9
	23	SHC	5.7	5.7	5.7	5.7	5.7	5.7	5.7	5.7	5.7	5.7	5.7	5.7	5.7	5.7	5.7
	25	SHC	6.5	6.5	6.5	6.5	6.5	6.5	6.5	6.5	6.5	6.5	6.5	6.5	6.5	6.5	6.5
	27	SHC	7.2	7.2	7.2	7.2	7.2	7.2	7.2	7.2	7.2	7.2	7.2	7.2	7.2	7.2	7.2
	29	SHC	7.2	7.2	7.2	7.2	7.2	7.2	7.2	7.2	7.2	7.2	7.2	7.2	7.2	7.2	7.2
17		TC	7.8	7.8	7.8	7.8	7.8	7.8	7.8	7.8	7.8	7.8	7.8	7.8	7.8	7.8	7.8
	21	SHC	4.7	4.7	4.7	4.7	4.7	4.7	4.7	4.7	4.7	4.7	4.7	4.7	4.7	4.7	4.7
	23	SHC	5.5	5.5	5.5	5.5	5.5	5.5	5.5	5.5	5.5	5.5	5.5	5.5	5.5	5.5	5.5
	25	SHC	6.3	6.3	6.3	6.3	6.3	6.3	6.3	6.3	6.3	6.3	6.3	6.3	6.3	6.3	6.3
	27	SHC	7.1	7.1	7.1	7.1	7.1	7.1	7.1	7.1	7.1	7.1	7.1	7.1	7.1	7.1	7.1
	29	SHC	7.8	7.8	7.8	7.8	7.8	7.8	7.8	7.8	7.8	7.8	7.8	7.8	7.8	7.8	7.8
18		TC	8.4	8.4	8.4	8.4	8.4	8.4	8.4	8.4	8.4	8.4	8.4	8.4	8.4	8.4	8.4
	21	SHC	4.4	4.4	4.4	4.4	4.4	4.4	4.4	4.4	4.4	4.4	4.4	4.4	4.4	4.4	4.4
	23	SHC	5.2	5.2	5.2	5.2	5.2	5.2	5.2	5.2	5.2	5.2	5.2	5.2	5.2	5.2	5.2
	25	SHC	6.0	6.0	6.0	6.0	6.0	6.0	6.0	6.0	6.0	6.0	6.0	6.0	6.0	6.0	6.0
	27	SHC	6.8	6.8	6.8	6.8	6.8	6.8	6.8	6.8	6.8	6.8	6.8	6.8	6.8	6.8	6.8
	29	SHC	7.6	7.6	7.6	7.6	7.6	7.6	7.6	7.6	7.6	7.6	7.6	7.6	7.6	7.6	7.6
	31	SHC	8.4	8.4	8.4	8.4	8.4	8.4	8.4	8.4	8.4	8.4	8.4	8.4	8.4	8.4	8.4
19		TC	9.0	9.0	9.0	9.0	9.0	9.0	9.0	9.0	9.0	9.0	9.0	9.0	9.0	9.0	9.0
	21	SHC	4.1	4.1	4.1	4.1	4.1	4.1	4.1	4.1	4.1	4.1	4.1	4.1	4.1	4.1	4.1
	23	SHC	4.9	4.9	4.9	4.9	4.9	4.9	4.9	4.9	4.9	4.9	4.9	4.9	4.9	4.9	4.9
	25	SHC	5.7	5.7	5.7	5.7	5.7	5.7	5.7	5.7	5.7	5.7	5.7	5.7	5.7	5.7	5.7
	27	SHC	6.5	6.5	6.5	6.5	6.5	6.5	6.5	6.5	6.5	6.5	6.5	6.5	6.5	6.5	6.5
	29	SHC	7.4	7.4	7.4	7.4	7.4	7.4	7.4	7.4	7.4	7.4	7.4	7.4	7.4	7.4	7.4
	31	SHC	8.2	8.2	8.2	8.2	8.2	8.2	8.2	8.2	8.2	8.2	8.2	8.2	8.2	8.2	8.2
20		TC	9.6	9.6	9.6	9.6	9.6	9.6	9.6	9.6	9.6	9.6	9.6	9.6	9.6	9.6	9.4
	23	SHC	4.6	4.6	4.6	4.6	4.6	4.6	4.6	4.6	4.6	4.6	4.6	4.6	4.6	4.6	4.5
	25	SHC	5.4	5.4	5.4	5.4	5.4	5.4	5.4	5.4	5.4	5.4	5.4	5.4	5.4	5.4	5.3
	27	SHC	6.2	6.2	6.2	6.2	6.2	6.2	6.2	6.2	6.2	6.2	6.2	6.2	6.2	6.2	6.2
	29	SHC	7.1	7.1	7.1	7.1	7.1	7.1	7.1	7.1	7.1	7.1	7.1	7.1	7.1	7.0	7.0
	31	SHC	7.9	7.9	7.9	7.9	7.9	7.9	7.9	7.9	7.9	7.9	7.9	7.9	7.9	7.8	7.8
21		TC	10.2	10.2	10.2	10.2	10.2	10.2	10.2	10.2	10.2	10.2	10.2	10.2	10.1	9.8	9.6
	23	SHC	4.3	4.3	4.3	4.3	4.3	4.3	4.3	4.3	4.3	4.3	4.3	4.3	4.2	4.1	4.1
	25	SHC	5.1	5.1	5.1	5.1	5.1	5.1	5.1	5.1	5.1	5.1	5.1	5.1	5.1	4.9	4.9
	27	SHC	5.9	5.9	5.9	5.9	5.9	5.9	5.9	5.9	5.9	5.9	5.9	5.9	5.9	5.8	5.7
	29	SHC	6.7	6.7	6.7	6.7	6.7	6.7	6.7	6.7	6.7	6.7	6.7	6.7	6.7	6.6	6.5
	31	SHC	7.6	7.6	7.6	7.6	7.6	7.6	7.6	7.6	7.6	7.6	7.6	7.6	7.5	7.4	7.3
22		TC	10.8	10.8	10.8	10.8	10.8	10.8	10.8	10.8	10.8	10.8	10.8	10.6	10.3	10.0	9.8
	25	SHC	4.8	4.8	4.8	4.8	4.8	4.8	4.8	4.8	4.8	4.8	4.8	4.7	4.6	4.5	4.4
	27	SHC	5.6	5.6	5.6	5.6	5.6	5.6	5.6	5.6	5.6	5.6	5.6	5.5	5.4	5.3	5.2
	29	SHC	6.4	6.4	6.4	6.4	6.4	6.4	6.4	6.4	6.4	6.4	6.4	6.3	6.2	6.1	6.0
	31	SHC	7.2	7.2	7.2	7.2	7.2	7.2	7.2	7.2	7.2	7.2	7.2	7.1	7.0	6.9	6.9
23		TC	11.4	11.4	11.4	11.4	11.4	11.4	11.4	11.4	11.4	11.4	11.1	10.8	10.5	10.2	10.0
	25	SHC	4.5	4.5	4.5	4.5	4.5	4.5	4.5	4.5	4.5	4.5	4.3	4.2	4.1	4.0	3.9
	27	SHC	5.3	5.3	5.3	5.3	5.3	5.3	5.3	5.3	5.3	5.3	5.1	5.0	4.9	4.8	4.8
	29	SHC	6.1	6.1	6.1	6.1	6.1	6.1	6.1	6.1	6.1	6.1	6.0	5.8	5.7	5.6	5.6
	31	SHC	6.9	6.9	6.9	6.9	6.9	6.9	6.9	6.9	6.9	6.9	6.8	6.7	6.6	6.4	6.4

3. Cooling Capacity of Indoor Unit

● S-106MF1E5

Power supply : 220/230/240V 1phase-50,60Hz TC : Total Cooling Capacity (kW) SHC : Sensible Heat Capacity (kW)

This data is when the indoor unit connects with 16HP outdoor unit.

RATING CAPACITY:		10.6 kW	AIR FLOW RATE: 30.0 m³/min														
EVAPORATOR			CONDENSER														
AIR INTAKE. TEMP			AMBIENT TEMP. (°C)														
W.B.	D.B.		15	17	19	21	23	25	27	29	31	33	35	37	39	41	43
14		TC	7.1	7.1	7.1	7.1	7.1	7.1	7.1	7.1	7.1	7.1	7.1	7.1	7.1	7.1	7.1
	21	SHC	6.3	6.3	6.3	6.3	6.3	6.3	6.3	6.3	6.3	6.3	6.3	6.3	6.3	6.3	6.3
	23	SHC	7.1	7.1	7.1	7.1	7.1	7.1	7.1	7.1	7.1	7.1	7.1	7.1	7.1	7.1	7.1
	25	SHC	7.1	7.1	7.1	7.1	7.1	7.1	7.1	7.1	7.1	7.1	7.1	7.1	7.1	7.1	7.1
	27	SHC	7.1	7.1	7.1	7.1	7.1	7.1	7.1	7.1	7.1	7.1	7.1	7.1	7.1	7.1	7.1
15		TC	7.8	7.8	7.8	7.8	7.8	7.8	7.8	7.8	7.8	7.8	7.8	7.8	7.8	7.8	7.8
	21	SHC	6.0	6.0	6.0	6.0	6.0	6.0	6.0	6.0	6.0	6.0	6.0	6.0	6.0	6.0	6.0
	23	SHC	7.0	7.0	7.0	7.0	7.0	7.0	7.0	7.0	7.0	7.0	7.0	7.0	7.0	7.0	7.0
	25	SHC	7.8	7.8	7.8	7.8	7.8	7.8	7.8	7.8	7.8	7.8	7.8	7.8	7.8	7.8	7.8
	27	SHC	7.8	7.8	7.8	7.8	7.8	7.8	7.8	7.8	7.8	7.8	7.8	7.8	7.8	7.8	7.8
16		TC	8.5	8.5	8.5	8.5	8.5	8.5	8.5	8.5	8.5	8.5	8.5	8.5	8.5	8.5	8.5
	21	SHC	5.8	5.8	5.8	5.8	5.8	5.8	5.8	5.8	5.8	5.8	5.8	5.8	5.8	5.8	5.8
	23	SHC	6.7	6.7	6.7	6.7	6.7	6.7	6.7	6.7	6.7	6.7	6.7	6.7	6.7	6.7	6.7
	25	SHC	7.6	7.6	7.6	7.6	7.6	7.6	7.6	7.6	7.6	7.6	7.6	7.6	7.6	7.6	7.6
	27	SHC	8.5	8.5	8.5	8.5	8.5	8.5	8.5	8.5	8.5	8.5	8.5	8.5	8.5	8.5	8.5
	29	SHC	8.5	8.5	8.5	8.5	8.5	8.5	8.5	8.5	8.5	8.5	8.5	8.5	8.5	8.5	8.5
17		TC	9.2	9.2	9.2	9.2	9.2	9.2	9.2	9.2	9.2	9.2	9.2	9.2	9.2	9.2	9.2
	21	SHC	5.5	5.5	5.5	5.5	5.5	5.5	5.5	5.5	5.5	5.5	5.5	5.5	5.5	5.5	5.5
	23	SHC	6.4	6.4	6.4	6.4	6.4	6.4	6.4	6.4	6.4	6.4	6.4	6.4	6.4	6.4	6.4
	25	SHC	7.3	7.3	7.3	7.3	7.3	7.3	7.3	7.3	7.3	7.3	7.3	7.3	7.3	7.3	7.3
	27	SHC	8.3	8.3	8.3	8.3	8.3	8.3	8.3	8.3	8.3	8.3	8.3	8.3	8.3	8.3	8.3
	29	SHC	9.2	9.2	9.2	9.2	9.2	9.2	9.2	9.2	9.2	9.2	9.2	9.2	9.2	9.2	9.2
18		TC	9.9	9.9	9.9	9.9	9.9	9.9	9.9	9.9	9.9	9.9	9.9	9.9	9.9	9.9	9.9
	21	SHC	5.2	5.2	5.2	5.2	5.2	5.2	5.2	5.2	5.2	5.2	5.2	5.2	5.2	5.2	5.2
	23	SHC	6.1	6.1	6.1	6.1	6.1	6.1	6.1	6.1	6.1	6.1	6.1	6.1	6.1	6.1	6.1
	25	SHC	7.0	7.0	7.0	7.0	7.0	7.0	7.0	7.0	7.0	7.0	7.0	7.0	7.0	7.0	7.0
	27	SHC	8.0	8.0	8.0	8.0	8.0	8.0	8.0	8.0	8.0	8.0	8.0	8.0	8.0	8.0	8.0
	29	SHC	8.9	8.9	8.9	8.9	8.9	8.9	8.9	8.9	8.9	8.9	8.9	8.9	8.9	8.9	8.9
	31	SHC	9.9	9.9	9.9	9.9	9.9	9.9	9.9	9.9	9.9	9.9	9.9	9.9	9.9	9.9	9.9
19		TC	10.6	10.6	10.6	10.6	10.6	10.6	10.6	10.6	10.6	10.6	10.6	10.6	10.6	10.6	10.6
	21	SHC	4.8	4.8	4.8	4.8	4.8	4.8	4.8	4.8	4.8	4.8	4.8	4.8	4.8	4.8	4.8
	23	SHC	5.8	5.8	5.8	5.8	5.8	5.8	5.8	5.8	5.8	5.8	5.8	5.8	5.8	5.8	5.8
	25	SHC	6.7	6.7	6.7	6.7	6.7	6.7	6.7	6.7	6.7	6.7	6.7	6.7	6.7	6.7	6.7
	27	SHC	7.6	7.6	7.6	7.6	7.6	7.6	7.6	7.6	7.6	7.6	7.6	7.6	7.6	7.6	7.6
	29	SHC	8.6	8.6	8.6	8.6	8.6	8.6	8.6	8.6	8.6	8.6	8.6	8.6	8.6	8.6	8.6
	31	SHC	9.5	9.5	9.5	9.5	9.5	9.5	9.5	9.5	9.5	9.5	9.5	9.5	9.5	9.5	9.5
20		TC	11.3	11.3	11.3	11.3	11.3	11.3	11.3	11.3	11.3	11.3	11.3	11.3	11.3	11.3	11.1
	23	SHC	5.4	5.4	5.4	5.4	5.4	5.4	5.4	5.4	5.4	5.4	5.4	5.4	5.4	5.4	5.3
	25	SHC	6.4	6.4	6.4	6.4	6.4	6.4	6.4	6.4	6.4	6.4	6.4	6.4	6.4	6.3	6.3
	27	SHC	7.3	7.3	7.3	7.3	7.3	7.3	7.3	7.3	7.3	7.3	7.3	7.3	7.3	7.3	7.2
	29	SHC	8.3	8.3	8.3	8.3	8.3	8.3	8.3	8.3	8.3	8.3	8.3	8.3	8.3	8.2	8.2
	31	SHC	9.2	9.2	9.2	9.2	9.2	9.2	9.2	9.2	9.2	9.2	9.2	9.2	9.2	9.2	9.1
21		TC	12.0	12.0	12.0	12.0	12.0	12.0	12.0	12.0	12.0	12.0	12.0	12.0	11.8	11.5	11.3
	23	SHC	5.1	5.1	5.1	5.1	5.1	5.1	5.1	5.1	5.1	5.1	5.1	5.1	5.0	4.9	4.8
	25	SHC	6.0	6.0	6.0	6.0	6.0	6.0	6.0	6.0	6.0	6.0	6.0	6.0	5.9	5.8	5.7
	27	SHC	7.0	7.0	7.0	7.0	7.0	7.0	7.0	7.0	7.0	7.0	7.0	7.0	6.9	6.7	6.7
	29	SHC	7.9	7.9	7.9	7.9	7.9	7.9	7.9	7.9	7.9	7.9	7.9	7.9	7.8	7.7	7.6
	31	SHC	8.8	8.8	8.8	8.8	8.8	8.8	8.8	8.8	8.8	8.8	8.8	8.8	8.8	8.6	8.6
22		TC	12.7	12.7	12.7	12.7	12.7	12.7	12.7	12.7	12.7	12.7	12.7	12.4	12.1	11.7	11.6
	25	SHC	5.6	5.6	5.6	5.6	5.6	5.6	5.6	5.6	5.6	5.6	5.6	5.5	5.4	5.3	5.2
	27	SHC	6.6	6.6	6.6	6.6	6.6	6.6	6.6	6.6	6.6	6.6	6.6	6.5	6.3	6.2	6.1
	29	SHC	7.5	7.5	7.5	7.5	7.5	7.5	7.5	7.5	7.5	7.5	7.5	7.4	7.3	7.1	7.1
	31	SHC	8.5	8.5	8.5	8.5	8.5	8.5	8.5	8.5	8.5	8.5	8.5	8.4	8.2	8.1	8.0
23		TC	13.4	13.4	13.4	13.4	13.4	13.4	13.4	13.4	13.4	13.4	13.1	12.7	12.3	12.0	11.8
	25	SHC	5.2	5.2	5.2	5.2	5.2	5.2	5.2	5.2	5.2	5.2	5.1	5.0	4.8	4.7	4.6
	27	SHC	6.2	6.2	6.2	6.2	6.2	6.2	6.2	6.2	6.2	6.2	6.0	5.9	5.8	5.7	5.6
	29	SHC	7.1	7.1	7.1	7.1	7.1	7.1	7.1	7.1	7.1	7.1	7.0	6.9	6.7	6.6	6.5
	31	SHC	8.1	8.1	8.1	8.1	8.1	8.1	8.1	8.1	8.1	8.1	7.9	7.8	7.7	7.5	7.5

3. Cooling Capacity of Indoor Unit

● S-140MF1E5

Power supply : 220/230/240V 1phase-50,60Hz TC : Total Cooling Capacity (kW) SHC : Sensible Heat Capacity (kW)

This data is when the indoor unit connects with 16HP outdoor unit.

RATING CAPACITY:		14.0 kW	AIR FLOW RATE: 33.0 m³/min														
EVAPORATOR			CONDENSER														
AIR INTAKE. TEMP			AMBIENT TEMP. (°C)														
W.B.	D.B.		15	17	19	21	23	25	27	29	31	33	35	37	39	41	43
14		TC	9.3	9.3	9.3	9.3	9.3	9.3	9.3	9.3	9.3	9.3	9.3	9.3	9.3	9.3	9.3
	21	SHC	7.6	7.6	7.6	7.6	7.6	7.6	7.6	7.6	7.6	7.6	7.6	7.6	7.6	7.6	7.6
	23	SHC	8.6	8.6	8.6	8.6	8.6	8.6	8.6	8.6	8.6	8.6	8.6	8.6	8.6	8.6	8.6
	25	SHC	9.3	9.3	9.3	9.3	9.3	9.3	9.3	9.3	9.3	9.3	9.3	9.3	9.3	9.3	9.3
	27	SHC	9.3	9.3	9.3	9.3	9.3	9.3	9.3	9.3	9.3	9.3	9.3	9.3	9.3	9.3	9.3
15		TC	10.3	10.3	10.3	10.3	10.3	10.3	10.3	10.3	10.3	10.3	10.3	10.3	10.3	10.3	10.3
	21	SHC	7.4	7.4	7.4	7.4	7.4	7.4	7.4	7.4	7.4	7.4	7.4	7.4	7.4	7.4	7.4
	23	SHC	8.4	8.4	8.4	8.4	8.4	8.4	8.4	8.4	8.4	8.4	8.4	8.4	8.4	8.4	8.4
	25	SHC	9.3	9.3	9.3	9.3	9.3	9.3	9.3	9.3	9.3	9.3	9.3	9.3	9.3	9.3	9.3
	27	SHC	10.3	10.3	10.3	10.3	10.3	10.3	10.3	10.3	10.3	10.3	10.3	10.3	10.3	10.3	10.3
16		TC	11.2	11.2	11.2	11.2	11.2	11.2	11.2	11.2	11.2	11.2	11.2	11.2	11.2	11.2	11.2
	21	SHC	7.1	7.1	7.1	7.1	7.1	7.1	7.1	7.1	7.1	7.1	7.1	7.1	7.1	7.1	7.1
	23	SHC	8.1	8.1	8.1	8.1	8.1	8.1	8.1	8.1	8.1	8.1	8.1	8.1	8.1	8.1	8.1
	25	SHC	9.1	9.1	9.1	9.1	9.1	9.1	9.1	9.1	9.1	9.1	9.1	9.1	9.1	9.1	9.1
	27	SHC	10.1	10.1	10.1	10.1	10.1	10.1	10.1	10.1	10.1	10.1	10.1	10.1	10.1	10.1	10.1
	29	SHC	11.1	11.1	11.1	11.1	11.1	11.1	11.1	11.1	11.1	11.1	11.1	11.1	11.1	11.1	11.1
17		TC	12.1	12.1	12.1	12.1	12.1	12.1	12.1	12.1	12.1	12.1	12.1	12.1	12.1	12.1	12.1
	21	SHC	6.9	6.9	6.9	6.9	6.9	6.9	6.9	6.9	6.9	6.9	6.9	6.9	6.9	6.9	6.9
	23	SHC	7.9	7.9	7.9	7.9	7.9	7.9	7.9	7.9	7.9	7.9	7.9	7.9	7.9	7.9	7.9
	25	SHC	8.9	8.9	8.9	8.9	8.9	8.9	8.9	8.9	8.9	8.9	8.9	8.9	8.9	8.9	8.9
	27	SHC	9.9	9.9	9.9	9.9	9.9	9.9	9.9	9.9	9.9	9.9	9.9	9.9	9.9	9.9	9.9
	29	SHC	10.9	10.9	10.9	10.9	10.9	10.9	10.9	10.9	10.9	10.9	10.9	10.9	10.9	10.9	10.9
18		TC	13.1	13.1	13.1	13.1	13.1	13.1	13.1	13.1	13.1	13.1	13.1	13.1	13.1	13.1	13.1
	21	SHC	6.6	6.6	6.6	6.6	6.6	6.6	6.6	6.6	6.6	6.6	6.6	6.6	6.6	6.6	6.6
	23	SHC	7.6	7.6	7.6	7.6	7.6	7.6	7.6	7.6	7.6	7.6	7.6	7.6	7.6	7.6	7.6
	25	SHC	8.6	8.6	8.6	8.6	8.6	8.6	8.6	8.6	8.6	8.6	8.6	8.6	8.6	8.6	8.6
	27	SHC	9.6	9.6	9.6	9.6	9.6	9.6	9.6	9.6	9.6	9.6	9.6	9.6	9.6	9.6	9.6
	29	SHC	10.6	10.6	10.6	10.6	10.6	10.6	10.6	10.6	10.6	10.6	10.6	10.6	10.6	10.6	10.6
	31	SHC	11.6	11.6	11.6	11.6	11.6	11.6	11.6	11.6	11.6	11.6	11.6	11.6	11.6	11.6	11.6
19		TC	14.0	14.0	14.0	14.0	14.0	14.0	14.0	14.0	14.0	14.0	14.0	14.0	14.0	14.0	14.0
	21	SHC	6.4	6.4	6.4	6.4	6.4	6.4	6.4	6.4	6.4	6.4	6.4	6.4	6.4	6.4	6.4
	23	SHC	7.3	7.3	7.3	7.3	7.3	7.3	7.3	7.3	7.3	7.3	7.3	7.3	7.3	7.3	7.3
	25	SHC	8.3	8.3	8.3	8.3	8.3	8.3	8.3	8.3	8.3	8.3	8.3	8.3	8.3	8.3	8.3
	27	SHC	9.3	9.3	9.3	9.3	9.3	9.3	9.3	9.3	9.3	9.3	9.3	9.3	9.3	9.3	9.3
	29	SHC	10.3	10.3	10.3	10.3	10.3	10.3	10.3	10.3	10.3	10.3	10.3	10.3	10.3	10.3	10.3
	31	SHC	11.3	11.3	11.3	11.3	11.3	11.3	11.3	11.3	11.3	11.3	11.3	11.3	11.3	11.3	11.3
20		TC	14.9	14.9	14.9	14.9	14.9	14.9	14.9	14.9	14.9	14.9	14.9	14.9	14.9	14.9	14.6
	23	SHC	7.0	7.0	7.0	7.0	7.0	7.0	7.0	7.0	7.0	7.0	7.0	7.0	7.0	7.0	6.9
	25	SHC	8.0	8.0	8.0	8.0	8.0	8.0	8.0	8.0	8.0	8.0	8.0	8.0	8.0	8.0	7.9
	27	SHC	9.0	9.0	9.0	9.0	9.0	9.0	9.0	9.0	9.0	9.0	9.0	9.0	9.0	9.0	8.9
	29	SHC	10.0	10.0	10.0	10.0	10.0	10.0	10.0	10.0	10.0	10.0	10.0	10.0	10.0	10.0	9.9
	31	SHC	11.0	11.0	11.0	11.0	11.0	11.0	11.0	11.0	11.0	11.0	11.0	11.0	11.0	11.0	10.9
21		TC	15.9	15.9	15.9	15.9	15.9	15.9	15.9	15.9	15.9	15.9	15.9	15.9	15.6	15.2	15.0
	23	SHC	6.7	6.7	6.7	6.7	6.7	6.7	6.7	6.7	6.7	6.7	6.7	6.7	6.6	6.4	6.3
	25	SHC	7.7	7.7	7.7	7.7	7.7	7.7	7.7	7.7	7.7	7.7	7.7	7.7	7.6	7.4	7.3
	27	SHC	8.7	8.7	8.7	8.7	8.7	8.7	8.7	8.7	8.7	8.7	8.7	8.7	8.6	8.4	8.3
	29	SHC	9.7	9.7	9.7	9.7	9.7	9.7	9.7	9.7	9.7	9.7	9.7	9.7	9.6	9.4	9.3
	31	SHC	10.7	10.7	10.7	10.7	10.7	10.7	10.7	10.7	10.7	10.7	10.7	10.7	10.6	10.4	10.3
22		TC	16.8	16.8	16.8	16.8	16.8	16.8	16.8	16.8	16.8	16.8	16.8	16.4	15.9	15.5	15.3
	25	SHC	7.3	7.3	7.3	7.3	7.3	7.3	7.3	7.3	7.3	7.3	7.3	7.2	7.0	6.8	6.7
	27	SHC	8.3	8.3	8.3	8.3	8.3	8.3	8.3	8.3	8.3	8.3	8.3	8.2	8.0	7.8	7.7
	29	SHC	9.3	9.3	9.3	9.3	9.3	9.3	9.3	9.3	9.3	9.3	9.3	9.2	9.0	8.8	8.7
	31	SHC	10.3	10.3	10.3	10.3	10.3	10.3	10.3	10.3	10.3	10.3	10.3	10.2	10.0	9.8	9.7
23		TC	17.7	17.7	17.7	17.7	17.7	17.7	17.7	17.7	17.7	17.7	17.2	16.7	16.3	15.8	15.6
	25	SHC	7.0	7.0	7.0	7.0	7.0	7.0	7.0	7.0	7.0	7.0	6.7	6.5	6.3	6.2	6.1
	27	SHC	8.0	8.0	8.0	8.0	8.0	8.0	8.0	8.0	8.0	8.0	7.7	7.5	7.4	7.2	7.1
	29	SHC	9.0	9.0	9.0	9.0	9.0	9.0	9.0	9.0	9.0	9.0	8.8	8.5	8.4	8.2	8.1
	31	SHC	10.0	10.0	10.0	10.0	10.0	10.0	10.0	10.0	10.0	10.0	9.8	9.6	9.4	9.2	9.1

3. Cooling Capacity of Indoor Unit

- S-160MF1E5

Power supply : 220/230/240V 1phase-50,60Hz TC : Total Cooling Capacity (kW) SHC : Sensible Heat Capacity (kW)

This data is when the indoor unit connects with 16HP outdoor unit.

RATING CAPACITY:		16.0 kW	AIR FLOW RATE: 33.0 m³/min														
EVAPORATOR			CONDENSER														
AIR INTAKE. TEMP			AMBIENT TEMP. (°C)														
W.B.	D.B.		15	17	19	21	23	25	27	29	31	33	35	37	39	41	43
14		TC	10.7	10.7	10.7	10.7	10.7	10.7	10.7	10.7	10.7	10.7	10.7	10.7	10.7	10.7	10.7
	21	SHC	9.3	9.3	9.3	9.3	9.3	9.3	9.3	9.3	9.3	9.3	9.3	9.3	9.3	9.3	9.3
	23	SHC	10.7	10.7	10.7	10.7	10.7	10.7	10.7	10.7	10.7	10.7	10.7	10.7	10.7	10.7	10.7
	25	SHC	10.7	10.7	10.7	10.7	10.7	10.7	10.7	10.7	10.7	10.7	10.7	10.7	10.7	10.7	10.7
	27	SHC	10.7	10.7	10.7	10.7	10.7	10.7	10.7	10.7	10.7	10.7	10.7	10.7	10.7	10.7	10.7
15		TC	11.7	11.7	11.7	11.7	11.7	11.7	11.7	11.7	11.7	11.7	11.7	11.7	11.7	11.7	11.7
	21	SHC	8.9	8.9	8.9	8.9	8.9	8.9	8.9	8.9	8.9	8.9	8.9	8.9	8.9	8.9	8.9
	23	SHC	10.3	10.3	10.3	10.3	10.3	10.3	10.3	10.3	10.3	10.3	10.3	10.3	10.3	10.3	10.3
	25	SHC	11.7	11.7	11.7	11.7	11.7	11.7	11.7	11.7	11.7	11.7	11.7	11.7	11.7	11.7	11.7
	27	SHC	11.7	11.7	11.7	11.7	11.7	11.7	11.7	11.7	11.7	11.7	11.7	11.7	11.7	11.7	11.7
16		TC	12.8	12.8	12.8	12.8	12.8	12.8	12.8	12.8	12.8	12.8	12.8	12.8	12.8	12.8	12.8
	21	SHC	8.6	8.6	8.6	8.6	8.6	8.6	8.6	8.6	8.6	8.6	8.6	8.6	8.6	8.6	8.6
	23	SHC	9.9	9.9	9.9	9.9	9.9	9.9	9.9	9.9	9.9	9.9	9.9	9.9	9.9	9.9	9.9
	25	SHC	11.3	11.3	11.3	11.3	11.3	11.3	11.3	11.3	11.3	11.3	11.3	11.3	11.3	11.3	11.3
	27	SHC	12.6	12.6	12.6	12.6	12.6	12.6	12.6	12.6	12.6	12.6	12.6	12.6	12.6	12.6	12.6
	29	SHC	12.8	12.8	12.8	12.8	12.8	12.8	12.8	12.8	12.8	12.8	12.8	12.8	12.8	12.8	12.8
17		TC	13.9	13.9	13.9	13.9	13.9	13.9	13.9	13.9	13.9	13.9	13.9	13.9	13.9	13.9	13.9
	21	SHC	8.2	8.2	8.2	8.2	8.2	8.2	8.2	8.2	8.2	8.2	8.2	8.2	8.2	8.2	8.2
	23	SHC	9.5	9.5	9.5	9.5	9.5	9.5	9.5	9.5	9.5	9.5	9.5	9.5	9.5	9.5	9.5
	25	SHC	10.9	10.9	10.9	10.9	10.9	10.9	10.9	10.9	10.9	10.9	10.9	10.9	10.9	10.9	10.9
	27	SHC	12.2	12.2	12.2	12.2	12.2	12.2	12.2	12.2	12.2	12.2	12.2	12.2	12.2	12.2	12.2
	29	SHC	13.6	13.6	13.6	13.6	13.6	13.6	13.6	13.6	13.6	13.6	13.6	13.6	13.6	13.6	13.6
18		TC	14.9	14.9	14.9	14.9	14.9	14.9	14.9	14.9	14.9	14.9	14.9	14.9	14.9	14.9	14.9
	21	SHC	7.7	7.7	7.7	7.7	7.7	7.7	7.7	7.7	7.7	7.7	7.7	7.7	7.7	7.7	7.7
	23	SHC	9.1	9.1	9.1	9.1	9.1	9.1	9.1	9.1	9.1	9.1	9.1	9.1	9.1	9.1	9.1
	25	SHC	10.4	10.4	10.4	10.4	10.4	10.4	10.4	10.4	10.4	10.4	10.4	10.4	10.4	10.4	10.4
	27	SHC	11.8	11.8	11.8	11.8	11.8	11.8	11.8	11.8	11.8	11.8	11.8	11.8	11.8	11.8	11.8
	29	SHC	13.2	13.2	13.2	13.2	13.2	13.2	13.2	13.2	13.2	13.2	13.2	13.2	13.2	13.2	13.2
	31	SHC	14.5	14.5	14.5	14.5	14.5	14.5	14.5	14.5	14.5	14.5	14.5	14.5	14.5	14.5	14.5
19		TC	16.0	16.0	16.0	16.0	16.0	16.0	16.0	16.0	16.0	16.0	16.0	16.0	16.0	16.0	16.0
	21	SHC	7.3	7.3	7.3	7.3	7.3	7.3	7.3	7.3	7.3	7.3	7.3	7.3	7.3	7.3	7.3
	23	SHC	8.6	8.6	8.6	8.6	8.6	8.6	8.6	8.6	8.6	8.6	8.6	8.6	8.6	8.6	8.6
	25	SHC	10.0	10.0	10.0	10.0	10.0	10.0	10.0	10.0	10.0	10.0	10.0	10.0	10.0	10.0	10.0
	27	SHC	11.3	11.3	11.3	11.3	11.3	11.3	11.3	11.3	11.3	11.3	11.3	11.3	11.3	11.3	11.3
	29	SHC	12.7	12.7	12.7	12.7	12.7	12.7	12.7	12.7	12.7	12.7	12.7	12.7	12.7	12.7	12.7
	31	SHC	14.1	14.1	14.1	14.1	14.1	14.1	14.1	14.1	14.1	14.1	14.1	14.1	14.1	14.1	14.1
20		TC	17.1	17.1	17.1	17.1	17.1	17.1	17.1	17.1	17.1	17.1	17.1	17.1	17.1	17.0	16.7
	23	SHC	8.1	8.1	8.1	8.1	8.1	8.1	8.1	8.1	8.1	8.1	8.1	8.1	8.1	8.1	8.0
	25	SHC	9.5	9.5	9.5	9.5	9.5	9.5	9.5	9.5	9.5	9.5	9.5	9.5	9.5	9.5	9.4
	27	SHC	10.9	10.9	10.9	10.9	10.9	10.9	10.9	10.9	10.9	10.9	10.9	10.9	10.9	10.8	10.7
	29	SHC	12.2	12.2	12.2	12.2	12.2	12.2	12.2	12.2	12.2	12.2	12.2	12.2	12.2	12.2	12.1
	31	SHC	13.6	13.6	13.6	13.6	13.6	13.6	13.6	13.6	13.6	13.6	13.6	13.6	13.6	13.6	13.5
21		TC	18.1	18.1	18.1	18.1	18.1	18.1	18.1	18.1	18.1	18.1	18.1	18.1	17.9	17.3	17.1
	23	SHC	7.6	7.6	7.6	7.6	7.6	7.6	7.6	7.6	7.6	7.6	7.6	7.6	7.5	7.3	7.2
	25	SHC	9.0	9.0	9.0	9.0	9.0	9.0	9.0	9.0	9.0	9.0	9.0	9.0	8.9	8.7	8.6
	27	SHC	10.4	10.4	10.4	10.4	10.4	10.4	10.4	10.4	10.4	10.4	10.4	10.4	10.3	10.0	9.9
	29	SHC	11.7	11.7	11.7	11.7	11.7	11.7	11.7	11.7	11.7	11.7	11.7	11.7	11.6	11.4	11.3
	31	SHC	13.1	13.1	13.1	13.1	13.1	13.1	13.1	13.1	13.1	13.1	13.1	13.1	13.0	12.8	12.7
22		TC	19.2	19.2	19.2	19.2	19.2	19.2	19.2	19.2	19.2	19.2	19.2	18.8	18.2	17.7	17.4
	25	SHC	8.5	8.5	8.5	8.5	8.5	8.5	8.5	8.5	8.5	8.5	8.5	8.3	8.1	7.9	7.8
	27	SHC	9.8	9.8	9.8	9.8	9.8	9.8	9.8	9.8	9.8	9.8	9.8	9.7	9.4	9.2	9.1
	29	SHC	11.2	11.2	11.2	11.2	11.2	11.2	11.2	11.2	11.2	11.2	11.2	11.0	10.8	10.6	10.5
	31	SHC	12.6	12.6	12.6	12.6	12.6	12.6	12.6	12.6	12.6	12.6	12.6	12.4	12.2	12.0	11.9
23		TC	20.3	20.3	20.3	20.3	20.3	20.3	20.3	20.3	20.3	20.3	19.7	19.1	18.6	18.0	17.8
	25	SHC	7.9	7.9	7.9	7.9	7.9	7.9	7.9	7.9	7.9	7.9	7.7	7.5	7.3	7.1	7.0
	27	SHC	9.3	9.3	9.3	9.3	9.3	9.3	9.3	9.3	9.3	9.3	9.1	8.8	8.6	8.4	8.3
	29	SHC	10.6	10.6	10.6	10.6	10.6	10.6	10.6	10.6	10.6	10.6	10.4	10.2	10.0	9.8	9.7
	31	SHC	12.0	12.0	12.0	12.0	12.0	12.0	12.0	12.0	12.0	12.0	11.8	11.6	11.4	11.2	11.1

3. Cooling Capacity of Indoor Unit

3-9. Low Silhouette Ducted Type (F2 Type)

- S-22MF2E5

Power supply : 220/230/240V 1phase-50,60Hz TC : Total Cooling Capacity (kW) SHC : Sensible Heat Capacity (kW)
This data is when the indoor unit connects with 16HP outdoor unit.

RATING CAPACITY:		2.2 kW	AIR FLOW RATE: 14.0 m³/min														
EVAPORATOR			CONDENSER														
AIR INTAKE. TEMP			AMBIENT TEMP. (°C)														
W.B.	D.B.		15	17	19	21	23	25	27	29	31	33	35	37	39	41	43
14		TC	1.5	1.5	1.5	1.5	1.5	1.5	1.5	1.5	1.5	1.5	1.5	1.5	1.5	1.5	1.5
	21	SHC	1.5	1.5	1.5	1.5	1.5	1.5	1.5	1.5	1.5	1.5	1.5	1.5	1.5	1.5	1.5
	23	SHC	1.5	1.5	1.5	1.5	1.5	1.5	1.5	1.5	1.5	1.5	1.5	1.5	1.5	1.5	1.5
	25	SHC	1.5	1.5	1.5	1.5	1.5	1.5	1.5	1.5	1.5	1.5	1.5	1.5	1.5	1.5	1.5
	27	SHC	1.5	1.5	1.5	1.5	1.5	1.5	1.5	1.5	1.5	1.5	1.5	1.5	1.5	1.5	1.5
15		TC	1.6	1.6	1.6	1.6	1.6	1.6	1.6	1.6	1.6	1.6	1.6	1.6	1.6	1.6	1.6
	21	SHC	1.6	1.6	1.6	1.6	1.6	1.6	1.6	1.6	1.6	1.6	1.6	1.6	1.6	1.6	1.6
	23	SHC	1.6	1.6	1.6	1.6	1.6	1.6	1.6	1.6	1.6	1.6	1.6	1.6	1.6	1.6	1.6
	25	SHC	1.6	1.6	1.6	1.6	1.6	1.6	1.6	1.6	1.6	1.6	1.6	1.6	1.6	1.6	1.6
	27	SHC	1.6	1.6	1.6	1.6	1.6	1.6	1.6	1.6	1.6	1.6	1.6	1.6	1.6	1.6	1.6
16		TC	1.8	1.8	1.8	1.8	1.8	1.8	1.8	1.8	1.8	1.8	1.8	1.8	1.8	1.8	1.8
	21	SHC	1.5	1.5	1.5	1.5	1.5	1.5	1.5	1.5	1.5	1.5	1.5	1.5	1.5	1.5	1.5
	23	SHC	1.8	1.8	1.8	1.8	1.8	1.8	1.8	1.8	1.8	1.8	1.8	1.8	1.8	1.8	1.8
	25	SHC	1.8	1.8	1.8	1.8	1.8	1.8	1.8	1.8	1.8	1.8	1.8	1.8	1.8	1.8	1.8
	27	SHC	1.8	1.8	1.8	1.8	1.8	1.8	1.8	1.8	1.8	1.8	1.8	1.8	1.8	1.8	1.8
	29	SHC	1.8	1.8	1.8	1.8	1.8	1.8	1.8	1.8	1.8	1.8	1.8	1.8	1.8	1.8	1.8
17		TC	1.9	1.9	1.9	1.9	1.9	1.9	1.9	1.9	1.9	1.9	1.9	1.9	1.9	1.9	1.9
	21	SHC	1.4	1.4	1.4	1.4	1.4	1.4	1.4	1.4	1.4	1.4	1.4	1.4	1.4	1.4	1.4
	23	SHC	1.7	1.7	1.7	1.7	1.7	1.7	1.7	1.7	1.7	1.7	1.7	1.7	1.7	1.7	1.7
	25	SHC	1.9	1.9	1.9	1.9	1.9	1.9	1.9	1.9	1.9	1.9	1.9	1.9	1.9	1.9	1.9
	27	SHC	1.9	1.9	1.9	1.9	1.9	1.9	1.9	1.9	1.9	1.9	1.9	1.9	1.9	1.9	1.9
	29	SHC	1.9	1.9	1.9	1.9	1.9	1.9	1.9	1.9	1.9	1.9	1.9	1.9	1.9	1.9	1.9
18		TC	2.1	2.1	2.1	2.1	2.1	2.1	2.1	2.1	2.1	2.1	2.1	2.1	2.1	2.1	2.1
	21	SHC	1.2	1.2	1.2	1.2	1.2	1.2	1.2	1.2	1.2	1.2	1.2	1.2	1.2	1.2	1.2
	23	SHC	1.6	1.6	1.6	1.6	1.6	1.6	1.6	1.6	1.6	1.6	1.6	1.6	1.6	1.6	1.6
	25	SHC	1.9	1.9	1.9	1.9	1.9	1.9	1.9	1.9	1.9	1.9	1.9	1.9	1.9	1.9	1.9
	27	SHC	2.1	2.1	2.1	2.1	2.1	2.1	2.1	2.1	2.1	2.1	2.1	2.1	2.1	2.1	2.1
	29	SHC	2.1	2.1	2.1	2.1	2.1	2.1	2.1	2.1	2.1	2.1	2.1	2.1	2.1	2.1	2.1
	31	SHC	2.1	2.1	2.1	2.1	2.1	2.1	2.1	2.1	2.1	2.1	2.1	2.1	2.1	2.1	2.1
19		TC	2.2	2.2	2.2	2.2	2.2	2.2	2.2	2.2	2.2	2.2	2.2	2.2	2.2	2.2	2.2
	21	SHC	1.1	1.1	1.1	1.1	1.1	1.1	1.1	1.1	1.1	1.1	1.1	1.1	1.1	1.1	1.1
	23	SHC	1.4	1.4	1.4	1.4	1.4	1.4	1.4	1.4	1.4	1.4	1.4	1.4	1.4	1.4	1.4
	25	SHC	1.8	1.8	1.8	1.8	1.8	1.8	1.8	1.8	1.8	1.8	1.8	1.8	1.8	1.8	1.8
	27	SHC	2.1	2.1	2.1	2.1	2.1	2.1	2.1	2.1	2.1	2.1	2.1	2.1	2.1	2.1	2.1
	29	SHC	2.2	2.2	2.2	2.2	2.2	2.2	2.2	2.2	2.2	2.2	2.2	2.2	2.2	2.2	2.2
	31	SHC	2.2	2.2	2.2	2.2	2.2	2.2	2.2	2.2	2.2	2.2	2.2	2.2	2.2	2.2	2.2
20		TC	2.3	2.3	2.3	2.3	2.3	2.3	2.3	2.3	2.3	2.3	2.3	2.3	2.3	2.3	2.3
	23	SHC	1.3	1.3	1.3	1.3	1.3	1.3	1.3	1.3	1.3	1.3	1.3	1.3	1.3	1.3	1.3
	25	SHC	1.6	1.6	1.6	1.6	1.6	1.6	1.6	1.6	1.6	1.6	1.6	1.6	1.6	1.6	1.6
	27	SHC	2.0	2.0	2.0	2.0	2.0	2.0	2.0	2.0	2.0	2.0	2.0	2.0	2.0	2.0	2.0
	29	SHC	2.3	2.3	2.3	2.3	2.3	2.3	2.3	2.3	2.3	2.3	2.3	2.3	2.3	2.3	2.3
	31	SHC	2.3	2.3	2.3	2.3	2.3	2.3	2.3	2.3	2.3	2.3	2.3	2.3	2.3	2.3	2.3
21		TC	2.5	2.5	2.5	2.5	2.5	2.5	2.5	2.5	2.5	2.5	2.5	2.5	2.5	2.4	2.3
	23	SHC	1.1	1.1	1.1	1.1	1.1	1.1	1.1	1.1	1.1	1.1	1.1	1.1	1.1	1.1	1.1
	25	SHC	1.5	1.5	1.5	1.5	1.5	1.5	1.5	1.5	1.5	1.5	1.5	1.5	1.5	1.4	1.4
	27	SHC	1.8	1.8	1.8	1.8	1.8	1.8	1.8	1.8	1.8	1.8	1.8	1.8	1.8	1.8	1.8
	29	SHC	2.2	2.2	2.2	2.2	2.2	2.2	2.2	2.2	2.2	2.2	2.2	2.2	2.2	2.1	2.1
	31	SHC	2.5	2.5	2.5	2.5	2.5	2.5	2.5	2.5	2.5	2.5	2.5	2.5	2.5	2.4	2.3
22		TC	2.6	2.6	2.6	2.6	2.6	2.6	2.6	2.6	2.6	2.6	2.6	2.6	2.5	2.4	2.4
	25	SHC	1.3	1.3	1.3	1.3	1.3	1.3	1.3	1.3	1.3	1.3	1.3	1.3	1.3	1.3	1.2
	27	SHC	1.7	1.7	1.7	1.7	1.7	1.7	1.7	1.7	1.7	1.7	1.7	1.7	1.6	1.6	1.6
	29	SHC	2.0	2.0	2.0	2.0	2.0	2.0	2.0	2.0	2.0	2.0	2.0	2.0	2.0	1.9	1.9
	31	SHC	2.4	2.4	2.4	2.4	2.4	2.4	2.4	2.4	2.4	2.4	2.4	2.3	2.3	2.3	2.3
23		TC	2.8	2.8	2.8	2.8	2.8	2.8	2.8	2.8	2.8	2.8	2.7	2.6	2.6	2.5	2.4
	25	SHC	1.2	1.2	1.2	1.2	1.2	1.2	1.2	1.2	1.2	1.2	1.2	1.1	1.1	1.1	1.1
	27	SHC	1.5	1.5	1.5	1.5	1.5	1.5	1.5	1.5	1.5	1.5	1.5	1.5	1.4	1.4	1.4
	29	SHC	1.9	1.9	1.9	1.9	1.9	1.9	1.9	1.9	1.9	1.9	1.8	1.8	1.8	1.8	1.8
	31	SHC	2.2	2.2	2.2	2.2	2.2	2.2	2.2	2.2	2.2	2.2	2.2	2.2	2.1	2.1	2.1

3. Cooling Capacity of Indoor Unit

- S-28MF2E5

Power supply : 220/230/240V 1phase-50,60Hz TC : Total Cooling Capacity (kW) SHC : Sensible Heat Capacity (kW)

This data is when the indoor unit connects with 16HP outdoor unit.

RATING CAPACITY:		2.8 kW	AIR FLOW RATE: 14.0 m³/min														
EVAPORATOR			CONDENSER														
AIR INTAKE. TEMP			AMBIENT TEMP. (°C)														
W.B.	D.B.		15	17	19	21	23	25	27	29	31	33	35	37	39	41	43
14		TC	1.9	1.9	1.9	1.9	1.9	1.9	1.9	1.9	1.9	1.9	1.9	1.9	1.9	1.9	1.9
	21	SHC	1.9	1.9	1.9	1.9	1.9	1.9	1.9	1.9	1.9	1.9	1.9	1.9	1.9	1.9	1.9
	23	SHC	1.9	1.9	1.9	1.9	1.9	1.9	1.9	1.9	1.9	1.9	1.9	1.9	1.9	1.9	1.9
	25	SHC	1.9	1.9	1.9	1.9	1.9	1.9	1.9	1.9	1.9	1.9	1.9	1.9	1.9	1.9	1.9
	27	SHC	1.9	1.9	1.9	1.9	1.9	1.9	1.9	1.9	1.9	1.9	1.9	1.9	1.9	1.9	1.9
15		TC	2.1	2.1	2.1	2.1	2.1	2.1	2.1	2.1	2.1	2.1	2.1	2.1	2.1	2.1	2.1
	21	SHC	2.1	2.1	2.1	2.1	2.1	2.1	2.1	2.1	2.1	2.1	2.1	2.1	2.1	2.1	2.1
	23	SHC	2.1	2.1	2.1	2.1	2.1	2.1	2.1	2.1	2.1	2.1	2.1	2.1	2.1	2.1	2.1
	25	SHC	2.1	2.1	2.1	2.1	2.1	2.1	2.1	2.1	2.1	2.1	2.1	2.1	2.1	2.1	2.1
	27	SHC	2.1	2.1	2.1	2.1	2.1	2.1	2.1	2.1	2.1	2.1	2.1	2.1	2.1	2.1	2.1
16		TC	2.2	2.2	2.2	2.2	2.2	2.2	2.2	2.2	2.2	2.2	2.2	2.2	2.2	2.2	2.2
	21	SHC	1.9	1.9	1.9	1.9	1.9	1.9	1.9	1.9	1.9	1.9	1.9	1.9	1.9	1.9	1.9
	23	SHC	2.2	2.2	2.2	2.2	2.2	2.2	2.2	2.2	2.2	2.2	2.2	2.2	2.2	2.2	2.2
	25	SHC	2.2	2.2	2.2	2.2	2.2	2.2	2.2	2.2	2.2	2.2	2.2	2.2	2.2	2.2	2.2
	27	SHC	2.2	2.2	2.2	2.2	2.2	2.2	2.2	2.2	2.2	2.2	2.2	2.2	2.2	2.2	2.2
	29	SHC	2.2	2.2	2.2	2.2	2.2	2.2	2.2	2.2	2.2	2.2	2.2	2.2	2.2	2.2	2.2
17		TC	2.4	2.4	2.4	2.4	2.4	2.4	2.4	2.4	2.4	2.4	2.4	2.4	2.4	2.4	2.4
	21	SHC	1.7	1.7	1.7	1.7	1.7	1.7	1.7	1.7	1.7	1.7	1.7	1.7	1.7	1.7	1.7
	23	SHC	2.2	2.2	2.2	2.2	2.2	2.2	2.2	2.2	2.2	2.2	2.2	2.2	2.2	2.2	2.2
	25	SHC	2.4	2.4	2.4	2.4	2.4	2.4	2.4	2.4	2.4	2.4	2.4	2.4	2.4	2.4	2.4
	27	SHC	2.4	2.4	2.4	2.4	2.4	2.4	2.4	2.4	2.4	2.4	2.4	2.4	2.4	2.4	2.4
	29	SHC	2.4	2.4	2.4	2.4	2.4	2.4	2.4	2.4	2.4	2.4	2.4	2.4	2.4	2.4	2.4
18		TC	2.6	2.6	2.6	2.6	2.6	2.6	2.6	2.6	2.6	2.6	2.6	2.6	2.6	2.6	2.6
	21	SHC	1.6	1.6	1.6	1.6	1.6	1.6	1.6	1.6	1.6	1.6	1.6	1.6	1.6	1.6	1.6
	23	SHC	2.0	2.0	2.0	2.0	2.0	2.0	2.0	2.0	2.0	2.0	2.0	2.0	2.0	2.0	2.0
	25	SHC	2.4	2.4	2.4	2.4	2.4	2.4	2.4	2.4	2.4	2.4	2.4	2.4	2.4	2.4	2.4
	27	SHC	2.6	2.6	2.6	2.6	2.6	2.6	2.6	2.6	2.6	2.6	2.6	2.6	2.6	2.6	2.6
	29	SHC	2.6	2.6	2.6	2.6	2.6	2.6	2.6	2.6	2.6	2.6	2.6	2.6	2.6	2.6	2.6
	31	SHC	2.6	2.6	2.6	2.6	2.6	2.6	2.6	2.6	2.6	2.6	2.6	2.6	2.6	2.6	2.6
19		TC	2.8	2.8	2.8	2.8	2.8	2.8	2.8	2.8	2.8	2.8	2.8	2.8	2.8	2.8	2.8
	21	SHC	1.4	1.4	1.4	1.4	1.4	1.4	1.4	1.4	1.4	1.4	1.4	1.4	1.4	1.4	1.4
	23	SHC	1.8	1.8	1.8	1.8	1.8	1.8	1.8	1.8	1.8	1.8	1.8	1.8	1.8	1.8	1.8
	25	SHC	2.2	2.2	2.2	2.2	2.2	2.2	2.2	2.2	2.2	2.2	2.2	2.2	2.2	2.2	2.2
	27	SHC	2.7	2.7	2.7	2.7	2.7	2.7	2.7	2.7	2.7	2.7	2.7	2.7	2.7	2.7	2.7
	29	SHC	2.8	2.8	2.8	2.8	2.8	2.8	2.8	2.8	2.8	2.8	2.8	2.8	2.8	2.8	2.8
	31	SHC	2.8	2.8	2.8	2.8	2.8	2.8	2.8	2.8	2.8	2.8	2.8	2.8	2.8	2.8	2.8
20		TC	3.0	3.0	3.0	3.0	3.0	3.0	3.0	3.0	3.0	3.0	3.0	3.0	3.0	3.0	2.9
	23	SHC	1.6	1.6	1.6	1.6	1.6	1.6	1.6	1.6	1.6	1.6	1.6	1.6	1.6	1.6	1.6
	25	SHC	2.1	2.1	2.1	2.1	2.1	2.1	2.1	2.1	2.1	2.1	2.1	2.1	2.1	2.1	2.0
	27	SHC	2.5	2.5	2.5	2.5	2.5	2.5	2.5	2.5	2.5	2.5	2.5	2.5	2.5	2.5	2.5
	29	SHC	2.9	2.9	2.9	2.9	2.9	2.9	2.9	2.9	2.9	2.9	2.9	2.9	2.9	2.9	2.9
	31	SHC	3.0	3.0	3.0	3.0	3.0	3.0	3.0	3.0	3.0	3.0	3.0	3.0	3.0	3.0	2.9
21		TC	3.2	3.2	3.2	3.2	3.2	3.2	3.2	3.2	3.2	3.2	3.2	3.2	3.1	3.0	3.0
	23	SHC	1.4	1.4	1.4	1.4	1.4	1.4	1.4	1.4	1.4	1.4	1.4	1.4	1.4	1.4	1.4
	25	SHC	1.9	1.9	1.9	1.9	1.9	1.9	1.9	1.9	1.9	1.9	1.9	1.9	1.9	1.8	1.8
	27	SHC	2.3	2.3	2.3	2.3	2.3	2.3	2.3	2.3	2.3	2.3	2.3	2.3	2.3	2.3	2.2
	29	SHC	2.7	2.7	2.7	2.7	2.7	2.7	2.7	2.7	2.7	2.7	2.7	2.7	2.7	2.7	2.7
	31	SHC	3.1	3.1	3.1	3.1	3.1	3.1	3.1	3.1	3.1	3.1	3.1	3.1	3.1	3.0	3.0
22		TC	3.4	3.4	3.4	3.4	3.4	3.4	3.4	3.4	3.4	3.4	3.4	3.3	3.2	3.1	3.1
	25	SHC	1.7	1.7	1.7	1.7	1.7	1.7	1.7	1.7	1.7	1.7	1.7	1.7	1.6	1.6	1.6
	27	SHC	2.1	2.1	2.1	2.1	2.1	2.1	2.1	2.1	2.1	2.1	2.1	2.1	2.1	2.0	2.0
	29	SHC	2.5	2.5	2.5	2.5	2.5	2.5	2.5	2.5	2.5	2.5	2.5	2.5	2.5	2.4	2.4
	31	SHC	3.0	3.0	3.0	3.0	3.0	3.0	3.0	3.0	3.0	3.0	3.0	2.9	2.9	2.9	2.9
23		TC	3.5	3.5	3.5	3.5	3.5	3.5	3.5	3.5	3.5	3.5	3.4	3.3	3.3	3.2	3.1
	25	SHC	1.5	1.5	1.5	1.5	1.5	1.5	1.5	1.5	1.5	1.5	1.4	1.4	1.4	1.4	1.3
	27	SHC	1.9	1.9	1.9	1.9	1.9	1.9	1.9	1.9	1.9	1.9	1.9	1.8	1.8	1.8	1.8
	29	SHC	2.3	2.3	2.3	2.3	2.3	2.3	2.3	2.3	2.3	2.3	2.3	2.3	2.2	2.2	2.2
	31	SHC	2.8	2.8	2.8	2.8	2.8	2.8	2.8	2.8	2.8	2.8	2.7	2.7	2.7	2.6	2.6

3. Cooling Capacity of Indoor Unit

● S-36MF2E5

Power supply : 220/230/240V 1phase-50,60Hz TC : Total Cooling Capacity (kW) SHC : Sensible Heat Capacity (kW)

This data is when the indoor unit connects with 16HP outdoor unit.

RATING CAPACITY:		3.6 kW	AIR FLOW RATE: 14.0 m³/min														
EVAPORATOR			CONDENSER														
AIR INTAKE. TEMP			AMBIENT TEMP. (°C)														
W.B.	D.B.		15	17	19	21	23	25	27	29	31	33	35	37	39	41	43
14		TC	2.4	2.4	2.4	2.4	2.4	2.4	2.4	2.4	2.4	2.4	2.4	2.4	2.4	2.4	2.4
	21	SHC	2.4	2.4	2.4	2.4	2.4	2.4	2.4	2.4	2.4	2.4	2.4	2.4	2.4	2.4	2.4
	23	SHC	2.4	2.4	2.4	2.4	2.4	2.4	2.4	2.4	2.4	2.4	2.4	2.4	2.4	2.4	2.4
	25	SHC	2.4	2.4	2.4	2.4	2.4	2.4	2.4	2.4	2.4	2.4	2.4	2.4	2.4	2.4	2.4
	27	SHC	2.4	2.4	2.4	2.4	2.4	2.4	2.4	2.4	2.4	2.4	2.4	2.4	2.4	2.4	2.4
15		TC	2.6	2.6	2.6	2.6	2.6	2.6	2.6	2.6	2.6	2.6	2.6	2.6	2.6	2.6	2.6
	21	SHC	2.5	2.5	2.5	2.5	2.5	2.5	2.5	2.5	2.5	2.5	2.5	2.5	2.5	2.5	2.5
	23	SHC	2.6	2.6	2.6	2.6	2.6	2.6	2.6	2.6	2.6	2.6	2.6	2.6	2.6	2.6	2.6
	25	SHC	2.6	2.6	2.6	2.6	2.6	2.6	2.6	2.6	2.6	2.6	2.6	2.6	2.6	2.6	2.6
	27	SHC	2.6	2.6	2.6	2.6	2.6	2.6	2.6	2.6	2.6	2.6	2.6	2.6	2.6	2.6	2.6
16		TC	2.9	2.9	2.9	2.9	2.9	2.9	2.9	2.9	2.9	2.9	2.9	2.9	2.9	2.9	2.9
	21	SHC	2.3	2.3	2.3	2.3	2.3	2.3	2.3	2.3	2.3	2.3	2.3	2.3	2.3	2.3	2.3
	23	SHC	2.8	2.8	2.8	2.8	2.8	2.8	2.8	2.8	2.8	2.8	2.8	2.8	2.8	2.8	2.8
	25	SHC	2.9	2.9	2.9	2.9	2.9	2.9	2.9	2.9	2.9	2.9	2.9	2.9	2.9	2.9	2.9
	27	SHC	2.9	2.9	2.9	2.9	2.9	2.9	2.9	2.9	2.9	2.9	2.9	2.9	2.9	2.9	2.9
	29	SHC	2.9	2.9	2.9	2.9	2.9	2.9	2.9	2.9	2.9	2.9	2.9	2.9	2.9	2.9	2.9
17		TC	3.1	3.1	3.1	3.1	3.1	3.1	3.1	3.1	3.1	3.1	3.1	3.1	3.1	3.1	3.1
	21	SHC	2.1	2.1	2.1	2.1	2.1	2.1	2.1	2.1	2.1	2.1	2.1	2.1	2.1	2.1	2.1
	23	SHC	2.6	2.6	2.6	2.6	2.6	2.6	2.6	2.6	2.6	2.6	2.6	2.6	2.6	2.6	2.6
	25	SHC	3.1	3.1	3.1	3.1	3.1	3.1	3.1	3.1	3.1	3.1	3.1	3.1	3.1	3.1	3.1
	27	SHC	3.1	3.1	3.1	3.1	3.1	3.1	3.1	3.1	3.1	3.1	3.1	3.1	3.1	3.1	3.1
	29	SHC	3.1	3.1	3.1	3.1	3.1	3.1	3.1	3.1	3.1	3.1	3.1	3.1	3.1	3.1	3.1
18		TC	3.4	3.4	3.4	3.4	3.4	3.4	3.4	3.4	3.4	3.4	3.4	3.4	3.4	3.4	3.4
	21	SHC	1.9	1.9	1.9	1.9	1.9	1.9	1.9	1.9	1.9	1.9	1.9	1.9	1.9	1.9	1.9
	23	SHC	2.4	2.4	2.4	2.4	2.4	2.4	2.4	2.4	2.4	2.4	2.4	2.4	2.4	2.4	2.4
	25	SHC	2.9	2.9	2.9	2.9	2.9	2.9	2.9	2.9	2.9	2.9	2.9	2.9	2.9	2.9	2.9
	27	SHC	3.4	3.4	3.4	3.4	3.4	3.4	3.4	3.4	3.4	3.4	3.4	3.4	3.4	3.4	3.4
	29	SHC	3.4	3.4	3.4	3.4	3.4	3.4	3.4	3.4	3.4	3.4	3.4	3.4	3.4	3.4	3.4
	31	SHC	3.4	3.4	3.4	3.4	3.4	3.4	3.4	3.4	3.4	3.4	3.4	3.4	3.4	3.4	3.4
19		TC	3.6	3.6	3.6	3.6	3.6	3.6	3.6	3.6	3.6	3.6	3.6	3.6	3.6	3.6	3.6
	21	SHC	1.7	1.7	1.7	1.7	1.7	1.7	1.7	1.7	1.7	1.7	1.7	1.7	1.7	1.7	1.7
	23	SHC	2.2	2.2	2.2	2.2	2.2	2.2	2.2	2.2	2.2	2.2	2.2	2.2	2.2	2.2	2.2
	25	SHC	2.7	2.7	2.7	2.7	2.7	2.7	2.7	2.7	2.7	2.7	2.7	2.7	2.7	2.7	2.7
	27	SHC	3.2	3.2	3.2	3.2	3.2	3.2	3.2	3.2	3.2	3.2	3.2	3.2	3.2	3.2	3.2
	29	SHC	3.6	3.6	3.6	3.6	3.6	3.6	3.6	3.6	3.6	3.6	3.6	3.6	3.6	3.6	3.6
	31	SHC	3.6	3.6	3.6	3.6	3.6	3.6	3.6	3.6	3.6	3.6	3.6	3.6	3.6	3.6	3.6
20		TC	3.8	3.8	3.8	3.8	3.8	3.8	3.8	3.8	3.8	3.8	3.8	3.8	3.8	3.8	3.8
	23	SHC	2.0	2.0	2.0	2.0	2.0	2.0	2.0	2.0	2.0	2.0	2.0	2.0	2.0	2.0	2.0
	25	SHC	2.5	2.5	2.5	2.5	2.5	2.5	2.5	2.5	2.5	2.5	2.5	2.5	2.5	2.5	2.5
	27	SHC	3.0	3.0	3.0	3.0	3.0	3.0	3.0	3.0	3.0	3.0	3.0	3.0	3.0	3.0	3.0
	29	SHC	3.5	3.5	3.5	3.5	3.5	3.5	3.5	3.5	3.5	3.5	3.5	3.5	3.5	3.5	3.4
	31	SHC	3.8	3.8	3.8	3.8	3.8	3.8	3.8	3.8	3.8	3.8	3.8	3.8	3.8	3.8	3.8
21		TC	4.1	4.1	4.1	4.1	4.1	4.1	4.1	4.1	4.1	4.1	4.1	4.1	4.0	3.9	3.8
	23	SHC	1.8	1.8	1.8	1.8	1.8	1.8	1.8	1.8	1.8	1.8	1.8	1.8	1.8	1.7	1.7
	25	SHC	2.3	2.3	2.3	2.3	2.3	2.3	2.3	2.3	2.3	2.3	2.3	2.3	2.3	2.2	2.2
	27	SHC	2.8	2.8	2.8	2.8	2.8	2.8	2.8	2.8	2.8	2.8	2.8	2.8	2.8	2.7	2.7
	29	SHC	3.3	3.3	3.3	3.3	3.3	3.3	3.3	3.3	3.3	3.3	3.3	3.3	3.2	3.2	3.2
	31	SHC	3.8	3.8	3.8	3.8	3.8	3.8	3.8	3.8	3.8	3.8	3.8	3.8	3.7	3.7	3.7
22		TC	4.3	4.3	4.3	4.3	4.3	4.3	4.3	4.3	4.3	4.3	4.3	4.2	4.1	4.0	3.9
	25	SHC	2.1	2.1	2.1	2.1	2.1	2.1	2.1	2.1	2.1	2.1	2.1	2.0	2.0	2.0	1.9
	27	SHC	2.6	2.6	2.6	2.6	2.6	2.6	2.6	2.6	2.6	2.6	2.6	2.5	2.5	2.4	2.4
	29	SHC	3.1	3.1	3.1	3.1	3.1	3.1	3.1	3.1	3.1	3.1	3.1	3.0	3.0	2.9	2.9
	31	SHC	3.5	3.5	3.5	3.5	3.5	3.5	3.5	3.5	3.5	3.5	3.5	3.5	3.5	3.4	3.4
23		TC	4.6	4.6	4.6	4.6	4.6	4.6	4.6	4.6	4.6	4.6	4.4	4.3	4.2	4.1	4.0
	25	SHC	1.9	1.9	1.9	1.9	1.9	1.9	1.9	1.9	1.9	1.9	1.8	1.8	1.7	1.7	1.7
	27	SHC	2.4	2.4	2.4	2.4	2.4	2.4	2.4	2.4	2.4	2.4	2.3	2.3	2.2	2.2	2.2
	29	SHC	2.8	2.8	2.8	2.8	2.8	2.8	2.8	2.8	2.8	2.8	2.8	2.8	2.7	2.7	2.7
	31	SHC	3.3	3.3	3.3	3.3	3.3	3.3	3.3	3.3	3.3	3.3	3.3	3.2	3.2	3.2	3.1

3. Cooling Capacity of Indoor Unit

- S-45MF2E5

Power supply : 220/230/240V 1phase-50,60Hz TC : Total Cooling Capacity (kW) SHC : Sensible Heat Capacity (kW)

This data is when the indoor unit connects with 16HP outdoor unit.

RATING CAPACITY:		4.5 kW	AIR FLOW RATE: 14.0 m³/min														
EVAPORATOR			CONDENSER														
AIR INTAKE. TEMP			AMBIENT TEMP. (°C)														
W.B.	D.B.		15	17	19	21	23	25	27	29	31	33	35	37	39	41	43
14		TC	3.0	3.0	3.0	3.0	3.0	3.0	3.0	3.0	3.0	3.0	3.0	3.0	3.0	3.0	3.0
	21	SHC	2.9	2.9	2.9	2.9	2.9	2.9	2.9	2.9	2.9	2.9	2.9	2.9	2.9	2.9	2.9
	23	SHC	3.0	3.0	3.0	3.0	3.0	3.0	3.0	3.0	3.0	3.0	3.0	3.0	3.0	3.0	3.0
	25	SHC	3.0	3.0	3.0	3.0	3.0	3.0	3.0	3.0	3.0	3.0	3.0	3.0	3.0	3.0	3.0
	27	SHC	3.0	3.0	3.0	3.0	3.0	3.0	3.0	3.0	3.0	3.0	3.0	3.0	3.0	3.0	3.0
15		TC	3.3	3.3	3.3	3.3	3.3	3.3	3.3	3.3	3.3	3.3	3.3	3.3	3.3	3.3	3.3
	21	SHC	2.8	2.8	2.8	2.8	2.8	2.8	2.8	2.8	2.8	2.8	2.8	2.8	2.8	2.8	2.8
	23	SHC	3.2	3.2	3.2	3.2	3.2	3.2	3.2	3.2	3.2	3.2	3.2	3.2	3.2	3.2	3.2
	25	SHC	3.3	3.3	3.3	3.3	3.3	3.3	3.3	3.3	3.3	3.3	3.3	3.3	3.3	3.3	3.3
	27	SHC	3.3	3.3	3.3	3.3	3.3	3.3	3.3	3.3	3.3	3.3	3.3	3.3	3.3	3.3	3.3
16		TC	3.6	3.6	3.6	3.6	3.6	3.6	3.6	3.6	3.6	3.6	3.6	3.6	3.6	3.6	3.6
	21	SHC	2.6	2.6	2.6	2.6	2.6	2.6	2.6	2.6	2.6	2.6	2.6	2.6	2.6	2.6	2.6
	23	SHC	3.1	3.1	3.1	3.1	3.1	3.1	3.1	3.1	3.1	3.1	3.1	3.1	3.1	3.1	3.1
	25	SHC	3.6	3.6	3.6	3.6	3.6	3.6	3.6	3.6	3.6	3.6	3.6	3.6	3.6	3.6	3.6
	27	SHC	3.6	3.6	3.6	3.6	3.6	3.6	3.6	3.6	3.6	3.6	3.6	3.6	3.6	3.6	3.6
	29	SHC	3.6	3.6	3.6	3.6	3.6	3.6	3.6	3.6	3.6	3.6	3.6	3.6	3.6	3.6	3.6
17		TC	3.9	3.9	3.9	3.9	3.9	3.9	3.9	3.9	3.9	3.9	3.9	3.9	3.9	3.9	3.9
	21	SHC	2.4	2.4	2.4	2.4	2.4	2.4	2.4	2.4	2.4	2.4	2.4	2.4	2.4	2.4	2.4
	23	SHC	2.9	2.9	2.9	2.9	2.9	2.9	2.9	2.9	2.9	2.9	2.9	2.9	2.9	2.9	2.9
	25	SHC	3.4	3.4	3.4	3.4	3.4	3.4	3.4	3.4	3.4	3.4	3.4	3.4	3.4	3.4	3.4
	27	SHC	3.9	3.9	3.9	3.9	3.9	3.9	3.9	3.9	3.9	3.9	3.9	3.9	3.9	3.9	3.9
	29	SHC	3.9	3.9	3.9	3.9	3.9	3.9	3.9	3.9	3.9	3.9	3.9	3.9	3.9	3.9	3.9
18		TC	4.2	4.2	4.2	4.2	4.2	4.2	4.2	4.2	4.2	4.2	4.2	4.2	4.2	4.2	4.2
	21	SHC	2.3	2.3	2.3	2.3	2.3	2.3	2.3	2.3	2.3	2.3	2.3	2.3	2.3	2.3	2.3
	23	SHC	2.7	2.7	2.7	2.7	2.7	2.7	2.7	2.7	2.7	2.7	2.7	2.7	2.7	2.7	2.7
	25	SHC	3.2	3.2	3.2	3.2	3.2	3.2	3.2	3.2	3.2	3.2	3.2	3.2	3.2	3.2	3.2
	27	SHC	3.7	3.7	3.7	3.7	3.7	3.7	3.7	3.7	3.7	3.7	3.7	3.7	3.7	3.7	3.7
	29	SHC	4.2	4.2	4.2	4.2	4.2	4.2	4.2	4.2	4.2	4.2	4.2	4.2	4.2	4.2	4.2
	31	SHC	4.2	4.2	4.2	4.2	4.2	4.2	4.2	4.2	4.2	4.2	4.2	4.2	4.2	4.2	4.2
19		TC	4.5	4.5	4.5	4.5	4.5	4.5	4.5	4.5	4.5	4.5	4.5	4.5	4.5	4.5	4.5
	21	SHC	2.1	2.1	2.1	2.1	2.1	2.1	2.1	2.1	2.1	2.1	2.1	2.1	2.1	2.1	2.1
	23	SHC	2.6	2.6	2.6	2.6	2.6	2.6	2.6	2.6	2.6	2.6	2.6	2.6	2.6	2.6	2.6
	25	SHC	3.0	3.0	3.0	3.0	3.0	3.0	3.0	3.0	3.0	3.0	3.0	3.0	3.0	3.0	3.0
	27	SHC	3.5	3.5	3.5	3.5	3.5	3.5	3.5	3.5	3.5	3.5	3.5	3.5	3.5	3.5	3.5
	29	SHC	4.0	4.0	4.0	4.0	4.0	4.0	4.0	4.0	4.0	4.0	4.0	4.0	4.0	4.0	4.0
	31	SHC	4.5	4.5	4.5	4.5	4.5	4.5	4.5	4.5	4.5	4.5	4.5	4.5	4.5	4.5	4.5
20		TC	4.8	4.8	4.8	4.8	4.8	4.8	4.8	4.8	4.8	4.8	4.8	4.8	4.8	4.8	4.7
	23	SHC	2.4	2.4	2.4	2.4	2.4	2.4	2.4	2.4	2.4	2.4	2.4	2.4	2.4	2.4	2.3
	25	SHC	2.9	2.9	2.9	2.9	2.9	2.9	2.9	2.9	2.9	2.9	2.9	2.9	2.9	2.9	2.8
	27	SHC	3.3	3.3	3.3	3.3	3.3	3.3	3.3	3.3	3.3	3.3	3.3	3.3	3.3	3.3	3.3
	29	SHC	3.8	3.8	3.8	3.8	3.8	3.8	3.8	3.8	3.8	3.8	3.8	3.8	3.8	3.8	3.8
	31	SHC	4.3	4.3	4.3	4.3	4.3	4.3	4.3	4.3	4.3	4.3	4.3	4.3	4.3	4.3	4.3
21		TC	5.1	5.1	5.1	5.1	5.1	5.1	5.1	5.1	5.1	5.1	5.1	5.1	5.0	4.9	4.8
	23	SHC	2.2	2.2	2.2	2.2	2.2	2.2	2.2	2.2	2.2	2.2	2.2	2.2	2.2	2.1	2.1
	25	SHC	2.7	2.7	2.7	2.7	2.7	2.7	2.7	2.7	2.7	2.7	2.7	2.7	2.6	2.6	2.6
	27	SHC	3.1	3.1	3.1	3.1	3.1	3.1	3.1	3.1	3.1	3.1	3.1	3.1	3.1	3.1	3.0
	29	SHC	3.6	3.6	3.6	3.6	3.6	3.6	3.6	3.6	3.6	3.6	3.6	3.6	3.6	3.5	3.5
	31	SHC	4.1	4.1	4.1	4.1	4.1	4.1	4.1	4.1	4.1	4.1	4.1	4.1	4.1	4.0	4.0
22		TC	5.4	5.4	5.4	5.4	5.4	5.4	5.4	5.4	5.4	5.4	5.4	5.3	5.1	5.0	4.9
	25	SHC	2.5	2.5	2.5	2.5	2.5	2.5	2.5	2.5	2.5	2.5	2.5	2.4	2.4	2.3	2.3
	27	SHC	2.9	2.9	2.9	2.9	2.9	2.9	2.9	2.9	2.9	2.9	2.9	2.9	2.8	2.8	2.8
	29	SHC	3.4	3.4	3.4	3.4	3.4	3.4	3.4	3.4	3.4	3.4	3.4	3.4	3.3	3.3	3.2
	31	SHC	3.9	3.9	3.9	3.9	3.9	3.9	3.9	3.9	3.9	3.9	3.9	3.8	3.8	3.7	3.7
23		TC	5.7	5.7	5.7	5.7	5.7	5.7	5.7	5.7	5.7	5.7	5.5	5.4	5.2	5.1	5.0
	25	SHC	2.3	2.3	2.3	2.3	2.3	2.3	2.3	2.3	2.3	2.3	2.2	2.1	2.1	2.0	2.0
	27	SHC	2.7	2.7	2.7	2.7	2.7	2.7	2.7	2.7	2.7	2.7	2.7	2.6	2.6	2.5	2.5
	29	SHC	3.2	3.2	3.2	3.2	3.2	3.2	3.2	3.2	3.2	3.2	3.2	3.1	3.0	3.0	3.0
	31	SHC	3.7	3.7	3.7	3.7	3.7	3.7	3.7	3.7	3.7	3.7	3.6	3.6	3.5	3.5	3.5

3. Cooling Capacity of Indoor Unit

● S-56MF2E5

Power supply :220/230/240V 1phase-50,60Hz TC : Total Cooling Capacity (kW) SHC : Sensible Heat Capacity (kW)

This data is when the indoor unit connects with 16HP outdoor unit.

RATING CAPACITY:		5.6 kW	AIR FLOW RATE:16.0 m³/min														
EVAPORATOR			CONDENSER														
AIR INTAKE. TEMP			AMBIENT TEMP. (°C)														
W.B.	D.B.		15	17	19	21	23	25	27	29	31	33	35	37	39	41	43
14		TC	3.7	3.7	3.7	3.7	3.7	3.7	3.7	3.7	3.7	3.7	3.7	3.7	3.7	3.7	3.7
	21	SHC	3.5	3.5	3.5	3.5	3.5	3.5	3.5	3.5	3.5	3.5	3.5	3.5	3.5	3.5	3.5
	23	SHC	3.7	3.7	3.7	3.7	3.7	3.7	3.7	3.7	3.7	3.7	3.7	3.7	3.7	3.7	3.7
	25	SHC	3.7	3.7	3.7	3.7	3.7	3.7	3.7	3.7	3.7	3.7	3.7	3.7	3.7	3.7	3.7
	27	SHC	3.7	3.7	3.7	3.7	3.7	3.7	3.7	3.7	3.7	3.7	3.7	3.7	3.7	3.7	3.7
15		TC	4.1	4.1	4.1	4.1	4.1	4.1	4.1	4.1	4.1	4.1	4.1	4.1	4.1	4.1	4.1
	21	SHC	3.4	3.4	3.4	3.4	3.4	3.4	3.4	3.4	3.4	3.4	3.4	3.4	3.4	3.4	3.4
	23	SHC	3.9	3.9	3.9	3.9	3.9	3.9	3.9	3.9	3.9	3.9	3.9	3.9	3.9	3.9	3.9
	25	SHC	4.1	4.1	4.1	4.1	4.1	4.1	4.1	4.1	4.1	4.1	4.1	4.1	4.1	4.1	4.1
	27	SHC	4.1	4.1	4.1	4.1	4.1	4.1	4.1	4.1	4.1	4.1	4.1	4.1	4.1	4.1	4.1
16		TC	4.5	4.5	4.5	4.5	4.5	4.5	4.5	4.5	4.5	4.5	4.5	4.5	4.5	4.5	4.5
	21	SHC	3.2	3.2	3.2	3.2	3.2	3.2	3.2	3.2	3.2	3.2	3.2	3.2	3.2	3.2	3.2
	23	SHC	3.7	3.7	3.7	3.7	3.7	3.7	3.7	3.7	3.7	3.7	3.7	3.7	3.7	3.7	3.7
	25	SHC	4.3	4.3	4.3	4.3	4.3	4.3	4.3	4.3	4.3	4.3	4.3	4.3	4.3	4.3	4.3
	27	SHC	4.5	4.5	4.5	4.5	4.5	4.5	4.5	4.5	4.5	4.5	4.5	4.5	4.5	4.5	4.5
	29	SHC	4.5	4.5	4.5	4.5	4.5	4.5	4.5	4.5	4.5	4.5	4.5	4.5	4.5	4.5	4.5
17		TC	4.9	4.9	4.9	4.9	4.9	4.9	4.9	4.9	4.9	4.9	4.9	4.9	4.9	4.9	4.9
	21	SHC	3.0	3.0	3.0	3.0	3.0	3.0	3.0	3.0	3.0	3.0	3.0	3.0	3.0	3.0	3.0
	23	SHC	3.5	3.5	3.5	3.5	3.5	3.5	3.5	3.5	3.5	3.5	3.5	3.5	3.5	3.5	3.5
	25	SHC	4.1	4.1	4.1	4.1	4.1	4.1	4.1	4.1	4.1	4.1	4.1	4.1	4.1	4.1	4.1
	27	SHC	4.7	4.7	4.7	4.7	4.7	4.7	4.7	4.7	4.7	4.7	4.7	4.7	4.7	4.7	4.7
	29	SHC	4.9	4.9	4.9	4.9	4.9	4.9	4.9	4.9	4.9	4.9	4.9	4.9	4.9	4.9	4.9
18		TC	5.2	5.2	5.2	5.2	5.2	5.2	5.2	5.2	5.2	5.2	5.2	5.2	5.2	5.2	5.2
	21	SHC	2.8	2.8	2.8	2.8	2.8	2.8	2.8	2.8	2.8	2.8	2.8	2.8	2.8	2.8	2.8
	23	SHC	3.3	3.3	3.3	3.3	3.3	3.3	3.3	3.3	3.3	3.3	3.3	3.3	3.3	3.3	3.3
	25	SHC	3.9	3.9	3.9	3.9	3.9	3.9	3.9	3.9	3.9	3.9	3.9	3.9	3.9	3.9	3.9
	27	SHC	4.5	4.5	4.5	4.5	4.5	4.5	4.5	4.5	4.5	4.5	4.5	4.5	4.5	4.5	4.5
	29	SHC	5.0	5.0	5.0	5.0	5.0	5.0	5.0	5.0	5.0	5.0	5.0	5.0	5.0	5.0	5.0
	31	SHC	5.2	5.2	5.2	5.2	5.2	5.2	5.2	5.2	5.2	5.2	5.2	5.2	5.2	5.2	5.2
19		TC	5.6	5.6	5.6	5.6	5.6	5.6	5.6	5.6	5.6	5.6	5.6	5.6	5.6	5.6	5.6
	21	SHC	2.6	2.6	2.6	2.6	2.6	2.6	2.6	2.6	2.6	2.6	2.6	2.6	2.6	2.6	2.6
	23	SHC	3.1	3.1	3.1	3.1	3.1	3.1	3.1	3.1	3.1	3.1	3.1	3.1	3.1	3.1	3.1
	25	SHC	3.7	3.7	3.7	3.7	3.7	3.7	3.7	3.7	3.7	3.7	3.7	3.7	3.7	3.7	3.7
	27	SHC	4.3	4.3	4.3	4.3	4.3	4.3	4.3	4.3	4.3	4.3	4.3	4.3	4.3	4.3	4.3
	29	SHC	4.8	4.8	4.8	4.8	4.8	4.8	4.8	4.8	4.8	4.8	4.8	4.8	4.8	4.8	4.8
	31	SHC	5.4	5.4	5.4	5.4	5.4	5.4	5.4	5.4	5.4	5.4	5.4	5.4	5.4	5.4	5.4
20		TC	6.0	6.0	6.0	6.0	6.0	6.0	6.0	6.0	6.0	6.0	6.0	6.0	6.0	5.9	5.9
	23	SHC	2.9	2.9	2.9	2.9	2.9	2.9	2.9	2.9	2.9	2.9	2.9	2.9	2.9	2.9	2.9
	25	SHC	3.5	3.5	3.5	3.5	3.5	3.5	3.5	3.5	3.5	3.5	3.5	3.5	3.5	3.5	3.4
	27	SHC	4.0	4.0	4.0	4.0	4.0	4.0	4.0	4.0	4.0	4.0	4.0	4.0	4.0	4.0	4.0
	29	SHC	4.6	4.6	4.6	4.6	4.6	4.6	4.6	4.6	4.6	4.6	4.6	4.6	4.6	4.6	4.6
	31	SHC	5.2	5.2	5.2	5.2	5.2	5.2	5.2	5.2	5.2	5.2	5.2	5.2	5.2	5.2	5.1
21		TC	6.3	6.3	6.3	6.3	6.3	6.3	6.3	6.3	6.3	6.3	6.3	6.3	6.3	6.1	6.0
	23	SHC	2.7	2.7	2.7	2.7	2.7	2.7	2.7	2.7	2.7	2.7	2.7	2.7	2.7	2.6	2.6
	25	SHC	3.3	3.3	3.3	3.3	3.3	3.3	3.3	3.3	3.3	3.3	3.3	3.3	3.2	3.2	3.1
	27	SHC	3.8	3.8	3.8	3.8	3.8	3.8	3.8	3.8	3.8	3.8	3.8	3.8	3.8	3.7	3.7
	29	SHC	4.4	4.4	4.4	4.4	4.4	4.4	4.4	4.4	4.4	4.4	4.4	4.4	4.3	4.3	4.2
	31	SHC	4.9	4.9	4.9	4.9	4.9	4.9	4.9	4.9	4.9	4.9	4.9	4.9	4.9	4.8	4.8
22		TC	6.7	6.7	6.7	6.7	6.7	6.7	6.7	6.7	6.7	6.7	6.7	6.6	6.4	6.2	6.1
	25	SHC	3.0	3.0	3.0	3.0	3.0	3.0	3.0	3.0	3.0	3.0	3.0	3.0	2.9	2.8	2.8
	27	SHC	3.6	3.6	3.6	3.6	3.6	3.6	3.6	3.6	3.6	3.6	3.6	3.5	3.5	3.4	3.4
	29	SHC	4.1	4.1	4.1	4.1	4.1	4.1	4.1	4.1	4.1	4.1	4.1	4.1	4.0	4.0	3.9
	31	SHC	4.7	4.7	4.7	4.7	4.7	4.7	4.7	4.7	4.7	4.7	4.7	4.7	4.6	4.5	4.5
23		TC	7.1	7.1	7.1	7.1	7.1	7.1	7.1	7.1	7.1	7.1	6.9	6.7	6.5	6.3	6.2
	25	SHC	2.8	2.8	2.8	2.8	2.8	2.8	2.8	2.8	2.8	2.8	2.7	2.6	2.6	2.5	2.5
	27	SHC	3.3	3.3	3.3	3.3	3.3	3.3	3.3	3.3	3.3	3.3	3.3	3.2	3.1	3.1	3.0
	29	SHC	3.9	3.9	3.9	3.9	3.9	3.9	3.9	3.9	3.9	3.9	3.8	3.8	3.7	3.6	3.6
	31	SHC	4.5	4.5	4.5	4.5	4.5	4.5	4.5	4.5	4.5	4.5	4.4	4.3	4.3	4.2	4.2

3. Cooling Capacity of Indoor Unit

- S-60MF2E5

Power supply :220/230/240V 1phase-50,60Hz TC : Total Cooling Capacity (kW) SHC : Sensible Heat Capacity (kW)
This data is when the indoor unit connects with 16HP outdoor unit.

RATING CAPACITY:		6.0 kW AIR FLOW RATE: 21.0 m³/min															
EVAPORATOR		CONDENSER															
AIR INTAKE. TEMP		AMBIENT TEMP. (°C)															
W.B.	D.B.		15	17	19	21	23	25	27	29	31	33	35	37	39	41	43
14		TC	4.0	4.0	4.0	4.0	4.0	4.0	4.0	4.0	4.0	4.0	4.0	4.0	4.0	4.0	4.0
	21	SHC	4.0	4.0	4.0	4.0	4.0	4.0	4.0	4.0	4.0	4.0	4.0	4.0	4.0	4.0	4.0
	23	SHC	4.0	4.0	4.0	4.0	4.0	4.0	4.0	4.0	4.0	4.0	4.0	4.0	4.0	4.0	4.0
	25	SHC	4.0	4.0	4.0	4.0	4.0	4.0	4.0	4.0	4.0	4.0	4.0	4.0	4.0	4.0	4.0
	27	SHC	4.0	4.0	4.0	4.0	4.0	4.0	4.0	4.0	4.0	4.0	4.0	4.0	4.0	4.0	4.0
15		TC	4.4	4.4	4.4	4.4	4.4	4.4	4.4	4.4	4.4	4.4	4.4	4.4	4.4	4.4	4.4
	21	SHC	4.0	4.0	4.0	4.0	4.0	4.0	4.0	4.0	4.0	4.0	4.0	4.0	4.0	4.0	4.0
	23	SHC	4.4	4.4	4.4	4.4	4.4	4.4	4.4	4.4	4.4	4.4	4.4	4.4	4.4	4.4	4.4
	25	SHC	4.4	4.4	4.4	4.4	4.4	4.4	4.4	4.4	4.4	4.4	4.4	4.4	4.4	4.4	4.4
	27	SHC	4.4	4.4	4.4	4.4	4.4	4.4	4.4	4.4	4.4	4.4	4.4	4.4	4.4	4.4	4.4
16		TC	4.8	4.8	4.8	4.8	4.8	4.8	4.8	4.8	4.8	4.8	4.8	4.8	4.8	4.8	4.8
	21	SHC	3.7	3.7	3.7	3.7	3.7	3.7	3.7	3.7	3.7	3.7	3.7	3.7	3.7	3.7	3.7
	23	SHC	4.4	4.4	4.4	4.4	4.4	4.4	4.4	4.4	4.4	4.4	4.4	4.4	4.4	4.4	4.4
	25	SHC	4.8	4.8	4.8	4.8	4.8	4.8	4.8	4.8	4.8	4.8	4.8	4.8	4.8	4.8	4.8
	27	SHC	4.8	4.8	4.8	4.8	4.8	4.8	4.8	4.8	4.8	4.8	4.8	4.8	4.8	4.8	4.8
	29	SHC	4.8	4.8	4.8	4.8	4.8	4.8	4.8	4.8	4.8	4.8	4.8	4.8	4.8	4.8	4.8
17		TC	5.2	5.2	5.2	5.2	5.2	5.2	5.2	5.2	5.2	5.2	5.2	5.2	5.2	5.2	5.2
	21	SHC	3.4	3.4	3.4	3.4	3.4	3.4	3.4	3.4	3.4	3.4	3.4	3.4	3.4	3.4	3.4
	23	SHC	4.2	4.2	4.2	4.2	4.2	4.2	4.2	4.2	4.2	4.2	4.2	4.2	4.2	4.2	4.2
	25	SHC	4.9	4.9	4.9	4.9	4.9	4.9	4.9	4.9	4.9	4.9	4.9	4.9	4.9	4.9	4.9
	27	SHC	5.2	5.2	5.2	5.2	5.2	5.2	5.2	5.2	5.2	5.2	5.2	5.2	5.2	5.2	5.2
	29	SHC	5.2	5.2	5.2	5.2	5.2	5.2	5.2	5.2	5.2	5.2	5.2	5.2	5.2	5.2	5.2
18		TC	5.6	5.6	5.6	5.6	5.6	5.6	5.6	5.6	5.6	5.6	5.6	5.6	5.6	5.6	5.6
	21	SHC	3.1	3.1	3.1	3.1	3.1	3.1	3.1	3.1	3.1	3.1	3.1	3.1	3.1	3.1	3.1
	23	SHC	3.9	3.9	3.9	3.9	3.9	3.9	3.9	3.9	3.9	3.9	3.9	3.9	3.9	3.9	3.9
	25	SHC	4.6	4.6	4.6	4.6	4.6	4.6	4.6	4.6	4.6	4.6	4.6	4.6	4.6	4.6	4.6
	27	SHC	5.3	5.3	5.3	5.3	5.3	5.3	5.3	5.3	5.3	5.3	5.3	5.3	5.3	5.3	5.3
	29	SHC	5.6	5.6	5.6	5.6	5.6	5.6	5.6	5.6	5.6	5.6	5.6	5.6	5.6	5.6	5.6
	31	SHC	5.6	5.6	5.6	5.6	5.6	5.6	5.6	5.6	5.6	5.6	5.6	5.6	5.6	5.6	5.6
19		TC	6.0	6.0	6.0	6.0	6.0	6.0	6.0	6.0	6.0	6.0	6.0	6.0	6.0	6.0	6.0
	21	SHC	2.8	2.8	2.8	2.8	2.8	2.8	2.8	2.8	2.8	2.8	2.8	2.8	2.8	2.8	2.8
	23	SHC	3.6	3.6	3.6	3.6	3.6	3.6	3.6	3.6	3.6	3.6	3.6	3.6	3.6	3.6	3.6
	25	SHC	4.3	4.3	4.3	4.3	4.3	4.3	4.3	4.3	4.3	4.3	4.3	4.3	4.3	4.3	4.3
	27	SHC	5.1	5.1	5.1	5.1	5.1	5.1	5.1	5.1	5.1	5.1	5.1	5.1	5.1	5.1	5.1
	29	SHC	5.8	5.8	5.8	5.8	5.8	5.8	5.8	5.8	5.8	5.8	5.8	5.8	5.8	5.8	5.8
	31	SHC	6.0	6.0	6.0	6.0	6.0	6.0	6.0	6.0	6.0	6.0	6.0	6.0	6.0	6.0	6.0
20		TC	6.4	6.4	6.4	6.4	6.4	6.4	6.4	6.4	6.4	6.4	6.4	6.4	6.4	6.4	6.3
	23	SHC	3.3	3.3	3.3	3.3	3.3	3.3	3.3	3.3	3.3	3.3	3.3	3.3	3.3	3.3	3.2
	25	SHC	4.0	4.0	4.0	4.0	4.0	4.0	4.0	4.0	4.0	4.0	4.0	4.0	4.0	4.0	4.0
	27	SHC	4.7	4.7	4.7	4.7	4.7	4.7	4.7	4.7	4.7	4.7	4.7	4.7	4.7	4.7	4.7
	29	SHC	5.5	5.5	5.5	5.5	5.5	5.5	5.5	5.5	5.5	5.5	5.5	5.5	5.5	5.5	5.4
	31	SHC	6.2	6.2	6.2	6.2	6.2	6.2	6.2	6.2	6.2	6.2	6.2	6.2	6.2	6.2	6.2
21		TC	6.8	6.8	6.8	6.8	6.8	6.8	6.8	6.8	6.8	6.8	6.8	6.8	6.7	6.5	6.4
	23	SHC	3.0	3.0	3.0	3.0	3.0	3.0	3.0	3.0	3.0	3.0	3.0	3.0	2.9	2.9	2.8
	25	SHC	3.7	3.7	3.7	3.7	3.7	3.7	3.7	3.7	3.7	3.7	3.7	3.7	3.7	3.6	3.6
	27	SHC	4.4	4.4	4.4	4.4	4.4	4.4	4.4	4.4	4.4	4.4	4.4	4.4	4.4	4.3	4.3
	29	SHC	5.2	5.2	5.2	5.2	5.2	5.2	5.2	5.2	5.2	5.2	5.2	5.2	5.1	5.1	5.0
	31	SHC	5.9	5.9	5.9	5.9	5.9	5.9	5.9	5.9	5.9	5.9	5.9	5.9	5.9	5.8	5.8
22		TC	7.2	7.2	7.2	7.2	7.2	7.2	7.2	7.2	7.2	7.2	7.2	7.0	6.8	6.6	6.5
	25	SHC	3.4	3.4	3.4	3.4	3.4	3.4	3.4	3.4	3.4	3.4	3.4	3.3	3.3	3.2	3.2
	27	SHC	4.1	4.1	4.1	4.1	4.1	4.1	4.1	4.1	4.1	4.1	4.1	4.1	4.0	3.9	3.9
	29	SHC	4.8	4.8	4.8	4.8	4.8	4.8	4.8	4.8	4.8	4.8	4.8	4.8	4.7	4.6	4.6
	31	SHC	5.6	5.6	5.6	5.6	5.6	5.6	5.6	5.6	5.6	5.6	5.6	5.5	5.5	5.4	5.4
23		TC	7.6	7.6	7.6	7.6	7.6	7.6	7.6	7.6	7.6	7.6	7.4	7.2	7.0	6.8	6.7
	25	SHC	3.1	3.1	3.1	3.1	3.1	3.1	3.1	3.1	3.1	3.1	3.0	2.9	2.8	2.8	2.7
	27	SHC	3.8	3.8	3.8	3.8	3.8	3.8	3.8	3.8	3.8	3.8	3.7	3.7	3.6	3.5	3.5
	29	SHC	4.5	4.5	4.5	4.5	4.5	4.5	4.5	4.5	4.5	4.5	4.5	4.4	4.3	4.3	4.2
	31	SHC	5.3	5.3	5.3	5.3	5.3	5.3	5.3	5.3	5.3	5.3	5.2	5.1	5.1	5.0	5.0

3. Cooling Capacity of Indoor Unit

● S-73MF2E5

Power supply : 220/230/240V 1phase-50,60Hz TC : Total Cooling Capacity (kW) SHC : Sensible Heat Capacity (kW)

This data is when the indoor unit connects with 16HP outdoor unit.

RATING CAPACITY:		7.3 kW AIR FLOW RATE: 21.0 m³/min															
EVAPORATOR		CONDENSER															
AIR INTAKE. TEMP		AMBIENT TEMP. (°C)															
W.B.	D.B.		15	17	19	21	23	25	27	29	31	33	35	37	39	41	43
14		TC	4.9	4.9	4.9	4.9	4.9	4.9	4.9	4.9	4.9	4.9	4.9	4.9	4.9	4.9	4.9
	21	SHC	4.3	4.3	4.3	4.3	4.3	4.3	4.3	4.3	4.3	4.3	4.3	4.3	4.3	4.3	4.3
	23	SHC	4.9	4.9	4.9	4.9	4.9	4.9	4.9	4.9	4.9	4.9	4.9	4.9	4.9	4.9	4.9
	25	SHC	4.9	4.9	4.9	4.9	4.9	4.9	4.9	4.9	4.9	4.9	4.9	4.9	4.9	4.9	4.9
	27	SHC	4.9	4.9	4.9	4.9	4.9	4.9	4.9	4.9	4.9	4.9	4.9	4.9	4.9	4.9	4.9
15		TC	5.4	5.4	5.4	5.4	5.4	5.4	5.4	5.4	5.4	5.4	5.4	5.4	5.4	5.4	5.4
	21	SHC	4.1	4.1	4.1	4.1	4.1	4.1	4.1	4.1	4.1	4.1	4.1	4.1	4.1	4.1	4.1
	23	SHC	4.8	4.8	4.8	4.8	4.8	4.8	4.8	4.8	4.8	4.8	4.8	4.8	4.8	4.8	4.8
	25	SHC	5.4	5.4	5.4	5.4	5.4	5.4	5.4	5.4	5.4	5.4	5.4	5.4	5.4	5.4	5.4
	27	SHC	5.4	5.4	5.4	5.4	5.4	5.4	5.4	5.4	5.4	5.4	5.4	5.4	5.4	5.4	5.4
16		TC	5.8	5.8	5.8	5.8	5.8	5.8	5.8	5.8	5.8	5.8	5.8	5.8	5.8	5.8	5.8
	21	SHC	4.0	4.0	4.0	4.0	4.0	4.0	4.0	4.0	4.0	4.0	4.0	4.0	4.0	4.0	4.0
	23	SHC	4.6	4.6	4.6	4.6	4.6	4.6	4.6	4.6	4.6	4.6	4.6	4.6	4.6	4.6	4.6
	25	SHC	5.2	5.2	5.2	5.2	5.2	5.2	5.2	5.2	5.2	5.2	5.2	5.2	5.2	5.2	5.2
	27	SHC	5.8	5.8	5.8	5.8	5.8	5.8	5.8	5.8	5.8	5.8	5.8	5.8	5.8	5.8	5.8
	29	SHC	5.8	5.8	5.8	5.8	5.8	5.8	5.8	5.8	5.8	5.8	5.8	5.8	5.8	5.8	5.8
17		TC	6.3	6.3	6.3	6.3	6.3	6.3	6.3	6.3	6.3	6.3	6.3	6.3	6.3	6.3	6.3
	21	SHC	3.8	3.8	3.8	3.8	3.8	3.8	3.8	3.8	3.8	3.8	3.8	3.8	3.8	3.8	3.8
	23	SHC	4.4	4.4	4.4	4.4	4.4	4.4	4.4	4.4	4.4	4.4	4.4	4.4	4.4	4.4	4.4
	25	SHC	5.0	5.0	5.0	5.0	5.0	5.0	5.0	5.0	5.0	5.0	5.0	5.0	5.0	5.0	5.0
	27	SHC	5.7	5.7	5.7	5.7	5.7	5.7	5.7	5.7	5.7	5.7	5.7	5.7	5.7	5.7	5.7
	29	SHC	6.3	6.3	6.3	6.3	6.3	6.3	6.3	6.3	6.3	6.3	6.3	6.3	6.3	6.3	6.3
18		TC	6.8	6.8	6.8	6.8	6.8	6.8	6.8	6.8	6.8	6.8	6.8	6.8	6.8	6.8	6.8
	21	SHC	3.5	3.5	3.5	3.5	3.5	3.5	3.5	3.5	3.5	3.5	3.5	3.5	3.5	3.5	3.5
	23	SHC	4.2	4.2	4.2	4.2	4.2	4.2	4.2	4.2	4.2	4.2	4.2	4.2	4.2	4.2	4.2
	25	SHC	4.8	4.8	4.8	4.8	4.8	4.8	4.8	4.8	4.8	4.8	4.8	4.8	4.8	4.8	4.8
	27	SHC	5.5	5.5	5.5	5.5	5.5	5.5	5.5	5.5	5.5	5.5	5.5	5.5	5.5	5.5	5.5
	29	SHC	6.1	6.1	6.1	6.1	6.1	6.1	6.1	6.1	6.1	6.1	6.1	6.1	6.1	6.1	6.1
	31	SHC	6.8	6.8	6.8	6.8	6.8	6.8	6.8	6.8	6.8	6.8	6.8	6.8	6.8	6.8	6.8
19		TC	7.3	7.3	7.3	7.3	7.3	7.3	7.3	7.3	7.3	7.3	7.3	7.3	7.3	7.3	7.3
	21	SHC	3.3	3.3	3.3	3.3	3.3	3.3	3.3	3.3	3.3	3.3	3.3	3.3	3.3	3.3	3.3
	23	SHC	4.0	4.0	4.0	4.0	4.0	4.0	4.0	4.0	4.0	4.0	4.0	4.0	4.0	4.0	4.0
	25	SHC	4.6	4.6	4.6	4.6	4.6	4.6	4.6	4.6	4.6	4.6	4.6	4.6	4.6	4.6	4.6
	27	SHC	5.3	5.3	5.3	5.3	5.3	5.3	5.3	5.3	5.3	5.3	5.3	5.3	5.3	5.3	5.3
	29	SHC	5.9	5.9	5.9	5.9	5.9	5.9	5.9	5.9	5.9	5.9	5.9	5.9	5.9	5.9	5.9
	31	SHC	6.5	6.5	6.5	6.5	6.5	6.5	6.5	6.5	6.5	6.5	6.5	6.5	6.5	6.5	6.5
20		TC	7.8	7.8	7.8	7.8	7.8	7.8	7.8	7.8	7.8	7.8	7.8	7.8	7.8	7.8	7.6
	23	SHC	3.7	3.7	3.7	3.7	3.7	3.7	3.7	3.7	3.7	3.7	3.7	3.7	3.7	3.7	3.7
	25	SHC	4.4	4.4	4.4	4.4	4.4	4.4	4.4	4.4	4.4	4.4	4.4	4.4	4.4	4.4	4.3
	27	SHC	5.0	5.0	5.0	5.0	5.0	5.0	5.0	5.0	5.0	5.0	5.0	5.0	5.0	5.0	5.0
	29	SHC	5.7	5.7	5.7	5.7	5.7	5.7	5.7	5.7	5.7	5.7	5.7	5.7	5.7	5.7	5.6
	31	SHC	6.3	6.3	6.3	6.3	6.3	6.3	6.3	6.3	6.3	6.3	6.3	6.3	6.3	6.3	6.2
21		TC	8.3	8.3	8.3	8.3	8.3	8.3	8.3	8.3	8.3	8.3	8.3	8.3	8.2	7.9	7.8
	23	SHC	3.5	3.5	3.5	3.5	3.5	3.5	3.5	3.5	3.5	3.5	3.5	3.5	3.4	3.3	3.3
	25	SHC	4.1	4.1	4.1	4.1	4.1	4.1	4.1	4.1	4.1	4.1	4.1	4.1	4.1	4.0	3.9
	27	SHC	4.8	4.8	4.8	4.8	4.8	4.8	4.8	4.8	4.8	4.8	4.8	4.8	4.7	4.6	4.6
	29	SHC	5.4	5.4	5.4	5.4	5.4	5.4	5.4	5.4	5.4	5.4	5.4	5.4	5.4	5.3	5.2
	31	SHC	6.1	6.1	6.1	6.1	6.1	6.1	6.1	6.1	6.1	6.1	6.1	6.1	6.0	5.9	5.9
22		TC	8.8	8.8	8.8	8.8	8.8	8.8	8.8	8.8	8.8	8.8	8.8	8.6	8.3	8.1	8.0
	25	SHC	3.9	3.9	3.9	3.9	3.9	3.9	3.9	3.9	3.9	3.9	3.9	3.8	3.7	3.6	3.6
	27	SHC	4.5	4.5	4.5	4.5	4.5	4.5	4.5	4.5	4.5	4.5	4.5	4.4	4.3	4.3	4.2
	29	SHC	5.2	5.2	5.2	5.2	5.2	5.2	5.2	5.2	5.2	5.2	5.2	5.1	5.0	4.9	4.9
	31	SHC	5.8	5.8	5.8	5.8	5.8	5.8	5.8	5.8	5.8	5.8	5.8	5.7	5.6	5.5	5.5
23		TC	9.2	9.2	9.2	9.2	9.2	9.2	9.2	9.2	9.2	9.2	9.0	8.7	8.5	8.2	8.1
	25	SHC	3.6	3.6	3.6	3.6	3.6	3.6	3.6	3.6	3.6	3.6	3.5	3.4	3.3	3.2	3.2
	27	SHC	4.3	4.3	4.3	4.3	4.3	4.3	4.3	4.3	4.3	4.3	4.2	4.1	4.0	3.9	3.8
	29	SHC	4.9	4.9	4.9	4.9	4.9	4.9	4.9	4.9	4.9	4.9	4.8	4.7	4.6	4.5	4.5
	31	SHC	5.6	5.6	5.6	5.6	5.6	5.6	5.6	5.6	5.6	5.6	5.4	5.4	5.3	5.2	5.1

3. Cooling Capacity of Indoor Unit

● S-90MF2E5

Power supply : 220/230/240V 1phase-50,60Hz TC : Total Cooling Capacity (kW) SHC : Sensible Heat Capacity (kW)

This data is when the indoor unit connects with 16HP outdoor unit.

RATING CAPACITY:		9.0 kW AIR FLOW RATE: 25.0 m³/min															
EVAPORATOR		CONDENSER															
AIR INTAKE. TEMP		AMBIENT TEMP. (°C)															
W.B.	D.B.		15	17	19	21	23	25	27	29	31	33	35	37	39	41	43
14		TC	6.0	6.0	6.0	6.0	6.0	6.0	6.0	6.0	6.0	6.0	6.0	6.0	6.0	6.0	6.0
	21	SHC	5.2	5.2	5.2	5.2	5.2	5.2	5.2	5.2	5.2	5.2	5.2	5.2	5.2	5.2	5.2
	23	SHC	5.9	5.9	5.9	5.9	5.9	5.9	5.9	5.9	5.9	5.9	5.9	5.9	5.9	5.9	5.9
	25	SHC	6.0	6.0	6.0	6.0	6.0	6.0	6.0	6.0	6.0	6.0	6.0	6.0	6.0	6.0	6.0
	27	SHC	6.0	6.0	6.0	6.0	6.0	6.0	6.0	6.0	6.0	6.0	6.0	6.0	6.0	6.0	6.0
15		TC	6.6	6.6	6.6	6.6	6.6	6.6	6.6	6.6	6.6	6.6	6.6	6.6	6.6	6.6	6.6
	21	SHC	5.0	5.0	5.0	5.0	5.0	5.0	5.0	5.0	5.0	5.0	5.0	5.0	5.0	5.0	5.0
	23	SHC	5.7	5.7	5.7	5.7	5.7	5.7	5.7	5.7	5.7	5.7	5.7	5.7	5.7	5.7	5.7
	25	SHC	6.5	6.5	6.5	6.5	6.5	6.5	6.5	6.5	6.5	6.5	6.5	6.5	6.5	6.5	6.5
	27	SHC	6.6	6.6	6.6	6.6	6.6	6.6	6.6	6.6	6.6	6.6	6.6	6.6	6.6	6.6	6.6
16		TC	7.2	7.2	7.2	7.2	7.2	7.2	7.2	7.2	7.2	7.2	7.2	7.2	7.2	7.2	7.2
	21	SHC	4.8	4.8	4.8	4.8	4.8	4.8	4.8	4.8	4.8	4.8	4.8	4.8	4.8	4.8	4.8
	23	SHC	5.5	5.5	5.5	5.5	5.5	5.5	5.5	5.5	5.5	5.5	5.5	5.5	5.5	5.5	5.5
	25	SHC	6.3	6.3	6.3	6.3	6.3	6.3	6.3	6.3	6.3	6.3	6.3	6.3	6.3	6.3	6.3
	27	SHC	7.0	7.0	7.0	7.0	7.0	7.0	7.0	7.0	7.0	7.0	7.0	7.0	7.0	7.0	7.0
	29	SHC	7.2	7.2	7.2	7.2	7.2	7.2	7.2	7.2	7.2	7.2	7.2	7.2	7.2	7.2	7.2
17		TC	7.8	7.8	7.8	7.8	7.8	7.8	7.8	7.8	7.8	7.8	7.8	7.8	7.8	7.8	7.8
	21	SHC	4.6	4.6	4.6	4.6	4.6	4.6	4.6	4.6	4.6	4.6	4.6	4.6	4.6	4.6	4.6
	23	SHC	5.3	5.3	5.3	5.3	5.3	5.3	5.3	5.3	5.3	5.3	5.3	5.3	5.3	5.3	5.3
	25	SHC	6.1	6.1	6.1	6.1	6.1	6.1	6.1	6.1	6.1	6.1	6.1	6.1	6.1	6.1	6.1
	27	SHC	6.8	6.8	6.8	6.8	6.8	6.8	6.8	6.8	6.8	6.8	6.8	6.8	6.8	6.8	6.8
	29	SHC	7.5	7.5	7.5	7.5	7.5	7.5	7.5	7.5	7.5	7.5	7.5	7.5	7.5	7.5	7.5
18		TC	8.4	8.4	8.4	8.4	8.4	8.4	8.4	8.4	8.4	8.4	8.4	8.4	8.4	8.4	8.4
	21	SHC	4.3	4.3	4.3	4.3	4.3	4.3	4.3	4.3	4.3	4.3	4.3	4.3	4.3	4.3	4.3
	23	SHC	5.1	5.1	5.1	5.1	5.1	5.1	5.1	5.1	5.1	5.1	5.1	5.1	5.1	5.1	5.1
	25	SHC	5.8	5.8	5.8	5.8	5.8	5.8	5.8	5.8	5.8	5.8	5.8	5.8	5.8	5.8	5.8
	27	SHC	6.6	6.6	6.6	6.6	6.6	6.6	6.6	6.6	6.6	6.6	6.6	6.6	6.6	6.6	6.6
	29	SHC	7.3	7.3	7.3	7.3	7.3	7.3	7.3	7.3	7.3	7.3	7.3	7.3	7.3	7.3	7.3
	31	SHC	8.1	8.1	8.1	8.1	8.1	8.1	8.1	8.1	8.1	8.1	8.1	8.1	8.1	8.1	8.1
19		TC	9.0	9.0	9.0	9.0	9.0	9.0	9.0	9.0	9.0	9.0	9.0	9.0	9.0	9.0	9.0
	21	SHC	4.1	4.1	4.1	4.1	4.1	4.1	4.1	4.1	4.1	4.1	4.1	4.1	4.1	4.1	4.1
	23	SHC	4.8	4.8	4.8	4.8	4.8	4.8	4.8	4.8	4.8	4.8	4.8	4.8	4.8	4.8	4.8
	25	SHC	5.6	5.6	5.6	5.6	5.6	5.6	5.6	5.6	5.6	5.6	5.6	5.6	5.6	5.6	5.6
	27	SHC	6.3	6.3	6.3	6.3	6.3	6.3	6.3	6.3	6.3	6.3	6.3	6.3	6.3	6.3	6.3
	29	SHC	7.1	7.1	7.1	7.1	7.1	7.1	7.1	7.1	7.1	7.1	7.1	7.1	7.1	7.1	7.1
	31	SHC	7.8	7.8	7.8	7.8	7.8	7.8	7.8	7.8	7.8	7.8	7.8	7.8	7.8	7.8	7.8
20		TC	9.6	9.6	9.6	9.6	9.6	9.6	9.6	9.6	9.6	9.6	9.6	9.6	9.6	9.6	9.4
	23	SHC	4.6	4.6	4.6	4.6	4.6	4.6	4.6	4.6	4.6	4.6	4.6	4.6	4.6	4.5	4.5
	25	SHC	5.3	5.3	5.3	5.3	5.3	5.3	5.3	5.3	5.3	5.3	5.3	5.3	5.3	5.3	5.2
	27	SHC	6.1	6.1	6.1	6.1	6.1	6.1	6.1	6.1	6.1	6.1	6.1	6.1	6.1	6.0	6.0
	29	SHC	6.8	6.8	6.8	6.8	6.8	6.8	6.8	6.8	6.8	6.8	6.8	6.8	6.8	6.8	6.7
	31	SHC	7.6	7.6	7.6	7.6	7.6	7.6	7.6	7.6	7.6	7.6	7.6	7.6	7.6	7.5	7.5
21		TC	10.2	10.2	10.2	10.2	10.2	10.2	10.2	10.2	10.2	10.2	10.2	10.2	10.1	9.8	9.6
	23	SHC	4.3	4.3	4.3	4.3	4.3	4.3	4.3	4.3	4.3	4.3	4.3	4.3	4.2	4.1	4.1
	25	SHC	5.0	5.0	5.0	5.0	5.0	5.0	5.0	5.0	5.0	5.0	5.0	5.0	5.0	4.9	4.8
	27	SHC	5.8	5.8	5.8	5.8	5.8	5.8	5.8	5.8	5.8	5.8	5.8	5.8	5.7	5.6	5.5
	29	SHC	6.5	6.5	6.5	6.5	6.5	6.5	6.5	6.5	6.5	6.5	6.5	6.5	6.5	6.4	6.3
	31	SHC	7.3	7.3	7.3	7.3	7.3	7.3	7.3	7.3	7.3	7.3	7.3	7.3	7.2	7.1	7.0
22		TC	10.8	10.8	10.8	10.8	10.8	10.8	10.8	10.8	10.8	10.8	10.8	10.6	10.3	10.0	9.8
	25	SHC	4.7	4.7	4.7	4.7	4.7	4.7	4.7	4.7	4.7	4.7	4.7	4.6	4.5	4.4	4.4
	27	SHC	5.5	5.5	5.5	5.5	5.5	5.5	5.5	5.5	5.5	5.5	5.5	5.4	5.3	5.2	5.1
	29	SHC	6.2	6.2	6.2	6.2	6.2	6.2	6.2	6.2	6.2	6.2	6.2	6.1	6.0	5.9	5.9
	31	SHC	7.0	7.0	7.0	7.0	7.0	7.0	7.0	7.0	7.0	7.0	7.0	6.9	6.8	6.7	6.6
23		TC	11.4	11.4	11.4	11.4	11.4	11.4	11.4	11.4	11.4	11.4	11.1	10.8	10.5	10.2	10.0
	25	SHC	4.4	4.4	4.4	4.4	4.4	4.4	4.4	4.4	4.4	4.4	4.3	4.2	4.1	4.0	3.9
	27	SHC	5.2	5.2	5.2	5.2	5.2	5.2	5.2	5.2	5.2	5.2	5.1	4.9	4.8	4.7	4.7
	29	SHC	5.9	5.9	5.9	5.9	5.9	5.9	5.9	5.9	5.9	5.9	5.8	5.7	5.6	5.5	5.4
	31	SHC	6.7	6.7	6.7	6.7	6.7	6.7	6.7	6.7	6.7	6.7	6.6	6.4	6.3	6.2	6.2

3. Cooling Capacity of Indoor Unit

• S-106MF2E5

Power supply : 220/230/240V 1phase-50,60Hz TC : Total Cooling Capacity (kW) SHC : Sensible Heat Capacity (kW)

This data is when the indoor unit connects with 16HP outdoor unit.

RATING CAPACITY:		10.6 kW	AIR FLOW RATE: 32.0 m³/min														
EVAPORATOR			CONDENSER														
AIR INTAKE. TEMP			AMBIENT TEMP. (°C)														
W.B.	D.B.		15	17	19	21	23	25	27	29	31	33	35	37	39	41	43
14		TC	7.1	7.1	7.1	7.1	7.1	7.1	7.1	7.1	7.1	7.1	7.1	7.1	7.1	7.1	7.1
	21	SHC	6.9	6.9	6.9	6.9	6.9	6.9	6.9	6.9	6.9	6.9	6.9	6.9	6.9	6.9	6.9
	23	SHC	7.1	7.1	7.1	7.1	7.1	7.1	7.1	7.1	7.1	7.1	7.1	7.1	7.1	7.1	7.1
	25	SHC	7.1	7.1	7.1	7.1	7.1	7.1	7.1	7.1	7.1	7.1	7.1	7.1	7.1	7.1	7.1
	27	SHC	7.1	7.1	7.1	7.1	7.1	7.1	7.1	7.1	7.1	7.1	7.1	7.1	7.1	7.1	7.1
15		TC	7.8	7.8	7.8	7.8	7.8	7.8	7.8	7.8	7.8	7.8	7.8	7.8	7.8	7.8	7.8
	21	SHC	6.6	6.6	6.6	6.6	6.6	6.6	6.6	6.6	6.6	6.6	6.6	6.6	6.6	6.6	6.6
	23	SHC	7.7	7.7	7.7	7.7	7.7	7.7	7.7	7.7	7.7	7.7	7.7	7.7	7.7	7.7	7.7
	25	SHC	7.8	7.8	7.8	7.8	7.8	7.8	7.8	7.8	7.8	7.8	7.8	7.8	7.8	7.8	7.8
	27	SHC	7.8	7.8	7.8	7.8	7.8	7.8	7.8	7.8	7.8	7.8	7.8	7.8	7.8	7.8	7.8
16		TC	8.5	8.5	8.5	8.5	8.5	8.5	8.5	8.5	8.5	8.5	8.5	8.5	8.5	8.5	8.5
	21	SHC	6.2	6.2	6.2	6.2	6.2	6.2	6.2	6.2	6.2	6.2	6.2	6.2	6.2	6.2	6.2
	23	SHC	7.3	7.3	7.3	7.3	7.3	7.3	7.3	7.3	7.3	7.3	7.3	7.3	7.3	7.3	7.3
	25	SHC	8.5	8.5	8.5	8.5	8.5	8.5	8.5	8.5	8.5	8.5	8.5	8.5	8.5	8.5	8.5
	27	SHC	8.5	8.5	8.5	8.5	8.5	8.5	8.5	8.5	8.5	8.5	8.5	8.5	8.5	8.5	8.5
	29	SHC	8.5	8.5	8.5	8.5	8.5	8.5	8.5	8.5	8.5	8.5	8.5	8.5	8.5	8.5	8.5
17		TC	9.2	9.2	9.2	9.2	9.2	9.2	9.2	9.2	9.2	9.2	9.2	9.2	9.2	9.2	9.2
	21	SHC	5.8	5.8	5.8	5.8	5.8	5.8	5.8	5.8	5.8	5.8	5.8	5.8	5.8	5.8	5.8
	23	SHC	6.9	6.9	6.9	6.9	6.9	6.9	6.9	6.9	6.9	6.9	6.9	6.9	6.9	6.9	6.9
	25	SHC	8.1	8.1	8.1	8.1	8.1	8.1	8.1	8.1	8.1	8.1	8.1	8.1	8.1	8.1	8.1
	27	SHC	9.2	9.2	9.2	9.2	9.2	9.2	9.2	9.2	9.2	9.2	9.2	9.2	9.2	9.2	9.2
	29	SHC	9.2	9.2	9.2	9.2	9.2	9.2	9.2	9.2	9.2	9.2	9.2	9.2	9.2	9.2	9.2
18		TC	9.9	9.9	9.9	9.9	9.9	9.9	9.9	9.9	9.9	9.9	9.9	9.9	9.9	9.9	9.9
	21	SHC	5.4	5.4	5.4	5.4	5.4	5.4	5.4	5.4	5.4	5.4	5.4	5.4	5.4	5.4	5.4
	23	SHC	6.5	6.5	6.5	6.5	6.5	6.5	6.5	6.5	6.5	6.5	6.5	6.5	6.5	6.5	6.5
	25	SHC	7.6	7.6	7.6	7.6	7.6	7.6	7.6	7.6	7.6	7.6	7.6	7.6	7.6	7.6	7.6
	27	SHC	8.8	8.8	8.8	8.8	8.8	8.8	8.8	8.8	8.8	8.8	8.8	8.8	8.8	8.8	8.8
	29	SHC	9.9	9.9	9.9	9.9	9.9	9.9	9.9	9.9	9.9	9.9	9.9	9.9	9.9	9.9	9.9
	31	SHC	9.9	9.9	9.9	9.9	9.9	9.9	9.9	9.9	9.9	9.9	9.9	9.9	9.9	9.9	9.9
19		TC	10.6	10.6	10.6	10.6	10.6	10.6	10.6	10.6	10.6	10.6	10.6	10.6	10.6	10.6	10.6
	21	SHC	4.9	4.9	4.9	4.9	4.9	4.9	4.9	4.9	4.9	4.9	4.9	4.9	4.9	4.9	4.9
	23	SHC	6.1	6.1	6.1	6.1	6.1	6.1	6.1	6.1	6.1	6.1	6.1	6.1	6.1	6.1	6.1
	25	SHC	7.2	7.2	7.2	7.2	7.2	7.2	7.2	7.2	7.2	7.2	7.2	7.2	7.2	7.2	7.2
	27	SHC	8.4	8.4	8.4	8.4	8.4	8.4	8.4	8.4	8.4	8.4	8.4	8.4	8.4	8.4	8.4
	29	SHC	9.5	9.5	9.5	9.5	9.5	9.5	9.5	9.5	9.5	9.5	9.5	9.5	9.5	9.5	9.5
	31	SHC	10.6	10.6	10.6	10.6	10.6	10.6	10.6	10.6	10.6	10.6	10.6	10.6	10.6	10.6	10.6
20		TC	11.3	11.3	11.3	11.3	11.3	11.3	11.3	11.3	11.3	11.3	11.3	11.3	11.3	11.3	11.1
	23	SHC	5.6	5.6	5.6	5.6	5.6	5.6	5.6	5.6	5.6	5.6	5.6	5.6	5.6	5.6	5.5
	25	SHC	6.8	6.8	6.8	6.8	6.8	6.8	6.8	6.8	6.8	6.8	6.8	6.8	6.8	6.7	6.7
	27	SHC	7.9	7.9	7.9	7.9	7.9	7.9	7.9	7.9	7.9	7.9	7.9	7.9	7.9	7.9	7.8
	29	SHC	9.0	9.0	9.0	9.0	9.0	9.0	9.0	9.0	9.0	9.0	9.0	9.0	9.0	9.0	9.0
	31	SHC	10.2	10.2	10.2	10.2	10.2	10.2	10.2	10.2	10.2	10.2	10.2	10.2	10.2	10.2	10.1
21		TC	12.0	12.0	12.0	12.0	12.0	12.0	12.0	12.0	12.0	12.0	12.0	12.0	11.8	11.5	11.3
	23	SHC	5.1	5.1	5.1	5.1	5.1	5.1	5.1	5.1	5.1	5.1	5.1	5.1	5.1	4.9	4.9
	25	SHC	6.3	6.3	6.3	6.3	6.3	6.3	6.3	6.3	6.3	6.3	6.3	6.3	6.2	6.1	6.0
	27	SHC	7.4	7.4	7.4	7.4	7.4	7.4	7.4	7.4	7.4	7.4	7.4	7.4	7.4	7.2	7.2
	29	SHC	8.6	8.6	8.6	8.6	8.6	8.6	8.6	8.6	8.6	8.6	8.6	8.6	8.5	8.4	8.3
	31	SHC	9.7	9.7	9.7	9.7	9.7	9.7	9.7	9.7	9.7	9.7	9.7	9.7	9.7	9.5	9.5
22		TC	12.7	12.7	12.7	12.7	12.7	12.7	12.7	12.7	12.7	12.7	12.7	12.4	12.1	11.7	11.6
	25	SHC	5.8	5.8	5.8	5.8	5.8	5.8	5.8	5.8	5.8	5.8	5.8	5.7	5.6	5.5	5.4
	27	SHC	6.9	6.9	6.9	6.9	6.9	6.9	6.9	6.9	6.9	6.9	6.9	6.9	6.7	6.6	6.5
	29	SHC	8.1	8.1	8.1	8.1	8.1	8.1	8.1	8.1	8.1	8.1	8.1	8.0	7.9	7.7	7.7
	31	SHC	9.2	9.2	9.2	9.2	9.2	9.2	9.2	9.2	9.2	9.2	9.2	9.1	9.0	8.9	8.8
23		TC	13.4	13.4	13.4	13.4	13.4	13.4	13.4	13.4	13.4	13.4	13.1	12.7	12.3	12.0	11.8
	25	SHC	5.3	5.3	5.3	5.3	5.3	5.3	5.3	5.3	5.3	5.3	5.2	5.0	4.9	4.8	4.7
	27	SHC	6.5	6.5	6.5	6.5	6.5	6.5	6.5	6.5	6.5	6.5	6.3	6.2	6.1	6.0	5.9
	29	SHC	7.6	7.6	7.6	7.6	7.6	7.6	7.6	7.6	7.6	7.6	7.5	7.3	7.2	7.1	7.0
	31	SHC	8.8	8.8	8.8	8.8	8.8	8.8	8.8	8.8	8.8	8.8	8.6	8.5	8.4	8.2	8.2

3. Cooling Capacity of Indoor Unit

- S-140MF2E5

Power supply : 220/230/240V 1phase-50,60Hz TC : Total Cooling Capacity (kW) SHC : Sensible Heat Capacity (kW)
This data is when the indoor unit connects with 16HP outdoor unit.

RATING CAPACITY:		14.0 kW AIR FLOW RATE:34.0 m³/min															
EVAPORATOR		CONDENSER															
AIR INTAKE. TEMP		AMBIENT TEMP. (°C)															
W.B.	D.B.		15	17	19	21	23	25	27	29	31	33	35	37	39	41	43
14		TC	9.3	9.3	9.3	9.3	9.3	9.3	9.3	9.3	9.3	9.3	9.3	9.3	9.3	9.3	9.3
	21	SHC	7.9	7.9	7.9	7.9	7.9	7.9	7.9	7.9	7.9	7.9	7.9	7.9	7.9	7.9	7.9
	23	SHC	9.0	9.0	9.0	9.0	9.0	9.0	9.0	9.0	9.0	9.0	9.0	9.0	9.0	9.0	9.0
	25	SHC	9.3	9.3	9.3	9.3	9.3	9.3	9.3	9.3	9.3	9.3	9.3	9.3	9.3	9.3	9.3
	27	SHC	9.3	9.3	9.3	9.3	9.3	9.3	9.3	9.3	9.3	9.3	9.3	9.3	9.3	9.3	9.3
15		TC	10.3	10.3	10.3	10.3	10.3	10.3	10.3	10.3	10.3	10.3	10.3	10.3	10.3	10.3	10.3
	21	SHC	7.6	7.6	7.6	7.6	7.6	7.6	7.6	7.6	7.6	7.6	7.6	7.6	7.6	7.6	7.6
	23	SHC	8.8	8.8	8.8	8.8	8.8	8.8	8.8	8.8	8.8	8.8	8.8	8.8	8.8	8.8	8.8
	25	SHC	9.9	9.9	9.9	9.9	9.9	9.9	9.9	9.9	9.9	9.9	9.9	9.9	9.9	9.9	9.9
	27	SHC	10.3	10.3	10.3	10.3	10.3	10.3	10.3	10.3	10.3	10.3	10.3	10.3	10.3	10.3	10.3
16		TC	11.2	11.2	11.2	11.2	11.2	11.2	11.2	11.2	11.2	11.2	11.2	11.2	11.2	11.2	11.2
	21	SHC	7.4	7.4	7.4	7.4	7.4	7.4	7.4	7.4	7.4	7.4	7.4	7.4	7.4	7.4	7.4
	23	SHC	8.5	8.5	8.5	8.5	8.5	8.5	8.5	8.5	8.5	8.5	8.5	8.5	8.5	8.5	8.5
	25	SHC	9.6	9.6	9.6	9.6	9.6	9.6	9.6	9.6	9.6	9.6	9.6	9.6	9.6	9.6	9.6
	27	SHC	10.7	10.7	10.7	10.7	10.7	10.7	10.7	10.7	10.7	10.7	10.7	10.7	10.7	10.7	10.7
	29	SHC	11.2	11.2	11.2	11.2	11.2	11.2	11.2	11.2	11.2	11.2	11.2	11.2	11.2	11.2	11.2
17		TC	12.1	12.1	12.1	12.1	12.1	12.1	12.1	12.1	12.1	12.1	12.1	12.1	12.1	12.1	12.1
	21	SHC	7.0	7.0	7.0	7.0	7.0	7.0	7.0	7.0	7.0	7.0	7.0	7.0	7.0	7.0	7.0
	23	SHC	8.2	8.2	8.2	8.2	8.2	8.2	8.2	8.2	8.2	8.2	8.2	8.2	8.2	8.2	8.2
	25	SHC	9.3	9.3	9.3	9.3	9.3	9.3	9.3	9.3	9.3	9.3	9.3	9.3	9.3	9.3	9.3
	27	SHC	10.4	10.4	10.4	10.4	10.4	10.4	10.4	10.4	10.4	10.4	10.4	10.4	10.4	10.4	10.4
	29	SHC	11.5	11.5	11.5	11.5	11.5	11.5	11.5	11.5	11.5	11.5	11.5	11.5	11.5	11.5	11.5
18		TC	13.1	13.1	13.1	13.1	13.1	13.1	13.1	13.1	13.1	13.1	13.1	13.1	13.1	13.1	13.1
	21	SHC	6.7	6.7	6.7	6.7	6.7	6.7	6.7	6.7	6.7	6.7	6.7	6.7	6.7	6.7	6.7
	23	SHC	7.8	7.8	7.8	7.8	7.8	7.8	7.8	7.8	7.8	7.8	7.8	7.8	7.8	7.8	7.8
	25	SHC	8.9	8.9	8.9	8.9	8.9	8.9	8.9	8.9	8.9	8.9	8.9	8.9	8.9	8.9	8.9
	27	SHC	10.1	10.1	10.1	10.1	10.1	10.1	10.1	10.1	10.1	10.1	10.1	10.1	10.1	10.1	10.1
	29	SHC	11.2	11.2	11.2	11.2	11.2	11.2	11.2	11.2	11.2	11.2	11.2	11.2	11.2	11.2	11.2
	31	SHC	12.3	12.3	12.3	12.3	12.3	12.3	12.3	12.3	12.3	12.3	12.3	12.3	12.3	12.3	12.3
19		TC	14.0	14.0	14.0	14.0	14.0	14.0	14.0	14.0	14.0	14.0	14.0	14.0	14.0	14.0	14.0
	21	SHC	6.4	6.4	6.4	6.4	6.4	6.4	6.4	6.4	6.4	6.4	6.4	6.4	6.4	6.4	6.4
	23	SHC	7.5	7.5	7.5	7.5	7.5	7.5	7.5	7.5	7.5	7.5	7.5	7.5	7.5	7.5	7.5
	25	SHC	8.6	8.6	8.6	8.6	8.6	8.6	8.6	8.6	8.6	8.6	8.6	8.6	8.6	8.6	8.6
	27	SHC	9.7	9.7	9.7	9.7	9.7	9.7	9.7	9.7	9.7	9.7	9.7	9.7	9.7	9.7	9.7
	29	SHC	10.8	10.8	10.8	10.8	10.8	10.8	10.8	10.8	10.8	10.8	10.8	10.8	10.8	10.8	10.8
	31	SHC	11.9	11.9	11.9	11.9	11.9	11.9	11.9	11.9	11.9	11.9	11.9	11.9	11.9	11.9	11.9
20		TC	14.9	14.9	14.9	14.9	14.9	14.9	14.9	14.9	14.9	14.9	14.9	14.9	14.9	14.9	14.6
	23	SHC	7.1	7.1	7.1	7.1	7.1	7.1	7.1	7.1	7.1	7.1	7.1	7.1	7.1	7.1	7.0
	25	SHC	8.2	8.2	8.2	8.2	8.2	8.2	8.2	8.2	8.2	8.2	8.2	8.2	8.2	8.2	8.1
	27	SHC	9.3	9.3	9.3	9.3	9.3	9.3	9.3	9.3	9.3	9.3	9.3	9.3	9.3	9.3	9.2
	29	SHC	10.4	10.4	10.4	10.4	10.4	10.4	10.4	10.4	10.4	10.4	10.4	10.4	10.4	10.4	10.3
	31	SHC	11.6	11.6	11.6	11.6	11.6	11.6	11.6	11.6	11.6	11.6	11.6	11.6	11.6	11.5	11.4
21		TC	15.9	15.9	15.9	15.9	15.9	15.9	15.9	15.9	15.9	15.9	15.9	15.9	15.6	15.2	15.0
	23	SHC	6.7	6.7	6.7	6.7	6.7	6.7	6.7	6.7	6.7	6.7	6.7	6.7	6.6	6.4	6.3
	25	SHC	7.8	7.8	7.8	7.8	7.8	7.8	7.8	7.8	7.8	7.8	7.8	7.8	7.7	7.5	7.4
	27	SHC	8.9	8.9	8.9	8.9	8.9	8.9	8.9	8.9	8.9	8.9	8.9	8.9	8.8	8.6	8.5
	29	SHC	10.0	10.0	10.0	10.0	10.0	10.0	10.0	10.0	10.0	10.0	10.0	10.0	9.9	9.8	9.7
	31	SHC	11.2	11.2	11.2	11.2	11.2	11.2	11.2	11.2	11.2	11.2	11.2	11.2	11.1	10.9	10.8
22		TC	16.8	16.8	16.8	16.8	16.8	16.8	16.8	16.8	16.8	16.8	16.8	16.4	15.9	15.5	15.3
	25	SHC	7.4	7.4	7.4	7.4	7.4	7.4	7.4	7.4	7.4	7.4	7.4	7.2	7.0	6.8	6.8
	27	SHC	8.5	8.5	8.5	8.5	8.5	8.5	8.5	8.5	8.5	8.5	8.5	8.3	8.1	8.0	7.9
	29	SHC	9.6	9.6	9.6	9.6	9.6	9.6	9.6	9.6	9.6	9.6	9.6	9.5	9.3	9.1	9.0
	31	SHC	10.7	10.7	10.7	10.7	10.7	10.7	10.7	10.7	10.7	10.7	10.7	10.6	10.4	10.2	10.1
23		TC	17.7	17.7	17.7	17.7	17.7	17.7	17.7	17.7	17.7	17.7	17.2	16.7	16.3	15.8	15.6
	25	SHC	6.9	6.9	6.9	6.9	6.9	6.9	6.9	6.9	6.9	6.9	6.7	6.5	6.4	6.2	6.1
	27	SHC	8.0	8.0	8.0	8.0	8.0	8.0	8.0	8.0	8.0	8.0	7.9	7.6	7.5	7.3	7.2
	29	SHC	9.2	9.2	9.2	9.2	9.2	9.2	9.2	9.2	9.2	9.2	9.0	8.8	8.6	8.4	8.3
	31	SHC	10.3	10.3	10.3	10.3	10.3	10.3	10.3	10.3	10.3	10.3	10.1	9.9	9.7	9.5	9.5

3. Cooling Capacity of Indoor Unit

• S-160MF2E5

Power supply : 220/230/240V 1phase-50,60Hz TC : Total Cooling Capacity (kW) SHC : Sensible Heat Capacity (kW)

This data is when the indoor unit connects with 16HP outdoor unit.

RATING CAPACITY:		16.0 kW	AIR FLOW RATE: 36.0 m³/min														
EVAPORATOR			CONDENSER														
AIR INTAKE. TEMP			AMBIENT TEMP. (°C)														
W.B.	D.B.		15	17	19	21	23	25	27	29	31	33	35	37	39	41	43
14		TC	10.7	10.7	10.7	10.7	10.7	10.7	10.7	10.7	10.7	10.7	10.7	10.7	10.7	10.7	10.7
	21	SHC	8.5	8.5	8.5	8.5	8.5	8.5	8.5	8.5	8.5	8.5	8.5	8.5	8.5	8.5	8.5
	23	SHC	9.6	9.6	9.6	9.6	9.6	9.6	9.6	9.6	9.6	9.6	9.6	9.6	9.6	9.6	9.6
	25	SHC	10.7	10.7	10.7	10.7	10.7	10.7	10.7	10.7	10.7	10.7	10.7	10.7	10.7	10.7	10.7
	27	SHC	10.7	10.7	10.7	10.7	10.7	10.7	10.7	10.7	10.7	10.7	10.7	10.7	10.7	10.7	10.7
15		TC	11.7	11.7	11.7	11.7	11.7	11.7	11.7	11.7	11.7	11.7	11.7	11.7	11.7	11.7	11.7
	21	SHC	8.3	8.3	8.3	8.3	8.3	8.3	8.3	8.3	8.3	8.3	8.3	8.3	8.3	8.3	8.3
	23	SHC	9.4	9.4	9.4	9.4	9.4	9.4	9.4	9.4	9.4	9.4	9.4	9.4	9.4	9.4	9.4
	25	SHC	10.5	10.5	10.5	10.5	10.5	10.5	10.5	10.5	10.5	10.5	10.5	10.5	10.5	10.5	10.5
	27	SHC	11.6	11.6	11.6	11.6	11.6	11.6	11.6	11.6	11.6	11.6	11.6	11.6	11.6	11.6	11.6
16		TC	12.8	12.8	12.8	12.8	12.8	12.8	12.8	12.8	12.8	12.8	12.8	12.8	12.8	12.8	12.8
	21	SHC	8.1	8.1	8.1	8.1	8.1	8.1	8.1	8.1	8.1	8.1	8.1	8.1	8.1	8.1	8.1
	23	SHC	9.2	9.2	9.2	9.2	9.2	9.2	9.2	9.2	9.2	9.2	9.2	9.2	9.2	9.2	9.2
	25	SHC	10.3	10.3	10.3	10.3	10.3	10.3	10.3	10.3	10.3	10.3	10.3	10.3	10.3	10.3	10.3
	27	SHC	11.4	11.4	11.4	11.4	11.4	11.4	11.4	11.4	11.4	11.4	11.4	11.4	11.4	11.4	11.4
	29	SHC	12.5	12.5	12.5	12.5	12.5	12.5	12.5	12.5	12.5	12.5	12.5	12.5	12.5	12.5	12.5
17		TC	13.9	13.9	13.9	13.9	13.9	13.9	13.9	13.9	13.9	13.9	13.9	13.9	13.9	13.9	13.9
	21	SHC	7.9	7.9	7.9	7.9	7.9	7.9	7.9	7.9	7.9	7.9	7.9	7.9	7.9	7.9	7.9
	23	SHC	9.0	9.0	9.0	9.0	9.0	9.0	9.0	9.0	9.0	9.0	9.0	9.0	9.0	9.0	9.0
	25	SHC	10.0	10.0	10.0	10.0	10.0	10.0	10.0	10.0	10.0	10.0	10.0	10.0	10.0	10.0	10.0
	27	SHC	11.1	11.1	11.1	11.1	11.1	11.1	11.1	11.1	11.1	11.1	11.1	11.1	11.1	11.1	11.1
	29	SHC	12.2	12.2	12.2	12.2	12.2	12.2	12.2	12.2	12.2	12.2	12.2	12.2	12.2	12.2	12.2
18		TC	14.9	14.9	14.9	14.9	14.9	14.9	14.9	14.9	14.9	14.9	14.9	14.9	14.9	14.9	14.9
	21	SHC	7.6	7.6	7.6	7.6	7.6	7.6	7.6	7.6	7.6	7.6	7.6	7.6	7.6	7.6	7.6
	23	SHC	8.7	8.7	8.7	8.7	8.7	8.7	8.7	8.7	8.7	8.7	8.7	8.7	8.7	8.7	8.7
	25	SHC	9.8	9.8	9.8	9.8	9.8	9.8	9.8	9.8	9.8	9.8	9.8	9.8	9.8	9.8	9.8
	27	SHC	10.9	10.9	10.9	10.9	10.9	10.9	10.9	10.9	10.9	10.9	10.9	10.9	10.9	10.9	10.9
	29	SHC	12.0	12.0	12.0	12.0	12.0	12.0	12.0	12.0	12.0	12.0	12.0	12.0	12.0	12.0	12.0
	31	SHC	13.1	13.1	13.1	13.1	13.1	13.1	13.1	13.1	13.1	13.1	13.1	13.1	13.1	13.1	13.1
19		TC	16.0	16.0	16.0	16.0	16.0	16.0	16.0	16.0	16.0	16.0	16.0	16.0	16.0	16.0	16.0
	21	SHC	7.3	7.3	7.3	7.3	7.3	7.3	7.3	7.3	7.3	7.3	7.3	7.3	7.3	7.3	7.3
	23	SHC	8.4	8.4	8.4	8.4	8.4	8.4	8.4	8.4	8.4	8.4	8.4	8.4	8.4	8.4	8.4
	25	SHC	9.5	9.5	9.5	9.5	9.5	9.5	9.5	9.5	9.5	9.5	9.5	9.5	9.5	9.5	9.5
	27	SHC	10.6	10.6	10.6	10.6	10.6	10.6	10.6	10.6	10.6	10.6	10.6	10.6	10.6	10.6	10.6
	29	SHC	11.6	11.6	11.6	11.6	11.6	11.6	11.6	11.6	11.6	11.6	11.6	11.6	11.6	11.6	11.6
	31	SHC	12.8	12.8	12.8	12.8	12.8	12.8	12.8	12.8	12.8	12.8	12.8	12.8	12.8	12.8	12.8
20		TC	17.1	17.1	17.1	17.1	17.1	17.1	17.1	17.1	17.1	17.1	17.1	17.1	17.1	17.0	16.7
	23	SHC	8.0	8.0	8.0	8.0	8.0	8.0	8.0	8.0	8.0	8.0	8.0	8.0	8.0	8.0	7.9
	25	SHC	9.1	9.1	9.1	9.1	9.1	9.1	9.1	9.1	9.1	9.1	9.1	9.1	9.1	9.1	9.0
	27	SHC	10.2	10.2	10.2	10.2	10.2	10.2	10.2	10.2	10.2	10.2	10.2	10.2	10.2	10.2	10.1
	29	SHC	11.3	11.3	11.3	11.3	11.3	11.3	11.3	11.3	11.3	11.3	11.3	11.3	11.3	11.3	11.2
	31	SHC	12.4	12.4	12.4	12.4	12.4	12.4	12.4	12.4	12.4	12.4	12.4	12.4	12.4	12.4	12.3
21		TC	18.1	18.1	18.1	18.1	18.1	18.1	18.1	18.1	18.1	18.1	18.1	18.1	17.9	17.3	17.1
	23	SHC	7.7	7.7	7.7	7.7	7.7	7.7	7.7	7.7	7.7	7.7	7.7	7.7	7.6	7.3	7.2
	25	SHC	8.8	8.8	8.8	8.8	8.8	8.8	8.8	8.8	8.8	8.8	8.8	8.8	8.6	8.4	8.3
	27	SHC	9.9	9.9	9.9	9.9	9.9	9.9	9.9	9.9	9.9	9.9	9.9	9.9	9.7	9.5	9.4
	29	SHC	11.0	11.0	11.0	11.0	11.0	11.0	11.0	11.0	11.0	11.0	11.0	11.0	10.9	10.6	10.5
	31	SHC	12.1	12.1	12.1	12.1	12.1	12.1	12.1	12.1	12.1	12.1	12.1	12.1	12.0	11.7	11.6
22		TC	19.2	19.2	19.2	19.2	19.2	19.2	19.2	19.2	19.2	19.2	19.2	18.8	18.2	17.7	17.4
	25	SHC	8.4	8.4	8.4	8.4	8.4	8.4	8.4	8.4	8.4	8.4	8.4	8.2	8.0	7.7	7.6
	27	SHC	9.5	9.5	9.5	9.5	9.5	9.5	9.5	9.5	9.5	9.5	9.5	9.3	9.1	8.8	8.7
	29	SHC	10.6	10.6	10.6	10.6	10.6	10.6	10.6	10.6	10.6	10.6	10.6	10.4	10.2	10.0	9.8
	31	SHC	11.7	11.7	11.7	11.7	11.7	11.7	11.7	11.7	11.7	11.7	11.7	11.5	11.3	11.0	10.9
23		TC	20.3	20.3	20.3	20.3	20.3	20.3	20.3	20.3	20.3	20.3	19.7	19.1	18.6	18.0	17.8
	25	SHC	8.0	8.0	8.0	8.0	8.0	8.0	8.0	8.0	8.0	8.0	7.7	7.5	7.3	7.1	6.9
	27	SHC	9.1	9.1	9.1	9.1	9.1	9.1	9.1	9.1	9.1	9.1	8.8	8.6	8.4	8.2	8.0
	29	SHC	10.2	10.2	10.2	10.2	10.2	10.2	10.2	10.2	10.2	10.2	9.9	9.7	9.5	9.2	9.2
	31	SHC	11.3	11.3	11.3	11.3	11.3	11.3	11.3	11.3	11.3	11.3	11.0	10.8	10.6	10.3	10.3

3. Cooling Capacity of Indoor Unit

3-10. High Static Pressure Ducted Type (E1 Type)

- S-73ME1E5

Power supply : 220/230/240V 1phase-50,60Hz TC : Total Cooling Capacity (kW) SHC : Sensible Heat Capacity (kW)

This data is when the indoor unit connects with 16HP outdoor unit.

RATING CAPACITY:		7.3 kW AIR FLOW RATE: 23.0 m³/min															
EVAPORATOR		CONDENSER															
AIR INTAKE. TEMP		AMBIENT TEMP. (°C)															
W.B.	D.B.		15	17	19	21	23	25	27	29	31	33	35	37	39	41	43
14		TC	4.9	4.9	4.9	4.9	4.9	4.9	4.9	4.9	4.9	4.9	4.9	4.9	4.9	4.9	4.9
	21	SHC	4.2	4.2	4.2	4.2	4.2	4.2	4.2	4.2	4.2	4.2	4.2	4.2	4.2	4.2	4.2
	23	SHC	4.8	4.8	4.8	4.8	4.8	4.8	4.8	4.8	4.8	4.8	4.8	4.8	4.8	4.8	4.8
	25	SHC	4.9	4.9	4.9	4.9	4.9	4.9	4.9	4.9	4.9	4.9	4.9	4.9	4.9	4.9	4.9
	27	SHC	4.9	4.9	4.9	4.9	4.9	4.9	4.9	4.9	4.9	4.9	4.9	4.9	4.9	4.9	4.9
15		TC	5.4	5.4	5.4	5.4	5.4	5.4	5.4	5.4	5.4	5.4	5.4	5.4	5.4	5.4	5.4
	21	SHC	4.0	4.0	4.0	4.0	4.0	4.0	4.0	4.0	4.0	4.0	4.0	4.0	4.0	4.0	4.0
	23	SHC	4.6	4.6	4.6	4.6	4.6	4.6	4.6	4.6	4.6	4.6	4.6	4.6	4.6	4.6	4.6
	25	SHC	5.2	5.2	5.2	5.2	5.2	5.2	5.2	5.2	5.2	5.2	5.2	5.2	5.2	5.2	5.2
	27	SHC	5.4	5.4	5.4	5.4	5.4	5.4	5.4	5.4	5.4	5.4	5.4	5.4	5.4	5.4	5.4
16		TC	5.8	5.8	5.8	5.8	5.8	5.8	5.8	5.8	5.8	5.8	5.8	5.8	5.8	5.8	5.8
	21	SHC	3.9	3.9	3.9	3.9	3.9	3.9	3.9	3.9	3.9	3.9	3.9	3.9	3.9	3.9	3.9
	23	SHC	4.5	4.5	4.5	4.5	4.5	4.5	4.5	4.5	4.5	4.5	4.5	4.5	4.5	4.5	4.5
	25	SHC	5.1	5.1	5.1	5.1	5.1	5.1	5.1	5.1	5.1	5.1	5.1	5.1	5.1	5.1	5.1
	27	SHC	5.7	5.7	5.7	5.7	5.7	5.7	5.7	5.7	5.7	5.7	5.7	5.7	5.7	5.7	5.7
	29	SHC	5.8	5.8	5.8	5.8	5.8	5.8	5.8	5.8	5.8	5.8	5.8	5.8	5.8	5.8	5.8
17		TC	6.3	6.3	6.3	6.3	6.3	6.3	6.3	6.3	6.3	6.3	6.3	6.3	6.3	6.3	6.3
	21	SHC	3.7	3.7	3.7	3.7	3.7	3.7	3.7	3.7	3.7	3.7	3.7	3.7	3.7	3.7	3.7
	23	SHC	4.3	4.3	4.3	4.3	4.3	4.3	4.3	4.3	4.3	4.3	4.3	4.3	4.3	4.3	4.3
	25	SHC	4.9	4.9	4.9	4.9	4.9	4.9	4.9	4.9	4.9	4.9	4.9	4.9	4.9	4.9	4.9
	27	SHC	5.5	5.5	5.5	5.5	5.5	5.5	5.5	5.5	5.5	5.5	5.5	5.5	5.5	5.5	5.5
	29	SHC	6.1	6.1	6.1	6.1	6.1	6.1	6.1	6.1	6.1	6.1	6.1	6.1	6.1	6.1	6.1
18		TC	6.8	6.8	6.8	6.8	6.8	6.8	6.8	6.8	6.8	6.8	6.8	6.8	6.8	6.8	6.8
	21	SHC	3.5	3.5	3.5	3.5	3.5	3.5	3.5	3.5	3.5	3.5	3.5	3.5	3.5	3.5	3.5
	23	SHC	4.1	4.1	4.1	4.1	4.1	4.1	4.1	4.1	4.1	4.1	4.1	4.1	4.1	4.1	4.1
	25	SHC	4.7	4.7	4.7	4.7	4.7	4.7	4.7	4.7	4.7	4.7	4.7	4.7	4.7	4.7	4.7
	27	SHC	5.3	5.3	5.3	5.3	5.3	5.3	5.3	5.3	5.3	5.3	5.3	5.3	5.3	5.3	5.3
	29	SHC	5.9	5.9	5.9	5.9	5.9	5.9	5.9	5.9	5.9	5.9	5.9	5.9	5.9	5.9	5.9
	31	SHC	6.5	6.5	6.5	6.5	6.5	6.5	6.5	6.5	6.5	6.5	6.5	6.5	6.5	6.5	6.5
19		TC	7.3	7.3	7.3	7.3	7.3	7.3	7.3	7.3	7.3	7.3	7.3	7.3	7.3	7.3	7.3
	21	SHC	3.3	3.3	3.3	3.3	3.3	3.3	3.3	3.3	3.3	3.3	3.3	3.3	3.3	3.3	3.3
	23	SHC	3.9	3.9	3.9	3.9	3.9	3.9	3.9	3.9	3.9	3.9	3.9	3.9	3.9	3.9	3.9
	25	SHC	4.5	4.5	4.5	4.5	4.5	4.5	4.5	4.5	4.5	4.5	4.5	4.5	4.5	4.5	4.5
	27	SHC	5.1	5.1	5.1	5.1	5.1	5.1	5.1	5.1	5.1	5.1	5.1	5.1	5.1	5.1	5.1
	29	SHC	5.7	5.7	5.7	5.7	5.7	5.7	5.7	5.7	5.7	5.7	5.7	5.7	5.7	5.7	5.7
	31	SHC	6.3	6.3	6.3	6.3	6.3	6.3	6.3	6.3	6.3	6.3	6.3	6.3	6.3	6.3	6.3
20		TC	7.8	7.8	7.8	7.8	7.8	7.8	7.8	7.8	7.8	7.8	7.8	7.8	7.8	7.8	7.6
	23	SHC	3.7	3.7	3.7	3.7	3.7	3.7	3.7	3.7	3.7	3.7	3.7	3.7	3.7	3.7	3.6
	25	SHC	4.3	4.3	4.3	4.3	4.3	4.3	4.3	4.3	4.3	4.3	4.3	4.3	4.3	4.3	4.2
	27	SHC	4.9	4.9	4.9	4.9	4.9	4.9	4.9	4.9	4.9	4.9	4.9	4.9	4.9	4.9	4.9
	29	SHC	5.5	5.5	5.5	5.5	5.5	5.5	5.5	5.5	5.5	5.5	5.5	5.5	5.5	5.5	5.5
	31	SHC	6.1	6.1	6.1	6.1	6.1	6.1	6.1	6.1	6.1	6.1	6.1	6.1	6.1	6.1	6.1
21		TC	8.3	8.3	8.3	8.3	8.3	8.3	8.3	8.3	8.3	8.3	8.3	8.3	8.2	7.9	7.8
	23	SHC	3.5	3.5	3.5	3.5	3.5	3.5	3.5	3.5	3.5	3.5	3.5	3.5	3.4	3.3	3.3
	25	SHC	4.1	4.1	4.1	4.1	4.1	4.1	4.1	4.1	4.1	4.1	4.1	4.1	4.0	3.9	3.9
	27	SHC	4.7	4.7	4.7	4.7	4.7	4.7	4.7	4.7	4.7	4.7	4.7	4.7	4.6	4.5	4.5
	29	SHC	5.3	5.3	5.3	5.3	5.3	5.3	5.3	5.3	5.3	5.3	5.3	5.3	5.2	5.2	5.1
	31	SHC	5.9	5.9	5.9	5.9	5.9	5.9	5.9	5.9	5.9	5.9	5.9	5.9	5.9	5.8	5.7
22		TC	8.8	8.8	8.8	8.8	8.8	8.8	8.8	8.8	8.8	8.8	8.8	8.6	8.3	8.1	8.0
	25	SHC	3.8	3.8	3.8	3.8	3.8	3.8	3.8	3.8	3.8	3.8	3.8	3.8	3.7	3.6	3.5
	27	SHC	4.5	4.5	4.5	4.5	4.5	4.5	4.5	4.5	4.5	4.5	4.5	4.4	4.3	4.2	4.1
	29	SHC	5.1	5.1	5.1	5.1	5.1	5.1	5.1	5.1	5.1	5.1	5.1	5.0	4.9	4.8	4.7
	31	SHC	5.7	5.7	5.7	5.7	5.7	5.7	5.7	5.7	5.7	5.7	5.7	5.6	5.5	5.4	5.4
23		TC	9.2	9.2	9.2	9.2	9.2	9.2	9.2	9.2	9.2	9.2	9.0	8.7	8.5	8.2	8.1
	25	SHC	3.6	3.6	3.6	3.6	3.6	3.6	3.6	3.6	3.6	3.6	3.5	3.4	3.3	3.2	3.2
	27	SHC	4.2	4.2	4.2	4.2	4.2	4.2	4.2	4.2	4.2	4.2	4.1	4.0	3.9	3.8	3.8
	29	SHC	4.8	4.8	4.8	4.8	4.8	4.8	4.8	4.8	4.8	4.8	4.7	4.6	4.5	4.4	4.4
	31	SHC	5.4	5.4	5.4	5.4	5.4	5.4	5.4	5.4	5.4	5.4	5.3	5.2	5.1	5.0	5.0

3. Cooling Capacity of Indoor Unit

● S-106ME1E5

Power supply : 220/230/240V 1phase-50,60Hz TC : Total Cooling Capacity (kW) SHC : Sensible Heat Capacity (kW)

This data is when the indoor unit connects with 16HP outdoor unit.

RATING CAPACITY:		10.6 kW	AIR FLOW RATE: 30.0 m³/min														
EVAPORATOR			CONDENSER														
AIR INTAKE. TEMP			AMBIENT TEMP. (°C)														
W.B.	D.B.		15	17	19	21	23	25	27	29	31	33	35	37	39	41	43
14		TC	7.1	7.1	7.1	7.1	7.1	7.1	7.1	7.1	7.1	7.1	7.1	7.1	7.1	7.1	7.1
	21	SHC	6.1	6.1	6.1	6.1	6.1	6.1	6.1	6.1	6.1	6.1	6.1	6.1	6.1	6.1	6.1
	23	SHC	7.0	7.0	7.0	7.0	7.0	7.0	7.0	7.0	7.0	7.0	7.0	7.0	7.0	7.0	7.0
	25	SHC	7.1	7.1	7.1	7.1	7.1	7.1	7.1	7.1	7.1	7.1	7.1	7.1	7.1	7.1	7.1
	27	SHC	7.1	7.1	7.1	7.1	7.1	7.1	7.1	7.1	7.1	7.1	7.1	7.1	7.1	7.1	7.1
15		TC	7.8	7.8	7.8	7.8	7.8	7.8	7.8	7.8	7.8	7.8	7.8	7.8	7.8	7.8	7.8
	21	SHC	5.9	5.9	5.9	5.9	5.9	5.9	5.9	5.9	5.9	5.9	5.9	5.9	5.9	5.9	5.9
	23	SHC	6.8	6.8	6.8	6.8	6.8	6.8	6.8	6.8	6.8	6.8	6.8	6.8	6.8	6.8	6.8
	25	SHC	7.7	7.7	7.7	7.7	7.7	7.7	7.7	7.7	7.7	7.7	7.7	7.7	7.7	7.7	7.7
	27	SHC	7.8	7.8	7.8	7.8	7.8	7.8	7.8	7.8	7.8	7.8	7.8	7.8	7.8	7.8	7.8
16		TC	8.5	8.5	8.5	8.5	8.5	8.5	8.5	8.5	8.5	8.5	8.5	8.5	8.5	8.5	8.5
	21	SHC	5.7	5.7	5.7	5.7	5.7	5.7	5.7	5.7	5.7	5.7	5.7	5.7	5.7	5.7	5.7
	23	SHC	6.6	6.6	6.6	6.6	6.6	6.6	6.6	6.6	6.6	6.6	6.6	6.6	6.6	6.6	6.6
	25	SHC	7.5	7.5	7.5	7.5	7.5	7.5	7.5	7.5	7.5	7.5	7.5	7.5	7.5	7.5	7.5
	27	SHC	8.4	8.4	8.4	8.4	8.4	8.4	8.4	8.4	8.4	8.4	8.4	8.4	8.4	8.4	8.4
	29	SHC	8.5	8.5	8.5	8.5	8.5	8.5	8.5	8.5	8.5	8.5	8.5	8.5	8.5	8.5	8.5
17		TC	9.2	9.2	9.2	9.2	9.2	9.2	9.2	9.2	9.2	9.2	9.2	9.2	9.2	9.2	9.2
	21	SHC	5.4	5.4	5.4	5.4	5.4	5.4	5.4	5.4	5.4	5.4	5.4	5.4	5.4	5.4	5.4
	23	SHC	6.3	6.3	6.3	6.3	6.3	6.3	6.3	6.3	6.3	6.3	6.3	6.3	6.3	6.3	6.3
	25	SHC	7.2	7.2	7.2	7.2	7.2	7.2	7.2	7.2	7.2	7.2	7.2	7.2	7.2	7.2	7.2
	27	SHC	8.1	8.1	8.1	8.1	8.1	8.1	8.1	8.1	8.1	8.1	8.1	8.1	8.1	8.1	8.1
	29	SHC	9.0	9.0	9.0	9.0	9.0	9.0	9.0	9.0	9.0	9.0	9.0	9.0	9.0	9.0	9.0
18		TC	9.9	9.9	9.9	9.9	9.9	9.9	9.9	9.9	9.9	9.9	9.9	9.9	9.9	9.9	9.9
	21	SHC	5.1	5.1	5.1	5.1	5.1	5.1	5.1	5.1	5.1	5.1	5.1	5.1	5.1	5.1	5.1
	23	SHC	6.0	6.0	6.0	6.0	6.0	6.0	6.0	6.0	6.0	6.0	6.0	6.0	6.0	6.0	6.0
	25	SHC	6.9	6.9	6.9	6.9	6.9	6.9	6.9	6.9	6.9	6.9	6.9	6.9	6.9	6.9	6.9
	27	SHC	7.8	7.8	7.8	7.8	7.8	7.8	7.8	7.8	7.8	7.8	7.8	7.8	7.8	7.8	7.8
	29	SHC	8.7	8.7	8.7	8.7	8.7	8.7	8.7	8.7	8.7	8.7	8.7	8.7	8.7	8.7	8.7
	31	SHC	9.6	9.6	9.6	9.6	9.6	9.6	9.6	9.6	9.6	9.6	9.6	9.6	9.6	9.6	9.6
19		TC	10.6	10.6	10.6	10.6	10.6	10.6	10.6	10.6	10.6	10.6	10.6	10.6	10.6	10.6	10.6
	21	SHC	4.8	4.8	4.8	4.8	4.8	4.8	4.8	4.8	4.8	4.8	4.8	4.8	4.8	4.8	4.8
	23	SHC	5.7	5.7	5.7	5.7	5.7	5.7	5.7	5.7	5.7	5.7	5.7	5.7	5.7	5.7	5.7
	25	SHC	6.6	6.6	6.6	6.6	6.6	6.6	6.6	6.6	6.6	6.6	6.6	6.6	6.6	6.6	6.6
	27	SHC	7.5	7.5	7.5	7.5	7.5	7.5	7.5	7.5	7.5	7.5	7.5	7.5	7.5	7.5	7.5
	29	SHC	8.4	8.4	8.4	8.4	8.4	8.4	8.4	8.4	8.4	8.4	8.4	8.4	8.4	8.4	8.4
	31	SHC	9.3	9.3	9.3	9.3	9.3	9.3	9.3	9.3	9.3	9.3	9.3	9.3	9.3	9.3	9.3
20		TC	11.3	11.3	11.3	11.3	11.3	11.3	11.3	11.3	11.3	11.3	11.3	11.3	11.3	11.3	11.1
	23	SHC	5.4	5.4	5.4	5.4	5.4	5.4	5.4	5.4	5.4	5.4	5.4	5.4	5.4	5.4	5.3
	25	SHC	6.3	6.3	6.3	6.3	6.3	6.3	6.3	6.3	6.3	6.3	6.3	6.3	6.3	6.3	6.2
	27	SHC	7.2	7.2	7.2	7.2	7.2	7.2	7.2	7.2	7.2	7.2	7.2	7.2	7.2	7.2	7.1
	29	SHC	8.1	8.1	8.1	8.1	8.1	8.1	8.1	8.1	8.1	8.1	8.1	8.1	8.1	8.1	8.0
	31	SHC	9.0	9.0	9.0	9.0	9.0	9.0	9.0	9.0	9.0	9.0	9.0	9.0	9.0	9.0	8.9
21		TC	12.0	12.0	12.0	12.0	12.0	12.0	12.0	12.0	12.0	12.0	12.0	12.0	11.8	11.5	11.3
	23	SHC	5.1	5.1	5.1	5.1	5.1	5.1	5.1	5.1	5.1	5.1	5.1	5.1	5.0	4.8	4.8
	25	SHC	6.0	6.0	6.0	6.0	6.0	6.0	6.0	6.0	6.0	6.0	6.0	6.0	5.9	5.7	5.7
	27	SHC	6.9	6.9	6.9	6.9	6.9	6.9	6.9	6.9	6.9	6.9	6.9	6.9	6.8	6.6	6.6
	29	SHC	7.8	7.8	7.8	7.8	7.8	7.8	7.8	7.8	7.8	7.8	7.8	7.8	7.7	7.6	7.5
	31	SHC	8.6	8.6	8.6	8.6	8.6	8.6	8.6	8.6	8.6	8.6	8.6	8.6	8.6	8.5	8.4
22		TC	12.7	12.7	12.7	12.7	12.7	12.7	12.7	12.7	12.7	12.7	12.7	12.4	12.1	11.7	11.6
	25	SHC	5.6	5.6	5.6	5.6	5.6	5.6	5.6	5.6	5.6	5.6	5.6	5.5	5.4	5.2	5.1
	27	SHC	6.5	6.5	6.5	6.5	6.5	6.5	6.5	6.5	6.5	6.5	6.5	6.4	6.2	6.1	6.0
	29	SHC	7.4	7.4	7.4	7.4	7.4	7.4	7.4	7.4	7.4	7.4	7.4	7.3	7.2	7.0	7.0
	31	SHC	8.3	8.3	8.3	8.3	8.3	8.3	8.3	8.3	8.3	8.3	8.3	8.2	8.1	7.9	7.8
23		TC	13.4	13.4	13.4	13.4	13.4	13.4	13.4	13.4	13.4	13.4	13.1	12.7	12.3	12.0	11.8
	25	SHC	5.2	5.2	5.2	5.2	5.2	5.2	5.2	5.2	5.2	5.2	5.1	5.0	4.8	4.7	4.6
	27	SHC	6.1	6.1	6.1	6.1	6.1	6.1	6.1	6.1	6.1	6.1	6.0	5.9	5.7	5.6	5.5
	29	SHC	7.0	7.0	7.0	7.0	7.0	7.0	7.0	7.0	7.0	7.0	6.9	6.7	6.6	6.5	6.4
	31	SHC	7.9	7.9	7.9	7.9	7.9	7.9	7.9	7.9	7.9	7.9	7.8	7.7	7.5	7.4	7.3

3. Cooling Capacity of Indoor Unit

- S-140ME1E5

Power supply : 220/230/240V 1phase-50,60Hz TC : Total Cooling Capacity (kW) SHC : Sensible Heat Capacity (kW)

This data is when the indoor unit connects with 16HP outdoor unit.

RATING CAPACITY:		14.0 kW	AIR FLOW RATE: 36.0 m³/min														
EVAPORATOR			CONDENSER														
AIR INTAKE. TEMP			AMBIENT TEMP. (°C)														
W.B.	D.B.		15	17	19	21	23	25	27	29	31	33	35	37	39	41	43
14		TC	9.3	9.3	9.3	9.3	9.3	9.3	9.3	9.3	9.3	9.3	9.3	9.3	9.3	9.3	9.3
	21	SHC	7.6	7.6	7.6	7.6	7.6	7.6	7.6	7.6	7.6	7.6	7.6	7.6	7.6	7.6	7.6
	23	SHC	8.6	8.6	8.6	8.6	8.6	8.6	8.6	8.6	8.6	8.6	8.6	8.6	8.6	8.6	8.6
	25	SHC	9.3	9.3	9.3	9.3	9.3	9.3	9.3	9.3	9.3	9.3	9.3	9.3	9.3	9.3	9.3
	27	SHC	9.3	9.3	9.3	9.3	9.3	9.3	9.3	9.3	9.3	9.3	9.3	9.3	9.3	9.3	9.3
15		TC	10.3	10.3	10.3	10.3	10.3	10.3	10.3	10.3	10.3	10.3	10.3	10.3	10.3	10.3	10.3
	21	SHC	7.4	7.4	7.4	7.4	7.4	7.4	7.4	7.4	7.4	7.4	7.4	7.4	7.4	7.4	7.4
	23	SHC	8.4	8.4	8.4	8.4	8.4	8.4	8.4	8.4	8.4	8.4	8.4	8.4	8.4	8.4	8.4
	25	SHC	9.4	9.4	9.4	9.4	9.4	9.4	9.4	9.4	9.4	9.4	9.4	9.4	9.4	9.4	9.4
	27	SHC	10.3	10.3	10.3	10.3	10.3	10.3	10.3	10.3	10.3	10.3	10.3	10.3	10.3	10.3	10.3
16		TC	11.2	11.2	11.2	11.2	11.2	11.2	11.2	11.2	11.2	11.2	11.2	11.2	11.2	11.2	11.2
	21	SHC	7.1	7.1	7.1	7.1	7.1	7.1	7.1	7.1	7.1	7.1	7.1	7.1	7.1	7.1	7.1
	23	SHC	8.1	8.1	8.1	8.1	8.1	8.1	8.1	8.1	8.1	8.1	8.1	8.1	8.1	8.1	8.1
	25	SHC	9.1	9.1	9.1	9.1	9.1	9.1	9.1	9.1	9.1	9.1	9.1	9.1	9.1	9.1	9.1
	27	SHC	10.1	10.1	10.1	10.1	10.1	10.1	10.1	10.1	10.1	10.1	10.1	10.1	10.1	10.1	10.1
	29	SHC	11.1	11.1	11.1	11.1	11.1	11.1	11.1	11.1	11.1	11.1	11.1	11.1	11.1	11.1	11.1
17		TC	12.1	12.1	12.1	12.1	12.1	12.1	12.1	12.1	12.1	12.1	12.1	12.1	12.1	12.1	12.1
	21	SHC	6.9	6.9	6.9	6.9	6.9	6.9	6.9	6.9	6.9	6.9	6.9	6.9	6.9	6.9	6.9
	23	SHC	7.9	7.9	7.9	7.9	7.9	7.9	7.9	7.9	7.9	7.9	7.9	7.9	7.9	7.9	7.9
	25	SHC	8.9	8.9	8.9	8.9	8.9	8.9	8.9	8.9	8.9	8.9	8.9	8.9	8.9	8.9	8.9
	27	SHC	9.9	9.9	9.9	9.9	9.9	9.9	9.9	9.9	9.9	9.9	9.9	9.9	9.9	9.9	9.9
	29	SHC	10.9	10.9	10.9	10.9	10.9	10.9	10.9	10.9	10.9	10.9	10.9	10.9	10.9	10.9	10.9
18		TC	13.1	13.1	13.1	13.1	13.1	13.1	13.1	13.1	13.1	13.1	13.1	13.1	13.1	13.1	13.1
	21	SHC	6.6	6.6	6.6	6.6	6.6	6.6	6.6	6.6	6.6	6.6	6.6	6.6	6.6	6.6	6.6
	23	SHC	7.6	7.6	7.6	7.6	7.6	7.6	7.6	7.6	7.6	7.6	7.6	7.6	7.6	7.6	7.6
	25	SHC	8.6	8.6	8.6	8.6	8.6	8.6	8.6	8.6	8.6	8.6	8.6	8.6	8.6	8.6	8.6
	27	SHC	9.6	9.6	9.6	9.6	9.6	9.6	9.6	9.6	9.6	9.6	9.6	9.6	9.6	9.6	9.6
	29	SHC	10.6	10.6	10.6	10.6	10.6	10.6	10.6	10.6	10.6	10.6	10.6	10.6	10.6	10.6	10.6
	31	SHC	11.6	11.6	11.6	11.6	11.6	11.6	11.6	11.6	11.6	11.6	11.6	11.6	11.6	11.6	11.6
19		TC	14.0	14.0	14.0	14.0	14.0	14.0	14.0	14.0	14.0	14.0	14.0	14.0	14.0	14.0	14.0
	21	SHC	6.4	6.4	6.4	6.4	6.4	6.4	6.4	6.4	6.4	6.4	6.4	6.4	6.4	6.4	6.4
	23	SHC	7.3	7.3	7.3	7.3	7.3	7.3	7.3	7.3	7.3	7.3	7.3	7.3	7.3	7.3	7.3
	25	SHC	8.3	8.3	8.3	8.3	8.3	8.3	8.3	8.3	8.3	8.3	8.3	8.3	8.3	8.3	8.3
	27	SHC	9.3	9.3	9.3	9.3	9.3	9.3	9.3	9.3	9.3	9.3	9.3	9.3	9.3	9.3	9.3
	29	SHC	10.3	10.3	10.3	10.3	10.3	10.3	10.3	10.3	10.3	10.3	10.3	10.3	10.3	10.3	10.3
	31	SHC	11.3	11.3	11.3	11.3	11.3	11.3	11.3	11.3	11.3	11.3	11.3	11.3	11.3	11.3	11.3
20		TC	14.9	14.9	14.9	14.9	14.9	14.9	14.9	14.9	14.9	14.9	14.9	14.9	14.9	14.9	14.6
	23	SHC	7.0	7.0	7.0	7.0	7.0	7.0	7.0	7.0	7.0	7.0	7.0	7.0	7.0	7.0	6.9
	25	SHC	8.0	8.0	8.0	8.0	8.0	8.0	8.0	8.0	8.0	8.0	8.0	8.0	8.0	8.0	7.9
	27	SHC	9.0	9.0	9.0	9.0	9.0	9.0	9.0	9.0	9.0	9.0	9.0	9.0	9.0	9.0	8.9
	29	SHC	10.0	10.0	10.0	10.0	10.0	10.0	10.0	10.0	10.0	10.0	10.0	10.0	10.0	10.0	9.9
	31	SHC	11.0	11.0	11.0	11.0	11.0	11.0	11.0	11.0	11.0	11.0	11.0	11.0	11.0	11.0	10.9
21		TC	15.9	15.9	15.9	15.9	15.9	15.9	15.9	15.9	15.9	15.9	15.9	15.9	15.6	15.2	15.0
	23	SHC	6.7	6.7	6.7	6.7	6.7	6.7	6.7	6.7	6.7	6.7	6.7	6.7	6.6	6.4	6.3
	25	SHC	7.7	7.7	7.7	7.7	7.7	7.7	7.7	7.7	7.7	7.7	7.7	7.7	7.6	7.4	7.3
	27	SHC	8.7	8.7	8.7	8.7	8.7	8.7	8.7	8.7	8.7	8.7	8.7	8.7	8.6	8.4	8.3
	29	SHC	9.7	9.7	9.7	9.7	9.7	9.7	9.7	9.7	9.7	9.7	9.7	9.7	9.6	9.4	9.3
	31	SHC	10.7	10.7	10.7	10.7	10.7	10.7	10.7	10.7	10.7	10.7	10.7	10.7	10.6	10.4	10.3
22		TC	16.8	16.8	16.8	16.8	16.8	16.8	16.8	16.8	16.8	16.8	16.8	16.4	15.9	15.5	15.3
	25	SHC	7.3	7.3	7.3	7.3	7.3	7.3	7.3	7.3	7.3	7.3	7.3	7.2	7.0	6.8	6.7
	27	SHC	8.3	8.3	8.3	8.3	8.3	8.3	8.3	8.3	8.3	8.3	8.3	8.2	8.0	7.8	7.7
	29	SHC	9.3	9.3	9.3	9.3	9.3	9.3	9.3	9.3	9.3	9.3	9.3	9.2	9.0	8.8	8.7
	31	SHC	10.3	10.3	10.3	10.3	10.3	10.3	10.3	10.3	10.3	10.3	10.3	10.2	10.0	9.8	9.7
23		TC	17.7	17.7	17.7	17.7	17.7	17.7	17.7	17.7	17.7	17.7	17.2	16.7	16.3	15.8	15.6
	25	SHC	7.0	7.0	7.0	7.0	7.0	7.0	7.0	7.0	7.0	7.0	6.8	6.6	6.4	6.2	6.1
	27	SHC	8.0	8.0	8.0	8.0	8.0	8.0	8.0	8.0	8.0	8.0	7.8	7.5	7.4	7.2	7.1
	29	SHC	9.0	9.0	9.0	9.0	9.0	9.0	9.0	9.0	9.0	9.0	8.8	8.5	8.4	8.2	8.1
	31	SHC	10.0	10.0	10.0	10.0	10.0	10.0	10.0	10.0	10.0	10.0	9.8	9.5	9.4	9.2	9.1

3. Cooling Capacity of Indoor Unit

• S-224ME1E5

Power supply : 220/230/240V 1phase-50,60Hz TC : Total Cooling Capacity (kW) SHC : Sensible Heat Capacity (kW)

This data is when the indoor unit connects with 16HP outdoor unit.

RATING CAPACITY:		22.4 kW AIR FLOW RATE:56.0 m³/min															
EVAPORATOR		CONDENSER															
AIR INTAKE. TEMP		AMBIENT TEMP. (°C)															
W.B.	D.B.		15	17	19	21	23	25	27	29	31	33	35	37	39	41	43
14		TC	14.9	14.9	14.9	14.9	14.9	14.9	14.9	14.9	14.9	14.9	14.9	14.9	14.9	14.9	14.9
	21	SHC	11.7	11.7	11.7	11.7	11.7	11.7	11.7	11.7	11.7	11.7	11.7	11.7	11.7	11.7	11.7
	23	SHC	13.2	13.2	13.2	13.2	13.2	13.2	13.2	13.2	13.2	13.2	13.2	13.2	13.2	13.2	13.2
	25	SHC	14.6	14.6	14.6	14.6	14.6	14.6	14.6	14.6	14.6	14.6	14.6	14.6	14.6	14.6	14.6
	27	SHC	14.9	14.9	14.9	14.9	14.9	14.9	14.9	14.9	14.9	14.9	14.9	14.9	14.9	14.9	14.9
15		TC	16.4	16.4	16.4	16.4	16.4	16.4	16.4	16.4	16.4	16.4	16.4	16.4	16.4	16.4	16.4
	21	SHC	11.5	11.5	11.5	11.5	11.5	11.5	11.5	11.5	11.5	11.5	11.5	11.5	11.5	11.5	11.5
	23	SHC	12.9	12.9	12.9	12.9	12.9	12.9	12.9	12.9	12.9	12.9	12.9	12.9	12.9	12.9	12.9
	25	SHC	14.3	14.3	14.3	14.3	14.3	14.3	14.3	14.3	14.3	14.3	14.3	14.3	14.3	14.3	14.3
	27	SHC	15.8	15.8	15.8	15.8	15.8	15.8	15.8	15.8	15.8	15.8	15.8	15.8	15.8	15.8	15.8
16		TC	17.9	17.9	17.9	17.9	17.9	17.9	17.9	17.9	17.9	17.9	17.9	17.9	17.9	17.9	17.9
	21	SHC	11.2	11.2	11.2	11.2	11.2	11.2	11.2	11.2	11.2	11.2	11.2	11.2	11.2	11.2	11.2
	23	SHC	12.7	12.7	12.7	12.7	12.7	12.7	12.7	12.7	12.7	12.7	12.7	12.7	12.7	12.7	12.7
	25	SHC	14.1	14.1	14.1	14.1	14.1	14.1	14.1	14.1	14.1	14.1	14.1	14.1	14.1	14.1	14.1
	27	SHC	15.5	15.5	15.5	15.5	15.5	15.5	15.5	15.5	15.5	15.5	15.5	15.5	15.5	15.5	15.5
	29	SHC	17.0	17.0	17.0	17.0	17.0	17.0	17.0	17.0	17.0	17.0	17.0	17.0	17.0	17.0	17.0
17		TC	19.4	19.4	19.4	19.4	19.4	19.4	19.4	19.4	19.4	19.4	19.4	19.4	19.4	19.4	19.4
	21	SHC	10.9	10.9	10.9	10.9	10.9	10.9	10.9	10.9	10.9	10.9	10.9	10.9	10.9	10.9	10.9
	23	SHC	12.4	12.4	12.4	12.4	12.4	12.4	12.4	12.4	12.4	12.4	12.4	12.4	12.4	12.4	12.4
	25	SHC	13.8	13.8	13.8	13.8	13.8	13.8	13.8	13.8	13.8	13.8	13.8	13.8	13.8	13.8	13.8
	27	SHC	15.3	15.3	15.3	15.3	15.3	15.3	15.3	15.3	15.3	15.3	15.3	15.3	15.3	15.3	15.3
	29	SHC	16.7	16.7	16.7	16.7	16.7	16.7	16.7	16.7	16.7	16.7	16.7	16.7	16.7	16.7	16.7
18		TC	20.9	20.9	20.9	20.9	20.9	20.9	20.9	20.9	20.9	20.9	20.9	20.9	20.9	20.9	20.9
	21	SHC	10.6	10.6	10.6	10.6	10.6	10.6	10.6	10.6	10.6	10.6	10.6	10.6	10.6	10.6	10.6
	23	SHC	12.0	12.0	12.0	12.0	12.0	12.0	12.0	12.0	12.0	12.0	12.0	12.0	12.0	12.0	12.0
	25	SHC	13.5	13.5	13.5	13.5	13.5	13.5	13.5	13.5	13.5	13.5	13.5	13.5	13.5	13.5	13.5
	27	SHC	14.9	14.9	14.9	14.9	14.9	14.9	14.9	14.9	14.9	14.9	14.9	14.9	14.9	14.9	14.9
	29	SHC	16.4	16.4	16.4	16.4	16.4	16.4	16.4	16.4	16.4	16.4	16.4	16.4	16.4	16.4	16.4
	31	SHC	17.8	17.8	17.8	17.8	17.8	17.8	17.8	17.8	17.8	17.8	17.8	17.8	17.8	17.8	17.8
19		TC	22.4	22.4	22.4	22.4	22.4	22.4	22.4	22.4	22.4	22.4	22.4	22.4	22.4	22.4	22.4
	21	SHC	10.2	10.2	10.2	10.2	10.2	10.2	10.2	10.2	10.2	10.2	10.2	10.2	10.2	10.2	10.2
	23	SHC	11.7	11.7	11.7	11.7	11.7	11.7	11.7	11.7	11.7	11.7	11.7	11.7	11.7	11.7	11.7
	25	SHC	13.1	13.1	13.1	13.1	13.1	13.1	13.1	13.1	13.1	13.1	13.1	13.1	13.1	13.1	13.1
	27	SHC	14.5	14.5	14.5	14.5	14.5	14.5	14.5	14.5	14.5	14.5	14.5	14.5	14.5	14.5	14.5
	29	SHC	16.0	16.0	16.0	16.0	16.0	16.0	16.0	16.0	16.0	16.0	16.0	16.0	16.0	16.0	16.0
	31	SHC	17.5	17.5	17.5	17.5	17.5	17.5	17.5	17.5	17.5	17.5	17.5	17.5	17.5	17.5	17.5
20		TC	23.9	23.9	23.9	23.9	23.9	23.9	23.9	23.9	23.9	23.9	23.9	23.9	23.9	23.8	23.4
	23	SHC	11.2	11.2	11.2	11.2	11.2	11.2	11.2	11.2	11.2	11.2	11.2	11.2	11.2	11.2	11.0
	25	SHC	12.7	12.7	12.7	12.7	12.7	12.7	12.7	12.7	12.7	12.7	12.7	12.7	12.7	12.6	12.5
	27	SHC	14.2	14.2	14.2	14.2	14.2	14.2	14.2	14.2	14.2	14.2	14.2	14.2	14.2	14.1	13.9
	29	SHC	15.6	15.6	15.6	15.6	15.6	15.6	15.6	15.6	15.6	15.6	15.6	15.6	15.6	15.5	15.4
	31	SHC	17.1	17.1	17.1	17.1	17.1	17.1	17.1	17.1	17.1	17.1	17.1	17.1	17.1	17.0	16.8
21		TC	25.4	25.4	25.4	25.4	25.4	25.4	25.4	25.4	25.4	25.4	25.4	25.4	25.0	24.3	23.9
	23	SHC	10.8	10.8	10.8	10.8	10.8	10.8	10.8	10.8	10.8	10.8	10.8	10.8	10.6	10.3	10.1
	25	SHC	12.2	12.2	12.2	12.2	12.2	12.2	12.2	12.2	12.2	12.2	12.2	12.2	12.1	11.7	11.6
	27	SHC	13.7	13.7	13.7	13.7	13.7	13.7	13.7	13.7	13.7	13.7	13.7	13.7	13.5	13.2	13.0
	29	SHC	15.1	15.1	15.1	15.1	15.1	15.1	15.1	15.1	15.1	15.1	15.1	15.1	15.0	14.6	14.5
	31	SHC	16.6	16.6	16.6	16.6	16.6	16.6	16.6	16.6	16.6	16.6	16.6	16.6	16.4	16.1	15.9
22		TC	26.9	26.9	26.9	26.9	26.9	26.9	26.9	26.9	26.9	26.9	26.9	26.3	25.5	24.8	24.4
	25	SHC	11.7	11.7	11.7	11.7	11.7	11.7	11.7	11.7	11.7	11.7	11.7	11.5	11.1	10.8	10.7
	27	SHC	13.2	13.2	13.2	13.2	13.2	13.2	13.2	13.2	13.2	13.2	13.2	12.9	12.6	12.3	12.1
	29	SHC	14.7	14.7	14.7	14.7	14.7	14.7	14.7	14.7	14.7	14.7	14.7	14.4	14.1	13.7	13.6
	31	SHC	16.1	16.1	16.1	16.1	16.1	16.1	16.1	16.1	16.1	16.1	16.1	15.8	15.5	15.2	15.0
23		TC	28.4	28.4	28.4	28.4	28.4	28.4	28.4	28.4	28.4	28.4	27.6	26.8	26.0	25.3	24.9
	25	SHC	11.2	11.2	11.2	11.2	11.2	11.2	11.2	11.2	11.2	11.2	10.9	10.5	10.2	9.9	9.8
	27	SHC	12.7	12.7	12.7	12.7	12.7	12.7	12.7	12.7	12.7	12.7	12.4	12.0	11.7	11.4	11.2
	29	SHC	14.2	14.2	14.2	14.2	14.2	14.2	14.2	14.2	14.2	14.2	13.8	13.4	13.1	12.8	12.7
	31	SHC	15.6	15.6	15.6	15.6	15.6	15.6	15.6	15.6	15.6	15.6	15.2	14.9	14.6	14.3	14.1

3. Cooling Capacity of Indoor Unit

- S-280ME1E5

Power supply : 220/230/240V 1phase-50,60Hz TC : Total Cooling Capacity (kW) SHC : Sensible Heat Capacity (kW)
This data is when the indoor unit connects with 16HP outdoor unit.

RATING CAPACITY:		28.0 kW AIR FLOW RATE: 72.0 m³/min																
EVAPORATOR		CONDENSER																
AIR INTAKE. TEMP		AMBIENT TEMP. (°C)																
W.B.	D.B.		15	17	19	21	23	25	27	29	31	33	35	37	39	41	43
14		TC	18.7	18.7	18.7	18.7	18.7	18.7	18.7	18.7	18.7	18.7	18.7	18.7	18.7	18.7	18.7
	21	SHC	14.6	14.6	14.6	14.6	14.6	14.6	14.6	14.6	14.6	14.6	14.6	14.6	14.6	14.6	14.6
	23	SHC	16.4	16.4	16.4	16.4	16.4	16.4	16.4	16.4	16.4	16.4	16.4	16.4	16.4	16.4	16.4
	25	SHC	18.2	18.2	18.2	18.2	18.2	18.2	18.2	18.2	18.2	18.2	18.2	18.2	18.2	18.2	18.2
	27	SHC	18.7	18.7	18.7	18.7	18.7	18.7	18.7	18.7	18.7	18.7	18.7	18.7	18.7	18.7	18.7
15		TC	20.5	20.5	20.5	20.5	20.5	20.5	20.5	20.5	20.5	20.5	20.5	20.5	20.5	20.5	20.5
	21	SHC	14.3	14.3	14.3	14.3	14.3	14.3	14.3	14.3	14.3	14.3	14.3	14.3	14.3	14.3	14.3
	23	SHC	16.1	16.1	16.1	16.1	16.1	16.1	16.1	16.1	16.1	16.1	16.1	16.1	16.1	16.1	16.1
	25	SHC	17.9	17.9	17.9	17.9	17.9	17.9	17.9	17.9	17.9	17.9	17.9	17.9	17.9	17.9	17.9
	27	SHC	19.7	19.7	19.7	19.7	19.7	19.7	19.7	19.7	19.7	19.7	19.7	19.7	19.7	19.7	19.7
16		TC	22.4	22.4	22.4	22.4	22.4	22.4	22.4	22.4	22.4	22.4	22.4	22.4	22.4	22.4	22.4
	21	SHC	14.0	14.0	14.0	14.0	14.0	14.0	14.0	14.0	14.0	14.0	14.0	14.0	14.0	14.0	14.0
	23	SHC	15.8	15.8	15.8	15.8	15.8	15.8	15.8	15.8	15.8	15.8	15.8	15.8	15.8	15.8	15.8
	25	SHC	17.6	17.6	17.6	17.6	17.6	17.6	17.6	17.6	17.6	17.6	17.6	17.6	17.6	17.6	17.6
	27	SHC	19.4	19.4	19.4	19.4	19.4	19.4	19.4	19.4	19.4	19.4	19.4	19.4	19.4	19.4	19.4
	29	SHC	21.2	21.2	21.2	21.2	21.2	21.2	21.2	21.2	21.2	21.2	21.2	21.2	21.2	21.2	21.2
17		TC	24.3	24.3	24.3	24.3	24.3	24.3	24.3	24.3	24.3	24.3	24.3	24.3	24.3	24.3	24.3
	21	SHC	13.6	13.6	13.6	13.6	13.6	13.6	13.6	13.6	13.6	13.6	13.6	13.6	13.6	13.6	13.6
	23	SHC	15.4	15.4	15.4	15.4	15.4	15.4	15.4	15.4	15.4	15.4	15.4	15.4	15.4	15.4	15.4
	25	SHC	17.2	17.2	17.2	17.2	17.2	17.2	17.2	17.2	17.2	17.2	17.2	17.2	17.2	17.2	17.2
	27	SHC	19.1	19.1	19.1	19.1	19.1	19.1	19.1	19.1	19.1	19.1	19.1	19.1	19.1	19.1	19.1
	29	SHC	20.9	20.9	20.9	20.9	20.9	20.9	20.9	20.9	20.9	20.9	20.9	20.9	20.9	20.9	20.9
18		TC	26.1	26.1	26.1	26.1	26.1	26.1	26.1	26.1	26.1	26.1	26.1	26.1	26.1	26.1	26.1
	21	SHC	13.2	13.2	13.2	13.2	13.2	13.2	13.2	13.2	13.2	13.2	13.2	13.2	13.2	13.2	13.2
	23	SHC	15.0	15.0	15.0	15.0	15.0	15.0	15.0	15.0	15.0	15.0	15.0	15.0	15.0	15.0	15.0
	25	SHC	16.8	16.8	16.8	16.8	16.8	16.8	16.8	16.8	16.8	16.8	16.8	16.8	16.8	16.8	16.8
	27	SHC	18.6	18.6	18.6	18.6	18.6	18.6	18.6	18.6	18.6	18.6	18.6	18.6	18.6	18.6	18.6
	29	SHC	20.4	20.4	20.4	20.4	20.4	20.4	20.4	20.4	20.4	20.4	20.4	20.4	20.4	20.4	20.4
	31	SHC	22.2	22.2	22.2	22.2	22.2	22.2	22.2	22.2	22.2	22.2	22.2	22.2	22.2	22.2	22.2
19		TC	28.0	28.0	28.0	28.0	28.0	28.0	28.0	28.0	28.0	28.0	28.0	28.0	28.0	28.0	28.0
	21	SHC	12.8	12.8	12.8	12.8	12.8	12.8	12.8	12.8	12.8	12.8	12.8	12.8	12.8	12.8	12.8
	23	SHC	14.6	14.6	14.6	14.6	14.6	14.6	14.6	14.6	14.6	14.6	14.6	14.6	14.6	14.6	14.6
	25	SHC	16.3	16.3	16.3	16.3	16.3	16.3	16.3	16.3	16.3	16.3	16.3	16.3	16.3	16.3	16.3
	27	SHC	18.2	18.2	18.2	18.2	18.2	18.2	18.2	18.2	18.2	18.2	18.2	18.2	18.2	18.2	18.2
	29	SHC	20.0	20.0	20.0	20.0	20.0	20.0	20.0	20.0	20.0	20.0	20.0	20.0	20.0	20.0	20.0
	31	SHC	21.8	21.8	21.8	21.8	21.8	21.8	21.8	21.8	21.8	21.8	21.8	21.8	21.8	21.8	21.8
20		TC	29.9	29.9	29.9	29.9	29.9	29.9	29.9	29.9	29.9	29.9	29.9	29.9	29.9	29.7	29.3
	23	SHC	14.1	14.1	14.1	14.1	14.1	14.1	14.1	14.1	14.1	14.1	14.1	14.1	14.1	14.0	13.8
	25	SHC	15.8	15.8	15.8	15.8	15.8	15.8	15.8	15.8	15.8	15.8	15.8	15.8	15.8	15.8	15.6
	27	SHC	17.7	17.7	17.7	17.7	17.7	17.7	17.7	17.7	17.7	17.7	17.7	17.7	17.7	17.6	17.4
	29	SHC	19.5	19.5	19.5	19.5	19.5	19.5	19.5	19.5	19.5	19.5	19.5	19.5	19.5	19.4	19.2
	31	SHC	21.3	21.3	21.3	21.3	21.3	21.3	21.3	21.3	21.3	21.3	21.3	21.3	21.3	21.2	21.0
21		TC	31.7	31.7	31.7	31.7	31.7	31.7	31.7	31.7	31.7	31.7	31.7	31.7	31.3	30.4	29.9
	23	SHC	13.5	13.5	13.5	13.5	13.5	13.5	13.5	13.5	13.5	13.5	13.5	13.5	13.3	12.9	12.7
	25	SHC	15.3	15.3	15.3	15.3	15.3	15.3	15.3	15.3	15.3	15.3	15.3	15.3	15.1	14.7	14.5
	27	SHC	17.1	17.1	17.1	17.1	17.1	17.1	17.1	17.1	17.1	17.1	17.1	17.1	16.9	16.5	16.3
	29	SHC	18.9	18.9	18.9	18.9	18.9	18.9	18.9	18.9	18.9	18.9	18.9	18.9	18.7	18.3	18.1
	31	SHC	20.7	20.7	20.7	20.7	20.7	20.7	20.7	20.7	20.7	20.7	20.7	20.7	20.5	20.1	19.9
22		TC	33.6	33.6	33.6	33.6	33.6	33.6	33.6	33.6	33.6	33.6	33.6	32.8	31.9	31.0	30.5
	25	SHC	14.7	14.7	14.7	14.7	14.7	14.7	14.7	14.7	14.7	14.7	14.7	14.3	13.9	13.5	13.3
	27	SHC	16.5	16.5	16.5	16.5	16.5	16.5	16.5	16.5	16.5	16.5	16.5	16.2	15.7	15.3	15.2
	29	SHC	18.3	18.3	18.3	18.3	18.3	18.3	18.3	18.3	18.3	18.3	18.3	18.0	17.5	17.1	17.0
	31	SHC	20.1	20.1	20.1	20.1	20.1	20.1	20.1	20.1	20.1	20.1	20.1	19.8	19.4	19.0	18.8
23		TC	35.5	35.5	35.5	35.5	35.5	35.5	35.5	35.5	35.5	35.5	34.5	33.5	32.5	31.6	31.1
	25	SHC	14.1	14.1	14.1	14.1	14.1	14.1	14.1	14.1	14.1	14.1	13.6	13.2	12.8	12.3	12.2
	27	SHC	15.8	15.8	15.8	15.8	15.8	15.8	15.8	15.8	15.8	15.8	15.4	15.0	14.6	14.2	14.0
	29	SHC	17.7	17.7	17.7	17.7	17.7	17.7	17.7	17.7	17.7	17.7	17.2	16.8	16.4	16.0	15.8
	31	SHC	19.5	19.5	19.5	19.5	19.5	19.5	19.5	19.5	19.5	19.5	19.0	18.6	18.2	17.8	17.6

3. Cooling Capacity of Indoor Unit

- S-224ME1E5A

Power supply : 220/230/240V 1phase-50Hz TC : Total Cooling Capacity (kW) SHC : Sensible Heat Capacity (kW)

This data is when the indoor unit connects with 16HP outdoor unit.

RATING CAPACITY:		22.4 kW AIR FLOW RATE: 72.0 m³/min															
EVAPORATOR AIR INTAKE. TEMP		CONDENSER AMBIENT TEMP. (°C)															
W.B.	D.B.		15	17	19	21	23	25	27	29	31	33	35	37	39	41	43
14		TC	14.9	14.9	14.9	14.9	14.9	14.9	14.9	14.9	14.9	14.9	14.9	14.9	14.9	14.9	14.9
	21	SHC	13.7	13.7	13.7	13.7	13.7	13.7	13.7	13.7	13.7	13.7	13.7	13.7	13.7	13.7	13.7
	23	SHC	14.9	14.9	14.9	14.9	14.9	14.9	14.9	14.9	14.9	14.9	14.9	14.9	14.9	14.9	14.9
	25	SHC	14.9	14.9	14.9	14.9	14.9	14.9	14.9	14.9	14.9	14.9	14.9	14.9	14.9	14.9	14.9
	27	SHC	14.9	14.9	14.9	14.9	14.9	14.9	14.9	14.9	14.9	14.9	14.9	14.9	14.9	14.9	14.9
15		TC	16.4	16.4	16.4	16.4	16.4	16.4	16.4	16.4	16.4	16.4	16.4	16.4	16.4	16.4	16.4
	21	SHC	13.4	13.4	13.4	13.4	13.4	13.4	13.4	13.4	13.4	13.4	13.4	13.4	13.4	13.4	13.4
	23	SHC	15.2	15.2	15.2	15.2	15.2	15.2	15.2	15.2	15.2	15.2	15.2	15.2	15.2	15.2	15.2
	25	SHC	16.4	16.4	16.4	16.4	16.4	16.4	16.4	16.4	16.4	16.4	16.4	16.4	16.4	16.4	16.4
	27	SHC	16.4	16.4	16.4	16.4	16.4	16.4	16.4	16.4	16.4	16.4	16.4	16.4	16.4	16.4	16.4
16		TC	17.9	17.9	17.9	17.9	17.9	17.9	17.9	17.9	17.9	17.9	17.9	17.9	17.9	17.9	17.9
	21	SHC	13.2	13.2	13.2	13.2	13.2	13.2	13.2	13.2	13.2	13.2	13.2	13.2	13.2	13.2	13.2
	23	SHC	14.8	14.8	14.8	14.8	14.8	14.8	14.8	14.8	14.8	14.8	14.8	14.8	14.8	14.8	14.8
	25	SHC	16.5	16.5	16.5	16.5	16.5	16.5	16.5	16.5	16.5	16.5	16.5	16.5	16.5	16.5	16.5
	27	SHC	17.9	17.9	17.9	17.9	17.9	17.9	17.9	17.9	17.9	17.9	17.9	17.9	17.9	17.9	17.9
	29	SHC	17.9	17.9	17.9	17.9	17.9	17.9	17.9	17.9	17.9	17.9	17.9	17.9	17.9	17.9	17.9
17		TC	19.4	19.4	19.4	19.4	19.4	19.4	19.4	19.4	19.4	19.4	19.4	19.4	19.4	19.4	19.4
	21	SHC	12.8	12.8	12.8	12.8	12.8	12.8	12.8	12.8	12.8	12.8	12.8	12.8	12.8	12.8	12.8
	23	SHC	14.5	14.5	14.5	14.5	14.5	14.5	14.5	14.5	14.5	14.5	14.5	14.5	14.5	14.5	14.5
	25	SHC	16.2	16.2	16.2	16.2	16.2	16.2	16.2	16.2	16.2	16.2	16.2	16.2	16.2	16.2	16.2
	27	SHC	17.9	17.9	17.9	17.9	17.9	17.9	17.9	17.9	17.9	17.9	17.9	17.9	17.9	17.9	17.9
	29	SHC	19.4	19.4	19.4	19.4	19.4	19.4	19.4	19.4	19.4	19.4	19.4	19.4	19.4	19.4	19.4
18		TC	20.9	20.9	20.9	20.9	20.9	20.9	20.9	20.9	20.9	20.9	20.9	20.9	20.9	20.9	20.9
	21	SHC	12.4	12.4	12.4	12.4	12.4	12.4	12.4	12.4	12.4	12.4	12.4	12.4	12.4	12.4	12.4
	23	SHC	14.1	14.1	14.1	14.1	14.1	14.1	14.1	14.1	14.1	14.1	14.1	14.1	14.1	14.1	14.1
	25	SHC	15.8	15.8	15.8	15.8	15.8	15.8	15.8	15.8	15.8	15.8	15.8	15.8	15.8	15.8	15.8
	27	SHC	17.5	17.5	17.5	17.5	17.5	17.5	17.5	17.5	17.5	17.5	17.5	17.5	17.5	17.5	17.5
	29	SHC	19.2	19.2	19.2	19.2	19.2	19.2	19.2	19.2	19.2	19.2	19.2	19.2	19.2	19.2	19.2
	31	SHC	20.9	20.9	20.9	20.9	20.9	20.9	20.9	20.9	20.9	20.9	20.9	20.9	20.9	20.9	20.9
19		TC	22.4	22.4	22.4	22.4	22.4	22.4	22.4	22.4	22.4	22.4	22.4	22.4	22.4	22.4	22.4
	21	SHC	11.9	11.9	11.9	11.9	11.9	11.9	11.9	11.9	11.9	11.9	11.9	11.9	11.9	11.9	11.9
	23	SHC	13.7	13.7	13.7	13.7	13.7	13.7	13.7	13.7	13.7	13.7	13.7	13.7	13.7	13.7	13.7
	25	SHC	15.4	15.4	15.4	15.4	15.4	15.4	15.4	15.4	15.4	15.4	15.4	15.4	15.4	15.4	15.4
	27	SHC	17.0	17.0	17.0	17.0	17.0	17.0	17.0	17.0	17.0	17.0	17.0	17.0	17.0	17.0	17.0
	29	SHC	18.8	18.8	18.8	18.8	18.8	18.8	18.8	18.8	18.8	18.8	18.8	18.8	18.8	18.8	18.8
	31	SHC	20.5	20.5	20.5	20.5	20.5	20.5	20.5	20.5	20.5	20.5	20.5	20.5	20.5	20.5	20.5
20		TC	23.9	23.9	23.9	23.9	23.9	23.9	23.9	23.9	23.9	23.9	23.9	23.9	23.9	23.8	23.4
	23	SHC	13.2	13.2	13.2	13.2	13.2	13.2	13.2	13.2	13.2	13.2	13.2	13.2	13.2	13.1	12.9
	25	SHC	14.9	14.9	14.9	14.9	14.9	14.9	14.9	14.9	14.9	14.9	14.9	14.9	14.9	14.8	14.6
	27	SHC	16.6	16.6	16.6	16.6	16.6	16.6	16.6	16.6	16.6	16.6	16.6	16.6	16.6	16.5	16.3
	29	SHC	18.3	18.3	18.3	18.3	18.3	18.3	18.3	18.3	18.3	18.3	18.3	18.3	18.3	18.2	18.0
	31	SHC	20.0	20.0	20.0	20.0	20.0	20.0	20.0	20.0	20.0	20.0	20.0	20.0	20.0	19.9	19.7
21		TC	25.4	25.4	25.4	25.4	25.4	25.4	25.4	25.4	25.4	25.4	25.4	25.4	25.0	24.3	23.9
	23	SHC	12.6	12.6	12.6	12.6	12.6	12.6	12.6	12.6	12.6	12.6	12.6	12.6	12.5	12.1	11.8
	25	SHC	14.3	14.3	14.3	14.3	14.3	14.3	14.3	14.3	14.3	14.3	14.3	14.3	14.2	13.7	13.6
	27	SHC	16.0	16.0	16.0	16.0	16.0	16.0	16.0	16.0	16.0	16.0	16.0	16.0	15.9	15.4	15.3
	29	SHC	17.7	17.7	17.7	17.7	17.7	17.7	17.7	17.7	17.7	17.7	17.7	17.7	17.6	17.2	17.0
	31	SHC	19.5	19.5	19.5	19.5	19.5	19.5	19.5	19.5	19.5	19.5	19.5	19.5	19.3	18.9	18.7
22		TC	26.9	26.9	26.9	26.9	26.9	26.9	26.9	26.9	26.9	26.9	26.9	26.3	25.5	24.8	24.4
	25	SHC	13.8	13.8	13.8	13.8	13.8	13.8	13.8	13.8	13.8	13.8	13.8	13.4	13.0	12.7	12.5
	27	SHC	15.5	15.5	15.5	15.5	15.5	15.5	15.5	15.5	15.5	15.5	15.5	15.2	14.8	14.4	14.2
	29	SHC	17.2	17.2	17.2	17.2	17.2	17.2	17.2	17.2	17.2	17.2	17.2	16.9	16.5	16.1	15.9
	31	SHC	18.9	18.9	18.9	18.9	18.9	18.9	18.9	18.9	18.9	18.9	18.9	18.6	18.2	17.8	17.6
23		TC	28.4	28.4	28.4	28.4	28.4	28.4	28.4	28.4	28.4	28.4	27.6	26.8	26.0	25.3	24.9
	25	SHC	13.1	13.1	13.1	13.1	13.1	13.1	13.1	13.1	13.1	13.1	12.7	12.4	12.0	11.6	11.4
	27	SHC	14.9	14.9	14.9	14.9	14.9	14.9	14.9	14.9	14.9	14.9	14.5	14.1	13.7	13.3	13.1
	29	SHC	16.6	16.6	16.6	16.6	16.6	16.6	16.6	16.6	16.6	16.6	16.2	15.7	15.4	15.0	14.8
	31	SHC	18.3	18.3	18.3	18.3	18.3	18.3	18.3	18.3	18.3	18.3	17.9	17.5	17.1	16.7	16.6

3. Cooling Capacity of Indoor Unit

3-11. Floor Standing Type (P1 Type)

● S-22MP1E5

Power supply : 220/230/240V 1phase-50,60Hz TC : Total Cooling Capacity (kW) SHC : Sensible Heat Capacity (kW)

This data is when the indoor unit connects with 16HP outdoor unit.

RATING CAPACITY:		2.2 kW	AIR FLOW RATE: 7.0 m³/min														
EVAPORATOR			CONDENSER														
AIR INTAKE. TEMP			AMBIENT TEMP. (°C)														
W.B.	D.B.		15	17	19	21	23	25	27	29	31	33	35	37	39	41	43
14		TC	1.5	1.5	1.5	1.5	1.5	1.5	1.5	1.5	1.5	1.5	1.5	1.5	1.5	1.5	1.5
	21	SHC	1.2	1.2	1.2	1.2	1.2	1.2	1.2	1.2	1.2	1.2	1.2	1.2	1.2	1.2	1.2
	23	SHC	1.4	1.4	1.4	1.4	1.4	1.4	1.4	1.4	1.4	1.4	1.4	1.4	1.4	1.4	1.4
	25	SHC	1.5	1.5	1.5	1.5	1.5	1.5	1.5	1.5	1.5	1.5	1.5	1.5	1.5	1.5	1.5
	27	SHC	1.5	1.5	1.5	1.5	1.5	1.5	1.5	1.5	1.5	1.5	1.5	1.5	1.5	1.5	1.5
15		TC	1.6	1.6	1.6	1.6	1.6	1.6	1.6	1.6	1.6	1.6	1.6	1.6	1.6	1.6	1.6
	21	SHC	1.2	1.2	1.2	1.2	1.2	1.2	1.2	1.2	1.2	1.2	1.2	1.2	1.2	1.2	1.2
	23	SHC	1.3	1.3	1.3	1.3	1.3	1.3	1.3	1.3	1.3	1.3	1.3	1.3	1.3	1.3	1.3
	25	SHC	1.5	1.5	1.5	1.5	1.5	1.5	1.5	1.5	1.5	1.5	1.5	1.5	1.5	1.5	1.5
	27	SHC	1.6	1.6	1.6	1.6	1.6	1.6	1.6	1.6	1.6	1.6	1.6	1.6	1.6	1.6	1.6
16		TC	1.8	1.8	1.8	1.8	1.8	1.8	1.8	1.8	1.8	1.8	1.8	1.8	1.8	1.8	1.8
	21	SHC	1.1	1.1	1.1	1.1	1.1	1.1	1.1	1.1	1.1	1.1	1.1	1.1	1.1	1.1	1.1
	23	SHC	1.3	1.3	1.3	1.3	1.3	1.3	1.3	1.3	1.3	1.3	1.3	1.3	1.3	1.3	1.3
	25	SHC	1.5	1.5	1.5	1.5	1.5	1.5	1.5	1.5	1.5	1.5	1.5	1.5	1.5	1.5	1.5
	27	SHC	1.6	1.6	1.6	1.6	1.6	1.6	1.6	1.6	1.6	1.6	1.6	1.6	1.6	1.6	1.6
	29	SHC	1.8	1.8	1.8	1.8	1.8	1.8	1.8	1.8	1.8	1.8	1.8	1.8	1.8	1.8	1.8
17		TC	1.9	1.9	1.9	1.9	1.9	1.9	1.9	1.9	1.9	1.9	1.9	1.9	1.9	1.9	1.9
	21	SHC	1.1	1.1	1.1	1.1	1.1	1.1	1.1	1.1	1.1	1.1	1.1	1.1	1.1	1.1	1.1
	23	SHC	1.3	1.3	1.3	1.3	1.3	1.3	1.3	1.3	1.3	1.3	1.3	1.3	1.3	1.3	1.3
	25	SHC	1.4	1.4	1.4	1.4	1.4	1.4	1.4	1.4	1.4	1.4	1.4	1.4	1.4	1.4	1.4
	27	SHC	1.6	1.6	1.6	1.6	1.6	1.6	1.6	1.6	1.6	1.6	1.6	1.6	1.6	1.6	1.6
	29	SHC	1.8	1.8	1.8	1.8	1.8	1.8	1.8	1.8	1.8	1.8	1.8	1.8	1.8	1.8	1.8
18		TC	2.1	2.1	2.1	2.1	2.1	2.1	2.1	2.1	2.1	2.1	2.1	2.1	2.1	2.1	2.1
	21	SHC	1.0	1.0	1.0	1.0	1.0	1.0	1.0	1.0	1.0	1.0	1.0	1.0	1.0	1.0	1.0
	23	SHC	1.2	1.2	1.2	1.2	1.2	1.2	1.2	1.2	1.2	1.2	1.2	1.2	1.2	1.2	1.2
	25	SHC	1.4	1.4	1.4	1.4	1.4	1.4	1.4	1.4	1.4	1.4	1.4	1.4	1.4	1.4	1.4
	27	SHC	1.5	1.5	1.5	1.5	1.5	1.5	1.5	1.5	1.5	1.5	1.5	1.5	1.5	1.5	1.5
	29	SHC	1.7	1.7	1.7	1.7	1.7	1.7	1.7	1.7	1.7	1.7	1.7	1.7	1.7	1.7	1.7
	31	SHC	1.9	1.9	1.9	1.9	1.9	1.9	1.9	1.9	1.9	1.9	1.9	1.9	1.9	1.9	1.9
19		TC	2.2	2.2	2.2	2.2	2.2	2.2	2.2	2.2	2.2	2.2	2.2	2.2	2.2	2.2	2.2
	21	SHC	1.0	1.0	1.0	1.0	1.0	1.0	1.0	1.0	1.0	1.0	1.0	1.0	1.0	1.0	1.0
	23	SHC	1.2	1.2	1.2	1.2	1.2	1.2	1.2	1.2	1.2	1.2	1.2	1.2	1.2	1.2	1.2
	25	SHC	1.3	1.3	1.3	1.3	1.3	1.3	1.3	1.3	1.3	1.3	1.3	1.3	1.3	1.3	1.3
	27	SHC	1.5	1.5	1.5	1.5	1.5	1.5	1.5	1.5	1.5	1.5	1.5	1.5	1.5	1.5	1.5
	29	SHC	1.7	1.7	1.7	1.7	1.7	1.7	1.7	1.7	1.7	1.7	1.7	1.7	1.7	1.7	1.7
	31	SHC	1.8	1.8	1.8	1.8	1.8	1.8	1.8	1.8	1.8	1.8	1.8	1.8	1.8	1.8	1.8
20		TC	2.3	2.3	2.3	2.3	2.3	2.3	2.3	2.3	2.3	2.3	2.3	2.3	2.3	2.3	2.3
	23	SHC	1.1	1.1	1.1	1.1	1.1	1.1	1.1	1.1	1.1	1.1	1.1	1.1	1.1	1.1	1.1
	25	SHC	1.3	1.3	1.3	1.3	1.3	1.3	1.3	1.3	1.3	1.3	1.3	1.3	1.3	1.3	1.3
	27	SHC	1.4	1.4	1.4	1.4	1.4	1.4	1.4	1.4	1.4	1.4	1.4	1.4	1.4	1.4	1.4
	29	SHC	1.6	1.6	1.6	1.6	1.6	1.6	1.6	1.6	1.6	1.6	1.6	1.6	1.6	1.6	1.6
	31	SHC	1.8	1.8	1.8	1.8	1.8	1.8	1.8	1.8	1.8	1.8	1.8	1.8	1.8	1.8	1.8
21		TC	2.5	2.5	2.5	2.5	2.5	2.5	2.5	2.5	2.5	2.5	2.5	2.5	2.5	2.4	2.3
	23	SHC	1.1	1.1	1.1	1.1	1.1	1.1	1.1	1.1	1.1	1.1	1.1	1.1	1.0	1.0	1.0
	25	SHC	1.2	1.2	1.2	1.2	1.2	1.2	1.2	1.2	1.2	1.2	1.2	1.2	1.2	1.2	1.2
	27	SHC	1.4	1.4	1.4	1.4	1.4	1.4	1.4	1.4	1.4	1.4	1.4	1.4	1.4	1.3	1.3
	29	SHC	1.6	1.6	1.6	1.6	1.6	1.6	1.6	1.6	1.6	1.6	1.6	1.6	1.5	1.5	1.5
	31	SHC	1.7	1.7	1.7	1.7	1.7	1.7	1.7	1.7	1.7	1.7	1.7	1.7	1.7	1.7	1.7
22		TC	2.6	2.6	2.6	2.6	2.6	2.6	2.6	2.6	2.6	2.6	2.6	2.6	2.5	2.4	2.4
	25	SHC	1.2	1.2	1.2	1.2	1.2	1.2	1.2	1.2	1.2	1.2	1.2	1.1	1.1	1.1	1.1
	27	SHC	1.3	1.3	1.3	1.3	1.3	1.3	1.3	1.3	1.3	1.3	1.3	1.3	1.3	1.2	1.2
	29	SHC	1.5	1.5	1.5	1.5	1.5	1.5	1.5	1.5	1.5	1.5	1.5	1.5	1.4	1.4	1.4
	31	SHC	1.7	1.7	1.7	1.7	1.7	1.7	1.7	1.7	1.7	1.7	1.7	1.6	1.6	1.6	1.6
23		TC	2.8	2.8	2.8	2.8	2.8	2.8	2.8	2.8	2.8	2.8	2.7	2.6	2.6	2.5	2.4
	25	SHC	1.1	1.1	1.1	1.1	1.1	1.1	1.1	1.1	1.1	1.1	1.1	1.0	1.0	1.0	1.0
	27	SHC	1.3	1.3	1.3	1.3	1.3	1.3	1.3	1.3	1.3	1.3	1.2	1.2	1.2	1.1	1.1
	29	SHC	1.4	1.4	1.4	1.4	1.4	1.4	1.4	1.4	1.4	1.4	1.4	1.4	1.3	1.3	1.3
	31	SHC	1.6	1.6	1.6	1.6	1.6	1.6	1.6	1.6	1.6	1.6	1.6	1.5	1.5	1.5	1.5

3. Cooling Capacity of Indoor Unit

● S-28MP1E5

Power supply : 220/230/240V 1phase-50,60Hz TC : Total Cooling Capacity (kW) SHC : Sensible Heat Capacity (kW)

This data is when the indoor unit connects with 16HP outdoor unit.

RATING CAPACITY:		2.8 kW	AIR FLOW RATE: 7.0 m³/min														
EVAPORATOR			CONDENSER														
AIR INTAKE. TEMP			AMBIENT TEMP. (°C)														
W.B.	D.B.		15	17	19	21	23	25	27	29	31	33	35	37	39	41	43
14		TC	1.9	1.9	1.9	1.9	1.9	1.9	1.9	1.9	1.9	1.9	1.9	1.9	1.9	1.9	1.9
	21	SHC	1.5	1.5	1.5	1.5	1.5	1.5	1.5	1.5	1.5	1.5	1.5	1.5	1.5	1.5	1.5
	23	SHC	1.7	1.7	1.7	1.7	1.7	1.7	1.7	1.7	1.7	1.7	1.7	1.7	1.7	1.7	1.7
	25	SHC	1.9	1.9	1.9	1.9	1.9	1.9	1.9	1.9	1.9	1.9	1.9	1.9	1.9	1.9	1.9
	27	SHC	1.9	1.9	1.9	1.9	1.9	1.9	1.9	1.9	1.9	1.9	1.9	1.9	1.9	1.9	1.9
15		TC	2.1	2.1	2.1	2.1	2.1	2.1	2.1	2.1	2.1	2.1	2.1	2.1	2.1	2.1	2.1
	21	SHC	1.5	1.5	1.5	1.5	1.5	1.5	1.5	1.5	1.5	1.5	1.5	1.5	1.5	1.5	1.5
	23	SHC	1.7	1.7	1.7	1.7	1.7	1.7	1.7	1.7	1.7	1.7	1.7	1.7	1.7	1.7	1.7
	25	SHC	1.9	1.9	1.9	1.9	1.9	1.9	1.9	1.9	1.9	1.9	1.9	1.9	1.9	1.9	1.9
	27	SHC	2.1	2.1	2.1	2.1	2.1	2.1	2.1	2.1	2.1	2.1	2.1	2.1	2.1	2.1	2.1
16		TC	2.2	2.2	2.2	2.2	2.2	2.2	2.2	2.2	2.2	2.2	2.2	2.2	2.2	2.2	2.2
	21	SHC	1.4	1.4	1.4	1.4	1.4	1.4	1.4	1.4	1.4	1.4	1.4	1.4	1.4	1.4	1.4
	23	SHC	1.6	1.6	1.6	1.6	1.6	1.6	1.6	1.6	1.6	1.6	1.6	1.6	1.6	1.6	1.6
	25	SHC	1.8	1.8	1.8	1.8	1.8	1.8	1.8	1.8	1.8	1.8	1.8	1.8	1.8	1.8	1.8
	27	SHC	2.0	2.0	2.0	2.0	2.0	2.0	2.0	2.0	2.0	2.0	2.0	2.0	2.0	2.0	2.0
	29	SHC	2.2	2.2	2.2	2.2	2.2	2.2	2.2	2.2	2.2	2.2	2.2	2.2	2.2	2.2	2.2
17		TC	2.4	2.4	2.4	2.4	2.4	2.4	2.4	2.4	2.4	2.4	2.4	2.4	2.4	2.4	2.4
	21	SHC	1.4	1.4	1.4	1.4	1.4	1.4	1.4	1.4	1.4	1.4	1.4	1.4	1.4	1.4	1.4
	23	SHC	1.6	1.6	1.6	1.6	1.6	1.6	1.6	1.6	1.6	1.6	1.6	1.6	1.6	1.6	1.6
	25	SHC	1.8	1.8	1.8	1.8	1.8	1.8	1.8	1.8	1.8	1.8	1.8	1.8	1.8	1.8	1.8
	27	SHC	2.0	2.0	2.0	2.0	2.0	2.0	2.0	2.0	2.0	2.0	2.0	2.0	2.0	2.0	2.0
	29	SHC	2.2	2.2	2.2	2.2	2.2	2.2	2.2	2.2	2.2	2.2	2.2	2.2	2.2	2.2	2.2
18		TC	2.6	2.6	2.6	2.6	2.6	2.6	2.6	2.6	2.6	2.6	2.6	2.6	2.6	2.6	2.6
	21	SHC	1.3	1.3	1.3	1.3	1.3	1.3	1.3	1.3	1.3	1.3	1.3	1.3	1.3	1.3	1.3
	23	SHC	1.5	1.5	1.5	1.5	1.5	1.5	1.5	1.5	1.5	1.5	1.5	1.5	1.5	1.5	1.5
	25	SHC	1.7	1.7	1.7	1.7	1.7	1.7	1.7	1.7	1.7	1.7	1.7	1.7	1.7	1.7	1.7
	27	SHC	1.9	1.9	1.9	1.9	1.9	1.9	1.9	1.9	1.9	1.9	1.9	1.9	1.9	1.9	1.9
	29	SHC	2.1	2.1	2.1	2.1	2.1	2.1	2.1	2.1	2.1	2.1	2.1	2.1	2.1	2.1	2.1
	31	SHC	2.3	2.3	2.3	2.3	2.3	2.3	2.3	2.3	2.3	2.3	2.3	2.3	2.3	2.3	2.3
19		TC	2.8	2.8	2.8	2.8	2.8	2.8	2.8	2.8	2.8	2.8	2.8	2.8	2.8	2.8	2.8
	21	SHC	1.3	1.3	1.3	1.3	1.3	1.3	1.3	1.3	1.3	1.3	1.3	1.3	1.3	1.3	1.3
	23	SHC	1.5	1.5	1.5	1.5	1.5	1.5	1.5	1.5	1.5	1.5	1.5	1.5	1.5	1.5	1.5
	25	SHC	1.7	1.7	1.7	1.7	1.7	1.7	1.7	1.7	1.7	1.7	1.7	1.7	1.7	1.7	1.7
	27	SHC	1.9	1.9	1.9	1.9	1.9	1.9	1.9	1.9	1.9	1.9	1.9	1.9	1.9	1.9	1.9
	29	SHC	2.1	2.1	2.1	2.1	2.1	2.1	2.1	2.1	2.1	2.1	2.1	2.1	2.1	2.1	2.1
	31	SHC	2.3	2.3	2.3	2.3	2.3	2.3	2.3	2.3	2.3	2.3	2.3	2.3	2.3	2.3	2.3
20		TC	3.0	3.0	3.0	3.0	3.0	3.0	3.0	3.0	3.0	3.0	3.0	3.0	3.0	3.0	2.9
	23	SHC	1.4	1.4	1.4	1.4	1.4	1.4	1.4	1.4	1.4	1.4	1.4	1.4	1.4	1.4	1.4
	25	SHC	1.6	1.6	1.6	1.6	1.6	1.6	1.6	1.6	1.6	1.6	1.6	1.6	1.6	1.6	1.6
	27	SHC	1.8	1.8	1.8	1.8	1.8	1.8	1.8	1.8	1.8	1.8	1.8	1.8	1.8	1.8	1.8
	29	SHC	2.0	2.0	2.0	2.0	2.0	2.0	2.0	2.0	2.0	2.0	2.0	2.0	2.0	2.0	2.0
	31	SHC	2.2	2.2	2.2	2.2	2.2	2.2	2.2	2.2	2.2	2.2	2.2	2.2	2.2	2.2	2.2
21		TC	3.2	3.2	3.2	3.2	3.2	3.2	3.2	3.2	3.2	3.2	3.2	3.2	3.1	3.0	3.0
	23	SHC	1.3	1.3	1.3	1.3	1.3	1.3	1.3	1.3	1.3	1.3	1.3	1.3	1.3	1.3	1.3
	25	SHC	1.5	1.5	1.5	1.5	1.5	1.5	1.5	1.5	1.5	1.5	1.5	1.5	1.5	1.5	1.5
	27	SHC	1.7	1.7	1.7	1.7	1.7	1.7	1.7	1.7	1.7	1.7	1.7	1.7	1.7	1.7	1.7
	29	SHC	1.9	1.9	1.9	1.9	1.9	1.9	1.9	1.9	1.9	1.9	1.9	1.9	1.9	1.9	1.9
	31	SHC	2.2	2.2	2.2	2.2	2.2	2.2	2.2	2.2	2.2	2.2	2.2	2.2	2.1	2.1	2.1
22		TC	3.4	3.4	3.4	3.4	3.4	3.4	3.4	3.4	3.4	3.4	3.4	3.3	3.2	3.1	3.1
	25	SHC	1.5	1.5	1.5	1.5	1.5	1.5	1.5	1.5	1.5	1.5	1.5	1.4	1.4	1.4	1.3
	27	SHC	1.7	1.7	1.7	1.7	1.7	1.7	1.7	1.7	1.7	1.7	1.7	1.6	1.6	1.6	1.5
	29	SHC	1.9	1.9	1.9	1.9	1.9	1.9	1.9	1.9	1.9	1.9	1.9	1.8	1.8	1.8	1.7
	31	SHC	2.1	2.1	2.1	2.1	2.1	2.1	2.1	2.1	2.1	2.1	2.1	2.0	2.0	2.0	2.0
23		TC	3.5	3.5	3.5	3.5	3.5	3.5	3.5	3.5	3.5	3.5	3.4	3.3	3.3	3.2	3.1
	25	SHC	1.4	1.4	1.4	1.4	1.4	1.4	1.4	1.4	1.4	1.4	1.3	1.3	1.3	1.2	1.2
	27	SHC	1.6	1.6	1.6	1.6	1.6	1.6	1.6	1.6	1.6	1.6	1.6	1.5	1.5	1.4	1.4
	29	SHC	1.8	1.8	1.8	1.8	1.8	1.8	1.8	1.8	1.8	1.8	1.8	1.7	1.7	1.6	1.6
	31	SHC	2.0	2.0	2.0	2.0	2.0	2.0	2.0	2.0	2.0	2.0	2.0	1.9	1.9	1.8	1.8

3. Cooling Capacity of Indoor Unit

• S-36MP1E5

Power supply : 220/230/240V 1phase-50,60Hz TC : Total Cooling Capacity (kW) SHC : Sensible Heat Capacity (kW)

This data is when the indoor unit connects with 16HP outdoor unit.

RATING CAPACITY:		3.6 kW	AIR FLOW RATE: 9.0 m³/min														
EVAPORATOR			CONDENSER														
AIR INTAKE. TEMP			AMBIENT TEMP. (°C)														
W.B.	D.B.		15	17	19	21	23	25	27	29	31	33	35	37	39	41	43
14		TC	2.4	2.4	2.4	2.4	2.4	2.4	2.4	2.4	2.4	2.4	2.4	2.4	2.4	2.4	2.4
	21	SHC	1.9	1.9	1.9	1.9	1.9	1.9	1.9	1.9	1.9	1.9	1.9	1.9	1.9	1.9	1.9
	23	SHC	2.2	2.2	2.2	2.2	2.2	2.2	2.2	2.2	2.2	2.2	2.2	2.2	2.2	2.2	2.2
	25	SHC	2.4	2.4	2.4	2.4	2.4	2.4	2.4	2.4	2.4	2.4	2.4	2.4	2.4	2.4	2.4
	27	SHC	2.4	2.4	2.4	2.4	2.4	2.4	2.4	2.4	2.4	2.4	2.4	2.4	2.4	2.4	2.4
15		TC	2.6	2.6	2.6	2.6	2.6	2.6	2.6	2.6	2.6	2.6	2.6	2.6	2.6	2.6	2.6
	21	SHC	1.9	1.9	1.9	1.9	1.9	1.9	1.9	1.9	1.9	1.9	1.9	1.9	1.9	1.9	1.9
	23	SHC	2.1	2.1	2.1	2.1	2.1	2.1	2.1	2.1	2.1	2.1	2.1	2.1	2.1	2.1	2.1
	25	SHC	2.4	2.4	2.4	2.4	2.4	2.4	2.4	2.4	2.4	2.4	2.4	2.4	2.4	2.4	2.4
	27	SHC	2.6	2.6	2.6	2.6	2.6	2.6	2.6	2.6	2.6	2.6	2.6	2.6	2.6	2.6	2.6
16		TC	2.9	2.9	2.9	2.9	2.9	2.9	2.9	2.9	2.9	2.9	2.9	2.9	2.9	2.9	2.9
	21	SHC	1.8	1.8	1.8	1.8	1.8	1.8	1.8	1.8	1.8	1.8	1.8	1.8	1.8	1.8	1.8
	23	SHC	2.1	2.1	2.1	2.1	2.1	2.1	2.1	2.1	2.1	2.1	2.1	2.1	2.1	2.1	2.1
	25	SHC	2.3	2.3	2.3	2.3	2.3	2.3	2.3	2.3	2.3	2.3	2.3	2.3	2.3	2.3	2.3
	27	SHC	2.6	2.6	2.6	2.6	2.6	2.6	2.6	2.6	2.6	2.6	2.6	2.6	2.6	2.6	2.6
	29	SHC	2.9	2.9	2.9	2.9	2.9	2.9	2.9	2.9	2.9	2.9	2.9	2.9	2.9	2.9	2.9
17		TC	3.1	3.1	3.1	3.1	3.1	3.1	3.1	3.1	3.1	3.1	3.1	3.1	3.1	3.1	3.1
	21	SHC	1.8	1.8	1.8	1.8	1.8	1.8	1.8	1.8	1.8	1.8	1.8	1.8	1.8	1.8	1.8
	23	SHC	2.0	2.0	2.0	2.0	2.0	2.0	2.0	2.0	2.0	2.0	2.0	2.0	2.0	2.0	2.0
	25	SHC	2.3	2.3	2.3	2.3	2.3	2.3	2.3	2.3	2.3	2.3	2.3	2.3	2.3	2.3	2.3
	27	SHC	2.5	2.5	2.5	2.5	2.5	2.5	2.5	2.5	2.5	2.5	2.5	2.5	2.5	2.5	2.5
	29	SHC	2.8	2.8	2.8	2.8	2.8	2.8	2.8	2.8	2.8	2.8	2.8	2.8	2.8	2.8	2.8
18		TC	3.4	3.4	3.4	3.4	3.4	3.4	3.4	3.4	3.4	3.4	3.4	3.4	3.4	3.4	3.4
	21	SHC	1.7	1.7	1.7	1.7	1.7	1.7	1.7	1.7	1.7	1.7	1.7	1.7	1.7	1.7	1.7
	23	SHC	2.0	2.0	2.0	2.0	2.0	2.0	2.0	2.0	2.0	2.0	2.0	2.0	2.0	2.0	2.0
	25	SHC	2.2	2.2	2.2	2.2	2.2	2.2	2.2	2.2	2.2	2.2	2.2	2.2	2.2	2.2	2.2
	27	SHC	2.5	2.5	2.5	2.5	2.5	2.5	2.5	2.5	2.5	2.5	2.5	2.5	2.5	2.5	2.5
	29	SHC	2.7	2.7	2.7	2.7	2.7	2.7	2.7	2.7	2.7	2.7	2.7	2.7	2.7	2.7	2.7
	31	SHC	3.0	3.0	3.0	3.0	3.0	3.0	3.0	3.0	3.0	3.0	3.0	3.0	3.0	3.0	3.0
19		TC	3.6	3.6	3.6	3.6	3.6	3.6	3.6	3.6	3.6	3.6	3.6	3.6	3.6	3.6	3.6
	21	SHC	1.6	1.6	1.6	1.6	1.6	1.6	1.6	1.6	1.6	1.6	1.6	1.6	1.6	1.6	1.6
	23	SHC	1.9	1.9	1.9	1.9	1.9	1.9	1.9	1.9	1.9	1.9	1.9	1.9	1.9	1.9	1.9
	25	SHC	2.1	2.1	2.1	2.1	2.1	2.1	2.1	2.1	2.1	2.1	2.1	2.1	2.1	2.1	2.1
	27	SHC	2.4	2.4	2.4	2.4	2.4	2.4	2.4	2.4	2.4	2.4	2.4	2.4	2.4	2.4	2.4
	29	SHC	2.7	2.7	2.7	2.7	2.7	2.7	2.7	2.7	2.7	2.7	2.7	2.7	2.7	2.7	2.7
	31	SHC	2.9	2.9	2.9	2.9	2.9	2.9	2.9	2.9	2.9	2.9	2.9	2.9	2.9	2.9	2.9
20		TC	3.8	3.8	3.8	3.8	3.8	3.8	3.8	3.8	3.8	3.8	3.8	3.8	3.8	3.8	3.8
	23	SHC	1.8	1.8	1.8	1.8	1.8	1.8	1.8	1.8	1.8	1.8	1.8	1.8	1.8	1.8	1.8
	25	SHC	2.1	2.1	2.1	2.1	2.1	2.1	2.1	2.1	2.1	2.1	2.1	2.1	2.1	2.1	2.0
	27	SHC	2.3	2.3	2.3	2.3	2.3	2.3	2.3	2.3	2.3	2.3	2.3	2.3	2.3	2.3	2.3
	29	SHC	2.6	2.6	2.6	2.6	2.6	2.6	2.6	2.6	2.6	2.6	2.6	2.6	2.6	2.6	2.5
	31	SHC	2.8	2.8	2.8	2.8	2.8	2.8	2.8	2.8	2.8	2.8	2.8	2.8	2.8	2.8	2.8
21		TC	4.1	4.1	4.1	4.1	4.1	4.1	4.1	4.1	4.1	4.1	4.1	4.1	4.0	3.9	3.8
	23	SHC	1.7	1.7	1.7	1.7	1.7	1.7	1.7	1.7	1.7	1.7	1.7	1.7	1.7	1.6	1.6
	25	SHC	2.0	2.0	2.0	2.0	2.0	2.0	2.0	2.0	2.0	2.0	2.0	2.0	2.0	1.9	1.9
	27	SHC	2.2	2.2	2.2	2.2	2.2	2.2	2.2	2.2	2.2	2.2	2.2	2.2	2.2	2.2	2.1
	29	SHC	2.5	2.5	2.5	2.5	2.5	2.5	2.5	2.5	2.5	2.5	2.5	2.5	2.5	2.4	2.4
	31	SHC	2.7	2.7	2.7	2.7	2.7	2.7	2.7	2.7	2.7	2.7	2.7	2.7	2.7	2.7	2.6
22		TC	4.3	4.3	4.3	4.3	4.3	4.3	4.3	4.3	4.3	4.3	4.3	4.2	4.1	4.0	3.9
	25	SHC	1.9	1.9	1.9	1.9	1.9	1.9	1.9	1.9	1.9	1.9	1.9	1.8	1.8	1.7	1.7
	27	SHC	2.1	2.1	2.1	2.1	2.1	2.1	2.1	2.1	2.1	2.1	2.1	2.1	2.1	2.0	2.0
	29	SHC	2.4	2.4	2.4	2.4	2.4	2.4	2.4	2.4	2.4	2.4	2.4	2.4	2.3	2.3	2.2
	31	SHC	2.7	2.7	2.7	2.7	2.7	2.7	2.7	2.7	2.7	2.7	2.7	2.6	2.6	2.5	2.5
23		TC	4.6	4.6	4.6	4.6	4.6	4.6	4.6	4.6	4.6	4.6	4.4	4.3	4.2	4.1	4.0
	25	SHC	1.8	1.8	1.8	1.8	1.8	1.8	1.8	1.8	1.8	1.8	1.7	1.7	1.6	1.6	1.6
	27	SHC	2.0	2.0	2.0	2.0	2.0	2.0	2.0	2.0	2.0	2.0	2.0	1.9	1.9	1.8	1.8
	29	SHC	2.3	2.3	2.3	2.3	2.3	2.3	2.3	2.3	2.3	2.3	2.3	2.2	2.1	2.1	2.1
	31	SHC	2.6	2.6	2.6	2.6	2.6	2.6	2.6	2.6	2.6	2.6	2.5	2.5	2.4	2.4	2.3

3. Cooling Capacity of Indoor Unit

● S-45MP1E5

Power supply : 220/230/240V 1phase-50,60Hz TC : Total Cooling Capacity (kW) SHC : Sensible Heat Capacity (kW)

This data is when the indoor unit connects with 16HP outdoor unit.

RATING CAPACITY:		4.5 kW AIR FLOW RATE: 12.0 m³/min																
EVAPORATOR		CONDENSER																
AIR INTAKE. TEMP		AMBIENT TEMP. (°C)																
W.B.	D.B.		15	17	19	21	23	25	27	29	31	33	35	37	39	41	43
14		TC	3.0	3.0	3.0	3.0	3.0	3.0	3.0	3.0	3.0	3.0	3.0	3.0	3.0	3.0	3.0
	21	SHC	2.2	2.2	2.2	2.2	2.2	2.2	2.2	2.2	2.2	2.2	2.2	2.2	2.2	2.2	2.2
	23	SHC	2.4	2.4	2.4	2.4	2.4	2.4	2.4	2.4	2.4	2.4	2.4	2.4	2.4	2.4	2.4
	25	SHC	2.6	2.6	2.6	2.6	2.6	2.6	2.6	2.6	2.6	2.6	2.6	2.6	2.6	2.6	2.6
	27	SHC	2.8	2.8	2.8	2.8	2.8	2.8	2.8	2.8	2.8	2.8	2.8	2.8	2.8	2.8	2.8
15		TC	3.3	3.3	3.3	3.3	3.3	3.3	3.3	3.3	3.3	3.3	3.3	3.3	3.3	3.3	3.3
	21	SHC	2.2	2.2	2.2	2.2	2.2	2.2	2.2	2.2	2.2	2.2	2.2	2.2	2.2	2.2	2.2
	23	SHC	2.4	2.4	2.4	2.4	2.4	2.4	2.4	2.4	2.4	2.4	2.4	2.4	2.4	2.4	2.4
	25	SHC	2.6	2.6	2.6	2.6	2.6	2.6	2.6	2.6	2.6	2.6	2.6	2.6	2.6	2.6	2.6
	27	SHC	2.8	2.8	2.8	2.8	2.8	2.8	2.8	2.8	2.8	2.8	2.8	2.8	2.8	2.8	2.8
16		TC	3.6	3.6	3.6	3.6	3.6	3.6	3.6	3.6	3.6	3.6	3.6	3.6	3.6	3.6	3.6
	21	SHC	2.2	2.2	2.2	2.2	2.2	2.2	2.2	2.2	2.2	2.2	2.2	2.2	2.2	2.2	2.2
	23	SHC	2.4	2.4	2.4	2.4	2.4	2.4	2.4	2.4	2.4	2.4	2.4	2.4	2.4	2.4	2.4
	25	SHC	2.6	2.6	2.6	2.6	2.6	2.6	2.6	2.6	2.6	2.6	2.6	2.6	2.6	2.6	2.6
	27	SHC	2.8	2.8	2.8	2.8	2.8	2.8	2.8	2.8	2.8	2.8	2.8	2.8	2.8	2.8	2.8
	29	SHC	3.0	3.0	3.0	3.0	3.0	3.0	3.0	3.0	3.0	3.0	3.0	3.0	3.0	3.0	3.0
17		TC	3.9	3.9	3.9	3.9	3.9	3.9	3.9	3.9	3.9	3.9	3.9	3.9	3.9	3.9	3.9
	21	SHC	2.2	2.2	2.2	2.2	2.2	2.2	2.2	2.2	2.2	2.2	2.2	2.2	2.2	2.2	2.2
	23	SHC	2.4	2.4	2.4	2.4	2.4	2.4	2.4	2.4	2.4	2.4	2.4	2.4	2.4	2.4	2.4
	25	SHC	2.6	2.6	2.6	2.6	2.6	2.6	2.6	2.6	2.6	2.6	2.6	2.6	2.6	2.6	2.6
	27	SHC	2.8	2.8	2.8	2.8	2.8	2.8	2.8	2.8	2.8	2.8	2.8	2.8	2.8	2.8	2.8
	29	SHC	3.0	3.0	3.0	3.0	3.0	3.0	3.0	3.0	3.0	3.0	3.0	3.0	3.0	3.0	3.0
18		TC	4.2	4.2	4.2	4.2	4.2	4.2	4.2	4.2	4.2	4.2	4.2	4.2	4.2	4.2	4.2
	21	SHC	2.2	2.2	2.2	2.2	2.2	2.2	2.2	2.2	2.2	2.2	2.2	2.2	2.2	2.2	2.2
	23	SHC	2.4	2.4	2.4	2.4	2.4	2.4	2.4	2.4	2.4	2.4	2.4	2.4	2.4	2.4	2.4
	25	SHC	2.6	2.6	2.6	2.6	2.6	2.6	2.6	2.6	2.6	2.6	2.6	2.6	2.6	2.6	2.6
	27	SHC	2.8	2.8	2.8	2.8	2.8	2.8	2.8	2.8	2.8	2.8	2.8	2.8	2.8	2.8	2.8
	29	SHC	3.0	3.0	3.0	3.0	3.0	3.0	3.0	3.0	3.0	3.0	3.0	3.0	3.0	3.0	3.0
	31	SHC	3.2	3.2	3.2	3.2	3.2	3.2	3.2	3.2	3.2	3.2	3.2	3.2	3.2	3.2	3.2
19		TC	4.5	4.5	4.5	4.5	4.5	4.5	4.5	4.5	4.5	4.5	4.5	4.5	4.5	4.5	4.5
	21	SHC	2.1	2.1	2.1	2.1	2.1	2.1	2.1	2.1	2.1	2.1	2.1	2.1	2.1	2.1	2.1
	23	SHC	2.4	2.4	2.4	2.4	2.4	2.4	2.4	2.4	2.4	2.4	2.4	2.4	2.4	2.4	2.4
	25	SHC	2.6	2.6	2.6	2.6	2.6	2.6	2.6	2.6	2.6	2.6	2.6	2.6	2.6	2.6	2.6
	27	SHC	2.8	2.8	2.8	2.8	2.8	2.8	2.8	2.8	2.8	2.8	2.8	2.8	2.8	2.8	2.8
	29	SHC	3.0	3.0	3.0	3.0	3.0	3.0	3.0	3.0	3.0	3.0	3.0	3.0	3.0	3.0	3.0
	31	SHC	3.2	3.2	3.2	3.2	3.2	3.2	3.2	3.2	3.2	3.2	3.2	3.2	3.2	3.2	3.2
20		TC	4.8	4.8	4.8	4.8	4.8	4.8	4.8	4.8	4.8	4.8	4.8	4.8	4.8	4.8	4.7
	23	SHC	2.3	2.3	2.3	2.3	2.3	2.3	2.3	2.3	2.3	2.3	2.3	2.3	2.3	2.3	2.3
	25	SHC	2.5	2.5	2.5	2.5	2.5	2.5	2.5	2.5	2.5	2.5	2.5	2.5	2.5	2.5	2.5
	27	SHC	2.8	2.8	2.8	2.8	2.8	2.8	2.8	2.8	2.8	2.8	2.8	2.8	2.8	2.7	2.7
	29	SHC	3.0	3.0	3.0	3.0	3.0	3.0	3.0	3.0	3.0	3.0	3.0	3.0	3.0	3.0	2.9
	31	SHC	3.2	3.2	3.2	3.2	3.2	3.2	3.2	3.2	3.2	3.2	3.2	3.2	3.2	3.2	3.1
21		TC	5.1	5.1	5.1	5.1	5.1	5.1	5.1	5.1	5.1	5.1	5.1	5.1	5.0	4.9	4.8
	23	SHC	2.3	2.3	2.3	2.3	2.3	2.3	2.3	2.3	2.3	2.3	2.3	2.3	2.2	2.2	2.1
	25	SHC	2.5	2.5	2.5	2.5	2.5	2.5	2.5	2.5	2.5	2.5	2.5	2.5	2.5	2.4	2.3
	27	SHC	2.7	2.7	2.7	2.7	2.7	2.7	2.7	2.7	2.7	2.7	2.7	2.7	2.7	2.6	2.6
	29	SHC	2.9	2.9	2.9	2.9	2.9	2.9	2.9	2.9	2.9	2.9	2.9	2.9	2.9	2.8	2.8
	31	SHC	3.1	3.1	3.1	3.1	3.1	3.1	3.1	3.1	3.1	3.1	3.1	3.1	3.1	3.0	3.0
22		TC	5.4	5.4	5.4	5.4	5.4	5.4	5.4	5.4	5.4	5.4	5.4	5.3	5.1	5.0	4.9
	25	SHC	2.5	2.5	2.5	2.5	2.5	2.5	2.5	2.5	2.5	2.5	2.5	2.4	2.3	2.2	2.2
	27	SHC	2.7	2.7	2.7	2.7	2.7	2.7	2.7	2.7	2.7	2.7	2.7	2.6	2.5	2.4	2.4
	29	SHC	2.9	2.9	2.9	2.9	2.9	2.9	2.9	2.9	2.9	2.9	2.9	2.8	2.7	2.7	2.6
	31	SHC	3.1	3.1	3.1	3.1	3.1	3.1	3.1	3.1	3.1	3.1	3.1	3.0	3.0	2.9	2.8
23		TC	5.7	5.7	5.7	5.7	5.7	5.7	5.7	5.7	5.7	5.7	5.5	5.4	5.2	5.1	5.0
	25	SHC	2.4	2.4	2.4	2.4	2.4	2.4	2.4	2.4	2.4	2.4	2.3	2.2	2.2	2.1	2.0
	27	SHC	2.6	2.6	2.6	2.6	2.6	2.6	2.6	2.6	2.6	2.6	2.5	2.5	2.4	2.3	2.3
	29	SHC	2.8	2.8	2.8	2.8	2.8	2.8	2.8	2.8	2.8	2.8	2.7	2.7	2.6	2.5	2.5
	31	SHC	3.1	3.1	3.1	3.1	3.1	3.1	3.1	3.1	3.1	3.1	3.0	2.9	2.8	2.7	2.7

3. Cooling Capacity of Indoor Unit

● S-56MP1E5

Power supply : 220/230/240V 1phase-50,60Hz TC : Total Cooling Capacity (kW) SHC : Sensible Heat Capacity (kW)

This data is when the indoor unit connects with 16HP outdoor unit.

RATING CAPACITY:		5.6 kW	AIR FLOW RATE: 15.0 m³/min														
EVAPORATOR			CONDENSER														
AIR INTAKE. TEMP			AMBIENT TEMP. (°C)														
W.B.	D.B.		15	17	19	21	23	25	27	29	31	33	35	37	39	41	43
14		TC	3.7	3.7	3.7	3.7	3.7	3.7	3.7	3.7	3.7	3.7	3.7	3.7	3.7	3.7	3.7
	21	SHC	3.1	3.1	3.1	3.1	3.1	3.1	3.1	3.1	3.1	3.1	3.1	3.1	3.1	3.1	3.1
	23	SHC	3.6	3.6	3.6	3.6	3.6	3.6	3.6	3.6	3.6	3.6	3.6	3.6	3.6	3.6	3.6
	25	SHC	3.7	3.7	3.7	3.7	3.7	3.7	3.7	3.7	3.7	3.7	3.7	3.7	3.7	3.7	3.7
	27	SHC	3.7	3.7	3.7	3.7	3.7	3.7	3.7	3.7	3.7	3.7	3.7	3.7	3.7	3.7	3.7
15		TC	4.1	4.1	4.1	4.1	4.1	4.1	4.1	4.1	4.1	4.1	4.1	4.1	4.1	4.1	4.1
	21	SHC	3.0	3.0	3.0	3.0	3.0	3.0	3.0	3.0	3.0	3.0	3.0	3.0	3.0	3.0	3.0
	23	SHC	3.5	3.5	3.5	3.5	3.5	3.5	3.5	3.5	3.5	3.5	3.5	3.5	3.5	3.5	3.5
	25	SHC	3.9	3.9	3.9	3.9	3.9	3.9	3.9	3.9	3.9	3.9	3.9	3.9	3.9	3.9	3.9
	27	SHC	4.1	4.1	4.1	4.1	4.1	4.1	4.1	4.1	4.1	4.1	4.1	4.1	4.1	4.1	4.1
16		TC	4.5	4.5	4.5	4.5	4.5	4.5	4.5	4.5	4.5	4.5	4.5	4.5	4.5	4.5	4.5
	21	SHC	2.9	2.9	2.9	2.9	2.9	2.9	2.9	2.9	2.9	2.9	2.9	2.9	2.9	2.9	2.9
	23	SHC	3.3	3.3	3.3	3.3	3.3	3.3	3.3	3.3	3.3	3.3	3.3	3.3	3.3	3.3	3.3
	25	SHC	3.8	3.8	3.8	3.8	3.8	3.8	3.8	3.8	3.8	3.8	3.8	3.8	3.8	3.8	3.8
	27	SHC	4.2	4.2	4.2	4.2	4.2	4.2	4.2	4.2	4.2	4.2	4.2	4.2	4.2	4.2	4.2
	29	SHC	4.5	4.5	4.5	4.5	4.5	4.5	4.5	4.5	4.5	4.5	4.5	4.5	4.5	4.5	4.5
17		TC	4.9	4.9	4.9	4.9	4.9	4.9	4.9	4.9	4.9	4.9	4.9	4.9	4.9	4.9	4.9
	21	SHC	2.8	2.8	2.8	2.8	2.8	2.8	2.8	2.8	2.8	2.8	2.8	2.8	2.8	2.8	2.8
	23	SHC	3.2	3.2	3.2	3.2	3.2	3.2	3.2	3.2	3.2	3.2	3.2	3.2	3.2	3.2	3.2
	25	SHC	3.7	3.7	3.7	3.7	3.7	3.7	3.7	3.7	3.7	3.7	3.7	3.7	3.7	3.7	3.7
	27	SHC	4.1	4.1	4.1	4.1	4.1	4.1	4.1	4.1	4.1	4.1	4.1	4.1	4.1	4.1	4.1
	29	SHC	4.5	4.5	4.5	4.5	4.5	4.5	4.5	4.5	4.5	4.5	4.5	4.5	4.5	4.5	4.5
18		TC	5.2	5.2	5.2	5.2	5.2	5.2	5.2	5.2	5.2	5.2	5.2	5.2	5.2	5.2	5.2
	21	SHC	2.7	2.7	2.7	2.7	2.7	2.7	2.7	2.7	2.7	2.7	2.7	2.7	2.7	2.7	2.7
	23	SHC	3.1	3.1	3.1	3.1	3.1	3.1	3.1	3.1	3.1	3.1	3.1	3.1	3.1	3.1	3.1
	25	SHC	3.5	3.5	3.5	3.5	3.5	3.5	3.5	3.5	3.5	3.5	3.5	3.5	3.5	3.5	3.5
	27	SHC	4.0	4.0	4.0	4.0	4.0	4.0	4.0	4.0	4.0	4.0	4.0	4.0	4.0	4.0	4.0
	29	SHC	4.4	4.4	4.4	4.4	4.4	4.4	4.4	4.4	4.4	4.4	4.4	4.4	4.4	4.4	4.4
	31	SHC	4.8	4.8	4.8	4.8	4.8	4.8	4.8	4.8	4.8	4.8	4.8	4.8	4.8	4.8	4.8
19		TC	5.6	5.6	5.6	5.6	5.6	5.6	5.6	5.6	5.6	5.6	5.6	5.6	5.6	5.6	5.6
	21	SHC	2.5	2.5	2.5	2.5	2.5	2.5	2.5	2.5	2.5	2.5	2.5	2.5	2.5	2.5	2.5
	23	SHC	3.0	3.0	3.0	3.0	3.0	3.0	3.0	3.0	3.0	3.0	3.0	3.0	3.0	3.0	3.0
	25	SHC	3.4	3.4	3.4	3.4	3.4	3.4	3.4	3.4	3.4	3.4	3.4	3.4	3.4	3.4	3.4
	27	SHC	3.8	3.8	3.8	3.8	3.8	3.8	3.8	3.8	3.8	3.8	3.8	3.8	3.8	3.8	3.8
	29	SHC	4.3	4.3	4.3	4.3	4.3	4.3	4.3	4.3	4.3	4.3	4.3	4.3	4.3	4.3	4.3
	31	SHC	4.7	4.7	4.7	4.7	4.7	4.7	4.7	4.7	4.7	4.7	4.7	4.7	4.7	4.7	4.7
20		TC	6.0	6.0	6.0	6.0	6.0	6.0	6.0	6.0	6.0	6.0	6.0	6.0	6.0	5.9	5.9
	23	SHC	2.8	2.8	2.8	2.8	2.8	2.8	2.8	2.8	2.8	2.8	2.8	2.8	2.8	2.8	2.8
	25	SHC	3.3	3.3	3.3	3.3	3.3	3.3	3.3	3.3	3.3	3.3	3.3	3.3	3.3	3.3	3.2
	27	SHC	3.7	3.7	3.7	3.7	3.7	3.7	3.7	3.7	3.7	3.7	3.7	3.7	3.7	3.7	3.6
	29	SHC	4.1	4.1	4.1	4.1	4.1	4.1	4.1	4.1	4.1	4.1	4.1	4.1	4.1	4.1	4.1
	31	SHC	4.6	4.6	4.6	4.6	4.6	4.6	4.6	4.6	4.6	4.6	4.6	4.6	4.6	4.5	4.5
21		TC	6.3	6.3	6.3	6.3	6.3	6.3	6.3	6.3	6.3	6.3	6.3	6.3	6.3	6.1	6.0
	23	SHC	2.7	2.7	2.7	2.7	2.7	2.7	2.7	2.7	2.7	2.7	2.7	2.7	2.6	2.6	2.5
	25	SHC	3.1	3.1	3.1	3.1	3.1	3.1	3.1	3.1	3.1	3.1	3.1	3.1	3.1	3.0	3.0
	27	SHC	3.5	3.5	3.5	3.5	3.5	3.5	3.5	3.5	3.5	3.5	3.5	3.5	3.5	3.4	3.4
	29	SHC	4.0	4.0	4.0	4.0	4.0	4.0	4.0	4.0	4.0	4.0	4.0	4.0	3.9	3.9	3.8
	31	SHC	4.4	4.4	4.4	4.4	4.4	4.4	4.4	4.4	4.4	4.4	4.4	4.4	4.4	4.3	4.3
22		TC	6.7	6.7	6.7	6.7	6.7	6.7	6.7	6.7	6.7	6.7	6.7	6.6	6.4	6.2	6.1
	25	SHC	2.9	2.9	2.9	2.9	2.9	2.9	2.9	2.9	2.9	2.9	2.9	2.9	2.8	2.7	2.7
	27	SHC	3.4	3.4	3.4	3.4	3.4	3.4	3.4	3.4	3.4	3.4	3.4	3.3	3.2	3.2	3.1
	29	SHC	3.8	3.8	3.8	3.8	3.8	3.8	3.8	3.8	3.8	3.8	3.8	3.7	3.7	3.6	3.6
	31	SHC	4.2	4.2	4.2	4.2	4.2	4.2	4.2	4.2	4.2	4.2	4.2	4.2	4.1	4.0	4.0
23		TC	7.1	7.1	7.1	7.1	7.1	7.1	7.1	7.1	7.1	7.1	6.9	6.7	6.5	6.3	6.2
	25	SHC	2.8	2.8	2.8	2.8	2.8	2.8	2.8	2.8	2.8	2.8	2.7	2.6	2.5	2.5	2.4
	27	SHC	3.2	3.2	3.2	3.2	3.2	3.2	3.2	3.2	3.2	3.2	3.1	3.0	3.0	2.9	2.9
	29	SHC	3.6	3.6	3.6	3.6	3.6	3.6	3.6	3.6	3.6	3.6	3.6	3.5	3.4	3.3	3.3
	31	SHC	4.1	4.1	4.1	4.1	4.1	4.1	4.1	4.1	4.1	4.1	4.0	3.9	3.8	3.8	3.7

3. Cooling Capacity of Indoor Unit

• S-71MP1E5

Power supply : 220/230/240V 1phase-50,60Hz TC : Total Cooling Capacity (kW) SHC : Sensible Heat Capacity (kW)

This data is when the indoor unit connects with 16HP outdoor unit.

RATING CAPACITY:		7.1 kW	AIR FLOW RATE: 17.0 m³/min														
EVAPORATOR			CONDENSER														
AIR INTAKE. TEMP			AMBIENT TEMP. (°C)														
W.B.	D.B.		15	17	19	21	23	25	27	29	31	33	35	37	39	41	43
14		TC	4.7	4.7	4.7	4.7	4.7	4.7	4.7	4.7	4.7	4.7	4.7	4.7	4.7	4.7	4.7
	21	SHC	3.7	3.7	3.7	3.7	3.7	3.7	3.7	3.7	3.7	3.7	3.7	3.7	3.7	3.7	3.7
	23	SHC	4.2	4.2	4.2	4.2	4.2	4.2	4.2	4.2	4.2	4.2	4.2	4.2	4.2	4.2	4.2
	25	SHC	4.6	4.6	4.6	4.6	4.6	4.6	4.6	4.6	4.6	4.6	4.6	4.6	4.6	4.6	4.6
	27	SHC	4.7	4.7	4.7	4.7	4.7	4.7	4.7	4.7	4.7	4.7	4.7	4.7	4.7	4.7	4.7
15		TC	5.2	5.2	5.2	5.2	5.2	5.2	5.2	5.2	5.2	5.2	5.2	5.2	5.2	5.2	5.2
	21	SHC	3.6	3.6	3.6	3.6	3.6	3.6	3.6	3.6	3.6	3.6	3.6	3.6	3.6	3.6	3.6
	23	SHC	4.1	4.1	4.1	4.1	4.1	4.1	4.1	4.1	4.1	4.1	4.1	4.1	4.1	4.1	4.1
	25	SHC	4.6	4.6	4.6	4.6	4.6	4.6	4.6	4.6	4.6	4.6	4.6	4.6	4.6	4.6	4.6
	27	SHC	5.0	5.0	5.0	5.0	5.0	5.0	5.0	5.0	5.0	5.0	5.0	5.0	5.0	5.0	5.0
16		TC	5.7	5.7	5.7	5.7	5.7	5.7	5.7	5.7	5.7	5.7	5.7	5.7	5.7	5.7	5.7
	21	SHC	3.6	3.6	3.6	3.6	3.6	3.6	3.6	3.6	3.6	3.6	3.6	3.6	3.6	3.6	3.6
	23	SHC	4.0	4.0	4.0	4.0	4.0	4.0	4.0	4.0	4.0	4.0	4.0	4.0	4.0	4.0	4.0
	25	SHC	4.5	4.5	4.5	4.5	4.5	4.5	4.5	4.5	4.5	4.5	4.5	4.5	4.5	4.5	4.5
	27	SHC	5.0	5.0	5.0	5.0	5.0	5.0	5.0	5.0	5.0	5.0	5.0	5.0	5.0	5.0	5.0
	29	SHC	5.4	5.4	5.4	5.4	5.4	5.4	5.4	5.4	5.4	5.4	5.4	5.4	5.4	5.4	5.4
17		TC	6.2	6.2	6.2	6.2	6.2	6.2	6.2	6.2	6.2	6.2	6.2	6.2	6.2	6.2	6.2
	21	SHC	3.5	3.5	3.5	3.5	3.5	3.5	3.5	3.5	3.5	3.5	3.5	3.5	3.5	3.5	3.5
	23	SHC	3.9	3.9	3.9	3.9	3.9	3.9	3.9	3.9	3.9	3.9	3.9	3.9	3.9	3.9	3.9
	25	SHC	4.4	4.4	4.4	4.4	4.4	4.4	4.4	4.4	4.4	4.4	4.4	4.4	4.4	4.4	4.4
	27	SHC	4.9	4.9	4.9	4.9	4.9	4.9	4.9	4.9	4.9	4.9	4.9	4.9	4.9	4.9	4.9
	29	SHC	5.3	5.3	5.3	5.3	5.3	5.3	5.3	5.3	5.3	5.3	5.3	5.3	5.3	5.3	5.3
18		TC	6.6	6.6	6.6	6.6	6.6	6.6	6.6	6.6	6.6	6.6	6.6	6.6	6.6	6.6	6.6
	21	SHC	3.4	3.4	3.4	3.4	3.4	3.4	3.4	3.4	3.4	3.4	3.4	3.4	3.4	3.4	3.4
	23	SHC	3.8	3.8	3.8	3.8	3.8	3.8	3.8	3.8	3.8	3.8	3.8	3.8	3.8	3.8	3.8
	25	SHC	4.3	4.3	4.3	4.3	4.3	4.3	4.3	4.3	4.3	4.3	4.3	4.3	4.3	4.3	4.3
	27	SHC	4.7	4.7	4.7	4.7	4.7	4.7	4.7	4.7	4.7	4.7	4.7	4.7	4.7	4.7	4.7
	29	SHC	5.2	5.2	5.2	5.2	5.2	5.2	5.2	5.2	5.2	5.2	5.2	5.2	5.2	5.2	5.2
	31	SHC	5.7	5.7	5.7	5.7	5.7	5.7	5.7	5.7	5.7	5.7	5.7	5.7	5.7	5.7	5.7
19		TC	7.1	7.1	7.1	7.1	7.1	7.1	7.1	7.1	7.1	7.1	7.1	7.1	7.1	7.1	7.1
	21	SHC	3.2	3.2	3.2	3.2	3.2	3.2	3.2	3.2	3.2	3.2	3.2	3.2	3.2	3.2	3.2
	23	SHC	3.7	3.7	3.7	3.7	3.7	3.7	3.7	3.7	3.7	3.7	3.7	3.7	3.7	3.7	3.7
	25	SHC	4.2	4.2	4.2	4.2	4.2	4.2	4.2	4.2	4.2	4.2	4.2	4.2	4.2	4.2	4.2
	27	SHC	4.6	4.6	4.6	4.6	4.6	4.6	4.6	4.6	4.6	4.6	4.6	4.6	4.6	4.6	4.6
	29	SHC	5.1	5.1	5.1	5.1	5.1	5.1	5.1	5.1	5.1	5.1	5.1	5.1	5.1	5.1	5.1
	31	SHC	5.6	5.6	5.6	5.6	5.6	5.6	5.6	5.6	5.6	5.6	5.6	5.6	5.6	5.6	5.6
20		TC	7.6	7.6	7.6	7.6	7.6	7.6	7.6	7.6	7.6	7.6	7.6	7.6	7.6	7.5	7.4
	23	SHC	3.6	3.6	3.6	3.6	3.6	3.6	3.6	3.6	3.6	3.6	3.6	3.6	3.6	3.5	3.5
	25	SHC	4.0	4.0	4.0	4.0	4.0	4.0	4.0	4.0	4.0	4.0	4.0	4.0	4.0	4.0	4.0
	27	SHC	4.5	4.5	4.5	4.5	4.5	4.5	4.5	4.5	4.5	4.5	4.5	4.5	4.5	4.5	4.4
	29	SHC	5.0	5.0	5.0	5.0	5.0	5.0	5.0	5.0	5.0	5.0	5.0	5.0	5.0	4.9	4.9
	31	SHC	5.4	5.4	5.4	5.4	5.4	5.4	5.4	5.4	5.4	5.4	5.4	5.4	5.4	5.4	5.4
21		TC	8.0	8.0	8.0	8.0	8.0	8.0	8.0	8.0	8.0	8.0	8.0	8.0	7.9	7.7	7.6
	23	SHC	3.4	3.4	3.4	3.4	3.4	3.4	3.4	3.4	3.4	3.4	3.4	3.4	3.4	3.3	3.2
	25	SHC	3.9	3.9	3.9	3.9	3.9	3.9	3.9	3.9	3.9	3.9	3.9	3.9	3.8	3.7	3.7
	27	SHC	4.3	4.3	4.3	4.3	4.3	4.3	4.3	4.3	4.3	4.3	4.3	4.3	4.3	4.2	4.1
	29	SHC	4.8	4.8	4.8	4.8	4.8	4.8	4.8	4.8	4.8	4.8	4.8	4.8	4.8	4.7	4.6
	31	SHC	5.3	5.3	5.3	5.3	5.3	5.3	5.3	5.3	5.3	5.3	5.3	5.3	5.2	5.1	5.1
22		TC	8.5	8.5	8.5	8.5	8.5	8.5	8.5	8.5	8.5	8.5	8.5	8.3	8.1	7.9	7.7
	25	SHC	3.7	3.7	3.7	3.7	3.7	3.7	3.7	3.7	3.7	3.7	3.7	3.6	3.5	3.4	3.4
	27	SHC	4.2	4.2	4.2	4.2	4.2	4.2	4.2	4.2	4.2	4.2	4.2	4.1	4.0	3.9	3.8
	29	SHC	4.7	4.7	4.7	4.7	4.7	4.7	4.7	4.7	4.7	4.7	4.7	4.6	4.5	4.4	4.3
	31	SHC	5.1	5.1	5.1	5.1	5.1	5.1	5.1	5.1	5.1	5.1	5.1	5.0	4.9	4.8	4.8
23		TC	9.0	9.0	9.0	9.0	9.0	9.0	9.0	9.0	9.0	9.0	8.7	8.5	8.3	8.0	7.9
	25	SHC	3.6	3.6	3.6	3.6	3.6	3.6	3.6	3.6	3.6	3.6	3.4	3.3	3.2	3.1	3.1
	27	SHC	4.0	4.0	4.0	4.0	4.0	4.0	4.0	4.0	4.0	4.0	3.9	3.8	3.7	3.6	3.6
	29	SHC	4.5	4.5	4.5	4.5	4.5	4.5	4.5	4.5	4.5	4.5	4.4	4.3	4.2	4.1	4.0
	31	SHC	5.0	5.0	5.0	5.0	5.0	5.0	5.0	5.0	5.0	5.0	4.8	4.7	4.6	4.5	4.5

3. Cooling Capacity of Indoor Unit

3-12. Concealed Floor Standing Type (R1 Type)

- S-22MR1E5

Power supply : 220/230/240V 1phase-50,60Hz TC : Total Cooling Capacity (kW) SHC : Sensible Heat Capacity (kW)
This data is when the indoor unit connects with 16HP outdoor unit.

RATING CAPACITY:		2.2 kW AIR FLOW RATE: 7.0 m³/min															
EVAPORATOR		CONDENSER															
AIR INTAKE. TEMP		AMBIENT TEMP. (°C)															
W.B.	D.B.		15	17	19	21	23	25	27	29	31	33	35	37	39	41	43
14		TC	1.5	1.5	1.5	1.5	1.5	1.5	1.5	1.5	1.5	1.5	1.5	1.5	1.5	1.5	1.5
	21	SHC	1.2	1.2	1.2	1.2	1.2	1.2	1.2	1.2	1.2	1.2	1.2	1.2	1.2	1.2	1.2
	23	SHC	1.4	1.4	1.4	1.4	1.4	1.4	1.4	1.4	1.4	1.4	1.4	1.4	1.4	1.4	1.4
	25	SHC	1.5	1.5	1.5	1.5	1.5	1.5	1.5	1.5	1.5	1.5	1.5	1.5	1.5	1.5	1.5
	27	SHC	1.5	1.5	1.5	1.5	1.5	1.5	1.5	1.5	1.5	1.5	1.5	1.5	1.5	1.5	1.5
15		TC	1.6	1.6	1.6	1.6	1.6	1.6	1.6	1.6	1.6	1.6	1.6	1.6	1.6	1.6	1.6
	21	SHC	1.2	1.2	1.2	1.2	1.2	1.2	1.2	1.2	1.2	1.2	1.2	1.2	1.2	1.2	1.2
	23	SHC	1.3	1.3	1.3	1.3	1.3	1.3	1.3	1.3	1.3	1.3	1.3	1.3	1.3	1.3	1.3
	25	SHC	1.5	1.5	1.5	1.5	1.5	1.5	1.5	1.5	1.5	1.5	1.5	1.5	1.5	1.5	1.5
	27	SHC	1.6	1.6	1.6	1.6	1.6	1.6	1.6	1.6	1.6	1.6	1.6	1.6	1.6	1.6	1.6
16		TC	1.8	1.8	1.8	1.8	1.8	1.8	1.8	1.8	1.8	1.8	1.8	1.8	1.8	1.8	1.8
	21	SHC	1.1	1.1	1.1	1.1	1.1	1.1	1.1	1.1	1.1	1.1	1.1	1.1	1.1	1.1	1.1
	23	SHC	1.3	1.3	1.3	1.3	1.3	1.3	1.3	1.3	1.3	1.3	1.3	1.3	1.3	1.3	1.3
	25	SHC	1.5	1.5	1.5	1.5	1.5	1.5	1.5	1.5	1.5	1.5	1.5	1.5	1.5	1.5	1.5
	27	SHC	1.6	1.6	1.6	1.6	1.6	1.6	1.6	1.6	1.6	1.6	1.6	1.6	1.6	1.6	1.6
	29	SHC	1.8	1.8	1.8	1.8	1.8	1.8	1.8	1.8	1.8	1.8	1.8	1.8	1.8	1.8	1.8
17		TC	1.9	1.9	1.9	1.9	1.9	1.9	1.9	1.9	1.9	1.9	1.9	1.9	1.9	1.9	1.9
	21	SHC	1.1	1.1	1.1	1.1	1.1	1.1	1.1	1.1	1.1	1.1	1.1	1.1	1.1	1.1	1.1
	23	SHC	1.3	1.3	1.3	1.3	1.3	1.3	1.3	1.3	1.3	1.3	1.3	1.3	1.3	1.3	1.3
	25	SHC	1.4	1.4	1.4	1.4	1.4	1.4	1.4	1.4	1.4	1.4	1.4	1.4	1.4	1.4	1.4
	27	SHC	1.6	1.6	1.6	1.6	1.6	1.6	1.6	1.6	1.6	1.6	1.6	1.6	1.6	1.6	1.6
	29	SHC	1.8	1.8	1.8	1.8	1.8	1.8	1.8	1.8	1.8	1.8	1.8	1.8	1.8	1.8	1.8
18		TC	2.1	2.1	2.1	2.1	2.1	2.1	2.1	2.1	2.1	2.1	2.1	2.1	2.1	2.1	2.1
	21	SHC	1.0	1.0	1.0	1.0	1.0	1.0	1.0	1.0	1.0	1.0	1.0	1.0	1.0	1.0	1.0
	23	SHC	1.2	1.2	1.2	1.2	1.2	1.2	1.2	1.2	1.2	1.2	1.2	1.2	1.2	1.2	1.2
	25	SHC	1.4	1.4	1.4	1.4	1.4	1.4	1.4	1.4	1.4	1.4	1.4	1.4	1.4	1.4	1.4
	27	SHC	1.5	1.5	1.5	1.5	1.5	1.5	1.5	1.5	1.5	1.5	1.5	1.5	1.5	1.5	1.5
	29	SHC	1.7	1.7	1.7	1.7	1.7	1.7	1.7	1.7	1.7	1.7	1.7	1.7	1.7	1.7	1.7
	31	SHC	1.9	1.9	1.9	1.9	1.9	1.9	1.9	1.9	1.9	1.9	1.9	1.9	1.9	1.9	1.9
19		TC	2.2	2.2	2.2	2.2	2.2	2.2	2.2	2.2	2.2	2.2	2.2	2.2	2.2	2.2	2.2
	21	SHC	1.0	1.0	1.0	1.0	1.0	1.0	1.0	1.0	1.0	1.0	1.0	1.0	1.0	1.0	1.0
	23	SHC	1.2	1.2	1.2	1.2	1.2	1.2	1.2	1.2	1.2	1.2	1.2	1.2	1.2	1.2	1.2
	25	SHC	1.3	1.3	1.3	1.3	1.3	1.3	1.3	1.3	1.3	1.3	1.3	1.3	1.3	1.3	1.3
	27	SHC	1.5	1.5	1.5	1.5	1.5	1.5	1.5	1.5	1.5	1.5	1.5	1.5	1.5	1.5	1.5
	29	SHC	1.7	1.7	1.7	1.7	1.7	1.7	1.7	1.7	1.7	1.7	1.7	1.7	1.7	1.7	1.7
	31	SHC	1.8	1.8	1.8	1.8	1.8	1.8	1.8	1.8	1.8	1.8	1.8	1.8	1.8	1.8	1.8
20		TC	2.3	2.3	2.3	2.3	2.3	2.3	2.3	2.3	2.3	2.3	2.3	2.3	2.3	2.3	2.3
	23	SHC	1.1	1.1	1.1	1.1	1.1	1.1	1.1	1.1	1.1	1.1	1.1	1.1	1.1	1.1	1.1
	25	SHC	1.3	1.3	1.3	1.3	1.3	1.3	1.3	1.3	1.3	1.3	1.3	1.3	1.3	1.3	1.3
	27	SHC	1.4	1.4	1.4	1.4	1.4	1.4	1.4	1.4	1.4	1.4	1.4	1.4	1.4	1.4	1.4
	29	SHC	1.6	1.6	1.6	1.6	1.6	1.6	1.6	1.6	1.6	1.6	1.6	1.6	1.6	1.6	1.6
	31	SHC	1.8	1.8	1.8	1.8	1.8	1.8	1.8	1.8	1.8	1.8	1.8	1.8	1.8	1.8	1.8
21		TC	2.5	2.5	2.5	2.5	2.5	2.5	2.5	2.5	2.5	2.5	2.5	2.5	2.5	2.4	2.3
	23	SHC	1.1	1.1	1.1	1.1	1.1	1.1	1.1	1.1	1.1	1.1	1.1	1.1	1.0	1.0	1.0
	25	SHC	1.2	1.2	1.2	1.2	1.2	1.2	1.2	1.2	1.2	1.2	1.2	1.2	1.2	1.2	1.2
	27	SHC	1.4	1.4	1.4	1.4	1.4	1.4	1.4	1.4	1.4	1.4	1.4	1.4	1.4	1.3	1.3
	29	SHC	1.6	1.6	1.6	1.6	1.6	1.6	1.6	1.6	1.6	1.6	1.6	1.6	1.5	1.5	1.5
	31	SHC	1.7	1.7	1.7	1.7	1.7	1.7	1.7	1.7	1.7	1.7	1.7	1.7	1.7	1.7	1.7
22		TC	2.6	2.6	2.6	2.6	2.6	2.6	2.6	2.6	2.6	2.6	2.6	2.6	2.5	2.4	2.4
	25	SHC	1.2	1.2	1.2	1.2	1.2	1.2	1.2	1.2	1.2	1.2	1.2	1.1	1.1	1.1	1.1
	27	SHC	1.3	1.3	1.3	1.3	1.3	1.3	1.3	1.3	1.3	1.3	1.3	1.3	1.3	1.2	1.2
	29	SHC	1.5	1.5	1.5	1.5	1.5	1.5	1.5	1.5	1.5	1.5	1.5	1.5	1.4	1.4	1.4
	31	SHC	1.7	1.7	1.7	1.7	1.7	1.7	1.7	1.7	1.7	1.7	1.7	1.6	1.6	1.6	1.6
23		TC	2.8	2.8	2.8	2.8	2.8	2.8	2.8	2.8	2.8	2.8	2.7	2.6	2.6	2.5	2.4
	25	SHC	1.1	1.1	1.1	1.1	1.1	1.1	1.1	1.1	1.1	1.1	1.1	1.0	1.0	1.0	1.0
	27	SHC	1.3	1.3	1.3	1.3	1.3	1.3	1.3	1.3	1.3	1.3	1.2	1.2	1.2	1.1	1.1
	29	SHC	1.4	1.4	1.4	1.4	1.4	1.4	1.4	1.4	1.4	1.4	1.4	1.4	1.3	1.3	1.3
	31	SHC	1.6	1.6	1.6	1.6	1.6	1.6	1.6	1.6	1.6	1.6	1.6	1.5	1.5	1.5	1.5

3. Cooling Capacity of Indoor Unit

• S-28MR1E5

Power supply : 220/230/240V 1phase-50,60Hz TC : Total Cooling Capacity (kW) SHC : Sensible Heat Capacity (kW)

This data is when the indoor unit connects with 16HP outdoor unit.

RATING CAPACITY:		2.8 kW	AIR FLOW RATE: 7.0 m³/min														
EVAPORATOR			CONDENSER														
AIR INTAKE. TEMP			AMBIENT TEMP. (°C)														
W.B.	D.B.		15	17	19	21	23	25	27	29	31	33	35	37	39	41	43
14		TC	1.9	1.9	1.9	1.9	1.9	1.9	1.9	1.9	1.9	1.9	1.9	1.9	1.9	1.9	1.9
	21	SHC	1.5	1.5	1.5	1.5	1.5	1.5	1.5	1.5	1.5	1.5	1.5	1.5	1.5	1.5	1.5
	23	SHC	1.7	1.7	1.7	1.7	1.7	1.7	1.7	1.7	1.7	1.7	1.7	1.7	1.7	1.7	1.7
	25	SHC	1.9	1.9	1.9	1.9	1.9	1.9	1.9	1.9	1.9	1.9	1.9	1.9	1.9	1.9	1.9
	27	SHC	1.9	1.9	1.9	1.9	1.9	1.9	1.9	1.9	1.9	1.9	1.9	1.9	1.9	1.9	1.9
15		TC	2.1	2.1	2.1	2.1	2.1	2.1	2.1	2.1	2.1	2.1	2.1	2.1	2.1	2.1	2.1
	21	SHC	1.5	1.5	1.5	1.5	1.5	1.5	1.5	1.5	1.5	1.5	1.5	1.5	1.5	1.5	1.5
	23	SHC	1.7	1.7	1.7	1.7	1.7	1.7	1.7	1.7	1.7	1.7	1.7	1.7	1.7	1.7	1.7
	25	SHC	1.9	1.9	1.9	1.9	1.9	1.9	1.9	1.9	1.9	1.9	1.9	1.9	1.9	1.9	1.9
	27	SHC	2.1	2.1	2.1	2.1	2.1	2.1	2.1	2.1	2.1	2.1	2.1	2.1	2.1	2.1	2.1
16		TC	2.2	2.2	2.2	2.2	2.2	2.2	2.2	2.2	2.2	2.2	2.2	2.2	2.2	2.2	2.2
	21	SHC	1.4	1.4	1.4	1.4	1.4	1.4	1.4	1.4	1.4	1.4	1.4	1.4	1.4	1.4	1.4
	23	SHC	1.6	1.6	1.6	1.6	1.6	1.6	1.6	1.6	1.6	1.6	1.6	1.6	1.6	1.6	1.6
	25	SHC	1.8	1.8	1.8	1.8	1.8	1.8	1.8	1.8	1.8	1.8	1.8	1.8	1.8	1.8	1.8
	27	SHC	2.0	2.0	2.0	2.0	2.0	2.0	2.0	2.0	2.0	2.0	2.0	2.0	2.0	2.0	2.0
	29	SHC	2.2	2.2	2.2	2.2	2.2	2.2	2.2	2.2	2.2	2.2	2.2	2.2	2.2	2.2	2.2
17		TC	2.4	2.4	2.4	2.4	2.4	2.4	2.4	2.4	2.4	2.4	2.4	2.4	2.4	2.4	2.4
	21	SHC	1.4	1.4	1.4	1.4	1.4	1.4	1.4	1.4	1.4	1.4	1.4	1.4	1.4	1.4	1.4
	23	SHC	1.6	1.6	1.6	1.6	1.6	1.6	1.6	1.6	1.6	1.6	1.6	1.6	1.6	1.6	1.6
	25	SHC	1.8	1.8	1.8	1.8	1.8	1.8	1.8	1.8	1.8	1.8	1.8	1.8	1.8	1.8	1.8
	27	SHC	2.0	2.0	2.0	2.0	2.0	2.0	2.0	2.0	2.0	2.0	2.0	2.0	2.0	2.0	2.0
	29	SHC	2.2	2.2	2.2	2.2	2.2	2.2	2.2	2.2	2.2	2.2	2.2	2.2	2.2	2.2	2.2
18		TC	2.6	2.6	2.6	2.6	2.6	2.6	2.6	2.6	2.6	2.6	2.6	2.6	2.6	2.6	2.6
	21	SHC	1.3	1.3	1.3	1.3	1.3	1.3	1.3	1.3	1.3	1.3	1.3	1.3	1.3	1.3	1.3
	23	SHC	1.5	1.5	1.5	1.5	1.5	1.5	1.5	1.5	1.5	1.5	1.5	1.5	1.5	1.5	1.5
	25	SHC	1.7	1.7	1.7	1.7	1.7	1.7	1.7	1.7	1.7	1.7	1.7	1.7	1.7	1.7	1.7
	27	SHC	1.9	1.9	1.9	1.9	1.9	1.9	1.9	1.9	1.9	1.9	1.9	1.9	1.9	1.9	1.9
	29	SHC	2.1	2.1	2.1	2.1	2.1	2.1	2.1	2.1	2.1	2.1	2.1	2.1	2.1	2.1	2.1
	31	SHC	2.3	2.3	2.3	2.3	2.3	2.3	2.3	2.3	2.3	2.3	2.3	2.3	2.3	2.3	2.3
19		TC	2.8	2.8	2.8	2.8	2.8	2.8	2.8	2.8	2.8	2.8	2.8	2.8	2.8	2.8	2.8
	21	SHC	1.3	1.3	1.3	1.3	1.3	1.3	1.3	1.3	1.3	1.3	1.3	1.3	1.3	1.3	1.3
	23	SHC	1.5	1.5	1.5	1.5	1.5	1.5	1.5	1.5	1.5	1.5	1.5	1.5	1.5	1.5	1.5
	25	SHC	1.7	1.7	1.7	1.7	1.7	1.7	1.7	1.7	1.7	1.7	1.7	1.7	1.7	1.7	1.7
	27	SHC	1.9	1.9	1.9	1.9	1.9	1.9	1.9	1.9	1.9	1.9	1.9	1.9	1.9	1.9	1.9
	29	SHC	2.1	2.1	2.1	2.1	2.1	2.1	2.1	2.1	2.1	2.1	2.1	2.1	2.1	2.1	2.1
	31	SHC	2.3	2.3	2.3	2.3	2.3	2.3	2.3	2.3	2.3	2.3	2.3	2.3	2.3	2.3	2.3
20		TC	3.0	3.0	3.0	3.0	3.0	3.0	3.0	3.0	3.0	3.0	3.0	3.0	3.0	3.0	2.9
	23	SHC	1.4	1.4	1.4	1.4	1.4	1.4	1.4	1.4	1.4	1.4	1.4	1.4	1.4	1.4	1.4
	25	SHC	1.6	1.6	1.6	1.6	1.6	1.6	1.6	1.6	1.6	1.6	1.6	1.6	1.6	1.6	1.6
	27	SHC	1.8	1.8	1.8	1.8	1.8	1.8	1.8	1.8	1.8	1.8	1.8	1.8	1.8	1.8	1.8
	29	SHC	2.0	2.0	2.0	2.0	2.0	2.0	2.0	2.0	2.0	2.0	2.0	2.0	2.0	2.0	2.0
	31	SHC	2.2	2.2	2.2	2.2	2.2	2.2	2.2	2.2	2.2	2.2	2.2	2.2	2.2	2.2	2.2
21		TC	3.2	3.2	3.2	3.2	3.2	3.2	3.2	3.2	3.2	3.2	3.2	3.2	3.1	3.0	3.0
	23	SHC	1.3	1.3	1.3	1.3	1.3	1.3	1.3	1.3	1.3	1.3	1.3	1.3	1.3	1.3	1.3
	25	SHC	1.5	1.5	1.5	1.5	1.5	1.5	1.5	1.5	1.5	1.5	1.5	1.5	1.5	1.5	1.5
	27	SHC	1.7	1.7	1.7	1.7	1.7	1.7	1.7	1.7	1.7	1.7	1.7	1.7	1.7	1.7	1.7
	29	SHC	1.9	1.9	1.9	1.9	1.9	1.9	1.9	1.9	1.9	1.9	1.9	1.9	1.9	1.9	1.9
	31	SHC	2.2	2.2	2.2	2.2	2.2	2.2	2.2	2.2	2.2	2.2	2.2	2.2	2.1	2.1	2.1
22		TC	3.4	3.4	3.4	3.4	3.4	3.4	3.4	3.4	3.4	3.4	3.4	3.3	3.2	3.1	3.1
	25	SHC	1.5	1.5	1.5	1.5	1.5	1.5	1.5	1.5	1.5	1.5	1.5	1.4	1.4	1.4	1.3
	27	SHC	1.7	1.7	1.7	1.7	1.7	1.7	1.7	1.7	1.7	1.7	1.7	1.6	1.6	1.6	1.5
	29	SHC	1.9	1.9	1.9	1.9	1.9	1.9	1.9	1.9	1.9	1.9	1.9	1.8	1.8	1.8	1.7
	31	SHC	2.1	2.1	2.1	2.1	2.1	2.1	2.1	2.1	2.1	2.1	2.1	2.0	2.0	2.0	2.0
23		TC	3.5	3.5	3.5	3.5	3.5	3.5	3.5	3.5	3.5	3.5	3.4	3.3	3.3	3.2	3.1
	25	SHC	1.4	1.4	1.4	1.4	1.4	1.4	1.4	1.4	1.4	1.4	1.3	1.3	1.3	1.2	1.2
	27	SHC	1.6	1.6	1.6	1.6	1.6	1.6	1.6	1.6	1.6	1.6	1.6	1.5	1.5	1.4	1.4
	29	SHC	1.8	1.8	1.8	1.8	1.8	1.8	1.8	1.8	1.8	1.8	1.8	1.7	1.7	1.6	1.6
	31	SHC	2.0	2.0	2.0	2.0	2.0	2.0	2.0	2.0	2.0	2.0	2.0	1.9	1.9	1.8	1.8

3. Cooling Capacity of Indoor Unit

- S-36MR1E5

Power supply : 220/230/240V 1phase-50,60Hz TC : Total Cooling Capacity (kW) SHC : Sensible Heat Capacity (kW)
This data is when the indoor unit connects with 16HP outdoor unit.

RATING CAPACITY:		3.6 kW	AIR FLOW RATE: 9.0 m³/min														
EVAPORATOR			CONDENSER														
AIR INTAKE. TEMP			AMBIENT TEMP. (°C)														
W.B.	D.B.		15	17	19	21	23	25	27	29	31	33	35	37	39	41	43
14		TC	2.4	2.4	2.4	2.4	2.4	2.4	2.4	2.4	2.4	2.4	2.4	2.4	2.4	2.4	2.4
	21	SHC	1.9	1.9	1.9	1.9	1.9	1.9	1.9	1.9	1.9	1.9	1.9	1.9	1.9	1.9	1.9
	23	SHC	2.2	2.2	2.2	2.2	2.2	2.2	2.2	2.2	2.2	2.2	2.2	2.2	2.2	2.2	2.2
	25	SHC	2.4	2.4	2.4	2.4	2.4	2.4	2.4	2.4	2.4	2.4	2.4	2.4	2.4	2.4	2.4
	27	SHC	2.4	2.4	2.4	2.4	2.4	2.4	2.4	2.4	2.4	2.4	2.4	2.4	2.4	2.4	2.4
15		TC	2.6	2.6	2.6	2.6	2.6	2.6	2.6	2.6	2.6	2.6	2.6	2.6	2.6	2.6	2.6
	21	SHC	1.9	1.9	1.9	1.9	1.9	1.9	1.9	1.9	1.9	1.9	1.9	1.9	1.9	1.9	1.9
	23	SHC	2.1	2.1	2.1	2.1	2.1	2.1	2.1	2.1	2.1	2.1	2.1	2.1	2.1	2.1	2.1
	25	SHC	2.4	2.4	2.4	2.4	2.4	2.4	2.4	2.4	2.4	2.4	2.4	2.4	2.4	2.4	2.4
	27	SHC	2.6	2.6	2.6	2.6	2.6	2.6	2.6	2.6	2.6	2.6	2.6	2.6	2.6	2.6	2.6
16		TC	2.9	2.9	2.9	2.9	2.9	2.9	2.9	2.9	2.9	2.9	2.9	2.9	2.9	2.9	2.9
	21	SHC	1.8	1.8	1.8	1.8	1.8	1.8	1.8	1.8	1.8	1.8	1.8	1.8	1.8	1.8	1.8
	23	SHC	2.1	2.1	2.1	2.1	2.1	2.1	2.1	2.1	2.1	2.1	2.1	2.1	2.1	2.1	2.1
	25	SHC	2.3	2.3	2.3	2.3	2.3	2.3	2.3	2.3	2.3	2.3	2.3	2.3	2.3	2.3	2.3
	27	SHC	2.6	2.6	2.6	2.6	2.6	2.6	2.6	2.6	2.6	2.6	2.6	2.6	2.6	2.6	2.6
	29	SHC	2.9	2.9	2.9	2.9	2.9	2.9	2.9	2.9	2.9	2.9	2.9	2.9	2.9	2.9	2.9
17		TC	3.1	3.1	3.1	3.1	3.1	3.1	3.1	3.1	3.1	3.1	3.1	3.1	3.1	3.1	3.1
	21	SHC	1.8	1.8	1.8	1.8	1.8	1.8	1.8	1.8	1.8	1.8	1.8	1.8	1.8	1.8	1.8
	23	SHC	2.0	2.0	2.0	2.0	2.0	2.0	2.0	2.0	2.0	2.0	2.0	2.0	2.0	2.0	2.0
	25	SHC	2.3	2.3	2.3	2.3	2.3	2.3	2.3	2.3	2.3	2.3	2.3	2.3	2.3	2.3	2.3
	27	SHC	2.5	2.5	2.5	2.5	2.5	2.5	2.5	2.5	2.5	2.5	2.5	2.5	2.5	2.5	2.5
	29	SHC	2.8	2.8	2.8	2.8	2.8	2.8	2.8	2.8	2.8	2.8	2.8	2.8	2.8	2.8	2.8
18		TC	3.4	3.4	3.4	3.4	3.4	3.4	3.4	3.4	3.4	3.4	3.4	3.4	3.4	3.4	3.4
	21	SHC	1.7	1.7	1.7	1.7	1.7	1.7	1.7	1.7	1.7	1.7	1.7	1.7	1.7	1.7	1.7
	23	SHC	2.0	2.0	2.0	2.0	2.0	2.0	2.0	2.0	2.0	2.0	2.0	2.0	2.0	2.0	2.0
	25	SHC	2.2	2.2	2.2	2.2	2.2	2.2	2.2	2.2	2.2	2.2	2.2	2.2	2.2	2.2	2.2
	27	SHC	2.5	2.5	2.5	2.5	2.5	2.5	2.5	2.5	2.5	2.5	2.5	2.5	2.5	2.5	2.5
	29	SHC	2.7	2.7	2.7	2.7	2.7	2.7	2.7	2.7	2.7	2.7	2.7	2.7	2.7	2.7	2.7
	31	SHC	3.0	3.0	3.0	3.0	3.0	3.0	3.0	3.0	3.0	3.0	3.0	3.0	3.0	3.0	3.0
19		TC	3.6	3.6	3.6	3.6	3.6	3.6	3.6	3.6	3.6	3.6	3.6	3.6	3.6	3.6	3.6
	21	SHC	1.6	1.6	1.6	1.6	1.6	1.6	1.6	1.6	1.6	1.6	1.6	1.6	1.6	1.6	1.6
	23	SHC	1.9	1.9	1.9	1.9	1.9	1.9	1.9	1.9	1.9	1.9	1.9	1.9	1.9	1.9	1.9
	25	SHC	2.1	2.1	2.1	2.1	2.1	2.1	2.1	2.1	2.1	2.1	2.1	2.1	2.1	2.1	2.1
	27	SHC	2.4	2.4	2.4	2.4	2.4	2.4	2.4	2.4	2.4	2.4	2.4	2.4	2.4	2.4	2.4
	29	SHC	2.7	2.7	2.7	2.7	2.7	2.7	2.7	2.7	2.7	2.7	2.7	2.7	2.7	2.7	2.7
	31	SHC	2.9	2.9	2.9	2.9	2.9	2.9	2.9	2.9	2.9	2.9	2.9	2.9	2.9	2.9	2.9
20		TC	3.8	3.8	3.8	3.8	3.8	3.8	3.8	3.8	3.8	3.8	3.8	3.8	3.8	3.8	3.8
	23	SHC	1.8	1.8	1.8	1.8	1.8	1.8	1.8	1.8	1.8	1.8	1.8	1.8	1.8	1.8	1.8
	25	SHC	2.1	2.1	2.1	2.1	2.1	2.1	2.1	2.1	2.1	2.1	2.1	2.1	2.1	2.1	2.0
	27	SHC	2.3	2.3	2.3	2.3	2.3	2.3	2.3	2.3	2.3	2.3	2.3	2.3	2.3	2.3	2.3
	29	SHC	2.6	2.6	2.6	2.6	2.6	2.6	2.6	2.6	2.6	2.6	2.6	2.6	2.6	2.6	2.5
	31	SHC	2.8	2.8	2.8	2.8	2.8	2.8	2.8	2.8	2.8	2.8	2.8	2.8	2.8	2.8	2.8
21		TC	4.1	4.1	4.1	4.1	4.1	4.1	4.1	4.1	4.1	4.1	4.1	4.1	4.0	3.9	3.8
	23	SHC	1.7	1.7	1.7	1.7	1.7	1.7	1.7	1.7	1.7	1.7	1.7	1.7	1.7	1.6	1.6
	25	SHC	2.0	2.0	2.0	2.0	2.0	2.0	2.0	2.0	2.0	2.0	2.0	2.0	2.0	1.9	1.9
	27	SHC	2.2	2.2	2.2	2.2	2.2	2.2	2.2	2.2	2.2	2.2	2.2	2.2	2.2	2.2	2.1
	29	SHC	2.5	2.5	2.5	2.5	2.5	2.5	2.5	2.5	2.5	2.5	2.5	2.5	2.5	2.4	2.4
	31	SHC	2.7	2.7	2.7	2.7	2.7	2.7	2.7	2.7	2.7	2.7	2.7	2.7	2.7	2.7	2.6
22		TC	4.3	4.3	4.3	4.3	4.3	4.3	4.3	4.3	4.3	4.3	4.3	4.2	4.1	4.0	3.9
	25	SHC	1.9	1.9	1.9	1.9	1.9	1.9	1.9	1.9	1.9	1.9	1.9	1.8	1.8	1.7	1.7
	27	SHC	2.1	2.1	2.1	2.1	2.1	2.1	2.1	2.1	2.1	2.1	2.1	2.1	2.1	2.0	2.0
	29	SHC	2.4	2.4	2.4	2.4	2.4	2.4	2.4	2.4	2.4	2.4	2.4	2.4	2.3	2.3	2.2
	31	SHC	2.7	2.7	2.7	2.7	2.7	2.7	2.7	2.7	2.7	2.7	2.7	2.6	2.6	2.5	2.5
23		TC	4.6	4.6	4.6	4.6	4.6	4.6	4.6	4.6	4.6	4.6	4.4	4.3	4.2	4.1	4.0
	25	SHC	1.8	1.8	1.8	1.8	1.8	1.8	1.8	1.8	1.8	1.8	1.7	1.7	1.6	1.6	1.6
	27	SHC	2.0	2.0	2.0	2.0	2.0	2.0	2.0	2.0	2.0	2.0	2.0	1.9	1.9	1.8	1.8
	29	SHC	2.3	2.3	2.3	2.3	2.3	2.3	2.3	2.3	2.3	2.3	2.3	2.2	2.1	2.1	2.1
	31	SHC	2.6	2.6	2.6	2.6	2.6	2.6	2.6	2.6	2.6	2.6	2.5	2.5	2.4	2.4	2.3

3. Cooling Capacity of Indoor Unit

- S-45MR1E5

Power supply : 220/230/240V 1phase-50,60Hz TC : Total Cooling Capacity (kW) SHC : Sensible Heat Capacity (kW)
This data is when the indoor unit connects with 16HP outdoor unit.

RATING CAPACITY:		4.5 kW AIR FLOW RATE:12.0 m³/min																
EVAPORATOR		CONDENSER																
AIR INTAKE. TEMP		AMBIENT TEMP. (°C)																
W.B.	D.B.		15	17	19	21	23	25	27	29	31	33	35	37	39	41	43
14		TC	3.0	3.0	3.0	3.0	3.0	3.0	3.0	3.0	3.0	3.0	3.0	3.0	3.0	3.0	3.0
	21	SHC	2.2	2.2	2.2	2.2	2.2	2.2	2.2	2.2	2.2	2.2	2.2	2.2	2.2	2.2	2.2
	23	SHC	2.4	2.4	2.4	2.4	2.4	2.4	2.4	2.4	2.4	2.4	2.4	2.4	2.4	2.4	2.4
	25	SHC	2.6	2.6	2.6	2.6	2.6	2.6	2.6	2.6	2.6	2.6	2.6	2.6	2.6	2.6	2.6
	27	SHC	2.8	2.8	2.8	2.8	2.8	2.8	2.8	2.8	2.8	2.8	2.8	2.8	2.8	2.8	2.8
15		TC	3.3	3.3	3.3	3.3	3.3	3.3	3.3	3.3	3.3	3.3	3.3	3.3	3.3	3.3	3.3
	21	SHC	2.2	2.2	2.2	2.2	2.2	2.2	2.2	2.2	2.2	2.2	2.2	2.2	2.2	2.2	2.2
	23	SHC	2.4	2.4	2.4	2.4	2.4	2.4	2.4	2.4	2.4	2.4	2.4	2.4	2.4	2.4	2.4
	25	SHC	2.6	2.6	2.6	2.6	2.6	2.6	2.6	2.6	2.6	2.6	2.6	2.6	2.6	2.6	2.6
	27	SHC	2.8	2.8	2.8	2.8	2.8	2.8	2.8	2.8	2.8	2.8	2.8	2.8	2.8	2.8	2.8
16		TC	3.6	3.6	3.6	3.6	3.6	3.6	3.6	3.6	3.6	3.6	3.6	3.6	3.6	3.6	3.6
	21	SHC	2.2	2.2	2.2	2.2	2.2	2.2	2.2	2.2	2.2	2.2	2.2	2.2	2.2	2.2	2.2
	23	SHC	2.4	2.4	2.4	2.4	2.4	2.4	2.4	2.4	2.4	2.4	2.4	2.4	2.4	2.4	2.4
	25	SHC	2.6	2.6	2.6	2.6	2.6	2.6	2.6	2.6	2.6	2.6	2.6	2.6	2.6	2.6	2.6
	27	SHC	2.8	2.8	2.8	2.8	2.8	2.8	2.8	2.8	2.8	2.8	2.8	2.8	2.8	2.8	2.8
	29	SHC	3.0	3.0	3.0	3.0	3.0	3.0	3.0	3.0	3.0	3.0	3.0	3.0	3.0	3.0	3.0
17		TC	3.9	3.9	3.9	3.9	3.9	3.9	3.9	3.9	3.9	3.9	3.9	3.9	3.9	3.9	3.9
	21	SHC	2.2	2.2	2.2	2.2	2.2	2.2	2.2	2.2	2.2	2.2	2.2	2.2	2.2	2.2	2.2
	23	SHC	2.4	2.4	2.4	2.4	2.4	2.4	2.4	2.4	2.4	2.4	2.4	2.4	2.4	2.4	2.4
	25	SHC	2.6	2.6	2.6	2.6	2.6	2.6	2.6	2.6	2.6	2.6	2.6	2.6	2.6	2.6	2.6
	27	SHC	2.8	2.8	2.8	2.8	2.8	2.8	2.8	2.8	2.8	2.8	2.8	2.8	2.8	2.8	2.8
	29	SHC	3.0	3.0	3.0	3.0	3.0	3.0	3.0	3.0	3.0	3.0	3.0	3.0	3.0	3.0	3.0
18		TC	4.2	4.2	4.2	4.2	4.2	4.2	4.2	4.2	4.2	4.2	4.2	4.2	4.2	4.2	4.2
	21	SHC	2.2	2.2	2.2	2.2	2.2	2.2	2.2	2.2	2.2	2.2	2.2	2.2	2.2	2.2	2.2
	23	SHC	2.4	2.4	2.4	2.4	2.4	2.4	2.4	2.4	2.4	2.4	2.4	2.4	2.4	2.4	2.4
	25	SHC	2.6	2.6	2.6	2.6	2.6	2.6	2.6	2.6	2.6	2.6	2.6	2.6	2.6	2.6	2.6
	27	SHC	2.8	2.8	2.8	2.8	2.8	2.8	2.8	2.8	2.8	2.8	2.8	2.8	2.8	2.8	2.8
	29	SHC	3.0	3.0	3.0	3.0	3.0	3.0	3.0	3.0	3.0	3.0	3.0	3.0	3.0	3.0	3.0
	31	SHC	3.2	3.2	3.2	3.2	3.2	3.2	3.2	3.2	3.2	3.2	3.2	3.2	3.2	3.2	3.2
19		TC	4.5	4.5	4.5	4.5	4.5	4.5	4.5	4.5	4.5	4.5	4.5	4.5	4.5	4.5	4.5
	21	SHC	2.1	2.1	2.1	2.1	2.1	2.1	2.1	2.1	2.1	2.1	2.1	2.1	2.1	2.1	2.1
	23	SHC	2.4	2.4	2.4	2.4	2.4	2.4	2.4	2.4	2.4	2.4	2.4	2.4	2.4	2.4	2.4
	25	SHC	2.6	2.6	2.6	2.6	2.6	2.6	2.6	2.6	2.6	2.6	2.6	2.6	2.6	2.6	2.6
	27	SHC	2.8	2.8	2.8	2.8	2.8	2.8	2.8	2.8	2.8	2.8	2.8	2.8	2.8	2.8	2.8
	29	SHC	3.0	3.0	3.0	3.0	3.0	3.0	3.0	3.0	3.0	3.0	3.0	3.0	3.0	3.0	3.0
	31	SHC	3.2	3.2	3.2	3.2	3.2	3.2	3.2	3.2	3.2	3.2	3.2	3.2	3.2	3.2	3.2
20		TC	4.8	4.8	4.8	4.8	4.8	4.8	4.8	4.8	4.8	4.8	4.8	4.8	4.8	4.8	4.7
	23	SHC	2.3	2.3	2.3	2.3	2.3	2.3	2.3	2.3	2.3	2.3	2.3	2.3	2.3	2.3	2.3
	25	SHC	2.5	2.5	2.5	2.5	2.5	2.5	2.5	2.5	2.5	2.5	2.5	2.5	2.5	2.5	2.5
	27	SHC	2.8	2.8	2.8	2.8	2.8	2.8	2.8	2.8	2.8	2.8	2.8	2.8	2.8	2.7	2.7
	29	SHC	3.0	3.0	3.0	3.0	3.0	3.0	3.0	3.0	3.0	3.0	3.0	3.0	3.0	3.0	2.9
	31	SHC	3.2	3.2	3.2	3.2	3.2	3.2	3.2	3.2	3.2	3.2	3.2	3.2	3.2	3.2	3.1
21		TC	5.1	5.1	5.1	5.1	5.1	5.1	5.1	5.1	5.1	5.1	5.1	5.1	5.0	4.9	4.8
	23	SHC	2.3	2.3	2.3	2.3	2.3	2.3	2.3	2.3	2.3	2.3	2.3	2.3	2.2	2.2	2.1
	25	SHC	2.5	2.5	2.5	2.5	2.5	2.5	2.5	2.5	2.5	2.5	2.5	2.5	2.5	2.4	2.3
	27	SHC	2.7	2.7	2.7	2.7	2.7	2.7	2.7	2.7	2.7	2.7	2.7	2.7	2.7	2.6	2.6
	29	SHC	2.9	2.9	2.9	2.9	2.9	2.9	2.9	2.9	2.9	2.9	2.9	2.9	2.9	2.8	2.8
	31	SHC	3.1	3.1	3.1	3.1	3.1	3.1	3.1	3.1	3.1	3.1	3.1	3.1	3.1	3.0	3.0
22		TC	5.4	5.4	5.4	5.4	5.4	5.4	5.4	5.4	5.4	5.4	5.4	5.3	5.1	5.0	4.9
	25	SHC	2.5	2.5	2.5	2.5	2.5	2.5	2.5	2.5	2.5	2.5	2.5	2.4	2.3	2.2	2.2
	27	SHC	2.7	2.7	2.7	2.7	2.7	2.7	2.7	2.7	2.7	2.7	2.7	2.6	2.5	2.4	2.4
	29	SHC	2.9	2.9	2.9	2.9	2.9	2.9	2.9	2.9	2.9	2.9	2.9	2.8	2.7	2.7	2.6
	31	SHC	3.1	3.1	3.1	3.1	3.1	3.1	3.1	3.1	3.1	3.1	3.1	3.0	3.0	2.9	2.8
23		TC	5.7	5.7	5.7	5.7	5.7	5.7	5.7	5.7	5.7	5.7	5.5	5.4	5.2	5.1	5.0
	25	SHC	2.4	2.4	2.4	2.4	2.4	2.4	2.4	2.4	2.4	2.4	2.3	2.2	2.2	2.1	2.0
	27	SHC	2.6	2.6	2.6	2.6	2.6	2.6	2.6	2.6	2.6	2.6	2.5	2.5	2.4	2.3	2.3
	29	SHC	2.8	2.8	2.8	2.8	2.8	2.8	2.8	2.8	2.8	2.8	2.7	2.7	2.6	2.5	2.5
	31	SHC	3.1	3.1	3.1	3.1	3.1	3.1	3.1	3.1	3.1	3.1	3.0	2.9	2.8	2.7	2.7

3. Cooling Capacity of Indoor Unit

● S-56MR1E5

Power supply : 220/230/240V 1phase-50,60Hz TC : Total Cooling Capacity (kW) SHC : Sensible Heat Capacity (kW)

This data is when the indoor unit connects with 16HP outdoor unit.

RATING CAPACITY:		5.6 kW	AIR FLOW RATE: 15.0 m³/min														
EVAPORATOR			CONDENSER														
AIR INTAKE. TEMP			AMBIENT TEMP. (°C)														
W.B.	D.B.		15	17	19	21	23	25	27	29	31	33	35	37	39	41	43
14		TC	3.7	3.7	3.7	3.7	3.7	3.7	3.7	3.7	3.7	3.7	3.7	3.7	3.7	3.7	3.7
	21	SHC	3.1	3.1	3.1	3.1	3.1	3.1	3.1	3.1	3.1	3.1	3.1	3.1	3.1	3.1	3.1
	23	SHC	3.6	3.6	3.6	3.6	3.6	3.6	3.6	3.6	3.6	3.6	3.6	3.6	3.6	3.6	3.6
	25	SHC	3.7	3.7	3.7	3.7	3.7	3.7	3.7	3.7	3.7	3.7	3.7	3.7	3.7	3.7	3.7
	27	SHC	3.7	3.7	3.7	3.7	3.7	3.7	3.7	3.7	3.7	3.7	3.7	3.7	3.7	3.7	3.7
15		TC	4.1	4.1	4.1	4.1	4.1	4.1	4.1	4.1	4.1	4.1	4.1	4.1	4.1	4.1	4.1
	21	SHC	3.0	3.0	3.0	3.0	3.0	3.0	3.0	3.0	3.0	3.0	3.0	3.0	3.0	3.0	3.0
	23	SHC	3.5	3.5	3.5	3.5	3.5	3.5	3.5	3.5	3.5	3.5	3.5	3.5	3.5	3.5	3.5
	25	SHC	3.9	3.9	3.9	3.9	3.9	3.9	3.9	3.9	3.9	3.9	3.9	3.9	3.9	3.9	3.9
	27	SHC	4.1	4.1	4.1	4.1	4.1	4.1	4.1	4.1	4.1	4.1	4.1	4.1	4.1	4.1	4.1
16		TC	4.5	4.5	4.5	4.5	4.5	4.5	4.5	4.5	4.5	4.5	4.5	4.5	4.5	4.5	4.5
	21	SHC	2.9	2.9	2.9	2.9	2.9	2.9	2.9	2.9	2.9	2.9	2.9	2.9	2.9	2.9	2.9
	23	SHC	3.3	3.3	3.3	3.3	3.3	3.3	3.3	3.3	3.3	3.3	3.3	3.3	3.3	3.3	3.3
	25	SHC	3.8	3.8	3.8	3.8	3.8	3.8	3.8	3.8	3.8	3.8	3.8	3.8	3.8	3.8	3.8
	27	SHC	4.2	4.2	4.2	4.2	4.2	4.2	4.2	4.2	4.2	4.2	4.2	4.2	4.2	4.2	4.2
	29	SHC	4.5	4.5	4.5	4.5	4.5	4.5	4.5	4.5	4.5	4.5	4.5	4.5	4.5	4.5	4.5
17		TC	4.9	4.9	4.9	4.9	4.9	4.9	4.9	4.9	4.9	4.9	4.9	4.9	4.9	4.9	4.9
	21	SHC	2.8	2.8	2.8	2.8	2.8	2.8	2.8	2.8	2.8	2.8	2.8	2.8	2.8	2.8	2.8
	23	SHC	3.2	3.2	3.2	3.2	3.2	3.2	3.2	3.2	3.2	3.2	3.2	3.2	3.2	3.2	3.2
	25	SHC	3.7	3.7	3.7	3.7	3.7	3.7	3.7	3.7	3.7	3.7	3.7	3.7	3.7	3.7	3.7
	27	SHC	4.1	4.1	4.1	4.1	4.1	4.1	4.1	4.1	4.1	4.1	4.1	4.1	4.1	4.1	4.1
	29	SHC	4.5	4.5	4.5	4.5	4.5	4.5	4.5	4.5	4.5	4.5	4.5	4.5	4.5	4.5	4.5
18		TC	5.2	5.2	5.2	5.2	5.2	5.2	5.2	5.2	5.2	5.2	5.2	5.2	5.2	5.2	5.2
	21	SHC	2.7	2.7	2.7	2.7	2.7	2.7	2.7	2.7	2.7	2.7	2.7	2.7	2.7	2.7	2.7
	23	SHC	3.1	3.1	3.1	3.1	3.1	3.1	3.1	3.1	3.1	3.1	3.1	3.1	3.1	3.1	3.1
	25	SHC	3.5	3.5	3.5	3.5	3.5	3.5	3.5	3.5	3.5	3.5	3.5	3.5	3.5	3.5	3.5
	27	SHC	4.0	4.0	4.0	4.0	4.0	4.0	4.0	4.0	4.0	4.0	4.0	4.0	4.0	4.0	4.0
	29	SHC	4.4	4.4	4.4	4.4	4.4	4.4	4.4	4.4	4.4	4.4	4.4	4.4	4.4	4.4	4.4
	31	SHC	4.8	4.8	4.8	4.8	4.8	4.8	4.8	4.8	4.8	4.8	4.8	4.8	4.8	4.8	4.8
19		TC	5.6	5.6	5.6	5.6	5.6	5.6	5.6	5.6	5.6	5.6	5.6	5.6	5.6	5.6	5.6
	21	SHC	2.5	2.5	2.5	2.5	2.5	2.5	2.5	2.5	2.5	2.5	2.5	2.5	2.5	2.5	2.5
	23	SHC	3.0	3.0	3.0	3.0	3.0	3.0	3.0	3.0	3.0	3.0	3.0	3.0	3.0	3.0	3.0
	25	SHC	3.4	3.4	3.4	3.4	3.4	3.4	3.4	3.4	3.4	3.4	3.4	3.4	3.4	3.4	3.4
	27	SHC	3.8	3.8	3.8	3.8	3.8	3.8	3.8	3.8	3.8	3.8	3.8	3.8	3.8	3.8	3.8
	29	SHC	4.3	4.3	4.3	4.3	4.3	4.3	4.3	4.3	4.3	4.3	4.3	4.3	4.3	4.3	4.3
	31	SHC	4.7	4.7	4.7	4.7	4.7	4.7	4.7	4.7	4.7	4.7	4.7	4.7	4.7	4.7	4.7
20		TC	6.0	6.0	6.0	6.0	6.0	6.0	6.0	6.0	6.0	6.0	6.0	6.0	6.0	5.9	5.9
	23	SHC	2.8	2.8	2.8	2.8	2.8	2.8	2.8	2.8	2.8	2.8	2.8	2.8	2.8	2.8	2.8
	25	SHC	3.3	3.3	3.3	3.3	3.3	3.3	3.3	3.3	3.3	3.3	3.3	3.3	3.3	3.3	3.2
	27	SHC	3.7	3.7	3.7	3.7	3.7	3.7	3.7	3.7	3.7	3.7	3.7	3.7	3.7	3.7	3.6
	29	SHC	4.1	4.1	4.1	4.1	4.1	4.1	4.1	4.1	4.1	4.1	4.1	4.1	4.1	4.1	4.1
	31	SHC	4.6	4.6	4.6	4.6	4.6	4.6	4.6	4.6	4.6	4.6	4.6	4.6	4.6	4.5	4.5
21		TC	6.3	6.3	6.3	6.3	6.3	6.3	6.3	6.3	6.3	6.3	6.3	6.3	6.3	6.1	6.0
	23	SHC	2.7	2.7	2.7	2.7	2.7	2.7	2.7	2.7	2.7	2.7	2.7	2.7	2.6	2.6	2.5
	25	SHC	3.1	3.1	3.1	3.1	3.1	3.1	3.1	3.1	3.1	3.1	3.1	3.1	3.1	3.0	3.0
	27	SHC	3.5	3.5	3.5	3.5	3.5	3.5	3.5	3.5	3.5	3.5	3.5	3.5	3.5	3.4	3.4
	29	SHC	4.0	4.0	4.0	4.0	4.0	4.0	4.0	4.0	4.0	4.0	4.0	4.0	3.9	3.9	3.8
	31	SHC	4.4	4.4	4.4	4.4	4.4	4.4	4.4	4.4	4.4	4.4	4.4	4.4	4.4	4.3	4.3
22		TC	6.7	6.7	6.7	6.7	6.7	6.7	6.7	6.7	6.7	6.7	6.7	6.6	6.4	6.2	6.1
	25	SHC	2.9	2.9	2.9	2.9	2.9	2.9	2.9	2.9	2.9	2.9	2.9	2.9	2.8	2.7	2.7
	27	SHC	3.4	3.4	3.4	3.4	3.4	3.4	3.4	3.4	3.4	3.4	3.4	3.3	3.2	3.2	3.1
	29	SHC	3.8	3.8	3.8	3.8	3.8	3.8	3.8	3.8	3.8	3.8	3.8	3.7	3.7	3.6	3.6
	31	SHC	4.2	4.2	4.2	4.2	4.2	4.2	4.2	4.2	4.2	4.2	4.2	4.2	4.1	4.0	4.0
23		TC	7.1	7.1	7.1	7.1	7.1	7.1	7.1	7.1	7.1	7.1	6.9	6.7	6.5	6.3	6.2
	25	SHC	2.8	2.8	2.8	2.8	2.8	2.8	2.8	2.8	2.8	2.8	2.7	2.6	2.5	2.5	2.4
	27	SHC	3.2	3.2	3.2	3.2	3.2	3.2	3.2	3.2	3.2	3.2	3.1	3.0	3.0	2.9	2.9
	29	SHC	3.6	3.6	3.6	3.6	3.6	3.6	3.6	3.6	3.6	3.6	3.6	3.5	3.4	3.3	3.3
	31	SHC	4.1	4.1	4.1	4.1	4.1	4.1	4.1	4.1	4.1	4.1	4.0	3.9	3.8	3.8	3.7

3. Cooling Capacity of Indoor Unit

- S-71MR1E5

Power supply : 220/230/240V 1phase-50,60Hz TC : Total Cooling Capacity (kW) SHC : Sensible Heat Capacity (kW)
This data is when the indoor unit connects with 16HP outdoor unit.

RATING CAPACITY:		7.1 kW AIR FLOW RATE: 17.0 m³/min															
EVAPORATOR		CONDENSER															
AIR INTAKE. TEMP		AMBIENT TEMP. (°C)															
W.B.	D.B.		15	17	19	21	23	25	27	29	31	33	35	37	39	41	43
14		TC	4.7	4.7	4.7	4.7	4.7	4.7	4.7	4.7	4.7	4.7	4.7	4.7	4.7	4.7	4.7
	21	SHC	3.7	3.7	3.7	3.7	3.7	3.7	3.7	3.7	3.7	3.7	3.7	3.7	3.7	3.7	3.7
	23	SHC	4.2	4.2	4.2	4.2	4.2	4.2	4.2	4.2	4.2	4.2	4.2	4.2	4.2	4.2	4.2
	25	SHC	4.6	4.6	4.6	4.6	4.6	4.6	4.6	4.6	4.6	4.6	4.6	4.6	4.6	4.6	4.6
	27	SHC	4.7	4.7	4.7	4.7	4.7	4.7	4.7	4.7	4.7	4.7	4.7	4.7	4.7	4.7	4.7
15		TC	5.2	5.2	5.2	5.2	5.2	5.2	5.2	5.2	5.2	5.2	5.2	5.2	5.2	5.2	5.2
	21	SHC	3.6	3.6	3.6	3.6	3.6	3.6	3.6	3.6	3.6	3.6	3.6	3.6	3.6	3.6	3.6
	23	SHC	4.1	4.1	4.1	4.1	4.1	4.1	4.1	4.1	4.1	4.1	4.1	4.1	4.1	4.1	4.1
	25	SHC	4.6	4.6	4.6	4.6	4.6	4.6	4.6	4.6	4.6	4.6	4.6	4.6	4.6	4.6	4.6
	27	SHC	5.0	5.0	5.0	5.0	5.0	5.0	5.0	5.0	5.0	5.0	5.0	5.0	5.0	5.0	5.0
16		TC	5.7	5.7	5.7	5.7	5.7	5.7	5.7	5.7	5.7	5.7	5.7	5.7	5.7	5.7	5.7
	21	SHC	3.6	3.6	3.6	3.6	3.6	3.6	3.6	3.6	3.6	3.6	3.6	3.6	3.6	3.6	3.6
	23	SHC	4.0	4.0	4.0	4.0	4.0	4.0	4.0	4.0	4.0	4.0	4.0	4.0	4.0	4.0	4.0
	25	SHC	4.5	4.5	4.5	4.5	4.5	4.5	4.5	4.5	4.5	4.5	4.5	4.5	4.5	4.5	4.5
	27	SHC	5.0	5.0	5.0	5.0	5.0	5.0	5.0	5.0	5.0	5.0	5.0	5.0	5.0	5.0	5.0
	29	SHC	5.4	5.4	5.4	5.4	5.4	5.4	5.4	5.4	5.4	5.4	5.4	5.4	5.4	5.4	5.4
17		TC	6.2	6.2	6.2	6.2	6.2	6.2	6.2	6.2	6.2	6.2	6.2	6.2	6.2	6.2	6.2
	21	SHC	3.5	3.5	3.5	3.5	3.5	3.5	3.5	3.5	3.5	3.5	3.5	3.5	3.5	3.5	3.5
	23	SHC	3.9	3.9	3.9	3.9	3.9	3.9	3.9	3.9	3.9	3.9	3.9	3.9	3.9	3.9	3.9
	25	SHC	4.4	4.4	4.4	4.4	4.4	4.4	4.4	4.4	4.4	4.4	4.4	4.4	4.4	4.4	4.4
	27	SHC	4.9	4.9	4.9	4.9	4.9	4.9	4.9	4.9	4.9	4.9	4.9	4.9	4.9	4.9	4.9
	29	SHC	5.3	5.3	5.3	5.3	5.3	5.3	5.3	5.3	5.3	5.3	5.3	5.3	5.3	5.3	5.3
18		TC	6.6	6.6	6.6	6.6	6.6	6.6	6.6	6.6	6.6	6.6	6.6	6.6	6.6	6.6	6.6
	21	SHC	3.4	3.4	3.4	3.4	3.4	3.4	3.4	3.4	3.4	3.4	3.4	3.4	3.4	3.4	3.4
	23	SHC	3.8	3.8	3.8	3.8	3.8	3.8	3.8	3.8	3.8	3.8	3.8	3.8	3.8	3.8	3.8
	25	SHC	4.3	4.3	4.3	4.3	4.3	4.3	4.3	4.3	4.3	4.3	4.3	4.3	4.3	4.3	4.3
	27	SHC	4.7	4.7	4.7	4.7	4.7	4.7	4.7	4.7	4.7	4.7	4.7	4.7	4.7	4.7	4.7
	29	SHC	5.2	5.2	5.2	5.2	5.2	5.2	5.2	5.2	5.2	5.2	5.2	5.2	5.2	5.2	5.2
	31	SHC	5.7	5.7	5.7	5.7	5.7	5.7	5.7	5.7	5.7	5.7	5.7	5.7	5.7	5.7	5.7
19		TC	7.1	7.1	7.1	7.1	7.1	7.1	7.1	7.1	7.1	7.1	7.1	7.1	7.1	7.1	7.1
	21	SHC	3.2	3.2	3.2	3.2	3.2	3.2	3.2	3.2	3.2	3.2	3.2	3.2	3.2	3.2	3.2
	23	SHC	3.7	3.7	3.7	3.7	3.7	3.7	3.7	3.7	3.7	3.7	3.7	3.7	3.7	3.7	3.7
	25	SHC	4.2	4.2	4.2	4.2	4.2	4.2	4.2	4.2	4.2	4.2	4.2	4.2	4.2	4.2	4.2
	27	SHC	4.6	4.6	4.6	4.6	4.6	4.6	4.6	4.6	4.6	4.6	4.6	4.6	4.6	4.6	4.6
	29	SHC	5.1	5.1	5.1	5.1	5.1	5.1	5.1	5.1	5.1	5.1	5.1	5.1	5.1	5.1	5.1
	31	SHC	5.6	5.6	5.6	5.6	5.6	5.6	5.6	5.6	5.6	5.6	5.6	5.6	5.6	5.6	5.6
20		TC	7.6	7.6	7.6	7.6	7.6	7.6	7.6	7.6	7.6	7.6	7.6	7.6	7.6	7.5	7.4
	23	SHC	3.6	3.6	3.6	3.6	3.6	3.6	3.6	3.6	3.6	3.6	3.6	3.6	3.6	3.5	3.5
	25	SHC	4.0	4.0	4.0	4.0	4.0	4.0	4.0	4.0	4.0	4.0	4.0	4.0	4.0	4.0	4.0
	27	SHC	4.5	4.5	4.5	4.5	4.5	4.5	4.5	4.5	4.5	4.5	4.5	4.5	4.5	4.5	4.4
	29	SHC	5.0	5.0	5.0	5.0	5.0	5.0	5.0	5.0	5.0	5.0	5.0	5.0	5.0	4.9	4.9
	31	SHC	5.4	5.4	5.4	5.4	5.4	5.4	5.4	5.4	5.4	5.4	5.4	5.4	5.4	5.4	5.4
21		TC	8.0	8.0	8.0	8.0	8.0	8.0	8.0	8.0	8.0	8.0	8.0	8.0	7.9	7.7	7.6
	23	SHC	3.4	3.4	3.4	3.4	3.4	3.4	3.4	3.4	3.4	3.4	3.4	3.4	3.4	3.3	3.2
	25	SHC	3.9	3.9	3.9	3.9	3.9	3.9	3.9	3.9	3.9	3.9	3.9	3.9	3.8	3.7	3.7
	27	SHC	4.3	4.3	4.3	4.3	4.3	4.3	4.3	4.3	4.3	4.3	4.3	4.3	4.3	4.2	4.1
	29	SHC	4.8	4.8	4.8	4.8	4.8	4.8	4.8	4.8	4.8	4.8	4.8	4.8	4.8	4.7	4.6
	31	SHC	5.3	5.3	5.3	5.3	5.3	5.3	5.3	5.3	5.3	5.3	5.3	5.3	5.2	5.1	5.1
22		TC	8.5	8.5	8.5	8.5	8.5	8.5	8.5	8.5	8.5	8.5	8.5	8.3	8.1	7.9	7.7
	25	SHC	3.7	3.7	3.7	3.7	3.7	3.7	3.7	3.7	3.7	3.7	3.7	3.6	3.5	3.4	3.4
	27	SHC	4.2	4.2	4.2	4.2	4.2	4.2	4.2	4.2	4.2	4.2	4.2	4.1	4.0	3.9	3.8
	29	SHC	4.7	4.7	4.7	4.7	4.7	4.7	4.7	4.7	4.7	4.7	4.7	4.6	4.5	4.4	4.3
	31	SHC	5.1	5.1	5.1	5.1	5.1	5.1	5.1	5.1	5.1	5.1	5.1	5.0	4.9	4.8	4.8
23		TC	9.0	9.0	9.0	9.0	9.0	9.0	9.0	9.0	9.0	9.0	8.7	8.5	8.3	8.0	7.9
	25	SHC	3.6	3.6	3.6	3.6	3.6	3.6	3.6	3.6	3.6	3.6	3.4	3.3	3.2	3.1	3.1
	27	SHC	4.0	4.0	4.0	4.0	4.0	4.0	4.0	4.0	4.0	4.0	3.9	3.8	3.7	3.6	3.6
	29	SHC	4.5	4.5	4.5	4.5	4.5	4.5	4.5	4.5	4.5	4.5	4.4	4.3	4.2	4.1	4.0
	31	SHC	5.0	5.0	5.0	5.0	5.0	5.0	5.0	5.0	5.0	5.0	4.8	4.7	4.6	4.5	4.5

3. Cooling Capacity of Indoor Unit

3-13. 1-Way Cassette Type (D1 Type)

- S-28MD1E5

Power supply : 220/230/240V 1phase-50,60Hz TC : Total Cooling Capacity (kW) SHC : Sensible Heat Capacity (kW)

This data is when the indoor unit connects with 16HP outdoor unit.

RATING CAPACITY:		2.8 kW	AIR FLOW RATE: 12.0 m³/min														
EVAPORATOR			CONDENSER														
AIR INTAKE. TEMP			AMBIENT TEMP. (°C)														
W.B.	D.B.		15	17	19	21	23	25	27	29	31	33	35	37	39	41	43
14		TC	1.9	1.9	1.9	1.9	1.9	1.9	1.9	1.9	1.9	1.9	1.9	1.9	1.9	1.9	1.9
	21	SHC	1.9	1.9	1.9	1.9	1.9	1.9	1.9	1.9	1.9	1.9	1.9	1.9	1.9	1.9	1.9
	23	SHC	1.9	1.9	1.9	1.9	1.9	1.9	1.9	1.9	1.9	1.9	1.9	1.9	1.9	1.9	1.9
	25	SHC	1.9	1.9	1.9	1.9	1.9	1.9	1.9	1.9	1.9	1.9	1.9	1.9	1.9	1.9	1.9
	27	SHC	1.9	1.9	1.9	1.9	1.9	1.9	1.9	1.9	1.9	1.9	1.9	1.9	1.9	1.9	1.9
15		TC	2.1	2.1	2.1	2.1	2.1	2.1	2.1	2.1	2.1	2.1	2.1	2.1	2.1	2.1	2.1
	21	SHC	1.9	1.9	1.9	1.9	1.9	1.9	1.9	1.9	1.9	1.9	1.9	1.9	1.9	1.9	1.9
	23	SHC	2.1	2.1	2.1	2.1	2.1	2.1	2.1	2.1	2.1	2.1	2.1	2.1	2.1	2.1	2.1
	25	SHC	2.1	2.1	2.1	2.1	2.1	2.1	2.1	2.1	2.1	2.1	2.1	2.1	2.1	2.1	2.1
	27	SHC	2.1	2.1	2.1	2.1	2.1	2.1	2.1	2.1	2.1	2.1	2.1	2.1	2.1	2.1	2.1
16		TC	2.2	2.2	2.2	2.2	2.2	2.2	2.2	2.2	2.2	2.2	2.2	2.2	2.2	2.2	2.2
	21	SHC	1.7	1.7	1.7	1.7	1.7	1.7	1.7	1.7	1.7	1.7	1.7	1.7	1.7	1.7	1.7
	23	SHC	2.1	2.1	2.1	2.1	2.1	2.1	2.1	2.1	2.1	2.1	2.1	2.1	2.1	2.1	2.1
	25	SHC	2.2	2.2	2.2	2.2	2.2	2.2	2.2	2.2	2.2	2.2	2.2	2.2	2.2	2.2	2.2
	27	SHC	2.2	2.2	2.2	2.2	2.2	2.2	2.2	2.2	2.2	2.2	2.2	2.2	2.2	2.2	2.2
	29	SHC	2.2	2.2	2.2	2.2	2.2	2.2	2.2	2.2	2.2	2.2	2.2	2.2	2.2	2.2	2.2
17		TC	2.4	2.4	2.4	2.4	2.4	2.4	2.4	2.4	2.4	2.4	2.4	2.4	2.4	2.4	2.4
	21	SHC	1.6	1.6	1.6	1.6	1.6	1.6	1.6	1.6	1.6	1.6	1.6	1.6	1.6	1.6	1.6
	23	SHC	2.0	2.0	2.0	2.0	2.0	2.0	2.0	2.0	2.0	2.0	2.0	2.0	2.0	2.0	2.0
	25	SHC	2.3	2.3	2.3	2.3	2.3	2.3	2.3	2.3	2.3	2.3	2.3	2.3	2.3	2.3	2.3
	27	SHC	2.4	2.4	2.4	2.4	2.4	2.4	2.4	2.4	2.4	2.4	2.4	2.4	2.4	2.4	2.4
	29	SHC	2.4	2.4	2.4	2.4	2.4	2.4	2.4	2.4	2.4	2.4	2.4	2.4	2.4	2.4	2.4
18		TC	2.6	2.6	2.6	2.6	2.6	2.6	2.6	2.6	2.6	2.6	2.6	2.6	2.6	2.6	2.6
	21	SHC	1.5	1.5	1.5	1.5	1.5	1.5	1.5	1.5	1.5	1.5	1.5	1.5	1.5	1.5	1.5
	23	SHC	1.8	1.8	1.8	1.8	1.8	1.8	1.8	1.8	1.8	1.8	1.8	1.8	1.8	1.8	1.8
	25	SHC	2.2	2.2	2.2	2.2	2.2	2.2	2.2	2.2	2.2	2.2	2.2	2.2	2.2	2.2	2.2
	27	SHC	2.5	2.5	2.5	2.5	2.5	2.5	2.5	2.5	2.5	2.5	2.5	2.5	2.5	2.5	2.5
	29	SHC	2.6	2.6	2.6	2.6	2.6	2.6	2.6	2.6	2.6	2.6	2.6	2.6	2.6	2.6	2.6
	31	SHC	2.6	2.6	2.6	2.6	2.6	2.6	2.6	2.6	2.6	2.6	2.6	2.6	2.6	2.6	2.6
19		TC	2.8	2.8	2.8	2.8	2.8	2.8	2.8	2.8	2.8	2.8	2.8	2.8	2.8	2.8	2.8
	21	SHC	1.3	1.3	1.3	1.3	1.3	1.3	1.3	1.3	1.3	1.3	1.3	1.3	1.3	1.3	1.3
	23	SHC	1.7	1.7	1.7	1.7	1.7	1.7	1.7	1.7	1.7	1.7	1.7	1.7	1.7	1.7	1.7
	25	SHC	2.0	2.0	2.0	2.0	2.0	2.0	2.0	2.0	2.0	2.0	2.0	2.0	2.0	2.0	2.0
	27	SHC	2.4	2.4	2.4	2.4	2.4	2.4	2.4	2.4	2.4	2.4	2.4	2.4	2.4	2.4	2.4
	29	SHC	2.7	2.7	2.7	2.7	2.7	2.7	2.7	2.7	2.7	2.7	2.7	2.7	2.7	2.7	2.7
	31	SHC	2.8	2.8	2.8	2.8	2.8	2.8	2.8	2.8	2.8	2.8	2.8	2.8	2.8	2.8	2.8
20		TC	3.0	3.0	3.0	3.0	3.0	3.0	3.0	3.0	3.0	3.0	3.0	3.0	3.0	3.0	2.9
	23	SHC	1.5	1.5	1.5	1.5	1.5	1.5	1.5	1.5	1.5	1.5	1.5	1.5	1.5	1.5	1.5
	25	SHC	1.9	1.9	1.9	1.9	1.9	1.9	1.9	1.9	1.9	1.9	1.9	1.9	1.9	1.9	1.9
	27	SHC	2.2	2.2	2.2	2.2	2.2	2.2	2.2	2.2	2.2	2.2	2.2	2.2	2.2	2.2	2.2
	29	SHC	2.6	2.6	2.6	2.6	2.6	2.6	2.6	2.6	2.6	2.6	2.6	2.6	2.6	2.6	2.6
	31	SHC	2.9	2.9	2.9	2.9	2.9	2.9	2.9	2.9	2.9	2.9	2.9	2.9	2.9	2.9	2.9
21		TC	3.2	3.2	3.2	3.2	3.2	3.2	3.2	3.2	3.2	3.2	3.2	3.2	3.1	3.0	3.0
	23	SHC	1.4	1.4	1.4	1.4	1.4	1.4	1.4	1.4	1.4	1.4	1.4	1.4	1.4	1.3	1.3
	25	SHC	1.7	1.7	1.7	1.7	1.7	1.7	1.7	1.7	1.7	1.7	1.7	1.7	1.7	1.7	1.7
	27	SHC	2.1	2.1	2.1	2.1	2.1	2.1	2.1	2.1	2.1	2.1	2.1	2.1	2.1	2.0	2.0
	29	SHC	2.5	2.5	2.5	2.5	2.5	2.5	2.5	2.5	2.5	2.5	2.5	2.5	2.4	2.4	2.4
	31	SHC	2.8	2.8	2.8	2.8	2.8	2.8	2.8	2.8	2.8	2.8	2.8	2.8	2.8	2.7	2.7
22		TC	3.4	3.4	3.4	3.4	3.4	3.4	3.4	3.4	3.4	3.4	3.4	3.3	3.2	3.1	3.1
	25	SHC	1.6	1.6	1.6	1.6	1.6	1.6	1.6	1.6	1.6	1.6	1.6	1.6	1.5	1.5	1.5
	27	SHC	1.9	1.9	1.9	1.9	1.9	1.9	1.9	1.9	1.9	1.9	1.9	1.9	1.9	1.9	1.8
	29	SHC	2.3	2.3	2.3	2.3	2.3	2.3	2.3	2.3	2.3	2.3	2.3	2.3	2.2	2.2	2.2
	31	SHC	2.7	2.7	2.7	2.7	2.7	2.7	2.7	2.7	2.7	2.7	2.7	2.6	2.6	2.6	2.5
23		TC	3.5	3.5	3.5	3.5	3.5	3.5	3.5	3.5	3.5	3.5	3.4	3.3	3.3	3.2	3.1
	25	SHC	1.4	1.4	1.4	1.4	1.4	1.4	1.4	1.4	1.4	1.4	1.4	1.4	1.3	1.3	1.3
	27	SHC	1.8	1.8	1.8	1.8	1.8	1.8	1.8	1.8	1.8	1.8	1.8	1.7	1.7	1.6	1.6
	29	SHC	2.1	2.1	2.1	2.1	2.1	2.1	2.1	2.1	2.1	2.1	2.1	2.1	2.0	2.0	2.0
	31	SHC	2.5	2.5	2.5	2.5	2.5	2.5	2.5	2.5	2.5	2.5	2.5	2.4	2.4	2.4	2.3

3. Cooling Capacity of Indoor Unit

- S-36MD1E5

Power supply : 220/230/240V 1phase-50,60Hz TC : Total Cooling Capacity (kW) SHC : Sensible Heat Capacity (kW)
This data is when the indoor unit connects with 16HP outdoor unit.

RATING CAPACITY:		3.6 kW	AIR FLOW RATE: 12.0 m³/min														
EVAPORATOR			CONDENSER														
AIR INTAKE. TEMP			AMBIENT TEMP. (°C)														
W.B.	D.B.		15	17	19	21	23	25	27	29	31	33	35	37	39	41	43
14		TC	2.4	2.4	2.4	2.4	2.4	2.4	2.4	2.4	2.4	2.4	2.4	2.4	2.4	2.4	2.4
	21	SHC	2.2	2.2	2.2	2.2	2.2	2.2	2.2	2.2	2.2	2.2	2.2	2.2	2.2	2.2	2.2
	23	SHC	2.4	2.4	2.4	2.4	2.4	2.4	2.4	2.4	2.4	2.4	2.4	2.4	2.4	2.4	2.4
	25	SHC	2.4	2.4	2.4	2.4	2.4	2.4	2.4	2.4	2.4	2.4	2.4	2.4	2.4	2.4	2.4
	27	SHC	2.4	2.4	2.4	2.4	2.4	2.4	2.4	2.4	2.4	2.4	2.4	2.4	2.4	2.4	2.4
15		TC	2.6	2.6	2.6	2.6	2.6	2.6	2.6	2.6	2.6	2.6	2.6	2.6	2.6	2.6	2.6
	21	SHC	2.1	2.1	2.1	2.1	2.1	2.1	2.1	2.1	2.1	2.1	2.1	2.1	2.1	2.1	2.1
	23	SHC	2.5	2.5	2.5	2.5	2.5	2.5	2.5	2.5	2.5	2.5	2.5	2.5	2.5	2.5	2.5
	25	SHC	2.6	2.6	2.6	2.6	2.6	2.6	2.6	2.6	2.6	2.6	2.6	2.6	2.6	2.6	2.6
	27	SHC	2.6	2.6	2.6	2.6	2.6	2.6	2.6	2.6	2.6	2.6	2.6	2.6	2.6	2.6	2.6
16		TC	2.9	2.9	2.9	2.9	2.9	2.9	2.9	2.9	2.9	2.9	2.9	2.9	2.9	2.9	2.9
	21	SHC	2.0	2.0	2.0	2.0	2.0	2.0	2.0	2.0	2.0	2.0	2.0	2.0	2.0	2.0	2.0
	23	SHC	2.4	2.4	2.4	2.4	2.4	2.4	2.4	2.4	2.4	2.4	2.4	2.4	2.4	2.4	2.4
	25	SHC	2.7	2.7	2.7	2.7	2.7	2.7	2.7	2.7	2.7	2.7	2.7	2.7	2.7	2.7	2.7
	27	SHC	2.9	2.9	2.9	2.9	2.9	2.9	2.9	2.9	2.9	2.9	2.9	2.9	2.9	2.9	2.9
	29	SHC	2.9	2.9	2.9	2.9	2.9	2.9	2.9	2.9	2.9	2.9	2.9	2.9	2.9	2.9	2.9
17		TC	3.1	3.1	3.1	3.1	3.1	3.1	3.1	3.1	3.1	3.1	3.1	3.1	3.1	3.1	3.1
	21	SHC	1.9	1.9	1.9	1.9	1.9	1.9	1.9	1.9	1.9	1.9	1.9	1.9	1.9	1.9	1.9
	23	SHC	2.2	2.2	2.2	2.2	2.2	2.2	2.2	2.2	2.2	2.2	2.2	2.2	2.2	2.2	2.2
	25	SHC	2.6	2.6	2.6	2.6	2.6	2.6	2.6	2.6	2.6	2.6	2.6	2.6	2.6	2.6	2.6
	27	SHC	2.9	2.9	2.9	2.9	2.9	2.9	2.9	2.9	2.9	2.9	2.9	2.9	2.9	2.9	2.9
	29	SHC	3.1	3.1	3.1	3.1	3.1	3.1	3.1	3.1	3.1	3.1	3.1	3.1	3.1	3.1	3.1
18		TC	3.4	3.4	3.4	3.4	3.4	3.4	3.4	3.4	3.4	3.4	3.4	3.4	3.4	3.4	3.4
	21	SHC	1.8	1.8	1.8	1.8	1.8	1.8	1.8	1.8	1.8	1.8	1.8	1.8	1.8	1.8	1.8
	23	SHC	2.1	2.1	2.1	2.1	2.1	2.1	2.1	2.1	2.1	2.1	2.1	2.1	2.1	2.1	2.1
	25	SHC	2.5	2.5	2.5	2.5	2.5	2.5	2.5	2.5	2.5	2.5	2.5	2.5	2.5	2.5	2.5
	27	SHC	2.8	2.8	2.8	2.8	2.8	2.8	2.8	2.8	2.8	2.8	2.8	2.8	2.8	2.8	2.8
	29	SHC	3.2	3.2	3.2	3.2	3.2	3.2	3.2	3.2	3.2	3.2	3.2	3.2	3.2	3.2	3.2
	31	SHC	3.4	3.4	3.4	3.4	3.4	3.4	3.4	3.4	3.4	3.4	3.4	3.4	3.4	3.4	3.4
19		TC	3.6	3.6	3.6	3.6	3.6	3.6	3.6	3.6	3.6	3.6	3.6	3.6	3.6	3.6	3.6
	21	SHC	1.7	1.7	1.7	1.7	1.7	1.7	1.7	1.7	1.7	1.7	1.7	1.7	1.7	1.7	1.7
	23	SHC	2.0	2.0	2.0	2.0	2.0	2.0	2.0	2.0	2.0	2.0	2.0	2.0	2.0	2.0	2.0
	25	SHC	2.3	2.3	2.3	2.3	2.3	2.3	2.3	2.3	2.3	2.3	2.3	2.3	2.3	2.3	2.3
	27	SHC	2.7	2.7	2.7	2.7	2.7	2.7	2.7	2.7	2.7	2.7	2.7	2.7	2.7	2.7	2.7
	29	SHC	3.0	3.0	3.0	3.0	3.0	3.0	3.0	3.0	3.0	3.0	3.0	3.0	3.0	3.0	3.0
	31	SHC	3.4	3.4	3.4	3.4	3.4	3.4	3.4	3.4	3.4	3.4	3.4	3.4	3.4	3.4	3.4
20		TC	3.8	3.8	3.8	3.8	3.8	3.8	3.8	3.8	3.8	3.8	3.8	3.8	3.8	3.8	3.8
	23	SHC	1.9	1.9	1.9	1.9	1.9	1.9	1.9	1.9	1.9	1.9	1.9	1.9	1.9	1.9	1.8
	25	SHC	2.2	2.2	2.2	2.2	2.2	2.2	2.2	2.2	2.2	2.2	2.2	2.2	2.2	2.2	2.2
	27	SHC	2.6	2.6	2.6	2.6	2.6	2.6	2.6	2.6	2.6	2.6	2.6	2.6	2.6	2.6	2.5
	29	SHC	2.9	2.9	2.9	2.9	2.9	2.9	2.9	2.9	2.9	2.9	2.9	2.9	2.9	2.9	2.9
	31	SHC	3.3	3.3	3.3	3.3	3.3	3.3	3.3	3.3	3.3	3.3	3.3	3.3	3.3	3.2	3.2
21		TC	4.1	4.1	4.1	4.1	4.1	4.1	4.1	4.1	4.1	4.1	4.1	4.1	4.0	3.9	3.8
	23	SHC	1.7	1.7	1.7	1.7	1.7	1.7	1.7	1.7	1.7	1.7	1.7	1.7	1.7	1.7	1.6
	25	SHC	2.1	2.1	2.1	2.1	2.1	2.1	2.1	2.1	2.1	2.1	2.1	2.1	2.1	2.0	2.0
	27	SHC	2.4	2.4	2.4	2.4	2.4	2.4	2.4	2.4	2.4	2.4	2.4	2.4	2.4	2.4	2.3
	29	SHC	2.8	2.8	2.8	2.8	2.8	2.8	2.8	2.8	2.8	2.8	2.8	2.8	2.7	2.7	2.7
	31	SHC	3.1	3.1	3.1	3.1	3.1	3.1	3.1	3.1	3.1	3.1	3.1	3.1	3.1	3.1	3.0
22		TC	4.3	4.3	4.3	4.3	4.3	4.3	4.3	4.3	4.3	4.3	4.3	4.2	4.1	4.0	3.9
	25	SHC	1.9	1.9	1.9	1.9	1.9	1.9	1.9	1.9	1.9	1.9	1.9	1.9	1.9	1.8	1.8
	27	SHC	2.3	2.3	2.3	2.3	2.3	2.3	2.3	2.3	2.3	2.3	2.3	2.2	2.2	2.2	2.1
	29	SHC	2.6	2.6	2.6	2.6	2.6	2.6	2.6	2.6	2.6	2.6	2.6	2.6	2.5	2.5	2.5
	31	SHC	3.0	3.0	3.0	3.0	3.0	3.0	3.0	3.0	3.0	3.0	3.0	2.9	2.9	2.8	2.8
23		TC	4.6	4.6	4.6	4.6	4.6	4.6	4.6	4.6	4.6	4.6	4.4	4.3	4.2	4.1	4.0
	25	SHC	1.8	1.8	1.8	1.8	1.8	1.8	1.8	1.8	1.8	1.8	1.7	1.7	1.6	1.6	1.6
	27	SHC	2.1	2.1	2.1	2.1	2.1	2.1	2.1	2.1	2.1	2.1	2.1	2.0	2.0	2.0	1.9
	29	SHC	2.5	2.5	2.5	2.5	2.5	2.5	2.5	2.5	2.5	2.5	2.4	2.4	2.3	2.3	2.3
	31	SHC	2.8	2.8	2.8	2.8	2.8	2.8	2.8	2.8	2.8	2.8	2.8	2.7	2.7	2.7	2.6

3. Cooling Capacity of Indoor Unit

● S-45MD1E5

Power supply : 220/230/240V 1phase-50,60Hz TC : Total Cooling Capacity (kW) SHC : Sensible Heat Capacity (kW)

This data is when the indoor unit connects with 16HP outdoor unit.

RATING CAPACITY:		4.5 kW	AIR FLOW RATE: 12.0 m³/min														
EVAPORATOR			CONDENSER														
AIR INTAKE. TEMP			AMBIENT TEMP. (°C)														
W.B.	D.B.		15	17	19	21	23	25	27	29	31	33	35	37	39	41	43
14		TC	3.0	3.0	3.0	3.0	3.0	3.0	3.0	3.0	3.0	3.0	3.0	3.0	3.0	3.0	3.0
	21	SHC	3.0	3.0	3.0	3.0	3.0	3.0	3.0	3.0	3.0	3.0	3.0	3.0	3.0	3.0	3.0
	23	SHC	3.0	3.0	3.0	3.0	3.0	3.0	3.0	3.0	3.0	3.0	3.0	3.0	3.0	3.0	3.0
	25	SHC	3.0	3.0	3.0	3.0	3.0	3.0	3.0	3.0	3.0	3.0	3.0	3.0	3.0	3.0	3.0
	27	SHC	3.0	3.0	3.0	3.0	3.0	3.0	3.0	3.0	3.0	3.0	3.0	3.0	3.0	3.0	3.0
15		TC	3.3	3.3	3.3	3.3	3.3	3.3	3.3	3.3	3.3	3.3	3.3	3.3	3.3	3.3	3.3
	21	SHC	2.8	2.8	2.8	2.8	2.8	2.8	2.8	2.8	2.8	2.8	2.8	2.8	2.8	2.8	2.8
	23	SHC	3.3	3.3	3.3	3.3	3.3	3.3	3.3	3.3	3.3	3.3	3.3	3.3	3.3	3.3	3.3
	25	SHC	3.3	3.3	3.3	3.3	3.3	3.3	3.3	3.3	3.3	3.3	3.3	3.3	3.3	3.3	3.3
	27	SHC	3.3	3.3	3.3	3.3	3.3	3.3	3.3	3.3	3.3	3.3	3.3	3.3	3.3	3.3	3.3
16		TC	3.6	3.6	3.6	3.6	3.6	3.6	3.6	3.6	3.6	3.6	3.6	3.6	3.6	3.6	3.6
	21	SHC	2.6	2.6	2.6	2.6	2.6	2.6	2.6	2.6	2.6	2.6	2.6	2.6	2.6	2.6	2.6
	23	SHC	3.1	3.1	3.1	3.1	3.1	3.1	3.1	3.1	3.1	3.1	3.1	3.1	3.1	3.1	3.1
	25	SHC	3.6	3.6	3.6	3.6	3.6	3.6	3.6	3.6	3.6	3.6	3.6	3.6	3.6	3.6	3.6
	27	SHC	3.6	3.6	3.6	3.6	3.6	3.6	3.6	3.6	3.6	3.6	3.6	3.6	3.6	3.6	3.6
	29	SHC	3.6	3.6	3.6	3.6	3.6	3.6	3.6	3.6	3.6	3.6	3.6	3.6	3.6	3.6	3.6
17		TC	3.9	3.9	3.9	3.9	3.9	3.9	3.9	3.9	3.9	3.9	3.9	3.9	3.9	3.9	3.9
	21	SHC	2.5	2.5	2.5	2.5	2.5	2.5	2.5	2.5	2.5	2.5	2.5	2.5	2.5	2.5	2.5
	23	SHC	3.0	3.0	3.0	3.0	3.0	3.0	3.0	3.0	3.0	3.0	3.0	3.0	3.0	3.0	3.0
	25	SHC	3.5	3.5	3.5	3.5	3.5	3.5	3.5	3.5	3.5	3.5	3.5	3.5	3.5	3.5	3.5
	27	SHC	3.9	3.9	3.9	3.9	3.9	3.9	3.9	3.9	3.9	3.9	3.9	3.9	3.9	3.9	3.9
	29	SHC	3.9	3.9	3.9	3.9	3.9	3.9	3.9	3.9	3.9	3.9	3.9	3.9	3.9	3.9	3.9
18		TC	4.2	4.2	4.2	4.2	4.2	4.2	4.2	4.2	4.2	4.2	4.2	4.2	4.2	4.2	4.2
	21	SHC	2.3	2.3	2.3	2.3	2.3	2.3	2.3	2.3	2.3	2.3	2.3	2.3	2.3	2.3	2.3
	23	SHC	2.8	2.8	2.8	2.8	2.8	2.8	2.8	2.8	2.8	2.8	2.8	2.8	2.8	2.8	2.8
	25	SHC	3.3	3.3	3.3	3.3	3.3	3.3	3.3	3.3	3.3	3.3	3.3	3.3	3.3	3.3	3.3
	27	SHC	3.8	3.8	3.8	3.8	3.8	3.8	3.8	3.8	3.8	3.8	3.8	3.8	3.8	3.8	3.8
	29	SHC	4.2	4.2	4.2	4.2	4.2	4.2	4.2	4.2	4.2	4.2	4.2	4.2	4.2	4.2	4.2
	31	SHC	4.2	4.2	4.2	4.2	4.2	4.2	4.2	4.2	4.2	4.2	4.2	4.2	4.2	4.2	4.2
19		TC	4.5	4.5	4.5	4.5	4.5	4.5	4.5	4.5	4.5	4.5	4.5	4.5	4.5	4.5	4.5
	21	SHC	2.1	2.1	2.1	2.1	2.1	2.1	2.1	2.1	2.1	2.1	2.1	2.1	2.1	2.1	2.1
	23	SHC	2.6	2.6	2.6	2.6	2.6	2.6	2.6	2.6	2.6	2.6	2.6	2.6	2.6	2.6	2.6
	25	SHC	3.1	3.1	3.1	3.1	3.1	3.1	3.1	3.1	3.1	3.1	3.1	3.1	3.1	3.1	3.1
	27	SHC	3.6	3.6	3.6	3.6	3.6	3.6	3.6	3.6	3.6	3.6	3.6	3.6	3.6	3.6	3.6
	29	SHC	4.1	4.1	4.1	4.1	4.1	4.1	4.1	4.1	4.1	4.1	4.1	4.1	4.1	4.1	4.1
	31	SHC	4.5	4.5	4.5	4.5	4.5	4.5	4.5	4.5	4.5	4.5	4.5	4.5	4.5	4.5	4.5
20		TC	4.8	4.8	4.8	4.8	4.8	4.8	4.8	4.8	4.8	4.8	4.8	4.8	4.8	4.8	4.7
	23	SHC	2.4	2.4	2.4	2.4	2.4	2.4	2.4	2.4	2.4	2.4	2.4	2.4	2.4	2.4	2.4
	25	SHC	2.9	2.9	2.9	2.9	2.9	2.9	2.9	2.9	2.9	2.9	2.9	2.9	2.9	2.9	2.9
	27	SHC	3.4	3.4	3.4	3.4	3.4	3.4	3.4	3.4	3.4	3.4	3.4	3.4	3.4	3.4	3.3
	29	SHC	3.9	3.9	3.9	3.9	3.9	3.9	3.9	3.9	3.9	3.9	3.9	3.9	3.9	3.9	3.8
	31	SHC	4.4	4.4	4.4	4.4	4.4	4.4	4.4	4.4	4.4	4.4	4.4	4.4	4.4	4.4	4.3
21		TC	5.1	5.1	5.1	5.1	5.1	5.1	5.1	5.1	5.1	5.1	5.1	5.1	5.0	4.9	4.8
	23	SHC	2.2	2.2	2.2	2.2	2.2	2.2	2.2	2.2	2.2	2.2	2.2	2.2	2.2	2.1	2.1
	25	SHC	2.7	2.7	2.7	2.7	2.7	2.7	2.7	2.7	2.7	2.7	2.7	2.7	2.7	2.6	2.6
	27	SHC	3.2	3.2	3.2	3.2	3.2	3.2	3.2	3.2	3.2	3.2	3.2	3.2	3.2	3.1	3.1
	29	SHC	3.7	3.7	3.7	3.7	3.7	3.7	3.7	3.7	3.7	3.7	3.7	3.7	3.6	3.6	3.6
	31	SHC	4.2	4.2	4.2	4.2	4.2	4.2	4.2	4.2	4.2	4.2	4.2	4.2	4.2	4.1	4.1
22		TC	5.4	5.4	5.4	5.4	5.4	5.4	5.4	5.4	5.4	5.4	5.4	5.3	5.1	5.0	4.9
	25	SHC	2.5	2.5	2.5	2.5	2.5	2.5	2.5	2.5	2.5	2.5	2.5	2.4	2.4	2.3	2.3
	27	SHC	3.0	3.0	3.0	3.0	3.0	3.0	3.0	3.0	3.0	3.0	3.0	2.9	2.9	2.8	2.8
	29	SHC	3.5	3.5	3.5	3.5	3.5	3.5	3.5	3.5	3.5	3.5	3.5	3.4	3.4	3.3	3.3
	31	SHC	4.0	4.0	4.0	4.0	4.0	4.0	4.0	4.0	4.0	4.0	4.0	3.9	3.9	3.8	3.8
23		TC	5.7	5.7	5.7	5.7	5.7	5.7	5.7	5.7	5.7	5.7	5.5	5.4	5.2	5.1	5.0
	25	SHC	2.3	2.3	2.3	2.3	2.3	2.3	2.3	2.3	2.3	2.3	2.2	2.1	2.1	2.0	2.0
	27	SHC	2.8	2.8	2.8	2.8	2.8	2.8	2.8	2.8	2.8	2.8	2.7	2.6	2.6	2.5	2.5
	29	SHC	3.3	3.3	3.3	3.3	3.3	3.3	3.3	3.3	3.3	3.3	3.2	3.1	3.1	3.0	3.0
	31	SHC	3.8	3.8	3.8	3.8	3.8	3.8	3.8	3.8	3.8	3.8	3.7	3.6	3.6	3.5	3.5

3. Cooling Capacity of Indoor Unit

- S-56MD1E5

Power supply : 220/230/240V 1phase-50,60Hz TC : Total Cooling Capacity (kW) SHC : Sensible Heat Capacity (kW)

This data is when the indoor unit connects with 16HP outdoor unit.

RATING CAPACITY:		5.6 kW AIR FLOW RATE: 13.0 m³/min																
EVAPORATOR		CONDENSER																
AIR INTAKE. TEMP		AMBIENT TEMP. (°C)																
W.B.	D.B.		15	17	19	21	23	25	27	29	31	33	35	37	39	41	43
14		TC	3.7	3.7	3.7	3.7	3.7	3.7	3.7	3.7	3.7	3.7	3.7	3.7	3.7	3.7	3.7
	21	SHC	3.1	3.1	3.1	3.1	3.1	3.1	3.1	3.1	3.1	3.1	3.1	3.1	3.1	3.1	3.1
	23	SHC	3.6	3.6	3.6	3.6	3.6	3.6	3.6	3.6	3.6	3.6	3.6	3.6	3.6	3.6	3.6
	25	SHC	3.7	3.7	3.7	3.7	3.7	3.7	3.7	3.7	3.7	3.7	3.7	3.7	3.7	3.7	3.7
	27	SHC	3.7	3.7	3.7	3.7	3.7	3.7	3.7	3.7	3.7	3.7	3.7	3.7	3.7	3.7	3.7
15		TC	4.1	4.1	4.1	4.1	4.1	4.1	4.1	4.1	4.1	4.1	4.1	4.1	4.1	4.1	4.1
	21	SHC	3.0	3.0	3.0	3.0	3.0	3.0	3.0	3.0	3.0	3.0	3.0	3.0	3.0	3.0	3.0
	23	SHC	3.5	3.5	3.5	3.5	3.5	3.5	3.5	3.5	3.5	3.5	3.5	3.5	3.5	3.5	3.5
	25	SHC	3.9	3.9	3.9	3.9	3.9	3.9	3.9	3.9	3.9	3.9	3.9	3.9	3.9	3.9	3.9
	27	SHC	4.1	4.1	4.1	4.1	4.1	4.1	4.1	4.1	4.1	4.1	4.1	4.1	4.1	4.1	4.1
16		TC	4.5	4.5	4.5	4.5	4.5	4.5	4.5	4.5	4.5	4.5	4.5	4.5	4.5	4.5	4.5
	21	SHC	2.9	2.9	2.9	2.9	2.9	2.9	2.9	2.9	2.9	2.9	2.9	2.9	2.9	2.9	2.9
	23	SHC	3.3	3.3	3.3	3.3	3.3	3.3	3.3	3.3	3.3	3.3	3.3	3.3	3.3	3.3	3.3
	25	SHC	3.8	3.8	3.8	3.8	3.8	3.8	3.8	3.8	3.8	3.8	3.8	3.8	3.8	3.8	3.8
	27	SHC	4.2	4.2	4.2	4.2	4.2	4.2	4.2	4.2	4.2	4.2	4.2	4.2	4.2	4.2	4.2
	29	SHC	4.5	4.5	4.5	4.5	4.5	4.5	4.5	4.5	4.5	4.5	4.5	4.5	4.5	4.5	4.5
17		TC	4.9	4.9	4.9	4.9	4.9	4.9	4.9	4.9	4.9	4.9	4.9	4.9	4.9	4.9	4.9
	21	SHC	2.8	2.8	2.8	2.8	2.8	2.8	2.8	2.8	2.8	2.8	2.8	2.8	2.8	2.8	2.8
	23	SHC	3.2	3.2	3.2	3.2	3.2	3.2	3.2	3.2	3.2	3.2	3.2	3.2	3.2	3.2	3.2
	25	SHC	3.7	3.7	3.7	3.7	3.7	3.7	3.7	3.7	3.7	3.7	3.7	3.7	3.7	3.7	3.7
	27	SHC	4.1	4.1	4.1	4.1	4.1	4.1	4.1	4.1	4.1	4.1	4.1	4.1	4.1	4.1	4.1
	29	SHC	4.5	4.5	4.5	4.5	4.5	4.5	4.5	4.5	4.5	4.5	4.5	4.5	4.5	4.5	4.5
18		TC	5.2	5.2	5.2	5.2	5.2	5.2	5.2	5.2	5.2	5.2	5.2	5.2	5.2	5.2	5.2
	21	SHC	2.7	2.7	2.7	2.7	2.7	2.7	2.7	2.7	2.7	2.7	2.7	2.7	2.7	2.7	2.7
	23	SHC	3.1	3.1	3.1	3.1	3.1	3.1	3.1	3.1	3.1	3.1	3.1	3.1	3.1	3.1	3.1
	25	SHC	3.5	3.5	3.5	3.5	3.5	3.5	3.5	3.5	3.5	3.5	3.5	3.5	3.5	3.5	3.5
	27	SHC	4.0	4.0	4.0	4.0	4.0	4.0	4.0	4.0	4.0	4.0	4.0	4.0	4.0	4.0	4.0
	29	SHC	4.4	4.4	4.4	4.4	4.4	4.4	4.4	4.4	4.4	4.4	4.4	4.4	4.4	4.4	4.4
	31	SHC	4.8	4.8	4.8	4.8	4.8	4.8	4.8	4.8	4.8	4.8	4.8	4.8	4.8	4.8	4.8
19		TC	5.6	5.6	5.6	5.6	5.6	5.6	5.6	5.6	5.6	5.6	5.6	5.6	5.6	5.6	5.6
	21	SHC	2.5	2.5	2.5	2.5	2.5	2.5	2.5	2.5	2.5	2.5	2.5	2.5	2.5	2.5	2.5
	23	SHC	3.0	3.0	3.0	3.0	3.0	3.0	3.0	3.0	3.0	3.0	3.0	3.0	3.0	3.0	3.0
	25	SHC	3.4	3.4	3.4	3.4	3.4	3.4	3.4	3.4	3.4	3.4	3.4	3.4	3.4	3.4	3.4
	27	SHC	3.8	3.8	3.8	3.8	3.8	3.8	3.8	3.8	3.8	3.8	3.8	3.8	3.8	3.8	3.8
	29	SHC	4.3	4.3	4.3	4.3	4.3	4.3	4.3	4.3	4.3	4.3	4.3	4.3	4.3	4.3	4.3
	31	SHC	4.7	4.7	4.7	4.7	4.7	4.7	4.7	4.7	4.7	4.7	4.7	4.7	4.7	4.7	4.7
20		TC	6.0	6.0	6.0	6.0	6.0	6.0	6.0	6.0	6.0	6.0	6.0	6.0	6.0	5.9	5.9
	23	SHC	2.8	2.8	2.8	2.8	2.8	2.8	2.8	2.8	2.8	2.8	2.8	2.8	2.8	2.8	2.8
	25	SHC	3.3	3.3	3.3	3.3	3.3	3.3	3.3	3.3	3.3	3.3	3.3	3.3	3.3	3.2	3.2
	27	SHC	3.7	3.7	3.7	3.7	3.7	3.7	3.7	3.7	3.7	3.7	3.7	3.7	3.7	3.7	3.6
	29	SHC	4.1	4.1	4.1	4.1	4.1	4.1	4.1	4.1	4.1	4.1	4.1	4.1	4.1	4.1	4.1
	31	SHC	4.6	4.6	4.6	4.6	4.6	4.6	4.6	4.6	4.6	4.6	4.6	4.6	4.6	4.5	4.5
21		TC	6.3	6.3	6.3	6.3	6.3	6.3	6.3	6.3	6.3	6.3	6.3	6.3	6.3	6.1	6.0
	23	SHC	2.7	2.7	2.7	2.7	2.7	2.7	2.7	2.7	2.7	2.7	2.7	2.7	2.6	2.6	2.5
	25	SHC	3.1	3.1	3.1	3.1	3.1	3.1	3.1	3.1	3.1	3.1	3.1	3.1	3.1	3.0	3.0
	27	SHC	3.5	3.5	3.5	3.5	3.5	3.5	3.5	3.5	3.5	3.5	3.5	3.5	3.5	3.4	3.4
	29	SHC	4.0	4.0	4.0	4.0	4.0	4.0	4.0	4.0	4.0	4.0	4.0	4.0	3.9	3.9	3.8
	31	SHC	4.4	4.4	4.4	4.4	4.4	4.4	4.4	4.4	4.4	4.4	4.4	4.4	4.4	4.3	4.3
22		TC	6.7	6.7	6.7	6.7	6.7	6.7	6.7	6.7	6.7	6.7	6.7	6.6	6.4	6.2	6.1
	25	SHC	2.9	2.9	2.9	2.9	2.9	2.9	2.9	2.9	2.9	2.9	2.9	2.9	2.8	2.7	2.7
	27	SHC	3.4	3.4	3.4	3.4	3.4	3.4	3.4	3.4	3.4	3.4	3.4	3.3	3.2	3.2	3.1
	29	SHC	3.8	3.8	3.8	3.8	3.8	3.8	3.8	3.8	3.8	3.8	3.8	3.7	3.7	3.6	3.6
	31	SHC	4.2	4.2	4.2	4.2	4.2	4.2	4.2	4.2	4.2	4.2	4.2	4.2	4.1	4.0	4.0
23		TC	7.1	7.1	7.1	7.1	7.1	7.1	7.1	7.1	7.1	7.1	6.9	6.7	6.5	6.3	6.2
	25	SHC	2.8	2.8	2.8	2.8	2.8	2.8	2.8	2.8	2.8	2.8	2.7	2.6	2.5	2.5	2.4
	27	SHC	3.2	3.2	3.2	3.2	3.2	3.2	3.2	3.2	3.2	3.2	3.1	3.0	3.0	2.9	2.9
	29	SHC	3.6	3.6	3.6	3.6	3.6	3.6	3.6	3.6	3.6	3.6	3.6	3.5	3.4	3.3	3.3
	31	SHC	4.1	4.1	4.1	4.1	4.1	4.1	4.1	4.1	4.1	4.1	4.0	3.9	3.8	3.8	3.7

3. Cooling Capacity of Indoor Unit

● S-73MD1E5

Power supply : 220/230/240V 1phase-50,60Hz TC : Total Cooling Capacity (kW) SHC : Sensible Heat Capacity (kW)

This data is when the indoor unit connects with 16HP outdoor unit.

RATING CAPACITY:		7.3 kW	AIR FLOW RATE: 18.0 m³/min														
EVAPORATOR			CONDENSER														
AIR INTAKE. TEMP			AMBIENT TEMP. (°C)														
W.B.	D.B.		15	17	19	21	23	25	27	29	31	33	35	37	39	41	43
14		TC	4.9	4.9	4.9	4.9	4.9	4.9	4.9	4.9	4.9	4.9	4.9	4.9	4.9	4.9	4.9
	21	SHC	4.0	4.0	4.0	4.0	4.0	4.0	4.0	4.0	4.0	4.0	4.0	4.0	4.0	4.0	4.0
	23	SHC	4.6	4.6	4.6	4.6	4.6	4.6	4.6	4.6	4.6	4.6	4.6	4.6	4.6	4.6	4.6
	25	SHC	4.9	4.9	4.9	4.9	4.9	4.9	4.9	4.9	4.9	4.9	4.9	4.9	4.9	4.9	4.9
	27	SHC	4.9	4.9	4.9	4.9	4.9	4.9	4.9	4.9	4.9	4.9	4.9	4.9	4.9	4.9	4.9
15		TC	5.4	5.4	5.4	5.4	5.4	5.4	5.4	5.4	5.4	5.4	5.4	5.4	5.4	5.4	5.4
	21	SHC	3.9	3.9	3.9	3.9	3.9	3.9	3.9	3.9	3.9	3.9	3.9	3.9	3.9	3.9	3.9
	23	SHC	4.5	4.5	4.5	4.5	4.5	4.5	4.5	4.5	4.5	4.5	4.5	4.5	4.5	4.5	4.5
	25	SHC	5.0	5.0	5.0	5.0	5.0	5.0	5.0	5.0	5.0	5.0	5.0	5.0	5.0	5.0	5.0
	27	SHC	5.4	5.4	5.4	5.4	5.4	5.4	5.4	5.4	5.4	5.4	5.4	5.4	5.4	5.4	5.4
16		TC	5.8	5.8	5.8	5.8	5.8	5.8	5.8	5.8	5.8	5.8	5.8	5.8	5.8	5.8	5.8
	21	SHC	3.8	3.8	3.8	3.8	3.8	3.8	3.8	3.8	3.8	3.8	3.8	3.8	3.8	3.8	3.8
	23	SHC	4.3	4.3	4.3	4.3	4.3	4.3	4.3	4.3	4.3	4.3	4.3	4.3	4.3	4.3	4.3
	25	SHC	4.9	4.9	4.9	4.9	4.9	4.9	4.9	4.9	4.9	4.9	4.9	4.9	4.9	4.9	4.9
	27	SHC	5.4	5.4	5.4	5.4	5.4	5.4	5.4	5.4	5.4	5.4	5.4	5.4	5.4	5.4	5.4
	29	SHC	5.8	5.8	5.8	5.8	5.8	5.8	5.8	5.8	5.8	5.8	5.8	5.8	5.8	5.8	5.8
17		TC	6.3	6.3	6.3	6.3	6.3	6.3	6.3	6.3	6.3	6.3	6.3	6.3	6.3	6.3	6.3
	21	SHC	3.6	3.6	3.6	3.6	3.6	3.6	3.6	3.6	3.6	3.6	3.6	3.6	3.6	3.6	3.6
	23	SHC	4.2	4.2	4.2	4.2	4.2	4.2	4.2	4.2	4.2	4.2	4.2	4.2	4.2	4.2	4.2
	25	SHC	4.8	4.8	4.8	4.8	4.8	4.8	4.8	4.8	4.8	4.8	4.8	4.8	4.8	4.8	4.8
	27	SHC	5.3	5.3	5.3	5.3	5.3	5.3	5.3	5.3	5.3	5.3	5.3	5.3	5.3	5.3	5.3
	29	SHC	5.9	5.9	5.9	5.9	5.9	5.9	5.9	5.9	5.9	5.9	5.9	5.9	5.9	5.9	5.9
18		TC	6.8	6.8	6.8	6.8	6.8	6.8	6.8	6.8	6.8	6.8	6.8	6.8	6.8	6.8	6.8
	21	SHC	3.5	3.5	3.5	3.5	3.5	3.5	3.5	3.5	3.5	3.5	3.5	3.5	3.5	3.5	3.5
	23	SHC	4.0	4.0	4.0	4.0	4.0	4.0	4.0	4.0	4.0	4.0	4.0	4.0	4.0	4.0	4.0
	25	SHC	4.6	4.6	4.6	4.6	4.6	4.6	4.6	4.6	4.6	4.6	4.6	4.6	4.6	4.6	4.6
	27	SHC	5.1	5.1	5.1	5.1	5.1	5.1	5.1	5.1	5.1	5.1	5.1	5.1	5.1	5.1	5.1
	29	SHC	5.7	5.7	5.7	5.7	5.7	5.7	5.7	5.7	5.7	5.7	5.7	5.7	5.7	5.7	5.7
	31	SHC	6.3	6.3	6.3	6.3	6.3	6.3	6.3	6.3	6.3	6.3	6.3	6.3	6.3	6.3	6.3
19		TC	7.3	7.3	7.3	7.3	7.3	7.3	7.3	7.3	7.3	7.3	7.3	7.3	7.3	7.3	7.3
	21	SHC	3.3	3.3	3.3	3.3	3.3	3.3	3.3	3.3	3.3	3.3	3.3	3.3	3.3	3.3	3.3
	23	SHC	3.9	3.9	3.9	3.9	3.9	3.9	3.9	3.9	3.9	3.9	3.9	3.9	3.9	3.9	3.9
	25	SHC	4.4	4.4	4.4	4.4	4.4	4.4	4.4	4.4	4.4	4.4	4.4	4.4	4.4	4.4	4.4
	27	SHC	5.0	5.0	5.0	5.0	5.0	5.0	5.0	5.0	5.0	5.0	5.0	5.0	5.0	5.0	5.0
	29	SHC	5.5	5.5	5.5	5.5	5.5	5.5	5.5	5.5	5.5	5.5	5.5	5.5	5.5	5.5	5.5
	31	SHC	6.1	6.1	6.1	6.1	6.1	6.1	6.1	6.1	6.1	6.1	6.1	6.1	6.1	6.1	6.1
20		TC	7.8	7.8	7.8	7.8	7.8	7.8	7.8	7.8	7.8	7.8	7.8	7.8	7.8	7.8	7.6
	23	SHC	3.7	3.7	3.7	3.7	3.7	3.7	3.7	3.7	3.7	3.7	3.7	3.7	3.7	3.7	3.6
	25	SHC	4.2	4.2	4.2	4.2	4.2	4.2	4.2	4.2	4.2	4.2	4.2	4.2	4.2	4.2	4.2
	27	SHC	4.8	4.8	4.8	4.8	4.8	4.8	4.8	4.8	4.8	4.8	4.8	4.8	4.8	4.8	4.7
	29	SHC	5.4	5.4	5.4	5.4	5.4	5.4	5.4	5.4	5.4	5.4	5.4	5.4	5.4	5.3	5.3
	31	SHC	5.9	5.9	5.9	5.9	5.9	5.9	5.9	5.9	5.9	5.9	5.9	5.9	5.9	5.9	5.8
21		TC	8.3	8.3	8.3	8.3	8.3	8.3	8.3	8.3	8.3	8.3	8.3	8.3	8.2	7.9	7.8
	23	SHC	3.5	3.5	3.5	3.5	3.5	3.5	3.5	3.5	3.5	3.5	3.5	3.5	3.4	3.3	3.3
	25	SHC	4.0	4.0	4.0	4.0	4.0	4.0	4.0	4.0	4.0	4.0	4.0	4.0	4.0	3.9	3.8
	27	SHC	4.6	4.6	4.6	4.6	4.6	4.6	4.6	4.6	4.6	4.6	4.6	4.6	4.5	4.4	4.4
	29	SHC	5.1	5.1	5.1	5.1	5.1	5.1	5.1	5.1	5.1	5.1	5.1	5.1	5.1	5.0	5.0
	31	SHC	5.7	5.7	5.7	5.7	5.7	5.7	5.7	5.7	5.7	5.7	5.7	5.7	5.7	5.6	5.5
22		TC	8.8	8.8	8.8	8.8	8.8	8.8	8.8	8.8	8.8	8.8	8.8	8.6	8.3	8.1	8.0
	25	SHC	3.8	3.8	3.8	3.8	3.8	3.8	3.8	3.8	3.8	3.8	3.8	3.7	3.6	3.6	3.5
	27	SHC	4.4	4.4	4.4	4.4	4.4	4.4	4.4	4.4	4.4	4.4	4.4	4.3	4.2	4.1	4.1
	29	SHC	4.9	4.9	4.9	4.9	4.9	4.9	4.9	4.9	4.9	4.9	4.9	4.9	4.8	4.7	4.6
	31	SHC	5.5	5.5	5.5	5.5	5.5	5.5	5.5	5.5	5.5	5.5	5.5	5.4	5.3	5.2	5.2
23		TC	9.2	9.2	9.2	9.2	9.2	9.2	9.2	9.2	9.2	9.2	9.0	8.7	8.5	8.2	8.1
	25	SHC	3.6	3.6	3.6	3.6	3.6	3.6	3.6	3.6	3.6	3.6	3.5	3.4	3.3	3.2	3.2
	27	SHC	4.2	4.2	4.2	4.2	4.2	4.2	4.2	4.2	4.2	4.2	4.1	4.0	3.9	3.8	3.7
	29	SHC	4.7	4.7	4.7	4.7	4.7	4.7	4.7	4.7	4.7	4.7	4.6	4.5	4.4	4.3	4.3
	31	SHC	5.3	5.3	5.3	5.3	5.3	5.3	5.3	5.3	5.3	5.3	5.2	5.1	5.0	4.9	4.8

3. Cooling Capacity of Indoor Unit

3-14. Slim Low Static Ducted Type (M1 Type)

● S-15MM1E5

Power supply : 220/230/240V 1phase-50,60Hz TC : Total Cooling Capacity (kW) SHC : Sensible Heat Capacity (kW)

This data is when the indoor unit connects with 16HP outdoor unit.

RATING CAPACITY:		1.5 kW	AIR FLOW RATE: 8.0 m³/min														
EVAPORATOR			CONDENSER														
AIR INTAKE. TEMP			AMBIENT TEMP. (°C)														
W.B.	D.B.		15	17	19	21	23	25	27	29	31	33	35	37	39	41	43
14		TC	1.0	1.0	1.0	1.0	1.0	1.0	1.0	1.0	1.0	1.0	1.0	1.0	1.0	1.0	1.0
	21	SHC	1.0	1.0	1.0	1.0	1.0	1.0	1.0	1.0	1.0	1.0	1.0	1.0	1.0	1.0	1.0
	23	SHC	1.0	1.0	1.0	1.0	1.0	1.0	1.0	1.0	1.0	1.0	1.0	1.0	1.0	1.0	1.0
	25	SHC	1.0	1.0	1.0	1.0	1.0	1.0	1.0	1.0	1.0	1.0	1.0	1.0	1.0	1.0	1.0
	27	SHC	1.0	1.0	1.0	1.0	1.0	1.0	1.0	1.0	1.0	1.0	1.0	1.0	1.0	1.0	1.0
15		TC	1.1	1.1	1.1	1.1	1.1	1.1	1.1	1.1	1.1	1.1	1.1	1.1	1.1	1.1	1.1
	21	SHC	1.1	1.1	1.1	1.1	1.1	1.1	1.1	1.1	1.1	1.1	1.1	1.1	1.1	1.1	1.1
	23	SHC	1.1	1.1	1.1	1.1	1.1	1.1	1.1	1.1	1.1	1.1	1.1	1.1	1.1	1.1	1.1
	25	SHC	1.1	1.1	1.1	1.1	1.1	1.1	1.1	1.1	1.1	1.1	1.1	1.1	1.1	1.1	1.1
	27	SHC	1.1	1.1	1.1	1.1	1.1	1.1	1.1	1.1	1.1	1.1	1.1	1.1	1.1	1.1	1.1
16		TC	1.2	1.2	1.2	1.2	1.2	1.2	1.2	1.2	1.2	1.2	1.2	1.2	1.2	1.2	1.2
	21	SHC	1.1	1.1	1.1	1.1	1.1	1.1	1.1	1.1	1.1	1.1	1.1	1.1	1.1	1.1	1.1
	23	SHC	1.2	1.2	1.2	1.2	1.2	1.2	1.2	1.2	1.2	1.2	1.2	1.2	1.2	1.2	1.2
	25	SHC	1.2	1.2	1.2	1.2	1.2	1.2	1.2	1.2	1.2	1.2	1.2	1.2	1.2	1.2	1.2
	27	SHC	1.2	1.2	1.2	1.2	1.2	1.2	1.2	1.2	1.2	1.2	1.2	1.2	1.2	1.2	1.2
	29	SHC	1.2	1.2	1.2	1.2	1.2	1.2	1.2	1.2	1.2	1.2	1.2	1.2	1.2	1.2	1.2
17		TC	1.3	1.3	1.3	1.3	1.3	1.3	1.3	1.3	1.3	1.3	1.3	1.3	1.3	1.3	1.3
	21	SHC	1.1	1.1	1.1	1.1	1.1	1.1	1.1	1.1	1.1	1.1	1.1	1.1	1.1	1.1	1.1
	23	SHC	1.2	1.2	1.2	1.2	1.2	1.2	1.2	1.2	1.2	1.2	1.2	1.2	1.2	1.2	1.2
	25	SHC	1.3	1.3	1.3	1.3	1.3	1.3	1.3	1.3	1.3	1.3	1.3	1.3	1.3	1.3	1.3
	27	SHC	1.3	1.3	1.3	1.3	1.3	1.3	1.3	1.3	1.3	1.3	1.3	1.3	1.3	1.3	1.3
	29	SHC	1.3	1.3	1.3	1.3	1.3	1.3	1.3	1.3	1.3	1.3	1.3	1.3	1.3	1.3	1.3
18		TC	1.4	1.4	1.4	1.4	1.4	1.4	1.4	1.4	1.4	1.4	1.4	1.4	1.4	1.4	1.4
	21	SHC	1.0	1.0	1.0	1.0	1.0	1.0	1.0	1.0	1.0	1.0	1.0	1.0	1.0	1.0	1.0
	23	SHC	1.2	1.2	1.2	1.2	1.2	1.2	1.2	1.2	1.2	1.2	1.2	1.2	1.2	1.2	1.2
	25	SHC	1.4	1.4	1.4	1.4	1.4	1.4	1.4	1.4	1.4	1.4	1.4	1.4	1.4	1.4	1.4
	27	SHC	1.4	1.4	1.4	1.4	1.4	1.4	1.4	1.4	1.4	1.4	1.4	1.4	1.4	1.4	1.4
	29	SHC	1.4	1.4	1.4	1.4	1.4	1.4	1.4	1.4	1.4	1.4	1.4	1.4	1.4	1.4	1.4
	31	SHC	1.4	1.4	1.4	1.4	1.4	1.4	1.4	1.4	1.4	1.4	1.4	1.4	1.4	1.4	1.4
19		TC	1.5	1.5	1.5	1.5	1.5	1.5	1.5	1.5	1.5	1.5	1.5	1.5	1.5	1.5	1.5
	21	SHC	1.0	1.0	1.0	1.0	1.0	1.0	1.0	1.0	1.0	1.0	1.0	1.0	1.0	1.0	1.0
	23	SHC	1.1	1.1	1.1	1.1	1.1	1.1	1.1	1.1	1.1	1.1	1.1	1.1	1.1	1.1	1.1
	25	SHC	1.3	1.3	1.3	1.3	1.3	1.3	1.3	1.3	1.3	1.3	1.3	1.3	1.3	1.3	1.3
	27	SHC	1.5	1.5	1.5	1.5	1.5	1.5	1.5	1.5	1.5	1.5	1.5	1.5	1.5	1.5	1.5
	29	SHC	1.5	1.5	1.5	1.5	1.5	1.5	1.5	1.5	1.5	1.5	1.5	1.5	1.5	1.5	1.5
	31	SHC	1.5	1.5	1.5	1.5	1.5	1.5	1.5	1.5	1.5	1.5	1.5	1.5	1.5	1.5	1.5
20		TC	1.6	1.6	1.6	1.6	1.6	1.6	1.6	1.6	1.6	1.6	1.6	1.6	1.6	1.6	1.6
	23	SHC	1.1	1.1	1.1	1.1	1.1	1.1	1.1	1.1	1.1	1.1	1.1	1.1	1.1	1.1	1.1
	25	SHC	1.3	1.3	1.3	1.3	1.3	1.3	1.3	1.3	1.3	1.3	1.3	1.3	1.3	1.3	1.2
	27	SHC	1.4	1.4	1.4	1.4	1.4	1.4	1.4	1.4	1.4	1.4	1.4	1.4	1.4	1.4	1.4
	29	SHC	1.6	1.6	1.6	1.6	1.6	1.6	1.6	1.6	1.6	1.6	1.6	1.6	1.6	1.6	1.6
	31	SHC	1.6	1.6	1.6	1.6	1.6	1.6	1.6	1.6	1.6	1.6	1.6	1.6	1.6	1.6	1.6
21		TC	1.7	1.7	1.7	1.7	1.7	1.7	1.7	1.7	1.7	1.7	1.7	1.7	1.7	1.6	1.6
	23	SHC	1.0	1.0	1.0	1.0	1.0	1.0	1.0	1.0	1.0	1.0	1.0	1.0	1.0	1.0	1.0
	25	SHC	1.2	1.2	1.2	1.2	1.2	1.2	1.2	1.2	1.2	1.2	1.2	1.2	1.2	1.2	1.1
	27	SHC	1.4	1.4	1.4	1.4	1.4	1.4	1.4	1.4	1.4	1.4	1.4	1.4	1.3	1.3	1.3
	29	SHC	1.5	1.5	1.5	1.5	1.5	1.5	1.5	1.5	1.5	1.5	1.5	1.5	1.5	1.5	1.5
	31	SHC	1.7	1.7	1.7	1.7	1.7	1.7	1.7	1.7	1.7	1.7	1.7	1.7	1.7	1.6	1.6
22		TC	1.8	1.8	1.8	1.8	1.8	1.8	1.8	1.8	1.8	1.8	1.8	1.8	1.7	1.7	1.6
	25	SHC	1.1	1.1	1.1	1.1	1.1	1.1	1.1	1.1	1.1	1.1	1.1	1.1	1.1	1.1	1.0
	27	SHC	1.3	1.3	1.3	1.3	1.3	1.3	1.3	1.3	1.3	1.3	1.3	1.3	1.2	1.2	1.2
	29	SHC	1.5	1.5	1.5	1.5	1.5	1.5	1.5	1.5	1.5	1.5	1.5	1.4	1.4	1.4	1.4
	31	SHC	1.6	1.6	1.6	1.6	1.6	1.6	1.6	1.6	1.6	1.6	1.6	1.6	1.6	1.5	1.5
23		TC	1.9	1.9	1.9	1.9	1.9	1.9	1.9	1.9	1.9	1.9	1.8	1.8	1.7	1.7	1.7
	25	SHC	1.1	1.1	1.1	1.1	1.1	1.1	1.1	1.1	1.1	1.1	1.0	1.0	1.0	1.0	0.9
	27	SHC	1.2	1.2	1.2	1.2	1.2	1.2	1.2	1.2	1.2	1.2	1.2	1.2	1.1	1.1	1.1
	29	SHC	1.4	1.4	1.4	1.4	1.4	1.4	1.4	1.4	1.4	1.4	1.4	1.3	1.3	1.3	1.3
	31	SHC	1.6	1.6	1.6	1.6	1.6	1.6	1.6	1.6	1.6	1.6	1.5	1.5	1.5	1.4	1.4

3. Cooling Capacity of Indoor Unit

- S-22MM1E5

Power supply : 220/230/240V 1phase-50,60Hz TC : Total Cooling Capacity (kW) SHC : Sensible Heat Capacity (kW)
This data is when the indoor unit connects with 16HP outdoor unit.

RATING CAPACITY:		2.2 kW	AIR FLOW RATE: 8.0 m³/min														
EVAPORATOR			CONDENSER														
AIR INTAKE. TEMP			AMBIENT TEMP. (°C)														
W.B.	D.B.		15	17	19	21	23	25	27	29	31	33	35	37	39	41	43
14		TC	1.5	1.5	1.5	1.5	1.5	1.5	1.5	1.5	1.5	1.5	1.5	1.5	1.5	1.5	1.5
	21	SHC	1.5	1.5	1.5	1.5	1.5	1.5	1.5	1.5	1.5	1.5	1.5	1.5	1.5	1.5	1.5
	23	SHC	1.5	1.5	1.5	1.5	1.5	1.5	1.5	1.5	1.5	1.5	1.5	1.5	1.5	1.5	1.5
	25	SHC	1.5	1.5	1.5	1.5	1.5	1.5	1.5	1.5	1.5	1.5	1.5	1.5	1.5	1.5	1.5
	27	SHC	1.5	1.5	1.5	1.5	1.5	1.5	1.5	1.5	1.5	1.5	1.5	1.5	1.5	1.5	1.5
15		TC	1.6	1.6	1.6	1.6	1.6	1.6	1.6	1.6	1.6	1.6	1.6	1.6	1.6	1.6	1.6
	21	SHC	1.6	1.6	1.6	1.6	1.6	1.6	1.6	1.6	1.6	1.6	1.6	1.6	1.6	1.6	1.6
	23	SHC	1.6	1.6	1.6	1.6	1.6	1.6	1.6	1.6	1.6	1.6	1.6	1.6	1.6	1.6	1.6
	25	SHC	1.6	1.6	1.6	1.6	1.6	1.6	1.6	1.6	1.6	1.6	1.6	1.6	1.6	1.6	1.6
	27	SHC	1.6	1.6	1.6	1.6	1.6	1.6	1.6	1.6	1.6	1.6	1.6	1.6	1.6	1.6	1.6
16		TC	1.8	1.8	1.8	1.8	1.8	1.8	1.8	1.8	1.8	1.8	1.8	1.8	1.8	1.8	1.8
	21	SHC	1.4	1.4	1.4	1.4	1.4	1.4	1.4	1.4	1.4	1.4	1.4	1.4	1.4	1.4	1.4
	23	SHC	1.8	1.8	1.8	1.8	1.8	1.8	1.8	1.8	1.8	1.8	1.8	1.8	1.8	1.8	1.8
	25	SHC	1.8	1.8	1.8	1.8	1.8	1.8	1.8	1.8	1.8	1.8	1.8	1.8	1.8	1.8	1.8
	27	SHC	1.8	1.8	1.8	1.8	1.8	1.8	1.8	1.8	1.8	1.8	1.8	1.8	1.8	1.8	1.8
	29	SHC	1.8	1.8	1.8	1.8	1.8	1.8	1.8	1.8	1.8	1.8	1.8	1.8	1.8	1.8	1.8
17		TC	1.9	1.9	1.9	1.9	1.9	1.9	1.9	1.9	1.9	1.9	1.9	1.9	1.9	1.9	1.9
	21	SHC	1.3	1.3	1.3	1.3	1.3	1.3	1.3	1.3	1.3	1.3	1.3	1.3	1.3	1.3	1.3
	23	SHC	1.6	1.6	1.6	1.6	1.6	1.6	1.6	1.6	1.6	1.6	1.6	1.6	1.6	1.6	1.6
	25	SHC	1.9	1.9	1.9	1.9	1.9	1.9	1.9	1.9	1.9	1.9	1.9	1.9	1.9	1.9	1.9
	27	SHC	1.9	1.9	1.9	1.9	1.9	1.9	1.9	1.9	1.9	1.9	1.9	1.9	1.9	1.9	1.9
	29	SHC	1.9	1.9	1.9	1.9	1.9	1.9	1.9	1.9	1.9	1.9	1.9	1.9	1.9	1.9	1.9
18		TC	2.1	2.1	2.1	2.1	2.1	2.1	2.1	2.1	2.1	2.1	2.1	2.1	2.1	2.1	2.1
	21	SHC	1.2	1.2	1.2	1.2	1.2	1.2	1.2	1.2	1.2	1.2	1.2	1.2	1.2	1.2	1.2
	23	SHC	1.5	1.5	1.5	1.5	1.5	1.5	1.5	1.5	1.5	1.5	1.5	1.5	1.5	1.5	1.5
	25	SHC	1.8	1.8	1.8	1.8	1.8	1.8	1.8	1.8	1.8	1.8	1.8	1.8	1.8	1.8	1.8
	27	SHC	2.1	2.1	2.1	2.1	2.1	2.1	2.1	2.1	2.1	2.1	2.1	2.1	2.1	2.1	2.1
	29	SHC	2.1	2.1	2.1	2.1	2.1	2.1	2.1	2.1	2.1	2.1	2.1	2.1	2.1	2.1	2.1
	31	SHC	2.1	2.1	2.1	2.1	2.1	2.1	2.1	2.1	2.1	2.1	2.1	2.1	2.1	2.1	2.1
19		TC	2.2	2.2	2.2	2.2	2.2	2.2	2.2	2.2	2.2	2.2	2.2	2.2	2.2	2.2	2.2
	21	SHC	1.1	1.1	1.1	1.1	1.1	1.1	1.1	1.1	1.1	1.1	1.1	1.1	1.1	1.1	1.1
	23	SHC	1.4	1.4	1.4	1.4	1.4	1.4	1.4	1.4	1.4	1.4	1.4	1.4	1.4	1.4	1.4
	25	SHC	1.7	1.7	1.7	1.7	1.7	1.7	1.7	1.7	1.7	1.7	1.7	1.7	1.7	1.7	1.7
	27	SHC	2.0	2.0	2.0	2.0	2.0	2.0	2.0	2.0	2.0	2.0	2.0	2.0	2.0	2.0	2.0
	29	SHC	2.2	2.2	2.2	2.2	2.2	2.2	2.2	2.2	2.2	2.2	2.2	2.2	2.2	2.2	2.2
	31	SHC	2.2	2.2	2.2	2.2	2.2	2.2	2.2	2.2	2.2	2.2	2.2	2.2	2.2	2.2	2.2
20		TC	2.3	2.3	2.3	2.3	2.3	2.3	2.3	2.3	2.3	2.3	2.3	2.3	2.3	2.3	2.3
	23	SHC	1.3	1.3	1.3	1.3	1.3	1.3	1.3	1.3	1.3	1.3	1.3	1.3	1.3	1.2	1.2
	25	SHC	1.6	1.6	1.6	1.6	1.6	1.6	1.6	1.6	1.6	1.6	1.6	1.6	1.6	1.6	1.5
	27	SHC	1.9	1.9	1.9	1.9	1.9	1.9	1.9	1.9	1.9	1.9	1.9	1.9	1.9	1.9	1.8
	29	SHC	2.2	2.2	2.2	2.2	2.2	2.2	2.2	2.2	2.2	2.2	2.2	2.2	2.2	2.2	2.2
	31	SHC	2.3	2.3	2.3	2.3	2.3	2.3	2.3	2.3	2.3	2.3	2.3	2.3	2.3	2.3	2.3
21		TC	2.5	2.5	2.5	2.5	2.5	2.5	2.5	2.5	2.5	2.5	2.5	2.5	2.5	2.4	2.3
	23	SHC	1.1	1.1	1.1	1.1	1.1	1.1	1.1	1.1	1.1	1.1	1.1	1.1	1.1	1.1	1.1
	25	SHC	1.4	1.4	1.4	1.4	1.4	1.4	1.4	1.4	1.4	1.4	1.4	1.4	1.4	1.4	1.4
	27	SHC	1.7	1.7	1.7	1.7	1.7	1.7	1.7	1.7	1.7	1.7	1.7	1.7	1.7	1.7	1.7
	29	SHC	2.0	2.0	2.0	2.0	2.0	2.0	2.0	2.0	2.0	2.0	2.0	2.0	2.0	2.0	2.0
	31	SHC	2.3	2.3	2.3	2.3	2.3	2.3	2.3	2.3	2.3	2.3	2.3	2.3	2.3	2.3	2.3
22		TC	2.6	2.6	2.6	2.6	2.6	2.6	2.6	2.6	2.6	2.6	2.6	2.6	2.5	2.4	2.4
	25	SHC	1.3	1.3	1.3	1.3	1.3	1.3	1.3	1.3	1.3	1.3	1.3	1.3	1.2	1.2	1.2
	27	SHC	1.6	1.6	1.6	1.6	1.6	1.6	1.6	1.6	1.6	1.6	1.6	1.6	1.5	1.5	1.5
	29	SHC	1.9	1.9	1.9	1.9	1.9	1.9	1.9	1.9	1.9	1.9	1.9	1.9	1.9	1.8	1.8
	31	SHC	2.2	2.2	2.2	2.2	2.2	2.2	2.2	2.2	2.2	2.2	2.2	2.2	2.2	2.1	2.1
23		TC	2.8	2.8	2.8	2.8	2.8	2.8	2.8	2.8	2.8	2.8	2.7	2.6	2.6	2.5	2.4
	25	SHC	1.1	1.1	1.1	1.1	1.1	1.1	1.1	1.1	1.1	1.1	1.1	1.1	1.1	1.0	1.0
	27	SHC	1.5	1.5	1.5	1.5	1.5	1.5	1.5	1.5	1.5	1.5	1.4	1.4	1.4	1.4	1.3
	29	SHC	1.8	1.8	1.8	1.8	1.8	1.8	1.8	1.8	1.8	1.8	1.7	1.7	1.7	1.7	1.7
	31	SHC	2.1	2.1	2.1	2.1	2.1	2.1	2.1	2.1	2.1	2.1	2.0	2.0	2.0	2.0	2.0

3. Cooling Capacity of Indoor Unit

- S-28MM1E5

Power supply : 220/230/240V 1phase-50,60Hz TC : Total Cooling Capacity (kW) SHC : Sensible Heat Capacity (kW)
This data is when the indoor unit connects with 16HP outdoor unit.

RATING CAPACITY:		2.8 kW	AIR FLOW RATE: 8.5 m³/min														
EVAPORATOR			CONDENSER														
AIR INTAKE. TEMP			AMBIENT TEMP. (°C)														
W.B.	D.B.		15	17	19	21	23	25	27	29	31	33	35	37	39	41	43
14		TC	1.9	1.9	1.9	1.9	1.9	1.9	1.9	1.9	1.9	1.9	1.9	1.9	1.9	1.9	1.9
	21	SHC	1.9	1.9	1.9	1.9	1.9	1.9	1.9	1.9	1.9	1.9	1.9	1.9	1.9	1.9	1.9
	23	SHC	1.9	1.9	1.9	1.9	1.9	1.9	1.9	1.9	1.9	1.9	1.9	1.9	1.9	1.9	1.9
	25	SHC	1.9	1.9	1.9	1.9	1.9	1.9	1.9	1.9	1.9	1.9	1.9	1.9	1.9	1.9	1.9
	27	SHC	1.9	1.9	1.9	1.9	1.9	1.9	1.9	1.9	1.9	1.9	1.9	1.9	1.9	1.9	1.9
15		TC	2.1	2.1	2.1	2.1	2.1	2.1	2.1	2.1	2.1	2.1	2.1	2.1	2.1	2.1	2.1
	21	SHC	1.8	1.8	1.8	1.8	1.8	1.8	1.8	1.8	1.8	1.8	1.8	1.8	1.8	1.8	1.8
	23	SHC	2.1	2.1	2.1	2.1	2.1	2.1	2.1	2.1	2.1	2.1	2.1	2.1	2.1	2.1	2.1
	25	SHC	2.1	2.1	2.1	2.1	2.1	2.1	2.1	2.1	2.1	2.1	2.1	2.1	2.1	2.1	2.1
	27	SHC	2.1	2.1	2.1	2.1	2.1	2.1	2.1	2.1	2.1	2.1	2.1	2.1	2.1	2.1	2.1
16		TC	2.2	2.2	2.2	2.2	2.2	2.2	2.2	2.2	2.2	2.2	2.2	2.2	2.2	2.2	2.2
	21	SHC	1.7	1.7	1.7	1.7	1.7	1.7	1.7	1.7	1.7	1.7	1.7	1.7	1.7	1.7	1.7
	23	SHC	2.0	2.0	2.0	2.0	2.0	2.0	2.0	2.0	2.0	2.0	2.0	2.0	2.0	2.0	2.0
	25	SHC	2.2	2.2	2.2	2.2	2.2	2.2	2.2	2.2	2.2	2.2	2.2	2.2	2.2	2.2	2.2
	27	SHC	2.2	2.2	2.2	2.2	2.2	2.2	2.2	2.2	2.2	2.2	2.2	2.2	2.2	2.2	2.2
	29	SHC	2.2	2.2	2.2	2.2	2.2	2.2	2.2	2.2	2.2	2.2	2.2	2.2	2.2	2.2	2.2
17		TC	2.4	2.4	2.4	2.4	2.4	2.4	2.4	2.4	2.4	2.4	2.4	2.4	2.4	2.4	2.4
	21	SHC	1.6	1.6	1.6	1.6	1.6	1.6	1.6	1.6	1.6	1.6	1.6	1.6	1.6	1.6	1.6
	23	SHC	1.9	1.9	1.9	1.9	1.9	1.9	1.9	1.9	1.9	1.9	1.9	1.9	1.9	1.9	1.9
	25	SHC	2.2	2.2	2.2	2.2	2.2	2.2	2.2	2.2	2.2	2.2	2.2	2.2	2.2	2.2	2.2
	27	SHC	2.4	2.4	2.4	2.4	2.4	2.4	2.4	2.4	2.4	2.4	2.4	2.4	2.4	2.4	2.4
	29	SHC	2.4	2.4	2.4	2.4	2.4	2.4	2.4	2.4	2.4	2.4	2.4	2.4	2.4	2.4	2.4
18		TC	2.6	2.6	2.6	2.6	2.6	2.6	2.6	2.6	2.6	2.6	2.6	2.6	2.6	2.6	2.6
	21	SHC	1.5	1.5	1.5	1.5	1.5	1.5	1.5	1.5	1.5	1.5	1.5	1.5	1.5	1.5	1.5
	23	SHC	1.8	1.8	1.8	1.8	1.8	1.8	1.8	1.8	1.8	1.8	1.8	1.8	1.8	1.8	1.8
	25	SHC	2.1	2.1	2.1	2.1	2.1	2.1	2.1	2.1	2.1	2.1	2.1	2.1	2.1	2.1	2.1
	27	SHC	2.5	2.5	2.5	2.5	2.5	2.5	2.5	2.5	2.5	2.5	2.5	2.5	2.5	2.5	2.5
	29	SHC	2.6	2.6	2.6	2.6	2.6	2.6	2.6	2.6	2.6	2.6	2.6	2.6	2.6	2.6	2.6
	31	SHC	2.6	2.6	2.6	2.6	2.6	2.6	2.6	2.6	2.6	2.6	2.6	2.6	2.6	2.6	2.6
19		TC	2.8	2.8	2.8	2.8	2.8	2.8	2.8	2.8	2.8	2.8	2.8	2.8	2.8	2.8	2.8
	21	SHC	1.3	1.3	1.3	1.3	1.3	1.3	1.3	1.3	1.3	1.3	1.3	1.3	1.3	1.3	1.3
	23	SHC	1.7	1.7	1.7	1.7	1.7	1.7	1.7	1.7	1.7	1.7	1.7	1.7	1.7	1.7	1.7
	25	SHC	2.0	2.0	2.0	2.0	2.0	2.0	2.0	2.0	2.0	2.0	2.0	2.0	2.0	2.0	2.0
	27	SHC	2.3	2.3	2.3	2.3	2.3	2.3	2.3	2.3	2.3	2.3	2.3	2.3	2.3	2.3	2.3
	29	SHC	2.7	2.7	2.7	2.7	2.7	2.7	2.7	2.7	2.7	2.7	2.7	2.7	2.7	2.7	2.7
	31	SHC	2.8	2.8	2.8	2.8	2.8	2.8	2.8	2.8	2.8	2.8	2.8	2.8	2.8	2.8	2.8
20		TC	3.0	3.0	3.0	3.0	3.0	3.0	3.0	3.0	3.0	3.0	3.0	3.0	3.0	3.0	2.9
	23	SHC	1.5	1.5	1.5	1.5	1.5	1.5	1.5	1.5	1.5	1.5	1.5	1.5	1.5	1.5	1.5
	25	SHC	1.9	1.9	1.9	1.9	1.9	1.9	1.9	1.9	1.9	1.9	1.9	1.9	1.9	1.8	1.8
	27	SHC	2.2	2.2	2.2	2.2	2.2	2.2	2.2	2.2	2.2	2.2	2.2	2.2	2.2	2.2	2.2
	29	SHC	2.5	2.5	2.5	2.5	2.5	2.5	2.5	2.5	2.5	2.5	2.5	2.5	2.5	2.5	2.5
	31	SHC	2.8	2.8	2.8	2.8	2.8	2.8	2.8	2.8	2.8	2.8	2.8	2.8	2.8	2.8	2.8
21		TC	3.2	3.2	3.2	3.2	3.2	3.2	3.2	3.2	3.2	3.2	3.2	3.2	3.1	3.0	3.0
	23	SHC	1.4	1.4	1.4	1.4	1.4	1.4	1.4	1.4	1.4	1.4	1.4	1.4	1.4	1.3	1.3
	25	SHC	1.7	1.7	1.7	1.7	1.7	1.7	1.7	1.7	1.7	1.7	1.7	1.7	1.7	1.7	1.6
	27	SHC	2.0	2.0	2.0	2.0	2.0	2.0	2.0	2.0	2.0	2.0	2.0	2.0	2.0	2.0	2.0
	29	SHC	2.4	2.4	2.4	2.4	2.4	2.4	2.4	2.4	2.4	2.4	2.4	2.4	2.4	2.3	2.3
	31	SHC	2.7	2.7	2.7	2.7	2.7	2.7	2.7	2.7	2.7	2.7	2.7	2.7	2.7	2.7	2.6
22		TC	3.4	3.4	3.4	3.4	3.4	3.4	3.4	3.4	3.4	3.4	3.4	3.3	3.2	3.1	3.1
	25	SHC	1.6	1.6	1.6	1.6	1.6	1.6	1.6	1.6	1.6	1.6	1.6	1.5	1.5	1.5	1.5
	27	SHC	1.9	1.9	1.9	1.9	1.9	1.9	1.9	1.9	1.9	1.9	1.9	1.9	1.8	1.8	1.8
	29	SHC	2.2	2.2	2.2	2.2	2.2	2.2	2.2	2.2	2.2	2.2	2.2	2.2	2.2	2.1	2.1
	31	SHC	2.6	2.6	2.6	2.6	2.6	2.6	2.6	2.6	2.6	2.6	2.6	2.5	2.5	2.5	2.5
23		TC	3.5	3.5	3.5	3.5	3.5	3.5	3.5	3.5	3.5	3.5	3.4	3.3	3.3	3.2	3.1
	25	SHC	1.4	1.4	1.4	1.4	1.4	1.4	1.4	1.4	1.4	1.4	1.4	1.4	1.3	1.3	1.3
	27	SHC	1.8	1.8	1.8	1.8	1.8	1.8	1.8	1.8	1.8	1.8	1.7	1.7	1.7	1.6	1.6
	29	SHC	2.1	2.1	2.1	2.1	2.1	2.1	2.1	2.1	2.1	2.1	2.1	2.0	2.0	2.0	1.9
	31	SHC	2.4	2.4	2.4	2.4	2.4	2.4	2.4	2.4	2.4	2.4	2.4	2.4	2.3	2.3	2.3

3. Cooling Capacity of Indoor Unit

• S-36MM1E5

Power supply : 220/230/240V 1phase-50,60Hz TC : Total Cooling Capacity (kW) SHC : Sensible Heat Capacity (kW)

This data is when the indoor unit connects with 16HP outdoor unit.

RATING CAPACITY:		3.6 kW	AIR FLOW RATE: 9.0 m³/min														
EVAPORATOR			CONDENSER														
AIR INTAKE. TEMP			AMBIENT TEMP. (°C)														
W.B.	D.B.		15	17	19	21	23	25	27	29	31	33	35	37	39	41	43
14		TC	2.4	2.4	2.4	2.4	2.4	2.4	2.4	2.4	2.4	2.4	2.4	2.4	2.4	2.4	2.4
	21	SHC	2.3	2.3	2.3	2.3	2.3	2.3	2.3	2.3	2.3	2.3	2.3	2.3	2.3	2.3	2.3
	23	SHC	2.4	2.4	2.4	2.4	2.4	2.4	2.4	2.4	2.4	2.4	2.4	2.4	2.4	2.4	2.4
	25	SHC	2.4	2.4	2.4	2.4	2.4	2.4	2.4	2.4	2.4	2.4	2.4	2.4	2.4	2.4	2.4
	27	SHC	2.4	2.4	2.4	2.4	2.4	2.4	2.4	2.4	2.4	2.4	2.4	2.4	2.4	2.4	2.4
15		TC	2.6	2.6	2.6	2.6	2.6	2.6	2.6	2.6	2.6	2.6	2.6	2.6	2.6	2.6	2.6
	21	SHC	2.2	2.2	2.2	2.2	2.2	2.2	2.2	2.2	2.2	2.2	2.2	2.2	2.2	2.2	2.2
	23	SHC	2.5	2.5	2.5	2.5	2.5	2.5	2.5	2.5	2.5	2.5	2.5	2.5	2.5	2.5	2.5
	25	SHC	2.6	2.6	2.6	2.6	2.6	2.6	2.6	2.6	2.6	2.6	2.6	2.6	2.6	2.6	2.6
	27	SHC	2.6	2.6	2.6	2.6	2.6	2.6	2.6	2.6	2.6	2.6	2.6	2.6	2.6	2.6	2.6
16		TC	2.9	2.9	2.9	2.9	2.9	2.9	2.9	2.9	2.9	2.9	2.9	2.9	2.9	2.9	2.9
	21	SHC	2.1	2.1	2.1	2.1	2.1	2.1	2.1	2.1	2.1	2.1	2.1	2.1	2.1	2.1	2.1
	23	SHC	2.4	2.4	2.4	2.4	2.4	2.4	2.4	2.4	2.4	2.4	2.4	2.4	2.4	2.4	2.4
	25	SHC	2.8	2.8	2.8	2.8	2.8	2.8	2.8	2.8	2.8	2.8	2.8	2.8	2.8	2.8	2.8
	27	SHC	2.9	2.9	2.9	2.9	2.9	2.9	2.9	2.9	2.9	2.9	2.9	2.9	2.9	2.9	2.9
	29	SHC	2.9	2.9	2.9	2.9	2.9	2.9	2.9	2.9	2.9	2.9	2.9	2.9	2.9	2.9	2.9
17		TC	3.1	3.1	3.1	3.1	3.1	3.1	3.1	3.1	3.1	3.1	3.1	3.1	3.1	3.1	3.1
	21	SHC	1.9	1.9	1.9	1.9	1.9	1.9	1.9	1.9	1.9	1.9	1.9	1.9	1.9	1.9	1.9
	23	SHC	2.3	2.3	2.3	2.3	2.3	2.3	2.3	2.3	2.3	2.3	2.3	2.3	2.3	2.3	2.3
	25	SHC	2.7	2.7	2.7	2.7	2.7	2.7	2.7	2.7	2.7	2.7	2.7	2.7	2.7	2.7	2.7
	27	SHC	3.0	3.0	3.0	3.0	3.0	3.0	3.0	3.0	3.0	3.0	3.0	3.0	3.0	3.0	3.0
	29	SHC	3.1	3.1	3.1	3.1	3.1	3.1	3.1	3.1	3.1	3.1	3.1	3.1	3.1	3.1	3.1
18		TC	3.4	3.4	3.4	3.4	3.4	3.4	3.4	3.4	3.4	3.4	3.4	3.4	3.4	3.4	3.4
	21	SHC	1.8	1.8	1.8	1.8	1.8	1.8	1.8	1.8	1.8	1.8	1.8	1.8	1.8	1.8	1.8
	23	SHC	2.2	2.2	2.2	2.2	2.2	2.2	2.2	2.2	2.2	2.2	2.2	2.2	2.2	2.2	2.2
	25	SHC	2.5	2.5	2.5	2.5	2.5	2.5	2.5	2.5	2.5	2.5	2.5	2.5	2.5	2.5	2.5
	27	SHC	2.9	2.9	2.9	2.9	2.9	2.9	2.9	2.9	2.9	2.9	2.9	2.9	2.9	2.9	2.9
	29	SHC	3.3	3.3	3.3	3.3	3.3	3.3	3.3	3.3	3.3	3.3	3.3	3.3	3.3	3.3	3.3
	31	SHC	3.4	3.4	3.4	3.4	3.4	3.4	3.4	3.4	3.4	3.4	3.4	3.4	3.4	3.4	3.4
19		TC	3.6	3.6	3.6	3.6	3.6	3.6	3.6	3.6	3.6	3.6	3.6	3.6	3.6	3.6	3.6
	21	SHC	1.7	1.7	1.7	1.7	1.7	1.7	1.7	1.7	1.7	1.7	1.7	1.7	1.7	1.7	1.7
	23	SHC	2.0	2.0	2.0	2.0	2.0	2.0	2.0	2.0	2.0	2.0	2.0	2.0	2.0	2.0	2.0
	25	SHC	2.4	2.4	2.4	2.4	2.4	2.4	2.4	2.4	2.4	2.4	2.4	2.4	2.4	2.4	2.4
	27	SHC	2.8	2.8	2.8	2.8	2.8	2.8	2.8	2.8	2.8	2.8	2.8	2.8	2.8	2.8	2.8
	29	SHC	3.1	3.1	3.1	3.1	3.1	3.1	3.1	3.1	3.1	3.1	3.1	3.1	3.1	3.1	3.1
	31	SHC	3.5	3.5	3.5	3.5	3.5	3.5	3.5	3.5	3.5	3.5	3.5	3.5	3.5	3.5	3.5
20		TC	3.8	3.8	3.8	3.8	3.8	3.8	3.8	3.8	3.8	3.8	3.8	3.8	3.8	3.8	3.8
	23	SHC	1.9	1.9	1.9	1.9	1.9	1.9	1.9	1.9	1.9	1.9	1.9	1.9	1.9	1.9	1.9
	25	SHC	2.3	2.3	2.3	2.3	2.3	2.3	2.3	2.3	2.3	2.3	2.3	2.3	2.3	2.2	2.2
	27	SHC	2.6	2.6	2.6	2.6	2.6	2.6	2.6	2.6	2.6	2.6	2.6	2.6	2.6	2.6	2.6
	29	SHC	3.0	3.0	3.0	3.0	3.0	3.0	3.0	3.0	3.0	3.0	3.0	3.0	3.0	3.0	3.0
	31	SHC	3.4	3.4	3.4	3.4	3.4	3.4	3.4	3.4	3.4	3.4	3.4	3.4	3.4	3.3	3.3
21		TC	4.1	4.1	4.1	4.1	4.1	4.1	4.1	4.1	4.1	4.1	4.1	4.1	4.0	3.9	3.8
	23	SHC	1.7	1.7	1.7	1.7	1.7	1.7	1.7	1.7	1.7	1.7	1.7	1.7	1.7	1.7	1.6
	25	SHC	2.1	2.1	2.1	2.1	2.1	2.1	2.1	2.1	2.1	2.1	2.1	2.1	2.1	2.0	2.0
	27	SHC	2.5	2.5	2.5	2.5	2.5	2.5	2.5	2.5	2.5	2.5	2.5	2.5	2.4	2.4	2.4
	29	SHC	2.8	2.8	2.8	2.8	2.8	2.8	2.8	2.8	2.8	2.8	2.8	2.8	2.8	2.8	2.8
	31	SHC	3.2	3.2	3.2	3.2	3.2	3.2	3.2	3.2	3.2	3.2	3.2	3.2	3.2	3.1	3.1
22		TC	4.3	4.3	4.3	4.3	4.3	4.3	4.3	4.3	4.3	4.3	4.3	4.2	4.1	4.0	3.9
	25	SHC	2.0	2.0	2.0	2.0	2.0	2.0	2.0	2.0	2.0	2.0	2.0	1.9	1.9	1.8	1.8
	27	SHC	2.3	2.3	2.3	2.3	2.3	2.3	2.3	2.3	2.3	2.3	2.3	2.3	2.2	2.2	2.2
	29	SHC	2.7	2.7	2.7	2.7	2.7	2.7	2.7	2.7	2.7	2.7	2.7	2.6	2.6	2.6	2.5
	31	SHC	3.1	3.1	3.1	3.1	3.1	3.1	3.1	3.1	3.1	3.1	3.1	3.0	3.0	2.9	2.9
23		TC	4.6	4.6	4.6	4.6	4.6	4.6	4.6	4.6	4.6	4.6	4.4	4.3	4.2	4.1	4.0
	25	SHC	1.8	1.8	1.8	1.8	1.8	1.8	1.8	1.8	1.8	1.8	1.7	1.7	1.7	1.6	1.6
	27	SHC	2.2	2.2	2.2	2.2	2.2	2.2	2.2	2.2	2.2	2.2	2.1	2.1	2.0	2.0	2.0
	29	SHC	2.5	2.5	2.5	2.5	2.5	2.5	2.5	2.5	2.5	2.5	2.5	2.4	2.4	2.4	2.3
	31	SHC	2.9	2.9	2.9	2.9	2.9	2.9	2.9	2.9	2.9	2.9	2.9	2.8	2.8	2.7	2.7

3. Cooling Capacity of Indoor Unit

- S-45MM1E5

Power supply : 220/230/240V 1phase-50,60Hz TC : Total Cooling Capacity (kW) SHC : Sensible Heat Capacity (kW)
This data is when the indoor unit connects with 16HP outdoor unit.

RATING CAPACITY:		4.5 kW	AIR FLOW RATE: 10.5 m³/min														
EVAPORATOR			CONDENSER														
AIR INTAKE. TEMP			AMBIENT TEMP. (°C)														
W.B.	D.B.		15	17	19	21	23	25	27	29	31	33	35	37	39	41	43
14		TC	3.0	3.0	3.0	3.0	3.0	3.0	3.0	3.0	3.0	3.0	3.0	3.0	3.0	3.0	3.0
	21	SHC	2.7	2.7	2.7	2.7	2.7	2.7	2.7	2.7	2.7	2.7	2.7	2.7	2.7	2.7	2.7
	23	SHC	3.0	3.0	3.0	3.0	3.0	3.0	3.0	3.0	3.0	3.0	3.0	3.0	3.0	3.0	3.0
	25	SHC	3.0	3.0	3.0	3.0	3.0	3.0	3.0	3.0	3.0	3.0	3.0	3.0	3.0	3.0	3.0
	27	SHC	3.0	3.0	3.0	3.0	3.0	3.0	3.0	3.0	3.0	3.0	3.0	3.0	3.0	3.0	3.0
15		TC	3.3	3.3	3.3	3.3	3.3	3.3	3.3	3.3	3.3	3.3	3.3	3.3	3.3	3.3	3.3
	21	SHC	2.6	2.6	2.6	2.6	2.6	2.6	2.6	2.6	2.6	2.6	2.6	2.6	2.6	2.6	2.6
	23	SHC	3.0	3.0	3.0	3.0	3.0	3.0	3.0	3.0	3.0	3.0	3.0	3.0	3.0	3.0	3.0
	25	SHC	3.3	3.3	3.3	3.3	3.3	3.3	3.3	3.3	3.3	3.3	3.3	3.3	3.3	3.3	3.3
	27	SHC	3.3	3.3	3.3	3.3	3.3	3.3	3.3	3.3	3.3	3.3	3.3	3.3	3.3	3.3	3.3
16		TC	3.6	3.6	3.6	3.6	3.6	3.6	3.6	3.6	3.6	3.6	3.6	3.6	3.6	3.6	3.6
	21	SHC	2.5	2.5	2.5	2.5	2.5	2.5	2.5	2.5	2.5	2.5	2.5	2.5	2.5	2.5	2.5
	23	SHC	2.9	2.9	2.9	2.9	2.9	2.9	2.9	2.9	2.9	2.9	2.9	2.9	2.9	2.9	2.9
	25	SHC	3.3	3.3	3.3	3.3	3.3	3.3	3.3	3.3	3.3	3.3	3.3	3.3	3.3	3.3	3.3
	27	SHC	3.6	3.6	3.6	3.6	3.6	3.6	3.6	3.6	3.6	3.6	3.6	3.6	3.6	3.6	3.6
	29	SHC	3.6	3.6	3.6	3.6	3.6	3.6	3.6	3.6	3.6	3.6	3.6	3.6	3.6	3.6	3.6
17		TC	3.9	3.9	3.9	3.9	3.9	3.9	3.9	3.9	3.9	3.9	3.9	3.9	3.9	3.9	3.9
	21	SHC	2.3	2.3	2.3	2.3	2.3	2.3	2.3	2.3	2.3	2.3	2.3	2.3	2.3	2.3	2.3
	23	SHC	2.8	2.8	2.8	2.8	2.8	2.8	2.8	2.8	2.8	2.8	2.8	2.8	2.8	2.8	2.8
	25	SHC	3.2	3.2	3.2	3.2	3.2	3.2	3.2	3.2	3.2	3.2	3.2	3.2	3.2	3.2	3.2
	27	SHC	3.6	3.6	3.6	3.6	3.6	3.6	3.6	3.6	3.6	3.6	3.6	3.6	3.6	3.6	3.6
	29	SHC	3.9	3.9	3.9	3.9	3.9	3.9	3.9	3.9	3.9	3.9	3.9	3.9	3.9	3.9	3.9
18		TC	4.2	4.2	4.2	4.2	4.2	4.2	4.2	4.2	4.2	4.2	4.2	4.2	4.2	4.2	4.2
	21	SHC	2.2	2.2	2.2	2.2	2.2	2.2	2.2	2.2	2.2	2.2	2.2	2.2	2.2	2.2	2.2
	23	SHC	2.6	2.6	2.6	2.6	2.6	2.6	2.6	2.6	2.6	2.6	2.6	2.6	2.6	2.6	2.6
	25	SHC	3.0	3.0	3.0	3.0	3.0	3.0	3.0	3.0	3.0	3.0	3.0	3.0	3.0	3.0	3.0
	27	SHC	3.4	3.4	3.4	3.4	3.4	3.4	3.4	3.4	3.4	3.4	3.4	3.4	3.4	3.4	3.4
	29	SHC	3.9	3.9	3.9	3.9	3.9	3.9	3.9	3.9	3.9	3.9	3.9	3.9	3.9	3.9	3.9
	31	SHC	4.2	4.2	4.2	4.2	4.2	4.2	4.2	4.2	4.2	4.2	4.2	4.2	4.2	4.2	4.2
19		TC	4.5	4.5	4.5	4.5	4.5	4.5	4.5	4.5	4.5	4.5	4.5	4.5	4.5	4.5	4.5
	21	SHC	2.1	2.1	2.1	2.1	2.1	2.1	2.1	2.1	2.1	2.1	2.1	2.1	2.1	2.1	2.1
	23	SHC	2.5	2.5	2.5	2.5	2.5	2.5	2.5	2.5	2.5	2.5	2.5	2.5	2.5	2.5	2.5
	25	SHC	2.9	2.9	2.9	2.9	2.9	2.9	2.9	2.9	2.9	2.9	2.9	2.9	2.9	2.9	2.9
	27	SHC	3.3	3.3	3.3	3.3	3.3	3.3	3.3	3.3	3.3	3.3	3.3	3.3	3.3	3.3	3.3
	29	SHC	3.7	3.7	3.7	3.7	3.7	3.7	3.7	3.7	3.7	3.7	3.7	3.7	3.7	3.7	3.7
	31	SHC	4.1	4.1	4.1	4.1	4.1	4.1	4.1	4.1	4.1	4.1	4.1	4.1	4.1	4.1	4.1
20		TC	4.8	4.8	4.8	4.8	4.8	4.8	4.8	4.8	4.8	4.8	4.8	4.8	4.8	4.8	4.7
	23	SHC	2.3	2.3	2.3	2.3	2.3	2.3	2.3	2.3	2.3	2.3	2.3	2.3	2.3	2.3	2.3
	25	SHC	2.7	2.7	2.7	2.7	2.7	2.7	2.7	2.7	2.7	2.7	2.7	2.7	2.7	2.7	2.7
	27	SHC	3.2	3.2	3.2	3.2	3.2	3.2	3.2	3.2	3.2	3.2	3.2	3.2	3.2	3.1	3.1
	29	SHC	3.6	3.6	3.6	3.6	3.6	3.6	3.6	3.6	3.6	3.6	3.6	3.6	3.6	3.6	3.5
	31	SHC	4.0	4.0	4.0	4.0	4.0	4.0	4.0	4.0	4.0	4.0	4.0	4.0	4.0	4.0	3.9
21		TC	5.1	5.1	5.1	5.1	5.1	5.1	5.1	5.1	5.1	5.1	5.1	5.1	5.0	4.9	4.8
	23	SHC	2.2	2.2	2.2	2.2	2.2	2.2	2.2	2.2	2.2	2.2	2.2	2.2	2.1	2.1	2.0
	25	SHC	2.6	2.6	2.6	2.6	2.6	2.6	2.6	2.6	2.6	2.6	2.6	2.6	2.5	2.5	2.5
	27	SHC	3.0	3.0	3.0	3.0	3.0	3.0	3.0	3.0	3.0	3.0	3.0	3.0	3.0	2.9	2.9
	29	SHC	3.4	3.4	3.4	3.4	3.4	3.4	3.4	3.4	3.4	3.4	3.4	3.4	3.4	3.3	3.3
	31	SHC	3.8	3.8	3.8	3.8	3.8	3.8	3.8	3.8	3.8	3.8	3.8	3.8	3.8	3.7	3.7
22		TC	5.4	5.4	5.4	5.4	5.4	5.4	5.4	5.4	5.4	5.4	5.4	5.3	5.1	5.0	4.9
	25	SHC	2.4	2.4	2.4	2.4	2.4	2.4	2.4	2.4	2.4	2.4	2.4	2.4	2.3	2.2	2.2
	27	SHC	2.8	2.8	2.8	2.8	2.8	2.8	2.8	2.8	2.8	2.8	2.8	2.8	2.7	2.7	2.6
	29	SHC	3.2	3.2	3.2	3.2	3.2	3.2	3.2	3.2	3.2	3.2	3.2	3.2	3.1	3.1	3.0
	31	SHC	3.7	3.7	3.7	3.7	3.7	3.7	3.7	3.7	3.7	3.7	3.7	3.6	3.6	3.5	3.5
23		TC	5.7	5.7	5.7	5.7	5.7	5.7	5.7	5.7	5.7	5.7	5.5	5.4	5.2	5.1	5.0
	25	SHC	2.2	2.2	2.2	2.2	2.2	2.2	2.2	2.2	2.2	2.2	2.2	2.1	2.1	2.0	2.0
	27	SHC	2.7	2.7	2.7	2.7	2.7	2.7	2.7	2.7	2.7	2.7	2.6	2.5	2.5	2.4	2.4
	29	SHC	3.1	3.1	3.1	3.1	3.1	3.1	3.1	3.1	3.1	3.1	3.0	2.9	2.9	2.8	2.8
	31	SHC	3.5	3.5	3.5	3.5	3.5	3.5	3.5	3.5	3.5	3.5	3.4	3.4	3.3	3.3	3.2

3. Cooling Capacity of Indoor Unit

● S-56MM1E5

Power supply : 220/230/240V 1phase-50,60Hz TC : Total Cooling Capacity (kW) SHC : Sensible Heat Capacity (kW)

This data is when the indoor unit connects with 16HP outdoor unit.

RATING CAPACITY:		5.6 kW	AIR FLOW RATE: 12.5 m³/min														
EVAPORATOR			CONDENSER														
AIR INTAKE. TEMP			AMBIENT TEMP. (°C)														
W.B.	D.B.		15	17	19	21	23	25	27	29	31	33	35	37	39	41	43
14		TC	3.7	3.7	3.7	3.7	3.7	3.7	3.7	3.7	3.7	3.7	3.7	3.7	3.7	3.7	3.7
	21	SHC	3.3	3.3	3.3	3.3	3.3	3.3	3.3	3.3	3.3	3.3	3.3	3.3	3.3	3.3	3.3
	23	SHC	3.7	3.7	3.7	3.7	3.7	3.7	3.7	3.7	3.7	3.7	3.7	3.7	3.7	3.7	3.7
	25	SHC	3.7	3.7	3.7	3.7	3.7	3.7	3.7	3.7	3.7	3.7	3.7	3.7	3.7	3.7	3.7
	27	SHC	3.7	3.7	3.7	3.7	3.7	3.7	3.7	3.7	3.7	3.7	3.7	3.7	3.7	3.7	3.7
15		TC	4.1	4.1	4.1	4.1	4.1	4.1	4.1	4.1	4.1	4.1	4.1	4.1	4.1	4.1	4.1
	21	SHC	3.1	3.1	3.1	3.1	3.1	3.1	3.1	3.1	3.1	3.1	3.1	3.1	3.1	3.1	3.1
	23	SHC	3.6	3.6	3.6	3.6	3.6	3.6	3.6	3.6	3.6	3.6	3.6	3.6	3.6	3.6	3.6
	25	SHC	4.1	4.1	4.1	4.1	4.1	4.1	4.1	4.1	4.1	4.1	4.1	4.1	4.1	4.1	4.1
	27	SHC	4.1	4.1	4.1	4.1	4.1	4.1	4.1	4.1	4.1	4.1	4.1	4.1	4.1	4.1	4.1
16		TC	4.5	4.5	4.5	4.5	4.5	4.5	4.5	4.5	4.5	4.5	4.5	4.5	4.5	4.5	4.5
	21	SHC	3.0	3.0	3.0	3.0	3.0	3.0	3.0	3.0	3.0	3.0	3.0	3.0	3.0	3.0	3.0
	23	SHC	3.5	3.5	3.5	3.5	3.5	3.5	3.5	3.5	3.5	3.5	3.5	3.5	3.5	3.5	3.5
	25	SHC	4.0	4.0	4.0	4.0	4.0	4.0	4.0	4.0	4.0	4.0	4.0	4.0	4.0	4.0	4.0
	27	SHC	4.4	4.4	4.4	4.4	4.4	4.4	4.4	4.4	4.4	4.4	4.4	4.4	4.4	4.4	4.4
	29	SHC	4.5	4.5	4.5	4.5	4.5	4.5	4.5	4.5	4.5	4.5	4.5	4.5	4.5	4.5	4.5
17		TC	4.9	4.9	4.9	4.9	4.9	4.9	4.9	4.9	4.9	4.9	4.9	4.9	4.9	4.9	4.9
	21	SHC	2.9	2.9	2.9	2.9	2.9	2.9	2.9	2.9	2.9	2.9	2.9	2.9	2.9	2.9	2.9
	23	SHC	3.3	3.3	3.3	3.3	3.3	3.3	3.3	3.3	3.3	3.3	3.3	3.3	3.3	3.3	3.3
	25	SHC	3.8	3.8	3.8	3.8	3.8	3.8	3.8	3.8	3.8	3.8	3.8	3.8	3.8	3.8	3.8
	27	SHC	4.3	4.3	4.3	4.3	4.3	4.3	4.3	4.3	4.3	4.3	4.3	4.3	4.3	4.3	4.3
	29	SHC	4.8	4.8	4.8	4.8	4.8	4.8	4.8	4.8	4.8	4.8	4.8	4.8	4.8	4.8	4.8
18		TC	5.2	5.2	5.2	5.2	5.2	5.2	5.2	5.2	5.2	5.2	5.2	5.2	5.2	5.2	5.2
	21	SHC	2.7	2.7	2.7	2.7	2.7	2.7	2.7	2.7	2.7	2.7	2.7	2.7	2.7	2.7	2.7
	23	SHC	3.2	3.2	3.2	3.2	3.2	3.2	3.2	3.2	3.2	3.2	3.2	3.2	3.2	3.2	3.2
	25	SHC	3.7	3.7	3.7	3.7	3.7	3.7	3.7	3.7	3.7	3.7	3.7	3.7	3.7	3.7	3.7
	27	SHC	4.1	4.1	4.1	4.1	4.1	4.1	4.1	4.1	4.1	4.1	4.1	4.1	4.1	4.1	4.1
	29	SHC	4.6	4.6	4.6	4.6	4.6	4.6	4.6	4.6	4.6	4.6	4.6	4.6	4.6	4.6	4.6
	31	SHC	5.1	5.1	5.1	5.1	5.1	5.1	5.1	5.1	5.1	5.1	5.1	5.1	5.1	5.1	5.1
19		TC	5.6	5.6	5.6	5.6	5.6	5.6	5.6	5.6	5.6	5.6	5.6	5.6	5.6	5.6	5.6
	21	SHC	2.5	2.5	2.5	2.5	2.5	2.5	2.5	2.5	2.5	2.5	2.5	2.5	2.5	2.5	2.5
	23	SHC	3.0	3.0	3.0	3.0	3.0	3.0	3.0	3.0	3.0	3.0	3.0	3.0	3.0	3.0	3.0
	25	SHC	3.5	3.5	3.5	3.5	3.5	3.5	3.5	3.5	3.5	3.5	3.5	3.5	3.5	3.5	3.5
	27	SHC	4.0	4.0	4.0	4.0	4.0	4.0	4.0	4.0	4.0	4.0	4.0	4.0	4.0	4.0	4.0
	29	SHC	4.5	4.5	4.5	4.5	4.5	4.5	4.5	4.5	4.5	4.5	4.5	4.5	4.5	4.5	4.5
	31	SHC	4.9	4.9	4.9	4.9	4.9	4.9	4.9	4.9	4.9	4.9	4.9	4.9	4.9	4.9	4.9
20		TC	6.0	6.0	6.0	6.0	6.0	6.0	6.0	6.0	6.0	6.0	6.0	6.0	6.0	5.9	5.9
	23	SHC	2.9	2.9	2.9	2.9	2.9	2.9	2.9	2.9	2.9	2.9	2.9	2.9	2.9	2.8	2.8
	25	SHC	3.3	3.3	3.3	3.3	3.3	3.3	3.3	3.3	3.3	3.3	3.3	3.3	3.3	3.3	3.3
	27	SHC	3.8	3.8	3.8	3.8	3.8	3.8	3.8	3.8	3.8	3.8	3.8	3.8	3.8	3.8	3.8
	29	SHC	4.3	4.3	4.3	4.3	4.3	4.3	4.3	4.3	4.3	4.3	4.3	4.3	4.3	4.3	4.2
	31	SHC	4.8	4.8	4.8	4.8	4.8	4.8	4.8	4.8	4.8	4.8	4.8	4.8	4.8	4.8	4.7
21		TC	6.3	6.3	6.3	6.3	6.3	6.3	6.3	6.3	6.3	6.3	6.3	6.3	6.3	6.1	6.0
	23	SHC	2.7	2.7	2.7	2.7	2.7	2.7	2.7	2.7	2.7	2.7	2.7	2.7	2.6	2.6	2.5
	25	SHC	3.1	3.1	3.1	3.1	3.1	3.1	3.1	3.1	3.1	3.1	3.1	3.1	3.1	3.0	3.0
	27	SHC	3.6	3.6	3.6	3.6	3.6	3.6	3.6	3.6	3.6	3.6	3.6	3.6	3.6	3.5	3.5
	29	SHC	4.1	4.1	4.1	4.1	4.1	4.1	4.1	4.1	4.1	4.1	4.1	4.1	4.1	4.0	4.0
	31	SHC	4.6	4.6	4.6	4.6	4.6	4.6	4.6	4.6	4.6	4.6	4.6	4.6	4.6	4.5	4.4
22		TC	6.7	6.7	6.7	6.7	6.7	6.7	6.7	6.7	6.7	6.7	6.7	6.6	6.4	6.2	6.1
	25	SHC	3.0	3.0	3.0	3.0	3.0	3.0	3.0	3.0	3.0	3.0	3.0	2.9	2.8	2.8	2.7
	27	SHC	3.4	3.4	3.4	3.4	3.4	3.4	3.4	3.4	3.4	3.4	3.4	3.4	3.3	3.2	3.2
	29	SHC	3.9	3.9	3.9	3.9	3.9	3.9	3.9	3.9	3.9	3.9	3.9	3.9	3.8	3.7	3.7
	31	SHC	4.4	4.4	4.4	4.4	4.4	4.4	4.4	4.4	4.4	4.4	4.4	4.3	4.3	4.2	4.2
23		TC	7.1	7.1	7.1	7.1	7.1	7.1	7.1	7.1	7.1	7.1	6.9	6.7	6.5	6.3	6.2
	25	SHC	2.8	2.8	2.8	2.8	2.8	2.8	2.8	2.8	2.8	2.8	2.7	2.6	2.5	2.5	2.4
	27	SHC	3.2	3.2	3.2	3.2	3.2	3.2	3.2	3.2	3.2	3.2	3.2	3.1	3.0	3.0	2.9
	29	SHC	3.7	3.7	3.7	3.7	3.7	3.7	3.7	3.7	3.7	3.7	3.6	3.6	3.5	3.4	3.4
	31	SHC	4.2	4.2	4.2	4.2	4.2	4.2	4.2	4.2	4.2	4.2	4.1	4.0	4.0	3.9	3.9

– MEMO –